CITY OF RIDGECREST

SGT. JOHN PINNEY MEMORIAL POOL

REPLACEMENT PROJECT

205 S WARNER ST, RIDGECREST, CA 93555

APPLICABLE CODES

CITY OF RIDGECREST MUNICIPAL CODE

PART 1	2022 BUILDING STANDARDS ADMINISTRATIVE CODE, TITLE 24 C.C.R.
PART 2	2022 CALIFORNIA BUILDING CODE (CBC), TITLE 24 C.C.R. (2022 INTERNATIONAL BUILDING CODE OF THE INTERNATIONAL CODE COUNCIL, WITH CALIFORNIA AMENDMENTS)
PART 3	2022 CALIFORNIA ELECTRICAL CODE (CEC), TITLE 24 C.C.R. (2022 NATIONAL ELECTRICAL CODE OF THE NATIONAL FIRE PROTECTION ASSOCIATION, NFPA.)
PART 4	2022 CALIFORNIA MECHANICAL CODE (CMC), TITLE 24 C.C.R. (2022 UNIFORM MECHANICAL CODE OF THE INTERNATIONAL ASSOCIATION OF PLUMBING AND MECHANICAL OFFICIALS, IAPMO.)
PART 5	2022 CALIFORNIA PLUMBING CODE (CPC), TITLE 24 C.C.R. (2018 UNIFORM PLUMBING CODE OF THE INTERNATIONAL ASSOCIATION OF PLUMBING AND MECHANICAL OFFICIALS, IAPMO.)
PART 6	2022 CALIFORNIA ENERGY CODE, TITLE 24 C.C.R.
PART 9	2022 CALIFORNIA FIR CODE, TITLE 24 C.C.R. (2022 INTERNATIONAL FIRE CODE OF THE INTERNATIONAL CODE COUNCIL)
PART 10	2022 CALIFORNIA EXISTING BUILDING CODE, TITLE 24 C.C.R. (2022 INTERNATIONAL EXISTING BUILDINGS CODE OF THE INTERNATIONAL CODE COUNCIL, WITH AMENDMENTS)
PART 11	2022 CALIFORNIA GREEN BUILDING STANDARDS COD (CALGREEN), TITLE 24 C.C.R.
PART 12	2022 CALIFORNIA REFERENCED STANDARDS, TITLE 24 C.C.R.
PART 19	C.C.R., PUBLIC SAFETY, STATE FIRE MARSHAL REGULATIONS

PARTIAL LIST OF APPLICABLE CODES

NFPA 13	AUTOMATIC SPRINKLER SYSTEMS	2022 EDITION
NFPA 14	STANDPIPE SYSTEMS (CA) AMENDED	2022 EDITION
NFPA 17	DRY CHEMICAL EXTINGUISHING SYSTEMS	2022 EDITION
NFPA 17A	WET CHEMICAL EXTINGUISHING SYSTEMS	2022 EDITION
NFPA 20	STATIONARY PUMPS	2022 EDITION
NFPA 24	PRIVATE FIRE MAINS	2022 EDITION
NFPA 72	NATIONAL FIRE ALARM CODE (CA) AMENDED	2022 EDITION
NFPA 80	FIRE DOOR AND OTHER OPENING PROTECTIVES	2022 EDITION
NFPA 253	CRITICAL RADIANT FLUX OF FLOOR COVERING SYSTEMS	2022 EDITION
NFPA 2001	CLEAN AGENT FIRE EXTINGUISHING SYSTEMS (CALIFORNIA AMENDED)	2022 EDITION

REFERENCED CODE SECTION FOR NFPA STANDRDS - 2022 CBC (SFM) CHAPTER 35, SEE CHAPTER 35 FOR STATE OF CALIFORNIA AMENDMENTS TO NFPA STANDARDS

GENERAL SCOPE OF WORK

THE PROJECT SCOPE CONSISTS OF THE FOLLOWING WORK:

1. (1) NEW COMMUNITY POOL BUILDING.
2. (1) NEW REST ROOM / EQUIPMENT STORAGE BUILDING.
3. (1) NEW BLEACHER SEATING AREA W/ ROOF STUCTURE.
4. (1) NEW 25-YARD x 25-METER COMPETITION SWIMMING POOL AND RELATED DECK & DRAINAGE.
5. (1) NEW 25'-0" x 75'-0" THERAPY POOL AND RELATED DECK & DRAINAGE.
6. (1) NEW 40'-0" x 92'-2" RECREATION POOL AND RELATED DECK & DRAINAGE.
7. (2) NEW OUTDOOR SHOWER AREAS.
8. (1) NEW TRELLACED ROOF STRUCTURES.
9. (2) NEW PARKING LOTS.
10. (2) NEW TRASH ENCLOSURES.
11. (1) NEW 24'-0" WIDE THROUGH ROAD.
12. (1) NEW PEDESTRIAN CROSSWALK.
13. (2) NEW SET OF EXTERIOR STAIRS.
14. (2) NEW ACCESSIBLE RAMP.
15. (2) NEW HORSE SHOE COURTS LOCATED ADJACENT TO EXISTING RIDGECREST COMMUNITY BUILDING SENIOR CITIZENS CENTER.
16. NEW LANDSCAPE / HARDSCAPE LOCATED ADJACENT TO EXISTING RIDGECREST COMMUNITY BUILDING SENIOR CITIZENS CENTER.
18. NEW PERIMETER FENCING AND RELATED LANDSCAPE.

DEFERRED SUBMITTALS

ITEMS LISTED BELOW TO BE DEFERRED SUBMITTALS:

1. FIRE SPRINKLER PLANS PER 2022 NFPA 13
2. FIRE ALARM PLANS PER 2022 NFPA 72
3. PV SYSTEM

SHEET INDEX

GENERAL INFORMATION (6 SHEETS)

T0.01	TITLE SHEET
T0.02	GENERAL NOTES
T0.03	GREEN CODE
T0.04	GREEN CODE
T0.05	GREEN CODE
T0.06	NONRESIDENTIAL COMMISSIONING FORMS

CIVIL (33 SHEETS)

C1.01	COVER SHEET
C1.02	GENERAL NOTES
C2.01	EROSION CONTROL PLAN
C2.02	EROSION CONTROL DETAILS
C3.01	GRADING AND PAVING PLAN
C3.01A1	GRADING AND PAVING PLAN BID ALT 1
C3.01A2	GRADING AND PAVING PLAN BID ALT 2
C3.01A4	GRADING AND PAVING PLAN BID ALT 4
C3.01A6	GRADING AND PAVING PLAN BID ALT 6
C3.02	GRADING AND PAVING PLAN
C3.02A1	GRADING AND PAVING PLAN BID ALT 1
C3.02A2	GRADING AND PAVING PLAN BID ALT 2
C3.02A4	GRADING AND PAVING PLAN BID ALT 4
C3.02A6	GRADING AND PAVING PLAN BID ALT 6
C3.02A7	GRADING AND PAVING PLAN BID ALT 7
C3.03	GRADING AND PAVING PLAN
C3.03A2	GRADING AND PAVING PLAN BID ALT 2
C3.03A4	GRADING AND PAVING PLAN BID ALT 4
C3.03A6	GRADING AND PAVING PLAN BID ALT 6
C3.03A7	GRADING AND PAVING PLAN BID ALT 7
C3.04	ENLARGED DETAILS
C3.04A1	ENLARGED DETAILS BID ALT 1
C3.04A2	ENLARGED DETAILS BID ALT 2
C3.05	SITE SECTIONS
C3.05A2	SITE SECTIONS BID ALT 2
C3.05A4	SITE SECTIONS BID ALT 4
C3.06	GRADING DETAILS
C3.07	GRADING DETAILS
C4.01	WET UTILITY PLAN
C4.01A4	WET UTILITY PLAN ALT 4
C4.02	WET UTILITY DETAILS
C4.03	WET UTILITY DETAILS
C5.01	HORIZONTAL CONTROL PLAN

LANDSCAPE (25 SHEETS)

L1.01	LANDSCAPE CONSTRUCTION PLAN
L1.01A2	LANDSCAPE CONSTRUCTION PLAN ALT 2
L1.01A6	LANDSCAPE CONSTRUCTION PLAN ALT 6
L1.01A7	LANDSCAPE CONSTRUCTION PLAN ALT 7
L1.02	LANDSCAPE CONSTRUCITON PLAN ENLARGEMENTS
L1.02A2	LANDSCAPE CONSTRUCTION PLAN ENLARGEMENTS ALT 2
L1.02A6	LANDSCAPE CONSTRUCTION PLAN ENLARGEMENTS ALT 6
L1.02A7	LANDSCAPE CONSTRUCTION PLAN ENLARGEMENTS ALT 7
L1.03	LANDSCAPE CONSTRUCTION DETAILS
L1.03A2	LANDSCAPE CONSTRUCTION DETAILS ALT 2
L2.01	PLANTING PLAN
L2.01A2	PLANTING PLAN ALT 2
L2.01A6	PLANTING PLAN ALT 6
L2.01A7	PLANTING PLAN ALT 7
L3.01	IRRIGATION PLAN
L3.01A2	IRRIGATION PLAN ALT 2
L3.01A6	IRRIGATION PLAN ALT 6
L3.01A7	IRRIGATION PLAN ALT 7
L4.01	LANDSCAPE DETAILS
L4.01A2	LANDSCAPE DETAILS ALT 2
L4.01A7	LANDSCAPE DETAILS ALT 7
L4.02	LANDSCAPE DETAILS
L4.02A2	LANDSCAPE DETAILS ALT 2
L4.02A6	LANDSCAPE DETAILS ALT 6
L4.02A7	LANDSCAPE DETAILS ALT 7

ARCHITECTURAL (76 SHEETS)

A1.01	OVERALL SITE PLAN
A1.01A1	OVERALL SITE PLAN ALT 1
A1.01A2	OVERALL SITE PLAN ALT 2
A1.01A3	OVERALL SITE PLAN ALT 3
A1.01A4	OVERALL SITE PLAN ALT 4
A1.01A6	OVERALL SITE PLAN ALT 6
A1.01A7	OVERALL SITE PLAN ALT 7
A1.02	LIFE SAFETY SITE PLAN
A1.03	FIRE ACCESS SITE PLAN
A1.04	ENLARGED SITE PLANS
A1.04A2	ENLARGED SITE PLANS ALT 2
A1.05	ENLARGED SITE PLANS
A1.05A2	ENLARGED SITE PLANS ALT 2
A1.05A3	ENLARGED SITE PLANS ALT 3
A1.05A6	ENLARGED SITE PLANS ALT 6
A1.05A7	ENLARGED SITE PLANS ALT 7
A1.06	ENLARGED SITE PLANS
A1.07	ENLARGED SITE PLANS
A1.08	SITE ELEVATIONS
A1.08A6	SITE ELEVATIONS ALT 6
A1.09	SITE SECTIONS
A1.09A2	SITE SECTIONS ALT 2
A1.09A3	SITE SECTIONS ALT 3
A1.10	SITE DETAILS
A1.11	SITE DETAILS
A1.11A4	SITE DETAILS ALT 4
A1.11A6	SITE DETAILS ALT 6
A2.01	OVERALL FLOOR PLAN
A2.01A5	OVERALL FLOOR PLAN ALT 5
A2.01A6	OVERALL FLOOR PLAN ALT 6
A2.02	LIFE SAFETY FLOOR PLAN
A2.03	OVERALL REFLECTED CEILING PLAN
A2.03A6	OVERALL REFLECTED CEILING PLAN ALT 6
A2.04	ROOF PLAN
A2.04A6	ROOF PLAN ALT 6
A2.11	DETACHED BUILDING PLANS
A3.01	EXTERIOR ELEVATIONS
A3.01A6	EXTERIOR ELEVATIONS ALT 6
A3.11	EXTERIOR ELEVATIONS
A4.01	BUILDING SECTIONS
A4.01A6	BUILDING SECTIONS ALT 6
A4.02	BUILDING SECTIONS
A4.02A6	BUILDING SECTIONS ALT 6
A4.11	BUILDING SECTIONS
A5.01	ENLARGED FLOOR PLAN
A5.01A5	ENLARGED FLOOR PLAN ALT 5
A5.02	ENLARGED FLOOR PLAN
A5.02A5	ENLARGED FLOOR PLAN ALT 5
A5.02A6	ENLARGED FLOOR PLAN ALT 6
A5.03	ENLARGED REFLECTED CEILING PLAN
A5.04	ENLARGED REFLECTED CEILING PLAN
A5.04A6	ENLARGED REFLECTED CEILING PLAN ALT 6
A5.05	ENLARGED RESTROOM FLOOR PLANS AND ELEVATIONS
A5.05A5	ENLARGED RESTROOM FLOOR PLANS AND ELEVATIONS ALT 5
A5.06	ENLARGED RESTROOM / SHOWERS FLOOR PLANS AND ELEVATIONS
A5.06A5	ENLARGED RESTROOM / SHOWERS FLOOR PLANS AND ELEVATIONS ALT 5
A5.07	ENLARGED RESTROOM / SHOWER PLANS AND ELEVATIONS
A5.07A5	ENLARGED RESTROOM / SHOWER PLANS AND ELEVATIONS ALT 5
A5.11	INTERIOR ELEVATIONS
A5.12	INTERIOR ELEVATIONS
A5.12A5	INTERIOR ELEVATIONS ALT 5
A6.01	WALL SECTIONS
A6.01A6	WALL SECTIONS ALT 6
A7.01	DOOR, WINDOW & INTERIOR FINISH SCHEDULE
A7.01A6	DOOR, WINDOW & INTERIOR FINISH SCHEDULE ALT 6
A8.01	WALL TYPES AND FIRE RATING DETAILS
A8.01A5	WALL TYPES AND FIRE RATING DETAILS
A8.02	DOOR AND WINDOW DETAILS
A8.02A6	DOOR AND WINDOW DETAILS ALT 6
A8.03	TYPICAL CEILING DETAILS
A8.04	TYPICAL ROOF DETAILS
A8.05	TYPICAL ROOF DETAILS
A8.06	ACCESSIBILTY AND SIGNAGE DETAILS
A8.07	RECEPTION DESK PLAN & DETAILS
A8.08	CABINET DETAILS
A8.09	MISCELLANEOUS DETAILS

AQUATIC (33 SHEETS)

DP-1	DECK PLAN
DP-1A3	DECK PLAN ALT 3
DP-1A6	DECK PLAN ALT 6
DP-1A7	DECK PLAN ALT 7
CP-1	COMPETITION POOL LAYOUT PLAN
CP-2.1	OVERALL AREA PIPING PLAN
CP-2.2	COMPETITION POOL PIPING PLAN
CP-3	OVERALL AREA UNDERWATER LIGHTING / TIMING PLAN
CP-4	COMPETITION POOL SECTIONS
CP-5	COMPETITION POOL DETAILS
CP-6	COMPETITION POOL DETAILS
CP-7	COMPETITION POOL DETAILS
CP-8	COMPETITION POOL DETAILS
CP-9	COMPETITION POOL DETAILS
CP-10	COMPETITION POOL DETAILS
CP-11	COMPETITION POOL DETAILS
AP-1	ACTIVITY POOL LAYOUT PLAN
AP-2	ACTIVITY POOL PIPING PLAN
AP-3	ACTIVITY POOL SECTIONS
AP-4	ACTIVITY POOL DETAILS
AP-5	ACTIVITY POOL DETAILS
AP-6	ACTIVITY POOL DETAILS
IP-1	INSTRUCTIONAL POOL LAYOUT PLAN
IP-2	INSTRUCTIONAL POOL PIPING PLAN
IP-3	INSTRUCTIONAL POOL SECTIONS
MR-1	MECHANICAL ROOM DETAILS
MR-2	DETAILS
MR-3	DETAILS
MR-4	DETAILS
MR-5	DETAILS
MR-6	DETAILS
MR-7	DETAILS
MR-8	DETAILS

STRUCTURAL (27 SHEETS)

S0.01	GENERAL NOTES
S0.02	GENERAL NOTES
S0.03	GENERAL NOTES
S0.04	TESTING & INSPECTION PROGRAMS
S0.05	TESTING & INSPECTION PROGRAMS
S0.06	TESTING & INSPECTION PROGRAMS
S0.10	TYPICAL DETAILS
S0.20	TYPICAL DETAILS
S0.30	TYPICAL DETAILS
S0.40	TYPICAL DETAILS
S1.00	COMMUNITY BUILDING FOUNDATION PLAN
S1.00A5	ALTERNATE COMMUNITY BUILDING FOUNDATION PLAN
S1.00A6	ALTERNATE COMMUNITY BUILDING FOUNDATION PLAN
S1.10	COMMUNITY BUILDING ROOF FRAMING PLAN
S1.10A6	ALTERNATE COMMUNITY BUILDING ROOF FRAMING PLAN
S1.20	BATHROOMS / POOL STORAGE BUILDING STRUCTURAL PLANS
S1.30	COVERED COLONADE STRUCTURAL PLANS & SECTIONS
S1.40	COVERED BLEACHERS STRUCTURAL PLANS & ELEVATIONS
S2.00	FOUNDATION DETAILS
S2.10	FOUNDATION DETAILS
S3.00	FRAMING DETAILS
S3.00A6	ALTERNATE FRAMING DETAILS
S3.10	FRAMING DETAILS
S3.20	FRAMING DETAILS
S3.20A6	ALTERNATE FRAMING DETAILS
S3.30	FRAMING DETAILS
S3.30A6	ALTERNATE FRAMING DETAILS

MECHANICAL (32 SHEETS)

M0.01	MECHANICAL FRONT SHEET
M0.02	MECHANICAL SYMBOLS AND ABBREVIATIONS
M0.03	MECHANICAL SCHEDULES
M0.03A6	MECHANICAL SCHEDULES ALT 6
M0.04	MECHANICAL SCHEDULES
M0.04A6	MECHANICAL SCHEDULES ALT 6
M0.04A7	MECHANICAL SCHEDULES ALT 7
M0.05	MECHANICAL SCHEDULES
M0.05A6	MECHANICAL SCHEDULES ALT 6
M2.01	MECHANICAL COMMUNITY BUILDING FLOOR PLAN
M2.01A6	MECHANICAL COMMUNITY BUILDING FLOOR PLAN ALT 6
M2.02	MECHANICAL EQUIPMENT STORAGE FLOOR PLAN
M2.03	MECHANICAL COMMUNITY BUILDING ROOF PLAN
M2.03A6	MECHANICAL COMMUNITY BUILDING ROOF PLAN ALT 6
M2.03A7	MECHANICAL COMMUNITY BUILDING ROOF PLAN ALT 6
M2.04	MECHANICAL EQUIPMENT STORAGE ROOF PLAN
M6.01	MECHANICAL DETAILS
M6.02	MECHANICAL DETAILS
M6.03	MECHANICAL DETAILS
M6.04	MECHANICAL DETAILS
M6.05	MECHANICAL PIPING DIAGRAMS
M6.05A6	MECHANICAL PIPING DIAGRAMS ALT 6
M6.06	MECHANICAL PIPING DIAGRAMS
M6.07	MECHANICAL WIRING DIAGRAMS
M6.07A6	MECHANICAL WIRING DIAGRAMS ALT 6
M6.08	MECHANICAL WIRING DIAGRAMS
M7.01	MECHANICAL T-24 FORMS
M7.01A6	MECHANICAL T-24 FORMS ALT 6
M7.02	MECHANICAL T-24 FORMS
M7.02A6	MECHANICAL T-24 FORMS ALT 6
M7.03	MECHANICAL T-24 FORMS
M7.03A6	MECHANICAL T-24 FORMS ALT 6

ELECTRICAL (52 SHEETS)

E0.01	ELECTRICAL FRONT SHEET
E0.02	ELECTRICAL SINGLE LINE DIAGRAM
E0.02A7	ELECTRICAL SINGLE LINE DIAGRAM ALT 7
E0.03	ELECTRICAL LIGHTING FIXTURE SCHEDULE
E0.04	ELECTRICAL PANEL SCHEDULE
E0.04A3	ELECTRICAL PANEL SCHEDULE ALT 3
E0.04A6	ELECTRICAL PANEL SCHEDULE ALT 6
E0.04A7	ELECTRICAL PANEL SCHEDULE ALT 7
E1.01	ELECTRICAL SITE POWER PLAN
E1.01A6	ELECTRICAL SITE POWER PLAN ALT 6
E1.01A7	ELECTRICAL SITE POWER PLAN ALT 7
E1.01A	ELECTRICAL SITE UTILITY POWER PLAN
E1.01B	ELECTRICAL SCE PLANS
E1.02	ELECTRICAL SITE LIGHTING PLAN
E1.02A3	ELECTRICAL SITE LIGHTING PLAN ALT 3
E1.02A6	ELECTRICAL SITE LIGHTING PLAN ALT 6
E1.02A7	ELECTRICAL SITE LIGHTING PLAN ALT 7
E2.01	ELECTRICAL COMMUNITY BUILDING POWER FLOOR PLAN
E2.01A6	ELECTRICAL COMMUNITY BUILDING POWER FLOOR PLAN ALT 6
E2.02	ELECTRICAL EQUIPMENT STORAGE POWER FLOOR PLAN
E2.03	ELECTRICAL COMMUNITY BUILDING ROOF POWER PLAN
E2.03A6	ELECTRICAL COMMUNITY BUILDING ROOF POWER PLAN ALT 6
E2.04	ELECTRICAL EQUIPMENT STORAGE LIGHTING PLAN
E2.05	ELECTRICAL COMMUNITY BUILDING LIGHTING PLAN
E2.05A6	ELECTRICAL COMMUNITY BUILDING LIGHTING PLAN ALT 6
E2.06	ELECTRICAL EQUIPMENT STORAGE LIGHTING PLAN
E2.07	ELECTRICAL LIGHTING CONTROL PLAN
E2.08	ELECTRIAL LIGHTING CONTROL DIAGRAMS
E3.01	ELECTRICAL SITE LIGHTING PHOTOMETRICS
E3.01A3	ELECTRICAL SITE LIGHTING PHOTOMETRICS ALT 3
E3.01A6	ELECTRICAL SITE LIGHTING PHOTOMETRICS ALT 6
E3.01A7	ELECTRICAL SITE LIGHTING PHOTOMETRICS ALT 7
E3.02	ELECTRICAL SITE EMERGENCY LIGHTING PHOTOMETRICS
E3.02A6	ELECTRICAL SITE EMERGENCY LIGHTING PHOTOMETRICS ALT 6
E3.02A7	ELECTRICAL SITE EMERGENCY LIGHTING PHOTOMETRICS ALT 7
E3.03	ELECTRICAL COMMUNITY BUILDING EMERGENCY PHOTOMETRICS
E3.03A6	ELECTRICAL COMMUNITY BUILDING EMERGENCY PHOTOMETRICS ALT 6
E3.04	ELECTRICAL STORAGE BUILDING EMERGENCY PHOTOMETRICS
E6.01	ELECTRICAL DETAILS-1
E6.02	ELECTRICAL DETAILS-2
E7.01	ELECTRICAL T-24 FORMS-INDOOR (COMMUNITY BUILDING)
E7.01A6	ELECTRICAL T-24 FORMS-INDOOR (COMMUNITY BUILDING) ALT 6
E7.02	ELECTRICAL T-24 FORMS-OUTDOOR (COMMUNITY BUILDING)
E7.02A3	ELECTRICAL T-24 FORMS-OUTDOOR (COMMUNITY BUILDING) ALT 3
E7.02A6	ELECTRICAL T-24 FORMS-OUTDOOR (COMMUNITY BUILDING) ALT 6
E7.02A7	ELECTRICAL T-24 FORMS-OUTDOOR (COMMUNITY BUILDING) ALT 7
E7.03	ELECTRICAL T-24 FORMS-INDOOR (STORAGE BUILDING)
E7.04	ELECTRICAL T-24 FORMS-OUTDOOR (STORAGE BUILDING)
E7.05	ELECTRICAL T-24 FORMS - POWER DISTRIBUTION
E8.01	SPORTS LIGHTING DRAWINGS
E8.02	SPORTS LIGHTING DRAWINGS
E8.03	SPORTS LIGHTING DRAWINGS

PLUMBING (21 SHEETS)

P0.01	PLUMBING FRONT SHEET
P0.02	PLUMBING SCHEDULE
P0.02A7	PLUMBING SCHEDULE ALT 7
P1.01	PLUMBING SITE PLAN
P1.01A6	PLUMBING SITE PLAN ALT 6
P1.01A7	PLUMBING SITE PLAN ALT 7
P2.01	PLUMBING COMMUNITY BUILDING COLD AND HOT WATER FLOOR PLAN
P2.01A6	PLUMBING COMMUNITY BUILDING COLD AND HOT WATER FLOOR PLAN ALT6
P2.02	PLUMBING EQUIPMENT STORAGE COLD AND HOT WATER FLOOR PLAN
P2.03	PLUMBING COMMUNITY BUILDING WASTE AND VENT FLOOR PLAN
P2.03A6	PLUMBING COMMUNITY BUILDING WASTE AND VENT FLOOR PLAN ALT 6
P2.04	PLUMBING EQUIPMENT STORAGE WASTE AND VENT FLOOR PLAN
P2.05	PLUMBING COMMUNITY BUILDING ROOF PLAN
P2.05A6	PLUMBING COMMUNITY BUILDING ROOF PLAN ALT 6
P2.06	PLUMBING EQUIPMENT STORAGE ROOF PLAN
P3.01	PLUMBING WATER AND GAS RISER
P3.01A7	PLUMBING WATER AND GAS RISER ALT 7
P3.02	PLUMBING WASTE AND VENT RISER
P3.02A7	PLUMBING WASTE AND VENT RISER ALT 7
P6.01	PLUMBING DETAILS
P6.02	PLUMBING DETAILS

LOW VOLTAGE (13 SHEETS)

LV0.01	LOW VOLTAGE FRONT SHEET
LV1.01	LOW VOLTAGE SITE PLAN
LV1.01A6	LOW VOLTAGE SITE PLAN ALT 6
LV1.01A7	LOW VOLTAGE SITE PLAN ALT 7
LV2.01	LOW VOLTAGE COMMUNITY BUILDING FLOOR PLAN
LV2.01A6	LOW VOLTAGE COMMUNITY BUILDING FLOOR PLAN ALT 6
LV2.01A7	LOW VOLTAGE COMMUNITY BUILDING FLOOR PLAN ALT 7
LV2.02	LOW VOLTAGE EQUIPMENT STORAGE FLOOR PLAN
LV2.02A6	LOW VOLTAGE EQUIPMENT STORAGE FLOOR PLAN ALT 6
LV5.01	LOW VOLTAGE RACK ELEVATION DETAILS
LV5.02	LOW VOLTAGE DETAILS
LV5.03	LOW VOLTAGE DETAILS
LV5.04	LOW VOLTAGE DETAILS

TRAFFIC SIGNAL (3 SHEETS)

TS.01	PEDESTRIAN HYBRID SIGNAL (HAWK) PLAN
TS.02	PEDESTRIAN HYBRID SIGNAL (HAWK) PLAN
TS.03	2023 APPLICABLE CALTRANS STANDARD PLANS

TOTAL SHEETS: 321

SIGNATURE OF PLANS AND SPECS

THESE DRAWINGS AND/OR SPECIFICATIONS AND/OR CALCULATIONS FOR THE ITEMS DESIGNATED WITH A ////// HAVE BEEN PREPARED BY OTHER DESIGN PROFESSIONALS OR CONSULTANTS WHO ARE LICENSED AND/OR AUTHORIZED TO PREPARE SUCH DRAWINGS IN THIS STATE. THESE DOCUMENTS HAVE BEEN EXAMINED BY ME FOR DESIGN INTENT AND HAVE BEEN FOUND TO MEET THE APPROPRIATE REQUIREMENTS OF TITLE 24, CALIFORNIA CODE OF REGULATIONS AND THE PROJECT SPECIFICATIONS PREPARED BY ME.

THE ITEMS DESIGNATED WITH A ////////// HAVE BEEN COORDINATED WITH MY PLANS AND SPECIFICATIONS AND ARE ACCEPTABLE FOR INCORPORATION INTO THE CONSTRUCTION OF THIS PROJECT FOR WHICH I AM THE INDIVIDUAL DESIGNATED TO BE IN GENERAL RESPONSIBLE CHARGE (OR FOR WHICH I HAVE BEEN DELEGATED RESPONSIBILITY FOR THIS PORTION OF THE WORK.)

THE STATEMENT OF GENERAL CONFORMANCE "SHALL NOT BE CONSTRUED AS RELIEVING ME OF MY RIGHTS, DUTIES, AND RESPONSIBILITIES UNDER SECTIONS 17302 AND 81138 OF THE EDUCATION CODE AND SECTIONS 4-336, 4-341 AND 4-344" OF TITLE 24, PART 1. (TITLE 24, PART 1, SECTION 4-317(b))

I FIND THAT:

- [x] ALL DRAWINGS OR SHEETS LISTED ON THE COVER OR INDEX SHEET
- [ ] THIS DRAWING OR PAGE
- [x] IS/ARE IN GENERAL CONFORMANCE WITH THE PROJECT DESIGN INTENT, AND
- [x] HAS/HAVE BEEN COORDINATED WITH THE PROJECT PLANS AND SPECIFICATIONS

Scott F. Gaudineer — 07/14/2025

Scott F. Gaudineer — Date

C-14211 — 08/31/2025

License Number — Expiration Date

LANDSCAPE ARCHITECT
OASIS
3427 Miguelito Court
San Luis Obispo, CA 93401
TEL: (805) 546-0525
Email: michael@oasisassoc.com
Contact: Michael Cripe

PLUMBING ENGINEER
BUDLONG
700 North Glendale Ave, Suite 520
Glendale, CA 91203
TEL: (818) 696-8154
Email: jorge@budlong.com
Contact: Jorge Avila

ELECTRICAL ENGINEER
BUDLONG
700 North Glendale Ave, Suite 520
Glendale, CA 91203
TEL: (818) 696-8154
Email: manan@budlong.com
Contact: Manan Christian

MECHANICAL ENGINEER
BUDLONG
700 North Glendale Ave, Suite 520
Glendale, CA 91203
TEL: (818) 572-3347
Email: saeid@budlong.com
Contact: Saeid Hashemi

STRUCTURAL ENGINEER
RGSE
2720 Cochran Street, Suite 8B
Simi Valley, CA 93065
TEL: (805) 522-3379
Email: ramong@rgseinc.com
Contact: Ramon Garcia

CIVIL ENGINEER
ECG
25115 Avenue Stanford, Suite A320
Santa Clarita, CA 91355
TEL: (661) 600-9367
Email: josiah.jenison@ecgcivil.com
Contact: Josiah Jenison

AQUATIC DESIGNER
ADG
2226 Faraday Avenue,
Carlsbad, CA 2008
TEL: (760) 444-8303
Email: dberkshire@aquaticdesigngroup.com
Contact: Dennis Berkshire

ARCHITECT
FLEWELLING & MOODY
99 South Lake Avenue, Suite 300
Pasadena, CA 91101
TEL: (323) 543-8300
Email: sgaudineer@flewelling-moody.com
Contact: Scott Gaudineer

OWNER
CITY OF RIDGECREST
100 West California Avenue
Ridgecrest, CA 93555
TEL: (760) 499-5000
Email: rstrand@ridgecrest-ca.gov
Contact: Ronald Strand

AGENCY

FLEWELLING & MOODY
architecture planning interiors

HEADQUARTERS OFFICE:
99 S. Lake Avenue, Suite 300
Pasadena, CA 91101
Phone: 323.543.8300
E-Mail: fm-pasadena@flewelling-moody.com

ANTELOPE VALLEY OFFICE:
1035 West Lancaster Boulevard
Lancaster, California 93534
Phone: 661.949.0771
E-Mail: fm-lancaster@flewelling-moody.com

An Employee Owned Corporation

ARCHITECT

LICENSED ARCHITECT — SCOTT F. GAUDINEER — C-14211 — 08/31/2025 — STATE OF CALIFORNIA

CONSULTANT

Drawn by: Author
Check by: Checker
Revisions

No.	Date	Description
1	08/27/2025	BID ALTERNATE

All dimensions must be checked at the job by the contractor who accepts full responsibility for their accuracy under the contract. These plans & the specifications in connection therewith have been prepared for a specific site. Any and all responsibility for their use in whole or in part on any other site is hereby declaimed by Flewelling & Moody.

CITY OF RIDGECREST

SGT. JOHN PINNEY MEMORIAL POOL REPLACEMENT PROJECT

205 S WARNER ST, RIDGECREST, CA 93555

Drawing Title

COVER SHEET

Job No. 3055-0100

Date 12/20/2024

Sheet No. **T0.01**

ABBREVIATIONS

@	AT
A/C	AIR CONDITIONING
A/S	AUTOMATIC SPRINKLERS
AB	ANCHOR BOLT
ABV	ABOVE
AC	ASPHALT CONCRETE
ACC	ACCESSIBLE
ACP	ACOUSTICAL CEILING PANEL
ACT	ACOUSTICAL CEILING TILE
AD	AREA DRAIN
ADA	AMERICANS W/ DISABILITIES ACT
ADDL	ADDITIONAL
ADDM	ADDENDUM
ADJ	ADJACENT
ADJ	ADJUSTABLE / ADJACENT
ADMIN	ADMINISTRATION
AFD	AUTOMATIC FIRE DAMPER
AFF	ABOVE FINISHED FLOOR
AFS	ABOVE FINISHED SURFACE
AGG	AGGREGATE
AHU	AIR HANDLING UNIT
ALT	ALTERNATE
ALUM	ALUMINUM
ANOD	CLEAR ANODIZED
APPROX	APPROXIMATE
ARCH	ARCHITECT(URAL)
AS	ACID STAIN
ASTM	AMERICAN SOCIETY FOR TESTING MATERIALS
ATFD	ACCORDION TYPE FIRE DOOR
AUTO	AUTOMATIC
AVG	AVERAGE
BD	BOARD
BEL	BELOW
BG	BELOW GRADE
BITUM	BITUMIN(OUS)
BL	BASELINE
BLDG	BUILDING
BLKG	BLOCKING
BM	BEAM
BOT	BOTTOM
BS	BOTH SIDES
BSMT	BASEMENT
BTWN	BETWEEN
BUR	BUILT-UP ROOFING
C TO C	CENTER TO CENTER
CAB	CABINET
CB	CATCH BASIN
CC	CONCRETE
CEM	CEMENT
CER	CERAMIC
CF	CURB FACE
CG	CORNER GUARD
CH	COAT HOOK
CHBD	CHALKBOARD
CHFR	CHAMFER
CI	CAST IRON
CIP	CAST IN PLACE
CJ	CONTROL JOINT
CL	CENTERLINE
CLG	CEILING
CLO	CLOSET
CLR	CLEAR
CMU	CONCRETE MASONRY UNIT
CO	CASED OPENING
COL	COLUMN
COMB	COMBINATION
COMP	COMPOSITION (COMPOSITE)
CONC	CONCRETE
CONN	CONNECTION
CONST	CONSTRUCTION
CONT	CONTINUOUS (CONTINUE)
CONTR	CONTRACTOR
COORD	COORDINATE
CORR	CORRIDOR / CORRUGATED
CPT	CARPET
CR	CLOSET ROD
CS	CAST STONE
CSWK	CASEWORK
CT	CERAMIC TILE
CTB	CERAMIC TILE BASE
CTR	CENTER
CTSK	COUNTERSUNK
CU	COPPER
CU FT	CUBIC FEET
CU YD	CUBIC YARD
CURT	CURTAIN
CUST	CUSTODIAN
CW	CASEMENT WINDOW
DBL	DOUBLE
DEG	DEGREE
DEMO	DEMOLISH (DEMOLITION)
DEPT	DEPARTMENT
DET (DTL)	DETAIL
DF	DRINKING FOUNTAIN
DH	DOUBLE HUNG
DIA	DIAMETER
DIAG	DIAGONAL
DIM	DIMENSION
DISP	DISPENSER
DIV	DIVISION
DL	DEAD LOAD
DMPF	DAMPPROOFING
DN	DOWN
DR	DOOR
DS	DOWNSPOUT
DW	DISHWASHER
DWG	DRAWING
DWR	DRAWER
(E)	EXISTING
E	EAST
EA	EACH
EB	EXPANSION BOLT
EF	EACH FACE
EHD	ELECTRIC HAND DRYER
EIFS	EXTERIOR INSULATION & FINISH SYSTEM
EJ	EXPANSION JOINT
EL	ELEVATION
ELEC	ELECTRIC(AL)
ELEV	ELEVATOR
EM	EXPANDED METAL
EMER	EMERGENCY
ENCL	ENCLOSED / ENCLOSURE
ENGR	ENGINEER
ENTR	ENTRANCE
EOS	EDGE OF SLAB
EP	EPOXY PAINT
EPB	ELECTRIC PANEL BOARD
EPS	EXPANDED MOLDED POLYSTYRENE BOARD
EQ	EQUAL
EQUIP	EQUIPMENT
EST	ESTIMATE
EW	EACH WAY
EWC	ELECTRIC WATER COOLER
EXF	EXTERIOR FINISH
EXH	EXHAUST
EXP	EXPOSED
EXPS	EXTRUDED POLYSTYRENE BOARD
EXT	EXTERIOR
EXTR	EXTINGUISHER
FA	FIRE ALARM
FAB	FABRIC
FBO	FURNISHED BY OTHERS
FCO	FLOOR CLEANOUT
FCU	FAN COIL UNIT
FD	FLOOR DRAIN
FE	FIRE EXTINGUISHER
FEC	FIRE EXTINGUISHER CABINET
FF	FINISHED FLOOR
FFD	FOLDING FABRIC DOOR
FFE	FINISHED FLOOR ELEVATION
FFS	FACTORY FINISH
FG	FINISHED GRADE
FH	FIRE HYDRANT
FHMS	FLATHEAD MACHINE SCREW
FHWS	FLATHEAD WOOD SCREW
FIN	FINISH(ED)
FIXT	FIXTURE
FL	FLOW LINE
FLASH	FLASHING
FLR	FLOOR(ING)
FLUOR	FLOURESCENT
FND	FOUNDATION
FOC	FACE OF CONCRETE
FOF	FACE OF FINISH
FOM	FACE OF MASONRY
FOS	FACE OF STUD
FP	FIREPROOF
FPP	FOLDING PANEL PARTITION
FPWD	FOLDING PANEL WOOD DOOR
FR	FRAM(ED, ING)
FRP	FIBER REINFORCED PLASTIC
FRT	FIRE RETARDANT TREATED
FSP	FIRE STANDPIPE
FT	FEET, FOOT
FTG	FOOTING
FUT	FUTTURE
G	GROUND
GA	GAUGE
GALV	GALVANIZED
GB	GRAB BAR
GC	GENERAL CONTRACTOR
GEN	GENERAL
GFRC	GLASS FIBER REINFORCED CONCRETE
GFRG	GLASS FIBER REINFORCED GYPSUM
GI	GALVANIZED IRON
GL	GLASS, GLAZING
GL BLK	GLASS BLOCK
GLB	GLUE-LAMINATED BEAM
GLT	GLASS MOSAIC TILE
GPM	GALLONS PER MINUTE
GR	GROSS
GRT	GROUT
GT	GREASE TRAP
GV	GATE VALVE
GWB	GYPSUM WALL BOARD
GYP	GYPSUM
GYPBD	GYPSUM WALL BOARD
HB	HOSE BIB
HC	HOLLOW CORE
HC	HANDICAPPED
HCN	HOLLOW CORE NATURAL FINISH
HCP	HOLLOW CORE PAINT FINISH
HDR	HEADER
HDWD	HARDWOOD
HGT	HEIGHT
HM	HOLLOW METAL
HORIZ	HORIZONTAL
HP	HORSEPOWER
HR	HAND RAIL
HT	HEIGHT
HVAC	HEATING, VENTILATING, AIR CONDITIONING
HWP	HOT WATER PUMP
HWR	HARDWARE
HYD	HYDRANT
ID	INSIDE DIAMETER
IN	INCH / INCHES
INCL	INCLUDE(D) / INCLUDING
INSUL	INSULATE / INSULATION
INT	INTERIOR
INV	INVERT
J-BOX	JUNCTION BOX
JAN	JANITOR
JST	JOIST
JT	JOINT
KIT	KITCHEN
KO	KNOCKOUT
L	LENGTH
LAB	LABORATORY
LAM	LAMINATE
LAQ	LACQUER FINISH
LAV	LAVATORY
LB	LAG BOLT
LB(S)	POUND(S)
LC	LINEN CLOSET
LF	LINEAR FOOT, FEET
LGT	LIGHT
LH	LEFT HAND
LIB	LIBRARY
LKR	LOCKER
LL	LIVE LOAD
LPT	LOW POINT
LT	LIGHT
LT WT	LIGHTWEIGHT
LTL	LINTEL
LVR	LOUVER
LVT	LUXURY VINYL TILE
MANUF	MANUFACTURER
MAS	MASONRY
MAX	MAXIMUM
MB	MACHINE BOLT
MC	MEDICINE CABINET
MCP	MINERAL CORE PAINT FINISH
MCWD	MINERAL CORE WOOD NATURAL FINISH
ME	MECHANICAL ENGINEER
MECH	MECHANICAL
MED	MEDIUM
MET	METAL
MEZZ	MEZZANINE
MFR	MANUFACTURE(R)
MH	MANHOLE
MIN	MINIMUM
MIRR	MIRROR
MISC	MISCELLANEOUS
MKR BD	MARKER BOARD
MLDG	MOULDING
MO	MASONRY OPENING
MOD	MODULAR
MR	MOISTURE RESISTANT
MS	MOP SINK
MTD	MOUNTED
MTL	METAL
MTS	METAL TRANSITION STRIP
MULL	MULLION
MVBL	MOVEABLE
MW	MICROWAVE
(N)	NEW
N	NORTH
NA	NOT APPLICABLE
NAT	NATURAL
NFPA	NATIONAL FIRE PROTECTION ASSOCIATION
NIC	NOT IN CONTRACT
NO	NUMBER
NOM	NOMINAL
NR	NOISE REDUCTION
NRC	NOISE REDUCTION COEFFICIENT
NTS	NOT TO SCALE
OA	OVERALL
OC	ON CENTER
OD	OUTSIDE DIAMETER
OF	OUTSIDE FACE
OFCI	OWNER FURNISHED, CONSTRACTOR INSTALLED
OFD	OVERFLOW DRAIN
OFF	OFFICE
OFOI	OWNER FURNISHED, OWNER INSTALLED
OPG	OPENING
OPP	OPPOSITE
ORD	OVERFLOW ROOF DRAIN
OTS	OPEN TO STRUCTURE
OVHD	OVERHEAD
PAR	PARALLEL
PART	PARTIAL
PAT	PATTERN
PAV	PAVING, PAVEMENT
PBD	PARTICLE BOARD
PCC	PRECAST CONCRETE
PED	PEDESTAL
PERF	PERFORATED
PF	PAINT FLAT
PG	PAINT GLOSS
PH	PANIC HARDWARE
PL	PROPERTY LINE
PLAM	PLASTIC LAMINATE
PLAS	PLASTER
PLT	PLATE
PLUMB	PLUMBING
PLYWD	PLYWOOD
PNL	PANEL
POL	POLISHED
PR	PAIR
PREFAB	PREFABRICATED
PREFIN	PRE-FINISHED
PRST	PRESSURE TREATED
PS	PREFINISHED STEEL
PSF	POUNDS PER SQUARE FOOT
PSG	PAINT SEMI-GLOSS
PSI	POUNDS PER SQUARE INCH
PT	PAINT
PTD	PAINTED
PVC	POLYVINYL CHLORIDE
PVMT	PAVEMENT
QT	QUARRY TILE
QTY	QUANTITY
QZF	QUARTZ FLOORING
QZR	QUARTZ RESIN
QZT	QUARTZ TILE
R	RISER
R VALUE	THERMAL RESISTANCE
R, RAD	RADIUS
RA	RETURN AIR
RB	RESILIENT BASE
RCP	REINFORCED CONCRETE PIPE
RD	ROOF DRAIN
REBAR	REINFORCING STEEL
REC	RECESSED
REF	REFERENCE
REFL	REFLECT(ED), (IVE), (OR)
REFR	REFRIGERATOR
REG	REGISTER
REINF	REINFORCED
REQD	REQUIRED
REST	RESTROOM
REV	REVISION, REVISED
RF	RESILIENT FLOORING
RH	RIGHT HAND
RM	ROOM
RO	ROUGH OPENING
RTF	RUBBER TILE FLOORING
RTS	RUBBER TRANSITION STRIP
S	SOUTH
S.F.	SQUARE FOOT, FEET
SC	SOLID CORE
SCHED	SCHEDULE
SCN	SOLID CORE NATURAL FINISH
SCP	SOLID CORE PAINT FINISH
SCWD	SOLID CORE WOOD
SD	STORM DRAIN
SECT	SECTION
SF	STAIN FINISH
SG	LAMINATED TEMPERED SAFETY GLASS
SGL	SINGLE
SH	SINGLE HUNG
SHR	SHOWER
SHT	SHEET
SIM	SIMILAR
SL	SEA LEVEL
SLDG	SLIDING
SPEC	SPECIFICATIONS
SPK	SPEAKER
SQ	SQUARE
SS OR S/S	STAINLESS STEEL
ST	STREET
STA	STATION
STC	SOUND TRANSMISSION COEFFICIENT
STD	STANDARD
STL	STEEL
STO	STORAGE
STRUCT	STRUCTUR(E), (AL)
SUSP	SUSPENDED
SW	SWITCH
T	TREAD
T&B	TOP AND BOTTOM
T&G	TONGUE & GROOVE
T/S	TUB / SHOWER
TB	TOWEL BAR
TEL	TELEPHONE
TEMP	TEMPORARY
TG	TEMPERED GLASS
THK	THICKNESS
THRU	THROUGH
TKBD	TACK BOARD
TKP	TACKABLE PANELING
TOB	TOP OF BEAM
TOC	TOP OF CURB
TOCONC	TOP OF CONCRETE
TOD	TOP OF METAL DECK
TOM	TOP OF MASONRY
TOP	TOP OF PLATE
TOS	TOP OF SLAB
TOSTL	TOP OF STEEL
TOW	TOP OF WALL
TRTD	TREATED
TV	TELEVISION
TYP	TYPICAL
UG	UNGLAZED
UGND	UNDERGROUND
UL	UNDERWRITERS LABORATORY
UNFIN	UNIFINISHED
UNO	UNLESS NOTED OTHERWISE
UR	URINAL
VB	VINYL BASE
VCT	VINYL COMPOSITE TILE
VERT	VERTICAL
VEST	VESTIBULE
VF	VARNISH
VIF	VERIFY IN FIELD
VNR	VENEER
VOL	VOLUME
VP	VENEER PLASTER
VR	VAPOR RETARDER
VS	VENT STACK
VT	VINYL TILE
VTS	VINYL TRANSITION STRIP
VWC	VINYL WALL COVERING
W	WEST
W	WITH
WD	WASHER / DRYER
W/O	WITHOUT
WAC	WALL COVERING
WB	WOOD BASE
WC	WATER CLOSET
WD	WOOD
WDP	WOOD PANELING
WDT	WOOD TILE OR PARQUET FLOORING
WDV	WOOD VENEER
WF	WIDE FLANGE
WG	WIRE GLASS
WH	WATER HEATER
WHR	WEATHER RESISTANT
WI	WROUGHT IRON
WIC	WOODWORK INSTITUTE OF CALIFORNIA
WIND	WINDOW
WP	WATERPROOFING
WR	WATER REPELLENT
WS	WEATHERSTRIPPING
WSCT	WAINSCOT
WT	WEIGHT
WWF	WELDED WIRE FABRIC
YD	YARD

GENERAL NOTES

1. PRIOR TO CONSTRUCTION, THE CONTRACTOR SHALL VERIFY THE LOCATION OF ALL EXISTING AND PROPOSED CONSTRUCTION, PIPING, CONDUITS, CLEAN-OUTS, PULL BOXES, ETC. ANY DISCREPANCIES SHALL BE BROUGHT TO THE ATTENTION OF THE DISTRICT AND ARCHITECT PRIOR TO COMMENCING WORK.
2. CONTRACTOR SHALL VISIT THE SITE AND VERIFY ALL GRADES ELEVATIONS, DIMENSIONS, AND CONDITIONS OF INSTALLATION PRIOR TO PROVIDING BID. ANY DISCREPANCIES DISCOVERED BY THE CONTRACTOR DURING THE ABOVE INVESTIGATIONS SHALL BE REPORTED IMMEDIATELY TO THE ARCHITECT. THE CONTRACTOR BY MEANS OF OFFERING A BID SHALL THEREBY CERTIFY THAT THE ABOVE STATED REQUIREMENTS HAVE BEEN MET.
3. GENERAL CONTRACTOR SHALL INCLUDE ALL LABOR, MATERIAL, EQUIPMENT, AND TRANSPORTATION NECESSARY FOR THE COMPLETE AND PROPER EXECUTION OF THE WORK.
4. THE ADEQUACY AND SAFETY OF ERECTION BRACING, SHORING, TEMPORARY SUPPORTS, ETC., IS THE SOLE RESPONSIBILITY OF THE CONTRACTOR, AND HAS NOT BEEN CONSIDERED BY THE ARCHITECT AND / OR STRUCTURAL ENGINEER.
5. ALL WORK SHALL CONFORM TO 2022 TITLE 24, CALIFORNIA CODE OF REGULATIONS (CCR).
6. CONTRACTOR SHALL REMOVE FROM SITE AND DISPOSE OF IN A LEGAL MANNER ALL EXCESS DIRT / SOIL AND DEBRIS RESULTANT OF THE CONSTRUCTION ACTIVITIES ASSOCIATED WITH THIS PROJECT.
7. CONTRACTOR SHALL BE REQUIRED TO OBTAIN ALL NECESSARY PERMITS AND APPROVALS FOR ALL WORK THAT OCCURS IN ANY PUBLIC RIGHT-OF-WAY AND / OR EASEMENT. FEES FOR REQUIRED PERMITS SHALL BE PAID FOR DIRECTLY BY THE CITY OF RIDGECREST AND SHALL BE REIMBURSED BY THE CITY OF RIDGECREST 1:1.
8. PROPERLY REMOVE ALL DEMOLISHED ITEMS AND MATERIALS FROM THE SITE AND DISPOSE OF ALL IN A LEGAL MANNER.
9. REPAIR OR REPLACE EXISTING WALKS, UTILITY LINES, LANDSCAPING, ETC. THAT ARE DAMAGED DURING CONSTRUCTION. PROTECT ALL EXISTING CONSTRUCTION DESIGNATED TO REMAIN.
10. CHANGES TO THE APPROVED DRAWINGS AND SPECIFICATIONS SHALL BE MADE BY AN ADDENDA OR A CONSTRUCTION CHANGE DOCUMENT (CCD), INCLUDING PROPERTY LINE SETBACKS, FLOOR PLANS, REQUIRED PATH OF TRAVEL, EXTERIOR MATERIALS AND/OR COLORS, GRADE ELEVATION, PAVING, WALKWAYS, DRIVEWAYS, PARKING, LANDSCAPING, EXTERIOR LIGHTING, FENCING, ETC. MUST BE APPROVED BY THE KERN COUNTY PLANNING DIVISION OF ENVIROMENTAL SERVIES PRIOR TO IMPLEMENTATION.
11. CONTRACTOR SHALL NOTIFY THE CITY OF RIDGECREST AND ARCHITECT IN WRITING UPON COMPLETION OF SITE PREPARATION.
12. PATCH AND REPAIR ALL SURFACES AFFECTED BY CONTRACT WORK AND BY SELECTIVE DEMOLITION TO A "LIKE NEW" CONDITION OR TO MATCH EXISTING ADJACENT FINISHES.
13. FIRE SAFETY DURING CONSTRUCTION, ALTERATION OR DEMOLITION SHALL BE IN ACCORDANCE WITH 2022 CFC CHAPTER 7, 11 AND 33.
14. ALL CONTRACTORS ARE ADVISED THAT CERTAIN PORTIONS OF THE WORK MAY NOT BE EASY AND MAY EXCEED THE ASSUMED STANDARD OF THE INDUSTRY, INCLUDING MEANS AND METHOD, OPERATIONAL STAGING, SCHEDULING AND COORDINATION OF WORK, AS WELL AS TIME AND DURATION OF ACTIVITIES NECESSARY TO SATISFACTORILY COMPLETE THE PROJECT IN ACCORDANCE WITH THIS CONTRACT. CONTRACTOR SHALL PROVIDE ALL NECESSARY LABOR, MATERIALS AND OPERATIONAL SUPPORT NECESSARY TO COMPLETE THE PROJECT AS REQUIRED UNDER THIS CONTRACT.
15. CONTRACTOR SHALL BE RESPONSIBLE FOR OBTAINING WATER NECESSARY FOR CONSTRUCTION. WATER CAN BE MADE AVAILABLE ON-SITE VIA EXISTING HYDRANT, AND SHALL BE PROPERLY METERED THROUGH LOCAL WATER AGENCY.
16. CONTRACTOR MAY ONLY STAGE AND PERFORM WORK IN AREAS SPECIFICALLY IDENTIFIED FOR THIS CONTRACT. ALL WORK REQUIRED TO BE PERFORMED OUTSIDE OF THE DESIGNATED AREAS SHALL REQUIRE MONITORING BY ASSIGNED DISTRICT STAFF OR SHALL BE PERFORMED DURING NON-SCHOOL HOURS. ALL REQUESTS FOR MONITORED WORK SHALL BE MADE IN WRITING 48 HOURS IN ADVANCE BY GENERAL CONTRACTOR AND SCHEDULING SHALL BE SUBJECT TO APPROVAL BY DISTRICT.
17. CONSTRUCTION AREA OVERLAPS ACTIVE SERVICE AREAS NECESSARY FOR THE NORMAL DAILY OPERATION OF THE SCHOOL. CONTRACTOR SHALL AT ALL TIMES MAINTAIN AND ALLOW ACCESS ON SITE FOR EMERGENCY VEHICLES, TRASH COLLECTION, LANDSCAPE, GENERAL SCHOOL MAINTENANCE AND FOOD SERVICE DELIVERY. CONTRACTOR SHALL COORDINATE CLOSELY WITH THE CITY OF RIDGECREST FOR ALL NECESSARY ACCESS.
18. CONTRACTOR SHALL PROVIDE AND MAINTAIN FOR THE DURATION OF THE CONTRACT OPAQUE VINYL SCREENS (TARP OR SIMILAR) PROPERLY SECURED TO ALL TEMPORARY CONSTRUCTION FENCING AND GATES AS WELL AS ALL EXISTING FENCING THAT DEFINES A PERIMETER OF ANY DESIGNATED CONSTRUCTION AREA. SCREENING SHALL BE MINIMUM 6'-0" HIGH AND SHALL BE BLACK, GREEN OR TAN IN COLOR.
19. FOR THE DURATION OF THE CONTRACT, THE CONTRACTOR SHALL BE RESPONSIBLE FOR STRICT COMPLIANCE WITH LOCAL AGENCY HAVING JURISDICTION FOR ALL, FUGITIVE DUST AND SHALL BE RESPONSIBLE FOR ALL PENALTIES, FINES, ETC. IF THE PROJECT SHOULD BE CITED FOR VIOLATIONS.
20. DUE TO THE SITE CONSTRAINTS OF THE ACTIVE ADJACENT JAMES MONROE MIDDLE SCHOOL SITE, THE CONTRACTOR MAY BE REQUIRED TO STAGE IN VARIOUS AVAILABLE AREAS ON SITE AND MAY BE REQUIRED TO MOVE OR RELOCATE STAGING DURING THE COURSE OF CONSTRUCTION IN ORDER TO ACCOMMODATE CONSTRUCTION AND SCHEDULE. CONTRACTOR SHALL FACTOR IN ALL NECESSARY MEASURES TO ACCOMMODATE THE TIMELY COMPLETION OF THIS CONTRACT.
21. CONTRACTOR SHALL NOT INTERRUPT ANY UTILITY SERVICE TO ACTIVE ADJACENT JAMES MONROE MIDDLE SCHOOL SITE WITHOUT EXPRESSED PERMISSION AND PRIOR SCHEDULING WITH DISTRICT.
22. CONTRACTOR MAY UTILIZE EXISTING ELECTRICAL SERVICE IN YARD FOR TEMPORARY POWER. ALL TEMPORARY POWER INSTALLATION SHALL ADHERE TO APPLICABLE CODES.
23. GRADING PLANS, DRAINAGE IMPROVEMENTS, ROAD AND ACCESS REQUIREMENTS AND ENVIRONMENTAL HEALTH CONSIDERATIONS SHALL COMPLY WITH ALL LOCAL ORDINANCES.
24. TITLE 24, PARTS 1-5 AND 9 MUST BE KEPT ON SITE DURING CONSTRUCTION.
25. ALL STRUCTURAL, ARCHITECTURAL, MECHANICAL, ELECTRICAL, AND PLUMBING MATERIALS INSTALLATION TO COMPLY WITH APPLICABLE CODES, STANDARDS, AND MANUFACTURER'S RECOMMENDATIONS.
26. THE PROJECT INSPECTION (PI) SHALL WITNESS AND VERIFY GROUNDING.
27. THE CALIFORNIA ENERGY CODE SECTION 10-103 REQUIRES ACCEPTANCE TESTING ON ALL NEWLY INSTALLED LIGHTING CONTROLS, MECHANICAL SYSTEMS, ENVELOPES, AND PROCESS EQUIPMENT AFTER INSTALLATION AND BEFORE PROJECT COMPLETION. AN ACCEPTANCE TEST IS A FUNCTIONAL PERFORMANCE TEST TO HELP ENSURE THAT NEWLY INSTALLED EQUIPMENT IS OPERATING AND IN COMPLIANCE WITH THE ENERGY CODE. A LISTING OF CERTIFIED ATT CAN BE FOUND AT: HTTPS://WWW.ENERGY.CA.GOV/PROGRAMS-AND-TOPICS/PROGRAMS/ ACCEPTANCE-TEST-TECHNICIAN-CERTIFICATION-PROVIDER-PROGRAM/ACCEPTANCE.
28. LIGHTING CONTROLS ACCEPTANCE TESTS MUST BE PERFORMED BY A CERTIFIED LIGHTING CONTROLS ACCEPTANCE TEST TECHNICIAN (ATT).
29. MECHANICAL SYSTEM ACCEPTANCE TESTS MUST BE PERFORMED BY A CERTIFIED MECHANICAL ATT FOR PROJECTS SUBMITTED ON OR AFTER OCTOBER 1, 2021.
30. ENVELOPE AND PROCESS EQUIPMENT ACCEPTANCE TESTS SHALL BE PERFORMED BY THE INSTALLING CONTRACTOR, ENGINEER/ARCHITECT OF RECORD OR THE OWNER'S AGENT.
31. THE ACCEPTANCE TESTING PROCEDURES MUST BE REPEATED, AND DEFICIENCIES MUST BE CORRECTED BY THE BUILDER OR INSTALLING CONTRACTOR UNTIL THE CONSTRUCTION/INSTALLATION OF THE SPECIFIED SYSTEMS CONFORM AND PASS THE REQUIRED ACCEPTANCE CRITERIA.
32. PROJECT INSPECTORS WILL COLLECT THE FORMS TO CONFIRM THAT THE REQUIRED ACCEPTANCE TESTS HAVE BEEN COMPLETED.

SYMBOLS

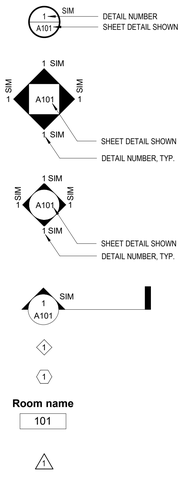

VICINITY MAP

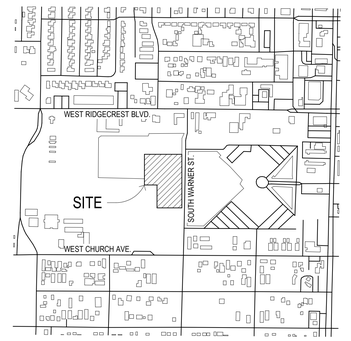

AGENCY

FLEWELLING & MOODY
architecture planning interiors

HEADQUARTERS OFFICE:
99 S. Lake Avenue, Suite 300
Pasadena, CA 91101
Phone: 323.543.8300
E-Mail: fm-pasadena@flewelling-moody.com

ANTELOPE VALLEY OFFICE:
1035 West Lancaster Boulevard
Lancaster, California 93534
Phone: 661.949.0771
E-Mail: fm-lancaster@flewelling-moody.com

An Employee Owned Corporation

ARCHITECT

LICENSED ARCHITECT
MATT T. GABBERT
C-14211
06/30/2025
STATE OF CALIFORNIA

CONSULTANT

Drawn by: Author

Check by: Checker

Revisions

No.	Date	Description
1	08/27/2025	BID ALTERNATE

All dimensions must be checked at the job by the contractor who accepts full responsibility for their accuracy under the contract. These plans & the specifications in connection therewith have been prepared for a specific site. Any and all responsibility for their use in whole or in part on any other site is hereby disclaimed by Flewelling & Moody.

CITY OF RIDGECREST

SGT. JOHN PINNEY MEMORIAL POOL REPLACEMENT PROJECT

205 S WARNER ST, RIDGECREST, CA 93555

Drawing Title

GENERAL NOTES

Job No. 3055-0100

Sheet No. **T0.02**

Date 12/20/2024

2022 CALIFORNIA GREEN BUILDING STANDARDS CODE
NONRESIDENTIAL MANDATORY MEASURES, SHEET 1 (January 2023)

Y = YES
N/A = NOT APPLICABLE
RESPON. PARTY = RESPONSIBLE PARTY (ie: ARCHITECT, ENGINEER, OWNER, CONTRACTOR, INSPECTOR ETC.)

CHAPTER 3
GREEN BUILDING
SECTION 301 GENERAL

301.1 SCOPE. Buildings shall be designed to include the green building measures specified as mandatory in the application checklists contained in this code. Voluntary green building measures are also included in the application checklists and may be included in the design and construction of structures covered by this code, but are not required unless adopted by a city, county, or city and county as specified in Section 101.7.

301.3 NONRESIDENTIAL ADDITIONS AND ALTERATIONS. [BSC-CG] The provisions of individual sections of Chapter 5 apply to newly constructed buildings, building additions of 1,000 square feet or greater, and/or building alterations with a permit valuation of $200,000 or above (for occupancies within the authority of California Building Standards Commission). Code sections relevant to additions and alterations shall only apply to the portions of the building being added or altered within the scope of the permitted work.

A code section will be designated by a banner to indicate where the code section only applies to newly constructed buildings [N] or to additions and/or alterations [A]. When the code section applies to both, no banner will be used.

301.3.1 Nonresidential additions and alterations that cause updates to plumbing fixtures only:

Note: On and after January 1, 2014, certain commercial real property, as defined in Civil Code Section 1101.3, shall have its noncompliant plumbing fixtures replaced with appropriate water-conserving plumbing fixtures under specific circumstances. See Civil Code Section 1101.1 *et seq.* for definitions, types of commercial real property affected, effective dates, circumstances necessitating replacement of noncompliant plumbing fixtures, and duties and responsibilities for ensuring compliance.

301.3.2 Waste Diversion. The requirements of Section 5.408 shall be required for additions and alterations whenever a permit is required for work.

301.4 PUBLIC SCHOOLS AND COMMUNITY COLLEGES. (see GBSC)
301.5 HEALTH FACILITIES. (see GBSC)

SECTION 302 MIXED OCCUPANCY BUILDINGS

302.1 MIXED OCCUPANCY BUILDINGS. In mixed occupancy buildings, each portion of a building shall comply with the specific green building measures applicable to each specific occupancy.

SECTION 303 PHASED PROJECTS

303.1 PHASED PROJECTS. For shell buildings and others constructed for future tenant improvements, only those code measures relevant to the building components and systems considered to be new construction (or newly constructed) shall apply.

303.1.1 Initial Tenant improvements. The provisions of this code shall apply only to the initial tenant improvements to a project. Subsequent tenant improvements shall comply with the scoping provisions in Section 301.3 non-residential additions and alterations.

ABBREVIATION DEFINITIONS:

HCD	Department of Housing and Community Development
BSC	California Building Standards Commission
DSA-SS	Division of the State Architect, Structural Safety
OSHPD	Office of Statewide Health Planning and Development
LR	Low Rise
HR	High Rise
AA	Additions and Alterations
N	New

CHAPTER 5
NONRESIDENTIAL MANDATORY MEASURES
DIVISION 5.1 PLANNING AND DESIGN
SECTION 5.101 GENERAL

5.101.1 SCOPE
The provisions of this chapter outline planning, design and development methods that include environmentally responsible site selection, building design, building siting and development to protect, restore and enhance the environmental quality of the site and respect the integrity of adjacent properties.

SECTION 5.102 DEFINITIONS

5.102.1 DEFINITIONS
The following terms are defined in Chapter 2 *(and are included here for reference)*

CUTOFF LUMINAIRES. Luminaires whose light distribution is such that the candela per 1000 lamp lumens does not numerically exceed 25 (2.5 percent) at an angle of 90 degrees above nadir, and 100 (10 percent) at a vertical angle of 80 degrees above nadir. This applies to all lateral angles around the luminaire.

LOW-EMITTING AND FUEL EFFICIENT VEHICLES.
Eligible vehicles are limited to the following:

1. Zero emission vehicle (ZEV), enhanced advanced technology PZEV (enhanced AT ZEV) or transitional zero emission vehicles (TZEV) regulated under CCR, Title 13, Section 1962.
2. High-efficiency vehicles, regulated by U.S. EPA, bearing a fuel economy and greenhouse gas rating od 9 oe 10 as regulated under 40 CFR Section 600 Subpart D.

NEIGHBORHOOD ELECTRIC VEHICLE (NEV). A motor vehicle that meets the definition of "low-speed vehicle" either in Section 385.5 of the Vehicle Code or in 49CFR571.500 (as it existed on July 1, 2000), and is certified to zero-emission vehicle standards.

TENANT-OCCUPANTS. Building occupants who inhabit a building during its normal hours of operation as permanent occupants, such as employees, as distinguished from customers and other transient visitors.

VANPOOL VEHICLE. Eligible vehicles are limited to any motor vehicle, other than a motortruck or truck tractor, designed for carrying more than 10 but not more than 15 persons including the driver, which is maintained and used primarily for the nonprofit work-related transportation of adults for the purpose of ridesharing.

Note: Source: Vehicle Code, Division 1, Section 668

ZEV. Any vehicle certified to zero-emission standards.

SECTION 5.106 SITE DEVELOPMENT

5.106.1 STORM WATER POLLUTION PREVENTION FOR PROJECTS THAT DISTURB LESS THAN ONE ACRE OF LAND. Newly constructed projects and additions which disturb less than one acre of land, and are not part of a larger common plan of development or sale, shall prevent the pollution of storm water runoff from the construction activities through one or more of the following measures:

5.106.1.1 Local ordinance. Comply with a lawfully enacted storm water management and/or erosion control ordinance.

5.106.1.2 Best Management Practices (BMPs). Prevent the loss of soil through wind or water erosion by implementing an effective combination of erosion and sediment control and good housekeeping BMPs.

1. Soil loss BMPs that should be considered for implementation as appropriate for each project include, but are not limited to, the following:
   a. Scheduling construction activity during dry weather, when possible.
   b. Preservation of natural features, vegetation, soil, and buffers around surface waters.
   c. Drainage swales or lined ditches to control stormwater flow.
   d. Mulching or hydroseeding to stabilize disturbed soils.
   e. Erosion control to protect slopes.
   f. Protection of storm drain inlets (gravel bags or catch basin inserts).
   g. Perimeter sediment control (perimeter silt fence, fiber rolls).
   h. Sediment trap or sediment basin to retain sediment on site.
   i. Stabilized construction exits.
   j. Wind erosion control.
   k. Other soil loss BMPs acceptable to the enforcing agency.
2. Good housekeeping BMPs to manage construction equipment, materials, non-stormwater discharges and wastes that should be considered for implementation as appropriate for each project include, but are not limited to, the following:
   a. Dewatering activities.
   b. Material handling and waste management.
   c. Building materials stockpile management.
   d. Management of washout areas (concrete, paints, stucco, etc.).
   e. Control of vehicle/equipment fueling to contractor's staging area.
   f. Vehicle and equipment cleaning performed off site.
   g Spill prevention and control.
   h. Other housekeeping BMPs acceptable to the enforcing agency.

5.106.2 STORMWATER POLLUTION PREVENTION FOR PROJECTS THAT DISTURB ONE OR MORE ACRES OF LAND. Comply with all lawfully enacted stormwater discharge regulations for projects that (1) disturb one acre or more of land, or (2) disturb less than one acre of land but are part of a larger common plan of development sale.

Note: Projects that (1) disturb one acre or more of land, or (2) disturb less than one acre of land but are part of the larger common plan of development or sale must comply with the post-construction requirements detailed in the applicable National Pollutant Discharge Elimination System (NPDES) General permit for Stormwater Discharges Associated with Construction and Land Disturbance Activities issued by the State Water Resources Control Board or the Lahontan Regional Water Quality Control Board (for projects in the Lake Tahoe Hydrologic Unit).

The NPDES permits require postconstruction runoff (post-project hydrology) to match the preconstruction runoff (pre-project hydrology) with the installation of postconstruction stormwater management measures. The NPDES permits emphasize runoff reduction through on-site stormwater use, interception, evapotranspiration, and infiltration through nonstructural controls, such as Low Impact Development (LID) practices, and conversation design measures. Stormwater volume that cannot be addressed using nonstructural practices is required to be captured in structural practices and be approved by the enforcing agency.

Refer to the current applicable permits on the State Water Resources Control Board website at: www.waterboards.ca.gov/constructionstormwater. Consideration to the stormwater runoff management measures should be given during the initial design process for appropriate integration into site development.

5.106.4 BICYCLE PARKING. For buildings within the authority of California Building Standards Commission as specified in Section 103, comply with Section 5.106.4.1. For buildings within the authority of the Division of the State Architect pursuant to Section 105, comply with Section 5.106.4.2

5.106.4.1 Bicycle parking. [BSC-CG] Comply with Sections 5.106.4.1.1 and 5.106.4.1.2; or meet the applicable local ordinance, whichever is stricter.

5.106.4.1.1 Short-term bicycle parking. If the new project or an addition or alteration is anticipated to generate visitor traffic, provide permanently anchored bicycle racks within 200 feet of the visitors' entrance, readily visible to passers-by, for 5% of new visitor motorized vehicle parking spaces being added, with a minimum of one two-bike capacity rack.
Exception: Additions or alterations which add nine or less visitor vehicular parking spaces.

5.106.4.1.2 Long-term bicycle parking. For new buildings with tenant spaces that have 10 or more tenant-occupants, provide secure bicycle parking for 5 percent of the tenant-occupant vehicular parking spaces with a minimum of one bicycle parking facility.

5.106.4.1.3 For additions or alterations that add 10 or more tenant-occupant vehicular parking spaces, provide secure bicycle parking for 5 percent of the tenant vehicular parking spaces being added, with a minimum of one bicycle parking facility.

5.106.4.1.4 For new shell buildings in phased projects provide secure bicycle parking for 5 percent of the anticipated tenant-occupant vehicular parking spaces with a minimum of one bicycle parking facility.

5.106.4.1.5 Acceptable bicycle parking facility for Sections 5.106.4.1.2, 5.106.4.1.3, and 5.106.4.1.4 shall be convenient from the street and shall meet one of the following:

1. Covered, lockable enclosures with permanently anchored racks for bicycles;
2. Lockable bicycle rooms with permanently anchored racks; or
3. Lockable, permanently anchored bicycle lockers.

Note: Additional information on recommended bicycle accommodations may be obtained from Sacramento Area Bicycle Advocates.

5.106.4.2 Bicycle parking. [DSA-SS] For public schools and community colleges, comply with Sections 5.106.4.2.1 and 5.106.4.2.2

5.106.4.2.1 Student bicycle parking. Provide permanently anchored bicycle racks conveniently accessed with a minimum of four two-bike capacity racks per new building.
5.106.4.2.2 Staff bicycle parking. Provide permanent, secure bicycle parking conveniently accessed with a minimum of two staff bicycle parking spaces per new building. Acceptable bicycle parking facilities shall be convenient from the street or staff parking area and shall meet one of the following:

1. Covered, lockable enclosures with permanently anchored racks for bicycles;
2. Lockable bicycle rooms with permanently anchored racks; or
3. Lockable, permanently anchored bicycle lockers.

5.106.5.3 Electric vehicle (EV) charging. [N] Construction to provide electric vehicle infrastructure and facilitate electric vehicle charging shall comply with Section 5.106.5.3.1 and shall be provided in accordance with regulations in the California Building Code and the California Electrical Code.

Exceptions:

1. On a case-by-case basis where the local enforcing agency has determined compliance with this section is not feasible based upon one of the following conditions:
   a. Where there is no local utility power supply
   b. Where the local utility is unable to supply adequate power.
   c. Where there is evidence suitable to the local enforcement agency substantiating that local utility infrastructure design requirements, directly related to the implementation of Section 5.106.5.3, may adversely impact the construction cost of the project.
2. Parking spaces accessible only by automated mechanical car parking systems are not required to comply with this code section

5.106.5.3.1 EV capable spaces.
[N] EV capable spaces shall be provided in accordance with Table 5.106.5.3.1 and the following requirements:

1. Raceways complying with the California Electrical Code and no less that 1-inch (25 mm) diameter shall be provided and shall originate at a service panel or a subpanel(s) serving the area, and shall terminate in close proximity to the proposed location of the EV capable and into a suitable listed cabinet, box,enclosure or equivalent. A common raceway may be used to serve multiple EV charging spaces.
2. A service panel or subpanel (s) shall be provided with panel space and electrical load capacity for a dedicated 208/240 volt, 40-ampere minimum branch circuit for each EV capable space, with delivery of 30-ampere minimum to an installed EVSE at each EVCS.
3. The electrical system and any on-site distribution transformers shall have sufficient capacity to supply full rated amperage at each EV capable space.
4. The service panel or subpanel circuit directory shall identify the reserved overcurrent protective devices space(s) as "EV CAPABLE". The raceway termination location shall be permanently and visibly marked as "EV CAPABLE."

Note: A parking space served by electric vehicle supply equipment or designed as a future EV charging space shall count as at least one standard automobile parking space only for the purpose of complying with any applicable minimum parking space requirements established by an enforcement agency. See vehicle Code Section 22511.2 for further details.

TABLE 5.106.5.3.1

TOTAL NUMBER OF ACTUAL PARKING SPACES	NUMBER OF REQUIRED EV CAPABLE SPACES	NUMBER OF EVCS (EV CAPABLE SPACES PROVIDED WITH EVSE)*2
0-9	0	0
10-25	2	0
26-50	8	2
51-75	13	3
76-100	17	4
101-150	25	6
151-200	35	9
201 AND OVER	20% of total[1]	25% of EV capable spaces[1]

1. Where there is insufficient electrical supply.
2. The number of required EVCS (EV capable spaces provided with EVSE) in column 3 count towards the total number of required EV capable spaces shown in column 2.

5.106.5.3.2 Electric vehicle charging stations (EVCS)
EV capable spaces shall be provided with EVSE to create EVCS in the number indicated in Table 5.106.5.3.1. The EVCS required by Table 5.106.5.3.1 may be provided with EVSE in any combination of Level 2 and Direct Current Fast Charging (DCFC), except that at least one Level 2 EVSE shall be provided.

One EV charger with multiple connectors capable of charging multiple EVs simultaneously shall be permitted if the electrical load capacity required by Section 5.106.5.3.1 for each EV capable space is accumulatively supplied to the EV charger.

The installation of each DCFC EVSE shall be permitted to reduce the minimum number of required EV capable spaces without EVSE by five and reduce proportionally the required electrical load capacity to the service panel or subpanel.

5.106.5.3.3 Use of automatic load management systems (ALMS).
ALMS shall be permitted for EVCS. When ALMS is installed, the required electrical load capacity specified in Section
5.106.5.3.1 for each EVCS may be reduced when serviced by an EVSE controlled by an ALMS. Each EVSE controlled by an ALMS shall deliver a minimum 30 amperes to an EV when charging one vehicle and shall deliver a minimum 3.3 kW while simultaneously charging multiple EVs.

5.106.5.3.4 Accessible EVCS.
When EVSE is installed, accessible EVSC shall be provided in accordance with the *California Building Code*, Chapter 11B, Section 11B-228.3.
Note: For EVCS signs, refer to Caltrans Traffic Operations Policy Directive 13-01 (Zero Emission Vehicle Signs and Pavement Markings) or its successor(s).

5.106.5.4 Electric Vehicle (EV) charging: medium-duty and heavy-duty. [N]
Construction shall comply with section 5.106.5.4.1 to facilitate future installation of electric vehicle supply equipment (EVSE). Construction for warehouses, grocery stores and retail stores with planned off-street loading spaces shall also comply with Section 5.106.5.4.1 for future installation of medium- and heavy-duty EVSE.
Exceptions:

1. On a case-by-case basis where the local enforcing agency has determined compliance with this section is not feasible based upon one of the following conditions:
   a. Where there is no local utility power supply.
   b. Where the local utility is unable to supply adequate power.
   c. Where there is evidence suitable to the local enforcing agency substantiating that additional local utility infrastructure design requirements, directly related to the implementation of Section 5.106.5.3, may adversely impact the construction cost of the project.

When EVSE(s) is/are installed, it shall be in accordance with the *California Building Code*, the *California Electrical Code* and as follows:

5.106.5.4.1 Electric vehicle charging readiness requirements for warehouse, grocery stores and retail stores with planned off-street loading spaces.
[N] In order to avoid future demolition when adding EV charging supply and distribution equipment, spare raceways(s) or busway(s) and adequate capacity for transformers(s), service panels(s) or subpanel(s) shall be installed at the time of construction in accordance with the California Electrical Code. Construction plans and specifications shall include but are not limited to, the following:

1. The transformer, main service equipment and subpanel shall meet the minimum power requirement in Table 5.106.5.4.1 to accommodate the dedicated branch circuits for the future installation of EVSE.
2. The construction documents shall indicate on or more location(s) convenient to the planned offstreet loading space(s) reserved for medium-and heavy-duty ZEV charging cabinets and charging dispensers, and a pathway reserved for routing of conduit from the termination of the raceway(s) or busway(s) to the charging cabinet(s) and dispenser(s) as shown in Table 5.106.5.4.1
3. Raceway(s) or busway(s) originating at a main service panel or a subpanel(s) serving the area where potential future medium-and heavy-duty EVSE will be located and shall terminate in close proximity to the potential future location of the charging equipments for medium- and heavy-duty vehicles.
4. The raceway(s) or busway(s) shall be sufficient size to carry the minimum additional system load to the future location of the charging for medium- and heavy-duty ZEVs as shown in Table 5.106.5.4.1.

TABLE 5.106.5.4.1 RACEWAY CONDUIT AND PANEL POWER REQUIREMENTS FOR MEDIUM- AND HEAVY-DUTY EVSE [N]

BUILDING TYPE	BUILDING SIZE (SQ. FT.)	NUMBER OF OFF-STREET LOADING SPACES	ADDITIONAL CAPACITY REQUIRED (KVA) FOR RACEWAY & BUSWAY AND TRANSFORMER & PANEL
Grocery	10,000 to 90,000	1 or 2	200
		3 or Greater	400
	Greater than 90,000	1 or Greater	400
Retail	10,000 to 135,000	1 or 2	200
		3 or Greater	400
	Greater than 135,000	1 or Greater	400
Warehouse	20,000 to 256,000	1 or 2	200
		3 or Greater	400
	Greater than 256,000	1 or Greater	400

5.106.8 LIGHT POLLUTION REDUCTION. [N]. I Outdoor lighting systems shall be designed and installed to comply with the following:

1. The minimum requirements in the California Energy Code for Lighting Zones 0-4 as defined in Chapter 10, Section 10-114 of the California Administrative Code; and
2. Backlight (B) ratings as defined in IES TM-15-11 (shown in Table A-1 in Chapter 8);
3. Uplight and Glare ratings as defined in California Energy Code (shown in Tables 130.2-A and 130.2-B in Chapter 8) and
4. Allowable BUG ratings not exceeding those shown in Table 5.106.8, [N] or Comply with a local ordinance lawfully enacted pursuant to Section 101.7, whichever is more stringent.

Exceptions: [N]

1. Luminaires that qualify as exceptions in Sections 130.2 (b) and 140.7 of the California Energy Code.
2. Emergency lighting.
3. Building facade meeting the requirements in Table 140.7-B of the California Energy Code, Part 6.
4. Custom lighting features as allowed by the local enforcing agency, as permitted by Section 101.8 Alternate materials, designs and methods of construction.
5. Luminaires with less than 6,200 initial luminaire lumens.

TABLE 5.106.8 [N] MAXIMUM ALLOWABLE BACKLIGHT, UPLIGHT AND GLARE (BUG) RATINGS [1,2]

ALLOWABLE RATING	LIGHTING ZONE LZ0	LIGHTING ZONE LZ1	LIGHTING ZONE LZ2	LIGHTING ZONE LZ3	LIGHTING ZONE LZ4
MAXIMUM ALLOWABLE BACKLIGHT RATING [3]					
Luminaire greater than 2 mounting heights (MH) from property line	N/A	No Limit	No Limit	No Limit	No Limit
Luminaire back hemisphere is 1-2 MH from property line	N/A	B2	B3	B4	B4
Luminaire back hemisphere is 0.5-1 MH from property line	N/A	B1	B2	B3	B3
Luminaire back hemisphere is less than 0.5 MH from property line	N/A	B0	B0	B1	B2
MAXIMUM ALLOWABLE UPLIGHT RATING (U)					
For area lighting [3]	N/A	U0	U0	U0	U0
For all other outdoor lighting,including decorative luminaires	N/A	U1	U2	U3	UR
MAXIMUM ALLOWABLE GLARE RATING [3] **(G)**					
MAXIMUM ALLOWABLE GLARE RATING [3] **(G)**	N/A	G1	G2	G3	G4
MAXIMUM ALLOWABLE GLARE RATING [3] **(G)**	N/A	G0	G1	G1	G2
MAXIMUM ALLOWABLE GLARE RATING [3] **(G)**	N/A	G0	G0	G1	G1
MAXIMUM ALLOWABLE GLARE RATING [3] **(G)**	N/A	G0	G0	G0	G1

1. IESNA Lighting Zones 0 and 5 are not applicable; refer to Lighting Zones as defined in the *California Energy Code* and Chapter 10 of the *California Administrative Code.*

2. For property lines that abut public walkways, bikeways, plazas and parking lots, the property line may be considered to be 5 feet beyond the actual property line for purpose of determining compliance with this section. For property lines that abut public roadways and public transit corridors, the property line may be considered to be the centerline of the public roadway or public transit corridor for the purpose of determining compliance with this section.

3. General lighting luminaires in areas such as outdoor parking, sales or storage lots shall meet these reduced ratings. Decorative luminaries located in these areas shall meet *U*-value limits for "all other outdoor lighting"

5.106.8.1 Facing- Backlight
Luminaries within 2MH of a property line shall be oriented so that the nearest property line is behind the fixture, and shall comply with the backlight rating specified in Table 5.106.8 based on the lighting zone and distance to the nearest point of that property line.
Exception: Corners. If two property lines (or two segments of the same property line) have equidistant point to the luminaire, then the luminaire may be oriented so that the intersection of the two lines (the corner) is directly behind the luminaire. The luminaire shall still use the distance to the nearest points(s) on the property lines to determine the required backlight rating.

5.106.8.2 Facing-Glare.
For luminaires covered by 5.106.8.1, if a property line also exists within or extends into the front hemisphere within 2MH of the luminaire then the luminaire shall comply with the more stringent glare rating specified in Table 5.106.8 based on the lighting zone and distance to the nearest point on the nearest property line within the front hemisphere.

Note: [N]
1.See also *California Building Code*, Chapter 12, Section 1205.6 for college campus lighting requirements for parking facilities and walkways.
2.Refer to Chapter 8 (Compliance Forms, Worksheets and Reference Material) for IES TM-15-11 Table A-1, *California Energy Code* Tables 130.2-A and 130.2-B.
3. Refer to the *California Building Code* for requirements for additions and alterations.

5.106.10 GRADING AND PAVING. Construction plans shall indicate how site grading or a drainage system will manage all surface water flows to keep water from entering buildings. Examples of methods to manage surface water include, but are not limited to, the following:

1. Swales.
2. Water collection and disposal systems.
3. French drains.
4. Water retention gardens.
5. Other water measures which keep surface water away from buildings and aid in groundwater recharge.
Exception: Additions and alterations not altering the drainage path.

5.106.12 SHADE TREES [DSA-SS]. Shade Trees shall be planted to comply with Sections 5.106.12.1, 5.106.12.2, and 5.106.12.3. Percentages shown shall be measured at noon on the summer solstice. Landscape irrigation necessary to establish and maintain tree health shall comply with Section 5.304.6.

5.106.12.1 Surface parking areas. Shade tree plantings, minimum #10 container size or equal, shall be installed to provide shade over 50 percent of the parking area within 15 years.

Exceptions: Surface parking area covered by solar photovoltaic shade structures with roofing materials that comply with Table A5.106.11.2.2 in Appendix A5 shall be permitted in whole or in part in lieu of shade tree planting.

5.106.12.2 Landscape areas. Shade tress plantings, minimum #10 container size or equal shall be installed to provide shade of 20% of the landscape area within 15 years.

Exceptions: Playfields for organized sport activity are not included in the total area calculation.

5.106.12.3. Hardscape areas. Shade tree plantings, minimum #10 container size or equal shall be installed to provide shade over 20 percent of the hardscape area within 15 years.

Exceptions:
1. Walks, hardscape areas covered by solar photovoltaic shade structures or shade structures with roofing materials that comply with Table A5.106.11.2.2 in Appendix A5 shall be permitted in whole or in part in lieu of shade tree planting.
2. Designated and marked play areas of organized sport activity are not included in the total area calculation.

DIVISION 5.2 ENERGY EFFICIENCY
SECTION 5.201 GENERAL

5.201.1 Scope [BSC-CG]. ***California Energy Code [DSA-SS].*** For the purposes of mandatory energy efficiency standards in this code, the California Energy Commission will continue to adopt mandatory building standards.

DIVISION 5.3 WATER EFFICIENCY AND CONSERVATION
SECTION 5.301 GENERAL

5.301.1 Scope. The provisions of this chapter shall establish the means of conserving water use indoors, outdoors and in wastewater conveyance.

SECTION 5.302 DEFINITIONS

5.302.1 Definitions. The following terms are defined in Chapter 2 *(and are included here for reference)*

EVAPOTRANSPIRATION ADJUSTMENT FACTOR (ETAF) [DSA-SS]. An adjustment factor when applied to reference evapotranspiration that adjusts for plant factors and irrigation efficiency, which ae two major influences on the amount of water that needs to be applied to the landscape.

FOOTPRINT AREA [DSA-SS]. The total area of the furthest exterior wall of the structure projected to natural grade, not including exterior areas such as stairs, covered walkways, patios and decks.

METERING FAUCET. A self-closing faucet that dispenses a specific volume of water for each actuation cycle. The volume or cycle duration can be fixed or adjustable.

GRAYWATER. Pursuant to Health and Safety Code Section 17922.12, "graywater" means untreated wastewater that has not been contaminated by any toilet discharge, has not been affected by infectious, contaminated, or unhealthy bodily wastes, and does not present a threat from contamination by unhealthful processing, manufacturing, or operating wastes. "Graywater" includes, but is not limited to wastewater from bathtubs, showers, bathroom washbasins, clothes washing machines and laundry tubs, but does not include waste water from kitchen sinks or dishwashers.

MODEL WATER EFFICIENT LANDSCAPE ORDINANCE (MWELO). The California ordinance regulating landscape design, installation and maintenance practices that will ensure commercial, multifamily and other developer installed landscapes greater than 2500 square feet meet an irrigation water budget developed based on landscaped area and climatological parameters.

MODEL WATER EFFICIENT LANDSCAPE ORDINANCE (MWELO). [HCD] The California model ordinance (California Code of Regulations, Title 23, Division 2, Chapter 2.7), regulating landscape design, installation and maintenance practices. Local agencies are required to adopt the updated MWELO, or adopt a local ordinance at least as effective as the MWELO.

POTABLE WATER. Water that is drinkable and meets the U.S. Environmental Protection Agency (EPA) Drinking Water Standards. See definition in the California Plumbing Code, Part 5.

POTABLE WATER. [HCD] Water that is satisfactory for drinking, culinary, and domestic purposes, and meets the U.S. Environmental Protection Agency (EPA) Drinking Water Standards and the requirements of the Health Authority Having Jurisdiction.

RECYCLED WATER. Water which, as a result of treatment of waste, is suitable for a direct beneficial use or a controlled use that would not otherwise occur [Water Code Section 13050 (n)]. Simply put, recycled water is water treated to remove waste matter attaining a quality that is suitable to use the water again.

SUBMETER. [HCD 1] A secondary device beyond a meter that measures water consumption of an individual rental unit within a multiunit residential structure or mixed-use residential and commercial structure. (See Civic Code Section 1954.202 (g) and Water code Section 517 for additional details.)

WATER BUDGET. Is the estimated total landscape irrigation water use which shall not exceed the maximum applied water allowance calculated in accordance with the Department of Water Resources Model Efficient Landscape Ordinance (MWELO).

DISCLAIMER:*THIS DOCUMENT IS PROVIDED AND INTENDED TO BE USED AS A MEANS TO INDICATE AREAS OF COMPLIANCE WITH THE CALIFORNIA GREEN BUILDING STANDARDS (CALGREEN) CODE. DUE TO THE VARIABLES BETWEEN BUILDING DEPARTMENT JURISDICTIONS, THIS CHECKLIST IS TO BE USED ON AN INDIVIDUAL PROJECT BASIS AND MAY BE MODIFIED BY THE END USER TO MEET THOSE INDIVIDUAL NEEDS. THE END USER ASSUMES ALL RESPONSIBILITY ASSOCIATED WITH THE USE OF THIS DOCUMENT, INCLUDING VERIFICATION WITH THE FULL CODE.*

AGENCY

REVIEWED FOR CODE COMPLIANCE BY:
WILLDAN ENGINEERING
Approval of these plans & specifications shall not be construed to be a permit for, or an approval of any violation of any Federal, State, County or City laws or ordinances. One set of approved plans must be kept on the job until completion.
9:23:31 AM Jul 21, 2025

FLEWELLING & MOODY
architecture planning interiors

HEADQUARTERS OFFICE:
99 S. Lake Avenue, Suite 300
Pasadena, CA 91101
Phone: 323.543.8300
E-Mail: fm-pasadena@flewelling-moody.com

ANTELOPE VALLEY OFFICE:
1035 West Lancaster Boulevard
Lancaster, California 93534
Phone: 661.949.0771
E-Mail: fm-lancaster@flewelling-moody.com

An Employee Owned Corporation

ARCHITECT

LICENSED ARCHITECT — MATT T. GRAD — C-14211 — 06/30/2025 — STATE OF CALIFORNIA

CONSULTANT

Drawn by: Author
Check by: Checker

Revisions

No.	Date	Description

All dimensions must be checked at the job by the contractor who accepts full responsibility for their accuracy under the contract. These plans & the specifications in connection therewith have been prepared for a specific site. Any and all responsibility for their use in whole or in part on any other site is hereby disclaimed by Flewelling & Moody.

CITY OF RIDGECREST

SGT. JOHN PINNEY MEMORIAL POOL REPLACEMENT PROJECT

205 S WARNER ST, RIDGECREST, CA 93555

Drawing Title

GREEN CODE

Job No. 3055-0100
Date 07/14/2025
Sheet No. **T0.03**

2022 CALIFORNIA GREEN BUILDING STANDARDS CODE
NONRESIDENTIAL MANDATORY MEASURES, SHEET 2 (January 2023)

Y = YES
N/A = NOT APPLICABLE
RESPON. PARTY = RESPONSIBLE PARTY (ie: ARCHITECT, ENGINEER, OWNER, CONTRACTOR, INSPECTOR ETC.)

Y	N/A	RESPON. PARTY

SECTION 5.303 INDOOR WATER USE

5.303.1 METERS. Separate submeters or metering devices shall be installed for the uses described in Sections 503.1.1 and 503.1.2.

5.303.1.1 Buildings in excess of 50,000 square feet. Separate submeters shall be installed as follows:

1. For each individual leased, rented or other tenant space within the building projected to consume more than 100 gal/day (380 L/day), including, but not limited to, spaces used for laundry or cleaners, restaurant or food service, medical or dental office, laboratory, or beauty salon or barber shop.
2. Where separate submeters for individual building tenants are unfeasible, for water supplied to the following subsystems:
   a. Makeup water for cooling towers where flow through is greater than 500 gpm (30 L/s).
   b. Makeup water for evaporative coolers greater than 6 gpm (0.04 L/s).
   c. Steam and hot water boilers with energy input more than 500,000 Btu/h (147 kW).

5.303.1.2 Excess consumption. A separate submeter or metering device shall be provided for any tenant within a new building or within an addition that is projected to consume more than 1,000 gal/day.

5.303.3 WATER CONSERVING PLUMBING FIXTURES AND FITTINGS. Plumbing fixtures (water closets and urinals) and fittings (faucets and showerheads) shall comply with the following:

5.303.3.1 Water Closets. The effective flush volume of all water closets shall not exceed 1.28 gallons per flush. Tank-type water closets shall be certified to the performance criteria of the U.S. EPA WaterSense Specification for Tank-Type toilets.

Note: The effective flush volume of dual flush toilets is defined as the composite, average flush volume of two reduced flushes and one full flush.

5.303.3.2 Urinals.

5.303.3.2.1 Wall-mounted Urinals. The effective flush volume of wall-mounted urinals shall not exceed 0.125 gallons per flush.

5.303.3.2.2 Floor-mounted Urinals. The effective flush volume of floor-mounted or other urinals shall not exceed 0.5 gallons per flush.

5.303.3.3 Showerheads. [BSC-CG]

5.303.3.3.1 Single showerhead. Showerheads shall have a maximum flow rate of not more than 1.8 gallons per minute at 80 psi. Showerheads shall be certified to the performance criteria of the U.S. EPA WaterSense Specification for Showerheads.

5.303.3.3.2 Multiple showerheads serving one shower. When a shower is served by more than one showerhead, the combined flow rate of all the showerheads and/or other shower outlets controlled by a single valve shall not exceed 1.8 gallons per minute at 80 psi, or the shower shall be designed to allow only one shower outlet to be in operation at a time.
Note: A hand-held shower shall be considered a showerhead.

5.303.3.4 Faucets and fountains.

5.303.3.4.1 Nonresidential Lavatory faucets. Lavatory faucets shall have a maximum flow rate of not more than 0.5 gallons per minute at 60 psi.

5.303.3.4.2 Kitchen faucets. Kitchen faucets shall have a maximum flow rate of not more than 1.8 gallons per minute at 60 psi. Kitchen faucets may temporarily increase the flow above the maximum rate, but not to exceed 2.2 gallons per minute at 60 psi, and must default to a maximum flow rate of 1.8 gallons per minute at 60 psi.

5.303.3.4.3 Wash fountains. Wash fountains shall have a maximum flow rate of not more than1.8 gallons per minute/20 [rim space (inches) at 60 psi].

5.303.3.4.4 Metering faucets. Metering faucets shall not deliver more than 0.20 gallons per cycle.

5.303.3.4.5 Metering faucets for wash fountains. Metering faucets for wash fountains shall have a maximum flow rate of not more than 0.20 gallons per minute/20 [rim space (inches) at 60 psi].

Note: Where complying faucets are unavailable, aerators or other means may be used to achieve reduction.

5.303.3.4.6 Pre-rinse spray value
When installed, shall meet the requirements in the *California Code of Regulations*, Title 20 (Appliance Efficiency Regulations), Section 1605.1 (h)(4) Table H-2, Section 1605.3 (h)(4)(A), and Section 1607 (d)(7), and shall be equipped with an integral automatic shutoff.

FOR REFERENCE ONLY: The following table and code section have been reprinted from the *California Code of Regulations*, Title 20 (Appliance Efficiency Regulations), Section 1605.1 (h)(4) and Section 1605.3 (h)(4)(A).

TABLE H-2

STANDARDS FOR COMMERCIAL PRE-RINSE SPRAY VALVES MANUFACTURED ON OR AFTER JANUARY 28, 2019

PRODUCT CLASS [spray force in ounce force (ozf)]	MAXIMUM FLOW RATE (gpm)
Product Class 1 (≤ 5.0 ozf)	1.00
Product Class 2 (> 5.0 ozf and ≤ 8.0 ozf)	1.20
Product Class 3 (> 8.0 ozf)	1.28

5.303.4 COMMERCIAL KITCHEN EQUIPMENT.

5.303.4.1 Food Waste Disposers. Disposers shall either modulate the use of water to no more than 1 gpm when the disposer is not in use (not actively grinding food waste/no-load) or shall automatically shut off after no more than 10 minutes of inactivity. Disposers shall use no more than 8 gpm of water.
Note: This code section does not affect local jurisdiction authority to prohibit or require disposer installation.

5.303.5 AREAS OF ADDITION OR ALTERATION. For those occupancies within the authority of the California Building Standards Commission as specified in Section 103, the provisions of Section 5.303.3 and 5.303.4 shall apply to new fixtures in additions or areas of alteration to the building.

5.303.6 STANDARDS FOR PLUMBING FIXTURES AND FITTINGS. Plumbing fixtures and fittings shall be installed in accordance with the *California Plumbing Code*, and shall meet the applicable standards referenced in Table 1701.1 of the *California Plumbing Code* and in Chapter 6 of this code.

SECTION 5.304 OUTDOOR WATER USE

5.304.1 OUTDOOR POTABLE WATER USE IN LANDSCAPE AREAS. Nonresidential developments shall comply with a local water efficient landscape ordinance or the current California Department of Water Resources' Model Water Efficient Landscape Ordinance (MWELO), whichever is more stringent.

Notes:
1. The Model Water Efficient Landscape Ordinance (MWELO) is located in the California Code of Regulations, Title 23, Chapter 2.7, Division 2.
2. MWELO and supporting documents, including a water budget calculator, are available at: https://www.water.ca.gov/.

5.304.6 OUTDOOR POTABLE WATER USE IN LANDSCAPE AREAS. For public schools and community colleges, landscape projects as described in Sections 5.304.6.1 and 5.304.6.2 shall comply with the California Department of Water Resources Model Water Efficient Landscape Ordinance (MWELO) commencing with Section 490 of Chapter 2.7, Division 2, Title 23, *California Code of Regulations*, except that the evapotranspiration adjustment factor (ETAF) shall be 0.65 with an additional water allowance for special landscape areas (SLA) of 0.35.

Exception: Any project with an aggregate landscape area of 2,500 square feet or less may comply with the prescriptive measures contained in Appendix D of the MWELO.

5.304.6.1 Newly constructed landscapes. New construction projects with an aggregate landscape area equal to or greater than 500 square feet.

5.304.6.2 Rehabilitated landscapes. Rehabilitated landscape projects with an aggregate landscape area equal to or greater than 1,200 square feet.

DIVISION 5.4 MATERIAL CONSERVATION AND RESOURCE EFFICIENCY

SECTION 5.401 GENERAL

5.401.1 SCOPE. The provisions of this chapter shall outline means of achieving material conservation and resource efficiency through protection of buildings from exterior moisture, construction waste diversion, employment of techniques to reduce pollution through recycling of materials, and building commissioning or testing and adjusting.

SECTION 5.402 DEFINITIONS

5.402.1 DEFINITIONS. The following terms are defined in Chapter 2 *(and are included here for reference)*

ADJUST. To regulate fluid flow rate and air patterns at the terminal equipment, such as to reduce fan speed or adjust a damper.

BALANCE. To proportion flows within the distribution system, including sub-mains, branches and terminals, according to design quantities.

BUILDING COMMISSIONING. A systematic quality assurance process that spans the entire design and construction process, including verifying and documenting that building systems and components are planned, designed, installed, tested, operated and maintained to meet the owner's project requirements.

ORGANIC WASTE. Food waste, green waste, landscape and pruning wste, nonhazardous wood waste, and food soiled paper waste that is mixed in with food waste.

TEST. A procedure to determine quantitative performance of a system or equipment

SECTION 5.407 WATER RESISTANCE AND MOISTURE MANAGEMENT

5.407.1 WEATHER PROTECTION. Provide a weather-resistant exterior wall and foundation envelope as required by California Building Code Section 1402.2 (Weather Protection), manufacturer's installation instructions or local ordinance, whichever is more stringent.

5.407.2 MOISTURE CONTROL. Employ moisture control measures by the following methods.

5.407.2.1 Sprinklers. Design and maintain landscape irrigation systems to prevent spray on structures.

5.407.2.2 Entries and openings. Design exterior entries and/or openings subject to foot traffic or wind-driven rain to prevent water intrusion into buildings as follows:

5.407.2.2.1 Exterior door protection. Primary exterior entries shall be covered to prevent water intrusion by using nonabsorbent floor and wall finishes within at least 2 feet around and perpendicular to such openings plus at least one of the following:

1. An installed awning at least 4 feet in depth.
2. The door is protected by a roof overhang at least 4 feet in depth.
3. The door is recessed at least 4 feet.
4. Other methods which provide equivalent protection.

5.407.2.2.2 Flashing. Install flashings integrated with a drainage plane.

SECTION 5.408 CONSTRUCTION WASTE REDUCTION, DISPOSAL AND RECYCLING

5.408.1 CONSTRUCTION WASTE MANAGEMENT. Recycle and/or salvage for reuse a minimum of 65% of the non-hazardous construction and demolition waste in accordance with Section 5.408.1.1, 5.408.1.2 or 5.408.1.3; or meet a local construction and demolition waste management ordinance, whichever is more stringent.

5.408.1.1 Construction waste management plan. Where a local jurisdiction does not have a construction and demolition waste management ordinance, submit a construction waste management plan that:

1. Identifies the construction and demolition waste materials to be diverted from disposal by efficient usage, recycling, reuse on the project or salvage for future use or sale.
2. Determines if construction and demolition waste materials will be sorted on-site (source-separated) or bulk mixed (single stream).
3. Identifies diversion facilities where construction and demolition waste material collected will be taken.
4. Specifies that the amount of construction and demolition waste materials diverted shall be calculated by weight or volume, but not by both.

5.408.1.2 Waste Management Company. Utilize a waste management company that can provide verifiable documentation that the percentage of construction and demolition waste material diverted from the landfill complies with this section.

Note: The owner or contractor shall make the determination if the construction and demolition waste material will be diverted by a waste management company.

Exceptions to Sections 5.408.1.1 and 5.408.1.2:

1. Excavated soil and land-clearing debris.
2. Alternate waste reduction methods developed by working with local agencies if diversion or recycle facilities capable of compliance with this item do not exist.
3. Demolition waste meeting local ordinance or calculated in consideration of local recycling facilities and markets.

5.408.1.3 Waste stream reduction alternative. The combined weight of new construction disposal that does not exceed two pounds per square foot of building area may be deemed to meet the 65% minimum requirement as approved by the enforcing agency.

5.408.1.4 Documentation. Documentation shall be provided to the enforcing agency which demonstrates compliance with Sections 5.408.1.1, through 5.408.1.3. The waste management plan shall be updated as necessary and shall be accessible during construction for examination by the enforcing agency.

Notes:

1. Sample forms found in "A Guide to the California Green Building Standards Code (Nonresidential)" located www.dgs.ca.gov/BSC/Resources/Page-Content/Building-Standards-Commission-Resources-List-Folder/CALGreen may be used to assist in documenting compliance with the waste management plan.
2. Mixed construction and demolition debris processors can be located at the California Department of Resources Recycling and Recovery (CalRecycle).

5.408.2 UNIVERSAL WASTE. [A] Additions and alterations to a building or tenant space that meet the scoping provisions in Section 301.3 for nonresidential additions and alterations, shall require verification that Universal Waste items such as fluorescent lamps and ballast and mercury containing thermostats as well as other California prohibited Universal Waste materials are disposed of properly and are diverted from landfills. A list of prohibited Universal Waste materials shall be included in the construction documents.

Note: Refer to the Universal Waste Rule link at: http://www.dtsc.ca.gov/universalwaste/

5.408.3 EXCAVATED SOIL AND LAND CLEARING DEBRIS. 100 percent of trees, stumps, rocks and associated vegetation and soils resulting primarily from land clearing shall be reused or recycled. For a phased project, such material may be stockpiled on site until the storage site is developed.

Exception: Reuse, either on or off-site, of vegetation or soil contaminated by disease or pest infestation.

Notes:

1. If contamination by disease or pest infestation is suspected, contact the County Agricultural Commissioner and follow its direction for recycling or disposal of the material.
2. For a map of know pest and/or disease quarantine zones, consult with the California Department of Food and Agriculture. (www.cdfa.ca.gov)

SECTION 5.410 BUILDING MAINTENANCE AND OPERATIONS

5.410.1 RECYCLING BY OCCUPANTS. Provide readily accessible areas that serve the entire building and are identified for the depositing, storage and collection of non-hazardous materials for recycling, including (at a minimum) paper, corrugated cardboard, glass, plastics, organic waste, and metals or meet a lawfully enacted local recycling ordinance, if more restrictive.

Exception: Rural jurisdictions that meet and apply for the exemption in Public Resources Code 42649.82 (a)(2)(A) et seq. shall also be exempt from the organic waste portion of this section.

5.410.1.1 Additions. All additions conducted within a 12-month period under single or multiple permits, resulting in an increase of 30% or more in floor area, shall provide recycling areas on site.

Exception: Additions within a tenant space resulting in less than a 30% increase in the tenant space floor area.

5.410.1.2 Sample ordinance. Space allocation for recycling areas shall comply with Chapter 18, Part 3, Division 30 of the *Public Resources Code*. Chapter 18 is known as the California Solid Waste Reuse and Recycling Access Act of 1991 (Act).

Note: A sample ordinance for use by local agencies may be found in Appendix A of the document at the CalRecycle's web site.

5.410.2 COMMISSIONING. [N] New buildings 10,000 square feet and over. For new buildings 10,000 square feet and over, building commissioning shall be included in the design and construction processes of the building project to verify that the building systems and components meet the owner's or owner representative's project requirements. Commissioning shall be performed in accordance with this section by trained personnel with experience on projects of comparable size and complexity. For I-occupancies that are not regulated by OSHPD or for I-occupancies and L-occupancies that are not regulated y the California Energy Code Section 100.0 Scope, all requirements in Sections 5.410.2 through 5.410.2.6 shall apply.

Note: For energy-related systems under the scope (Section 100) of the California Energy Code, including heating, ventilation, air conditioning (HVAC) systems and controls, indoor lighting systems and controls, as well as water heating systems and controls, refer to California Energy Code Section 120.8 for commissioning requirements

Commissioning requirements shall include:

1. Owner's or Owner representative's project requirements.
2. Basis of design.
3. Commissioning measures shown in the construction documents.
4. Commissioning plan.
5. Functional performance testing.
6. Documentation and training.
7. Commissioning report.

Exceptions:

1. Unconditioned warehouses of any size.
2. Areas less than 10,000 square feet used for offices or other conditioned accessory spaces within unconditioned warehouses.
3. Tenant improvements less than 10,000 square feet as described in Section 303.1.1.
4. Open parking garages of any size, or open parking garage areas, of any size, within a structure.

Note: For the purposes of this section, unconditioned shall mean a building, area, or room which does not provide heating and or air conditioning.

Informational Notes:

1. IAS AC 476 is an accreditation criteria for organizations providing training and/or certification of commissioning personnel. AC 476 is available to the Authority Having Jurisdiction as a reference for qualifications of commissioning personnel. AC 476 des not certify individuals to conduct functional performance tests or to adjust and balance systems.
2. Functional performance testing for heating, ventilation, air conditioning systems and lighting controls must be performed in compliance with the *California Energy Code*.

5.410.2.1 Owner's or Owner Representative's Project Requirements (OPR). [N] The expectations and requirements of the building appropriate to its phase shall be documented before the design phase of the project begins. This documentation shall include the following:
1. Environmental and sustainability goals.
2. Building sustainable goals.
3. Indoor environmental quality requirements.
4. Project program, including facility functions and hours of operation, and need for after hours operation.
5. Equipment and systems expectations.
6. Building occupant and operation and maintenance (O&M) personnel expectations.

5.410.2.2 Basis of Design (BOD). [N] A written explanation of how the design of the building systems meets the OPR shall be completed at the design phase of the building project. The Basis of Design document shall cover the following systems:

1. Renewable energy systems.
2. Landscape irrigation systems.
3. Water reuse system.

5.410.2.3 Commissioning plan. [N] Prior to permit issuance a commissioning plan shall be completed to document how the project will be commissioned. The commissioning plan shall include the following:
1. General project information.
2. Commissioning goals.
3. Systems to be commissioned. Plans to test systems and components shall include:
   a. An explanation of the original design intent.
   b. Equipment and systems to be tested, including the extent of tests.
   c. Functions to be tested.
   d. Conditions under which the test shall be performed.
   e. Measurable criteria for acceptable performance.
4. Commissioning team information.
5. Commissioning process activities, schedules and responsibilities. Plans for the completion of commissioning shall be included.

5.410.2.4 Functional performance testing. [N] Functional performance tests shall demonstrate the correct installation and operation of each component, system and system-to-system interface in accordance with the approved plans and specifications. Functional performance testing reports shall contain information addressing each of the building components tested, the testing methods utilized, and include any readings and adjustments made.

5.410.2.5 Documentation and training. [N] A Systems Manual and Systems Operations Training are required, including Occupational Safety and Health Act (OSHA) requirements in *California Code of Regulations* (CCR), Title 8, Section 5142, and other related regulations.

5.410.2.5.1 Systems manual. [N] Documentation of the operational aspects of the building shall be completed within the systems manual and delivered to the building owner or representative. The systems manual shall include the following:
1. Site information, including facility description, history and current requirements.
2. Site contact information.
3. Basic operations and maintenance, including general site operating procedures, basic troubleshooting, recommended maintenance requirements, site events log.
4. Major systems.
5. Site equipment inventory and maintenance notes.
6. A copy of verifications required by the enforcing agency or this code.
7. Other resources and documentation, if applicable.

5.410.2.5.2 Systems operations training. [N] A program for training of the appropriate maintenance staff for each equipment type and/or system shall be developed and documented in the commissioning report and shall include the following:
1. System/equipment overview (what it is, what it does and with what other systems and/or equipment it interfaces).
2. Review and demonstration of servicing/preventive maintenance.
3. Review of the information in the Systems Manual.
4. Review of the record drawings on the system/equipment.

5.410.2.6 Commissioning report. [N] A report of commissioning process activities undertaken through the design and construction phases of the building project shall be completed and provided to the owner or representative.

5.410.4 TESTING AND ADJUSTING. New buildings less than 10,000 square feet. Testing and adjusting of systems shall be required for new buildings less than 10,000 square feet or new systems to serve an addition or alteration subject to Section 303.1.

5.410.4.2 (Reserved)

Note: For energy-related systems under the scope (Section 100) of the California Energy Code, including heating, ventilation, air conditioning (HVAC) systems and controls, indoor lighting system and controls, as well as water heating systems and controls, refer to California Energy Code Section 120.8 for commissioning requirements and Sections 120.5, 120.6, 130.4, and 140.9(b)3 for additional testing requirements of specific systems.

5.410.4.2 Systems. Develop a written plan of procedures for testing and adjusting systems. Systems to be included for testing and adjusting shall include at a minimum, as applicable to the project:

1. Renewable energy systems.
2. Landscape irrigation systems.
3. Water reuse systems.

5.410.4.3 Procedures. Perform testing and adjusting procedures in accordance with manufacturer's specifications and applicable standards on each system.

5.410.4.3.1 HVAC balancing. In addition to testing and adjusting, before a new space-conditioning system serving a building or space is operated for normal use, the system shall be balanced in accordance with the procedures defined by the Testing Adjusting and Balancing Bureau National Standards; the National Environmental Balancing Bureau Procedural Standards; Associated Air Balance Council National Standards or as approved by the enforcing agency.

5.410.4.4 Reporting. After completion of testing, adjusting and balancing, provide a final report of testing signed by the individual responsible for performing these services.

5.410.4.5 Operation and maintenance (O & M) manual. Provide the building owner or representative with detailed operating and maintenance instructions and copies of guaranties/warranties for each system. O & M instructions shall be consistent with OSHA requirements in CCR, Title 8, Section 5142, and other related regulations.

5.410.4.5.1 Inspections and reports. Include a copy of all inspection verifications and reports required by the enforcing agency.

DIVISION 5.5 ENVIRONMENTAL QUALITY

SECTION 5.501 GENERAL

5.501.1 SCOPE. The provisions of this chapter shall outline means of reducing the quantity of air contaminants that are odorous, irritating, and/or harmful to the comfort and well-being of a building's installers, occupants and neighbors.

SECTION 5.502 DEFINITIONS

5.502.1 DEFINITIONS. The following terms are defined in Chapter 2 *(and are included here for reference)*

ARTERIAL HIGHWAY. A general term denoting a highway primarily for through traffic usually on a continuous route.

A-WEIGHTED SOUND LEVEL (dBA). The sound pressure level in decibels as measured on a sound level meter using the internationally standardized A-weighting filter or as computed from sound spectral data to which A-weighting adjustments have been made.

1 BTU/HOUR. British thermal units per hour, also referred to as Btu. The amount of heat required to raise one pound of water one degree Fahrenheit per hour, a common measure of heat transfer rate. A ton of refrigeration is 12,000 Btu, the amount of heat required to melt a ton (2,000 pounds) of ice at 32° Fahrenheit.

COMMUNITY NOISE EQUIVALENT LEVEL (CNEL). A metric similar to the day-night average sound level (Ldn), except that a 5 decibel adjustment is added to the equivalent continuous sound exposure level for evening hours (7pm to 10pm) in addition to the 10 dB nighttime adjustment used in the Ldn.

COMPOSITE WOOD PRODUCTS. Composite wood products include hardwood plywood, particleboard and medium density fiberboard. "Composite wood products" does not include hardboard, structural plywood, structural panels, structural composite lumber, oriented strand board, glued laminated timber, timber, prefabricated wood I–joists or finger–jointed lumber, all as specified in California Code of Regulations (CCR), Title 17, Section 93120.1(a).

Note: See CCR, Title 17, Section 93120.1.

DAY-NIGHT AVERAGE SOUND LEVEL (Ldn). The A-weighted equivalent continuous sound exposure level for a 24-hour period with a 10 dB adjustment added to sound levels occurring during nighttime hours (10p.m. to 7 a.m.).

DECIBEL (db). A measure on a logarithmic scale of the magnitude of a particular quantity (such as sound pressure, sound power, sound intensity) with respect to a reference quantity.

ELECTRIC VEHICLE (EV). An automotive-type vehicle for on-road use, such as passenger automobiles, buses, trucks, vans, neighborhood electric vehicles, electric motorcycles, and the like, primarily powered by an electric motor that draws current from a rechargeable storage battery, fuel cell, photovoltaic array, or other source of electric current. Plug-in hybrid electric vehicles (PHEV) are considered electric vehicles. For purposes of the *California Electrical Code*, off-road, self-propelled electric vehicles, such as industrial trucks, hoists, lifts, transports, golf carts, airline ground support equipment, tractors, boats, and the like, are not included.

ELECTRIC VEHICLE CHARGING STATION(S) (EVCSj). One or more spaces intended for charging electric vehicles.

ELECTRIC VEHICLE SUPPLY EQUIPMENT (EVSE). The conductors, including the ungrounded, grounded, and equipment grounding conductors and the electric vehicle connectors, attachment plugs, and all other fittings, devices, power outlets, or apparatus installed specifically for the purpose of transferring energy between the premises wiring and the electric vehicle.

ENERGY EQUIVALENT (NOISE) LEVEL (Leq). The level of a steady noise which would have the same energy as the fluctuating noise level integrated over the time of period of interest.

EXPRESSWAY. An arterial highway for through traffic which may have partial control of access, but which may or may not be divided or have grade separations at intersections.

FREEWAY. A divided arterial highway with full control of access and with grade separations at intersections.

GLOBAL WARMING POTENTIAL (GWP). The radiative forcing impact of one mass-based unit of a given greenhouse gas relative to an equivalent unit of carbon dioxide over a given period of time. Carbon dioxide is the reference compound with a GWP of one.

GLOBAL WARMING POTENTIAL VALUE (GWP VALUE). A 100-year GWP value published by the Intergovernmental Panel on Climate Change (IPCC) in either its Second Assessment Report (SAR) (IPCC, 1995); or its Fourth Assessment A-3 Report (AR4) (IPCC, 2007). The SAR GWP values are found in column "SAR (100-yr)" of Table 2.14.; the AR4 GWP values are found in column "100 yr" of Table 2.14.

HIGH-GWP REFRIGERANT. A compound used as a heat transfer fluid or gas that is: (a) a chlorofluorocarbon, a hdrochlorofluorocarbon, a hydrofluorocarbon, a perfluorocarbon, or any compound or blend of compounds, with a GWP value equal to or greater than 150, or (B) any ozone depleting substance as defined in Title 40 of the Code of Federal Regulations, Part 82, sec.82.3 (as amended March 10, 2009).

LONG RADIUS ELBOW. Pipe fitting installed between two lengths of pipe or tubing to allow a change of direction, with a radius 1.5 times the pipe diameter.

LOW-GWP REFRIGERANT. A compound used as a heat transfer fluid or gas that: (A) has a GWP value less than 150, and (B) is not an ozone depleting substance as defined in Title 40 of the Code of Federal Regulations, Part 82, sec.82.3 (as amended March 10, 2009).

MERV. Filter minimum efficiency reporting value, based on ASHRAE 52.2–1999.

MAXIMUM INCREMENTAL REACTIVITY (MIR). The maximum change in weight of ozone formed by adding a compound to the "Base REactive Organic Gas (ROG) Mixture" per weight of compound added, expressed to hundreths of a gram (g O^3/g ROC).

PRODUCT-WEIGHTED MIR (PWMIR). The sum of all weighted-MIR for all ingredients in a product subject to this article. The PWMIR is the total product reactivity expressed to hundredths of a gram of ozone formed per gram of product (excluding container and packaging).

PSIG. Pounds per square inch, guage.

REACTIVE ORGANIC COMPOUND (ROC). Any compound that has the potential, once emitted, to contribute to ozone formation in the troposphere.

SCHRADER ACCESS VALVES. Access fittings with a valve core installed.

SHORT RADIUS ELBOW. Pipe fitting installed between two lengths of pipe or tubing to allow a change of direction, with a radius 1.0 times the pipe diameter.

SUPERMARKET. For the purposes of Section 5.508.2, a supermarket is any retail food facility with 8,000 square feet or more conditioned area, and that utilizes either refrigerated display cases, or walk-in coolers or freezers connected to remote compressor units or condensing units.

VOC. A volatile organic compound broadly defined as a chemical compound based on carbon chains or rings with vapor pressures greater than 0.1 millimeters of mercury at room temperature. These compounds typically contain hydrogen and may contain oxygen, nitrogen and other elements. See CCR Title 17, Section 94508(a)

Note: Where specific regulations are cited from different agencies such as SCAQMD, ARB, etc., the VOC definition included in that specific regulation is the one that prevails for the specific measure in question.

SECTION 5.503 FIREPLACES

5.503.1 FIREPLACES. Install only a direct-vent sealed-combustion gas or sealed wood-burning fireplace, or a sealed woodstove or pellet stove, and refer to residential requirements in the California Energy Code, Title 24, Part 6, Subchapter 7, Section 150. Woodstoves, pellet stoves and fireplaces shall comply with applicable local ordinances.

5.503.1.1 Woodstoves. Woodstoves and pellet stoves shall comply with U.S. EPA New Source Performance Standards (NSPS) emission limits as applicable, and shall have a permanent label indicating they are certified to meet the emission limits.

SECTION 5.504 POLLUTANT CONTROL

5.504.1 TEMPORARY VENTILATION. The permanent HVAC system shall only be used during construction if necessary to condition the building or areas of addition or alteration within the required temperature range for material and equipment installation. If the HVAC system is used during construction, use return air filters with a Minimum Efficiency Reporting Value (MERV) of 8, based on ASHRAE 52.2-1999, or an average efficiency of 30% based on ASHRAE 52.1-1992 Replace all filters immediately prior to occupancy, or, if the building is occupied during alteration, at the conclusion of construction.

5.504.3 Covering of duct openings and protection of mechanical equipment during construction. At the time of rough installation and during storage on the construction site until final startup of the heating, cooling and ventilation equipment, all duct and other related air distribution component openings shall be covered with tape, plastic, sheetmetal or other methods acceptable to the enforcing agency to reduce the amount of dust, water and debris which may enter the system.

DISCLAIMER: *THIS DOCUMENT IS PROVIDED AND INTENDED TO BE USED AS A MEANS TO INDICATE AREAS OF COMPLIANCE WITH THE CALIFORNIA GREEN BUILDING STANDARDS (CALGREEN) CODE. DUE TO THE VARIABLES BETWEEN BUILDING DEPARTMENT JURISDICTIONS, THIS CHECKLIST IS TO BE USED ON AN INDIVIDUAL PROJECT BASIS AND MAY BE MODIFIED BY THE END USER TO MEET THOSE INDIVIDUAL NEEDS. THE END USER ASSUMES ALL RESPONSIBILITY ASSOCIATED WITH THE USE OF THIS DOCUMENT, INCLUDING VERIFICATION WITH THE FULL CODE.*

AGENCY

REVIEWED FOR CODE COMPLIANCE BY: WILLDAN ENGINEERING

Approval of these plans & specifications shall not be construed to be a permit for, or an approval of any violation of any Federal, State, County or City laws or ordinances. One set of approved plans must be kept on the job until completion.

9:23:32 AM Jul 21, 2025

FLEWELLING & MOODY
architecture planning interiors

HEADQUARTERS OFFICE:
99 S. Lake Avenue, Suite 300
Pasadena, CA 91101
Phone: 323.543.8300
E-Mail: fm-pasadena@flewelling-moody.com

ANTELOPE VALLEY OFFICE:
1035 West Lancaster Boulevard
Lancaster, California 93534
Phone: 661.949.0771
E-Mail: fm-lancaster@flewelling-moody.com

An Employee Owned Corporation

ARCHITECT

LICENSED ARCHITECT — MATTHEW T. GARDNER — C-14211 — 06/30/2026 — STATE OF CALIFORNIA

CONSULTANT

Drawn by: Author
Check by: Checker

Revisions

No.	Date	Description

All dimensions must be checked at the job by the contractor who accepts full responsibility for their accuracy under the contract. These plans & the specifications in connection therewith have been prepared for a specific site. Any and all responsibility for their use in whole or in part on any other site is hereby disclaimed by Flewelling & Moody.

CITY OF RIDGECREST

SGT. JOHN PINNEY MEMORIAL POOL REPLACEMENT PROJECT

205 S WARNER ST, RIDGECREST, CA 93555

Drawing Title

GREEN CODE

Job No. 3055-0100
Date 07/14/2025
Sheet No. **T0.04**

AIA California

2022 CALIFORNIA GREEN BUILDING STANDARDS CODE

NONRESIDENTIAL MANDATORY MEASURES, SHEET 3 (January 2023)

Y = YES
N/A = NOT APPLICABLE
RESPON. PARTY = RESPONSIBLE PARTY (ie: ARCHITECT, ENGINEER, OWNER, CONTRACTOR, INSPECTOR ETC.)

5.504.4 FINISH MATERIAL POLLUTANT CONTROL. Finish materials shall comply with Sections 5.504.4.1 through 5.504.4.6.

5.504.4.1 Adhesives, sealants and caulks. Adhesives, sealants, and caulks used on the project shall meet the requirements of the following standards:

1. Adhesives, adhesive bonding primers, adhesive primers, sealants, sealant primers and caulks shall comply with local or regional air pollution control or air quality management district rules where applicable, or SCAQMD Rule 1168 VOC limits, as shown in Tables 5.504.4.1 and 5.504.4.2. Such products also shall comply with the Rule 1168 prohibition on the use of certain toxic compounds (chloroform, ethylene dichloride, methylene chloride, perchloroethylene and trichloroethylene), except for aerosol products as specified in subsection 2, below.

2. Aerosol adhesives, and smaller unit sizes of adhesives, and sealant or caulking compounds (in units of product, less packaging, which do not weigh more than one pound and do not consist of more than 16 fluid ounces) shall comply with statewide VOC standards and other requirements, including prohibitions on use of certain toxic compounds, of *California Code of Regulations*, Title 17, commencing with Section 94507.

TABLE 5.504.4.1 - ADHESIVE VOC LIMIT[1,2]

Less Water and Less Exempt Compounds in Grams per Liter

ARCHITECTURAL APPLICATIONS	CURRENT VOC LIMIT
INDOOR CARPET ADHESIVES	50
CARPET PAD ADHESIVES	50
OUTDOOR CARPET ADHESIVES	150
WOOD FLOORING ADHESIVES	100
RUBBER FLOOR ADHESIVES	60
SUBFLOOR ADHESIVES	50
CERAMIC TILE ADHESIVES	65
VCT & ASPHALT TILE ADHESIVES	50
DRYWALL & PANEL ADHESIVES	50
COVE BASE ADHESIVES	50
MULTIPURPOSE CONSTRUCTION ADHESIVES	70
STRUCTURAL GLAZING ADHESIVES	100
SINGLE-PLY ROOF MEMBRANE ADHESIVES	250
OTHER ADHESIVES NOT SPECIFICALLY LISTED	50
SPECIALTY APPLICATIONS	
PVC WELDING	510
CPVC WELDING	490
ABS WELDING	325
PLASTIC CEMENT WELDING	250
ADHESIVE PRIMER FOR PLASTIC	550
CONTACT ADHESIVE	80
SPECIAL PURPOSE CONTACT ADHESIVE	250
STRUCTURAL WOOD MEMBER ADHESIVE	140
TOP & TRIM ADHESIVE	250
SUBSTRATE SPECIFIC APPLICATIONS	
METAL TO METAL	30
PLASTIC FOAMS	50
POROUS MATERIAL (EXCEPT WOOD)	50
WOOD	30
FIBERGLASS	80

1. IF AN ADHESIVE IS USED TO BOND DISSIMILAR SUBSTRATES TOGETHER, THE ADHESIVE WITH THE HIGHEST VOC CONTENT SHALL BE ALLOWED.

2. FOR ADDITIONAL INFORMATION REGARDING METHODS TO MEASURE THE VOC CONTENT SPECIFIED IN THIS TABLE, SEE SOUTH COAST AIR QUALITY MANAGEMENT DISTRICT RULE 1168, www.arb.ca.gov/DRDB/SC/CURHTML/R1168.PDF

TABLE 5.504.4.2 - SEALANT VOC LIMIT

Less Water and Less Exempt Compounds in Grams per Liter

SEALANTS	CURRENT VOC LIMIT
ARCHITECTURAL	250
MARINE DECK	760
NONMEMBRANE ROOF	300
ROADWAY	250
SINGLE-PLY ROOF MEMBRANE	450
OTHER	420
SEALANT PRIMERS	
ARCHITECTURAL	
NONPOROUS	250
POROUS	775
MODIFIED BITUMINOUS	500
MARINE DECK	760
OTHER	750

NOTE: FOR ADDITIONAL INFORMATION REGARDING METHODS TO MEASURE THE VOC CONTENT SPECIFIED IN THESE TABLES, SEE SOUTH COAST AIR QUALITY MANAGEMENT DISTRICT RULE 1168.

5.504.4.3 Paints and coatings. Architectural paints and coatings shall comply with VOC limits in Table 1 of the ARB Architectural Coatings Suggested Control Measure, as shown in Table 5.504.4.3, unless more stringent local limits apply. The VOC content limit for coatings that do not meet the definitions for the specialty coatings categories listed in Table 5.504.4.3 shall be determined by classifying the coating as a Flat, Nonflat or Nonflat-High Gloss coating, based on its gloss, as defined in Subsections 4.21, 4.36 and 4.37 of the 2007 California Air Resources Board Suggested Control Measure, and the corresponding Flat, Nonflat or Nonflat-High Gloss VOC limit in Table 5.504.4.3 shall apply.

5.504.4.3.1 Aerosol Paints and coatings. Aerosol paints and coatings shall meet the PWMIR Limits for ROC in Section 94522(a)(3) and other requirements, including prohibitions on use of certain toxic compounds and ozone depleting substances, in Sections 94522(c)(2) and (d)(2) of *California Code of Regulations*, Title 17, commencing with Section 94520; and in areas under the jurisdiction of the Bay Area Air Quality Management District additionally comply with the percent VOC by weight of product limits of Regulation 8 Rule 49.

TABLE 5.504.4.3 - CONT.

GRAMS OF VOC PER LITER OF COATING, LESS WATER & LESS EXEMPT COMPOUNDS

COATING CATEGORY	CURRENT VOC LIMIT
SPECIALTY COATINGS	
ALUMINUM ROOF COATINGS	400
BASEMENT SPECIALTY COATINGS	400
BITUMINOUS ROOF COATINGS	50
BITUMINOUS ROOF PRIMERS	350
BOND BREAKERS	350
CONCRETE CURING COMPOUNDS	350
CONCRETE/MASONRY SEALERS	100
DRIVEWAY SEALERS	50
DRY FOG COATINGS	150
FAUX FINISHING COATINGS	350
FIRE RESISTIVE COATINGS	350
FLOOR COATINGS	100
FORM-RELEASE COMPOUNDS	250
GRAPHIC ARTS COATINGS (SIGN PAINTS)	500
HIGH-TEMPERATURE COATINGS	420
INDUSTRIAL MAINTENANCE COATINGS	250
LOW SOLIDS COATINGS[1]	120
MAGNESITE CEMENT COATINGS	450
MASTIC TEXTURE COATINGS	100
METALLIC PIGMENTED COATINGS	500
MULTICOLOR COATINGS	250
PRETREATMENT WASH PRIMERS	420
PRIMERS, SEALERS, & UNDERCOATERS	100
REACTIVE PENETRATING SEALERS	350
RECYCLED COATINGS	250
ROOF COATINGS	50
RUST PREVENTATIVE COATINGS	250
SHELLACS:	
CLEAR	730
OPAQUE	550
SPECIALTY PRIMERS, SEALERS & UNDERCOATERS	100
STAINS	250
STONE CONSOLIDANTS	450
SWIMMING POOL COATINGS	340
TRAFFIC MARKING COATINGS	100
TUB & TILE REFINISH COATINGS	420
WATERPROOFING MEMBRANES	250
WOOD COATINGS	275
WOOD PRESERVATIVES	350
ZINC-RICH PRIMERS	340

1. GRAMS OF VOC PER LITER OF COATING, INCLUDING WATER & EXEMPT COMPOUNDS

2. THE SPECIFIED LIMITS REMAIN IN EFFECT UNLESS REVISED LIMITS ARE LISTED IN SUBSEQUENT COLUMNS IN THE TABLE.

3. VALUES IN THIS TABLE ARE DERIVED FROM THOSE SPECIFIED BY THE CALIFORNIA AIR RESOURCES BOARD, ARCHITECTURAL COATINGS SUGGESTED CONTROL MEASURE, FEB. 1, 2008. MORE INFORMATION IS AVAILABLE FROM THE AIR RESOURCES BOARD.

5.504.4.3.2 Verification. Verification of compliance with this section shall be provided at the request of the enforcing agency. Documentation may include, but is not limited to, the following:

1. Manufacturer's product specification
2. Field verification of on-site product containers

5.504.4.4 Carpet Systems.
All carpet installed in the building interior shall meet the requirements of the California Department of Public Health, "Standard Method for the Testing and Evaluation of Volatile Organic Chemical Emissions from Indoor Sources Using Environmental Chambers." Version 1.2, January 2017 (Emission testing method for California Specifications 01350).

See California Department of Public Health's website for certification programs and testing labs. https://www.cdph.ca.gov/Programs/CCDPHP/DEODC/EHLB/IAQ/Pages/VOC.aspx#material

5.504.4.4.1 Carpet cushion. All carpet cushion installed in the building interior shall meet the requirements of the California Department of Public Health,"Standard Method for the Testing and Evaluation of Volatile Organic Chemical Emissions from Indoor Sources Using Environmental Chambers,"Version 1.2, January 2017 (Emission testing method for California Specifications 01350).

See California Department of Public Health's website for certification programs and testing labs. https://www.cdph.ca.gov/Programs/CCDPHP/DEODC/EHLB/IAQ/Pages/VOC.aspx#material

5.504.4.4.2 Carpet adhesive. All carpet adhesive shall meet the requirements of Table 5.504.4.1.

5.504.4.5 Composite wood products. Hardwood plywood, particleboard and medium density fiberboard composite wood products used on the interior or exterior of the buildings shall meet the requirements for formaldehyde as specified in ARB's Air Toxics Control Measure (ATCM) for Composite Wood (17 CCR 93120 et seq.). Those materials not exempted under the ATCM must meet the specified emission limits, as shown in Table 5.504.4.5.

5.504.4.5.3 Documentation. Verification of compliance with this section shall be provided as requested by the enforcing agency. Documentation shall include at least one of the following:

1. Product certifications and specifications.
2. Chain of custody certifications.
3. Product labeled and invoiced as meeting the Composite Wood Products regulation (see CCR, Title 17, Section 93120, et seq.).
4. Exterior grade products marked as meeting the PS-1 or PS-2 standards of the Engineered Wood Association, the Australian AS/NZS 2269 or European 636 3S standards.
5. Other methods acceptable to the enforcing agency.

TABLE 5.504.4.5 - FORMALDEHYDE LIMITS[1]

MAXIMUM FORMALDEHYDE EMISSIONS IN PARTS PER MILLION

PRODUCT	CURRENT LIMIT
HARDWOOD PLYWOOD VENEER CORE	0.05
HARDWOOD PLYWOOD COMPOSITE CORE	0.05
PARTICLE BOARD	0.09
MEDIUM DENSITY FIBERBOARD	0.11
THIN MEDIUM DENSITY FIBERBOARD[2]	0.13

1. VALUES IN THIS TABLE ARE DERIVED FROM THOSE SPECIFIED BY THE CALIFORNIA AIR RESOURCES BOARD, AIR TOXICS CONTROL MEASURE FOR COMPOSITE WOOD AS TESTED IN ACCORDANCE WITH ASTM E 1333. FOR ADDITIONAL INFORMATION, SEE CALIFORNIA CODE OF REGULATIONS, TITLE 17, SECTIONS 93120 THROUGH 93120.12.

2. THIN MEDIUM DENSITY FIBERBOARD HAS A MAXIMUM THICKNESS OF 5/16 INCHES (8 MM).

5.504.4.6 Resilient flooring systems. Where resilient flooring is installed, at least 80 percent of floor area receiving resilient flooring shall meet the requirements of the California Department of Public Health,"Standard Method for the Testing and Evaluation of Volatile Organic Chemical Emissions from Indoor Sources Using Environmental Chambers," Version 1.2, January 2017 (Emission testing method for California Specifications 01350)

See California Department of Public Health's website for certification programs and testing labs. https://www.cdph.ca.gov/Programs/CCDPHP/DEODC/EHLB/IAQ/Pages/VOC.aspx#material

5.504.4.6.1 Verification of compliance. Documentation shall be provided verifying that resilient flooring materials meet the pollutant emission limits.

5.504.4.7 Thermal insulation
Comply with the requirements of the California Department of Public Health, "Standard Method of the Testing and Evaluation of Volatile Organic Chemical Emissions from Indoor Sources Using Environmental Chambers, "Version 1.2, January 1.2, January 2017 (Emission testing method for California Specification 01350).
See California Department of Public Health's website for certification programs and testing labs. https://www.cdph.ca.gov/Programs/CCDPHP/DEODC/EHLB/IAQ/Pages/VOC.aspx#material

5.504.4.7.1 Verification of compliance.
Documentation shall be provided verifying that thermal insulation materials meet the pollutant emission limits.

5.504.4.8 Acoustical ceiling and wall panels.
Comply with the requirements of the California Department of Public Health, "Standard Method for the Testing and Evaluation of Volatile Organic Chemical Emissions from Indoor Sources Using Environmental Chambers, " Version 1.2, January 2017 (Emission testing method for California Specification 01350).
See California Department of Public Health's website for certification programs and testing labs.

5.504.4.8.1 Verification of compliance. Documentation shall be provided verifying that acoustical finish materials meet the pollutant emission limits.

5.504.5.3 Filters. In mechanically ventilated buildings, provide regularly occupied areas of the building with air filtration media for outside and return air that provides at least a Minimum Efficiency Reporting Value (MERV) of 13. MERV 13 filters shall be installed prior to occupancy, and recommendations for maintenance with filters of the same value shall be included in the operation and maintenance manual.

Exceptions: Existing mechanical equipment.

5.504.5.3.1 Labeling. Installed filters shall be clearly labeled by the manufacturer indicating the MERV rating.

5.504.7 ENVIRONMENTAL TOBACCO SMOKE (ETS) CONTROL. Where outdoor areas are provided for smoking, prohibit smoking within 25 feet of building entries, outdoor air intakes and operable windows and within the building as already prohibited by other laws or regulations; or as enforced by ordinances, regulations or policies of any city, county, city and county, California Community College, campus of the California State University, or campus of the University of California, whichever are more stringent. When ordinances, regulations or policies are not in place, post signage to inform building occupants of the prohibitions.

SECTION 5.505 INDOOR MOISTURE CONTROL

5.505.1 INDOOR MOISTURE CONTROL. Buildings shall meet or exceed the provisions of California Building Code, CCR, Title 24, Part 2, Sections 1202 (Ventilation) and Chapter 14 (Exterior Walls). For additional measures, see Section 5.407.2 of this code.

SECTION 5.506 INDOOR AIR QUALITY

5.506.1 OUTSIDE AIR DELIVERY. For mechanically or naturally ventilated spaces in buildings, meet the minimum requirements of Section 120.1 (Requirements For Ventilation) of the *California Energy Code*, or the applicable local code, whichever is more stringent, and Division 1, Chapter 4 of CCR, Title 8.

5.506.2 CARBON DIOXIDE (CO_2) MONITORING. For buildings or additions equipped with demand control ventilation, CO_2 sensors and ventilation controls shall be specified and installed in accordance with the requirements of the California Energy Code, Section 120(c)(4).

5.506.3 Carbon dioxide (CO2) monitoring in classrooms.
(DSA-SS) Each public K-12 school classroom, as listed in Table 120.1-A of the *California Energy Code,* shall be equipped with a carbon dioxide monitor or sensor that meets the following requirements:

1. The monitor or sensor shall be permanently affixed in a tamper-proof manner in each classroom between 3 and 6 feet (914 mm and 1829 mm) above the floor and at least 5 feet (1524 mm) away from door and operable windows.
2. When the monitor or sensor is not integral to an Energy Management Control System (EMCS), the monitor or sensor shall display the carbon dioxide readings on the device. When the sensor is integral to an EMCS, the carbon dioxide readings shall be available to and regularly monitored by facility personnel.
3. A monitor shall provide notification though a visual indicator on the monitor when the carbon dioxide levels in the classroom have exceeded 1,100ppm. A sensor integral to an EMCS shall provide notification to facility personnel through a visual and/or audible indicator when the carbon dioxide levels in the classroom have exceeded 1,100ppm.
4. The monitor or sensor shall measure carbon dioxide levels at minimum 15- minute intervals and shall maintain a record of previous carbon dioxide measurements of not less than 30 days duration.
5. The monitor or sensor used to measure carbon dioxide levels shall have the capacity to measure carbon dioxide levels with a range of 400ppm to 2000ppm or greater.
6. The monitor or sensor shall be certified by the manufacturer to be accurate within 75ppm at 1,000ppm carbon dioxide concentration and shall be certified by the manufacturer to require calibration no more frequently than once every 5 years.

SECTION 5.507 ENVIRONMENTAL COMFORT

5.507.4 ACOUSTICAL CONTROL. Employ building assemblies and components with Sound Transmission Class (STC) values determined in accordance with ASTM E 90 and ASTM E 413, or Outdoor-Indoor Sound Transmission Class (OITC) determined in accordance with ASTM E 1332, using either the prescriptive or performance method in Section 5.507.4.1 or 5.507.4.2.

Exception: Buildings with few or no occupants or where occupants are not likely to be affected by exterior noise, as determined by the enforcement authority, such as factories, stadiums, storage, enclosed parking structures and utility buildings.

Exception: [DSA-SS] For public schools and community colleges, the requirements of this section and all subsections apply only to new construction.

5.507.4.1 Exterior noise transmission, prescriptive method. Wall and roof-ceiling assemblies exposed to the noise source making up the building or addition envelope or altered envelope shall meet a composite STC rating of at least 50 or a composite OITC rating of no less than 40, with exterior windows of a minimum STC of 40 or OITC of 30 in the following locations:

1. Within the 65 CNEL noise contour of an airport.

   Exceptions:

   1. L_{dn} or CNEL for military airports shall be determined by the facility Air Installation Compatible Land Use Zone (AICUZ) plan.
   2. L_{dn} or CNEL for other airports and heliports for which a land use plan has not been developed shall be determined by the local general plan noise element.

2. Within the 65 CNEL or L_{dn} noise contour of a freeway or expressway, railroad, industrial source or fixed-guideway source as determined by the Noise Element of the General Plan.

5.507.4.1.1. Noise exposure where noise contours are not readily available. Buildings exposed to a noise level of 65 dB L_{eq} -1-hr during any hour of operation shall have building, addition or alteration exterior wall and roof-ceiling assemblies exposed to the noise source meeting a composite STC rating of at least 45 (or OITC 35), with exterior windows of a minimum STC of 40 (or OITC 30).

5.507.4.2 Performance Method. For buildings located as defined in Section 5.507.4.1 or 5.507.4.1.1, wall and roof-ceiling assemblies exposed to the noise source making up the building or addition envelope or altered envelope shall be constructed to provide an interior noise environment attributable to exterior sources that does not exceed an hourly equivalent noise level (Leq-1Hr) of 50 dBA in occupied areas during any hour of operation.

5.507.4.2.1 Site Features. Exterior features such as sound walls or earth berms may be utilized as appropriate to the building, addition or alteration project to mitigate sound migration to the interior.

5.507.4.2.2 Documentation of Compliance. An acoustical analysis documenting complying interior sound levels shall be prepared by personnel approved by the architect or engineer of record.

5.507.4.3 Interior sound transmission. Wall and floor-ceiling assemblies separating tenant spaces and tenant spaces and public places shall have an STC of at least 40.

Note: Examples of assemblies and their various STC ratings may be found at the California Office of Noise Control: www.toolbase.org/PDF/CaseStudies/stc_icc_ratings.pdf.

SECTION 5.508 OUTDOOR AIR QUALITY

5.508.1 Ozone depletion and greenhouse gas reductions. Installations of HVAC, refrigeration and fire suppression equipment shall comply with Sections 5.508.1.1 and 5.508.1.2.

5.508.1.1 Chlorofluorocarbons (CFCs). Install HVAC, refrigeration and fire suppression equipment that do not contain CFCs.

5.508.1.2 Halons. Install HVAC, refrigeration and fire suppression equipment that do not contain Halons.

5.508.2 Supermarket refrigerant leak reduction. New commercial refrigeration systems shall comply with the provisions of this section when installed in retail food stores 8,000 square feet or more conditioned area, and that utilize either refrigerated display cases, or walk-in coolers or freezers connected to remote compressor units or condensing units. The leak reduction measures apply to refrigeration systems containing high-global-warming potential (high-GWP) refrigerants with a GWP of 150 or greater. New refrigeration systems include both new facilities and the replacement of existing refrigeration systems in existing facilities.

Exception: Refrigeration systems containing low-global warming potential (low-GWP) refrigerant with a GWP value less than 150 are not subject to this section. Low-GWP refrigerants are nonozone-depleting refrigerants that include ammonia, carbon dioxide (CO_2), and potentially other refrigerants.

5.508.2.1 Refrigerant piping. Piping compliant with the California Mechanical Code shall be installed to be accessible for leak protection and repairs. Piping runs using threaded pipe, copper tubing with an outside diameter (OD) less than 1/4 inch, flared tubing connections and short radius elbows shall not be used in refrigerant systems except as noted below.

5.508.2.1.1 Threaded pipe. Threaded connections are permitted at the compressor rack.

5.508.2.1.2 Copper pipe. Copper tubing with an OD less than 1/4 inch may be used in systems with a refrigerant charge of 5 pounds or less.

5.508.2.1.2.1 Anchorage. One-fouth-inch OD tubing shall be securely clamped to a rigid base to keep vibration levels below 8 mils.

5.508.2.1.3 Flared tubing connections. Double-flared tubing connections may be used for pressure controls, valve pilot lines and oil.

Exception: Single-flared tubing connections may be used with a multiring seal coated with industrial sealant suitable for use with refrigerants and tightened in accordance with manufacturer's recommendations.

5.508.2.1.4 Elbows. Short radius elbows are only permitted where space limitations prohibit use of long radius elbows.

5.508.2.2 Valves. Valves Valves and fittings shall comply with the *California Mechanical Code* and as follows.

5.508.2.2.1 Pressure relief valves. For vessels containing high-GWP refrigerant, a rupture disc shall be installed between the outlet of the vessel and the inlet of the pressure relief valve.

5.508.2.2.1.1 Pressure detection. A pressure gauge, pressure transducer or other device shall be installed in the space between the rupture disc and the relief valve inlet to indicate a disc rupture or discharge of the relief valve.

5.508.2.2.2 Access valves. Only Schrader access valves with a brass or steel body are permitted for use.

5.508.2.2.2.1 Valve caps. For systems with a refrigerant charge of 5 pounds or more, valve caps shall be brass or steel and not plastic.

5.508.2.2.2.2 Seal caps. If designed for it, the cap shall have a neoprene O-ring in place.

5.508.2.2.2.2.1 Chain tethers. Chain tethers to fit ovr the stem are required for valves designed to have seal caps.

Exception: Valves with seal caps that are not removed from the valve during stem operation.

5.508.2.3 Refrigerated service cases. Refrigerated service cases holding food products containing vinegar and salt shall have evaporator coils of corrosion-resistant material, such as stainless steel; or be coated to prevent corrosion from these substances.

5.508.2.3.1 Coil coating. Consideration shall be given to the heat transfer efficiency of coil coating to maximize energy efficiency.

5.508.2.4 Refrigerant receivers. Refrigerant receivers with capacities greater than 200 pounds shall be fitted with a device tha indicates the level of refrigerant in the receiver.

5.508.2.5 Pressure testing. The system shall be pressure tested during installation prior to evacuation and charging.

5.508.2.5.1 Minimum pressure. The system shall be charged with regulated dry nitrogen and appropriate tracer gas to bring system pressure up to 300 psig minimum.

5.508.2.5.2 Leaks. Check the system for leaks, repair any leaks, and retest for pressure using the same gauge.

5.508.2.5.3 Allowable pressure change. The system shall stand, unaltered, for 24 hours with no more than a +/- one pound pressure change from 300 psig, measured with the same gauge.

5.508.2.6 Evacuation. The system shall be evacuated after pressure testing and prior to charging.

5.508.2.6.1 First vacuum. Pull a system vacuum down to at least 1000 microns (+/- 50 microns), and hold for 30 minutes.

5.508.2.6.2 Second vacuum. Pull a second system vacuum to a minimum of 500 microns and hold for 30 minutes.

5.508.2.6.3 Third vacuum. Pull a third vacuum down to a minimum of 300 microns, and hold for 24 hours with a maximum drift of 100 microns over a 24-hour period.

CHAPTER 7
INSTALLER & SPECIAL INSPECTOR QUALIFICATIONS

702 QUALIFICATIONS

702.1 INSTALLER TRAINING. HVAC system installers shall be trained and certified in the proper installation of HVAC systems including ducts and equipment by a nationally or regionally recognized training or certification program. Uncertified persons may perform HVAC installations when under the direct supervision and responsibility of a person trained and certified to install HVAC systems or contractor licensed to install HVAC systems. Examples of acceptable HVAC training and certification programs include but are not limited to the following:

1. State certified apprenticeship programs.
2. Public utility training programs.
3. Training programs sponsored by trade, labor or statewide energy consulting or verification organizations.
4. Programs sponsored by manufacturing organizations.
5. Other programs acceptable to the enforcing agency.

702.2 SPECIAL INSPECTION [HCD]. When required by the enforcing agency, the owner or the responsible entity acting as the owner's agent shall employ one or more special inspectors to provide inspection or other duties necessary to substantiate compliance with this code. Special inspectors shall demonstrate competence to the satisfaction of the enforcing agency for the particular type of inspection or task to be performed. In addition to other certifications or qualifications acceptable to the enforcing agency, the following certifications or education may be considered by the enforcing agency when evaluating the qualifications of a special inspector:

1. Certification by a national or regional green building program or standard publisher.
2. Certification by a statewide energy consulting or verification organization, such as HERS raters, building performance contractors, and home energy auditors.
3. Successful completion of a third party apprentice training program in the appropriate trade.
4. Other programs acceptable to the enforcing agency.

Notes:

1. Special inspectors shall be independent entities with no financial interest in the materials or the project they are inspecting for compliance with this code.
2. HERS raters are special inspectors certified by the California Energy Commission (CEC) to rate homes in California according to the Home Energy Rating System (HERS).

[BSC-CG] When required by the enforcing agency, the owner or the responsible entity acting as the owner's agent shall employ one or more special inspectors to provide inspection or other duties necessary to substantiate compliance with this code. Special inspectors shall demonstrate competence to the satisfaction of the enforcing agency for the particular type of inspection or task to be performed. In addition, the special inspector shall have a certification from a recognized state, national or international association, as determined by the local agency. The area of certification shall be closely related to the primary job function, as determined by the local agency.

Note: Special inspectors shall be independent entities with no financial interest in the materials or the project they are inspecting for compliance with this code.

703 VERIFICATIONS

703.1 DOCUMENTATION. Documentation used to show compliance with this code shall include but is not limited to, construction documents, plans, specifications, builder or installer certification, inspection reports, or other methods acceptable to the enforcing agency which demonstrate substantial conformance. When specific documentation or special inspection is necessary to verify compliance, that method of compliance will be specified in the appropriate section or identified applicable checklist.

DISCLAIMER: *THIS DOCUMENT IS PROVIDED AND INTENDED TO BE USED AS A MEANS TO INDICATE AREAS OF COMPLIANCE WITH THE CALIFORNIA GREEN BUILDING STANDARDS (CALGREEN) CODE. DUE TO THE VARIABLES BETWEEN BUILDING DEPARTMENT JURISDICTIONS, THIS CHECKLIST IS TO BE USED ON AN INDIVIDUAL PROJECT BASIS AND MAY BE MODIFIED BY THE END USER TO MEET THOSE INDIVIDUAL NEEDS. THE END USER ASSUMES ALL RESPONSIBILITY ASSOCIATED WITH THE USE OF THIS DOCUMENT, INCLUDING VERIFICATION WITH THE FULL CODE.*

AGENCY

REVIEWED FOR CODE COMPLIANCE BY: WILLDAN ENGINEERING

Approval of these plans & specifications shall not be construed to be a permit for, or an approval of any violation of any Federal, State, County or City laws or ordinances. One set of approved plans must be kept on the job until completion.

9:23:33 AM Jul 21, 2025

FLEWELLING & MOODY
architecture planning interiors

HEADQUARTERS OFFICE:
99 S. Lake Avenue, Suite 300
Pasadena, CA 91101
Phone: 323.543.8300
E-Mail: fm-pasadena@flewelling-moody.com

ANTELOPE VALLEY OFFICE:
1035 West Lancaster Bouldvard
Lancaster, California 93534
Phone: 661.949.0771
E-Mail: fm-lancaster@flewelling-moody.com

An Employee Owned Corporation

ARCHITECT

LICENSED ARCHITECT — MATT T. GABBARD — C-14211 — 06/30/2026 — STATE OF CALIFORNIA

CONSULTANT

Drawn by: Author
Check by: Checker

Revisions

No.	Date	Description

All dimensions must be checked at the job by the contractor who accepts full responsibility for their accuracy under the contract. These plans & the specifications in connection therewith have been prepared for a specific site. Any and all responsibility for their use in whole or in part on any other site is hereby disclaimed by Flewelling & Moody.

CITY OF RIDGECREST

SGT. JOHN PINNEY MEMORIAL POOL REPLACEMENT PROJECT

205 S WARNER ST, RIDGECREST, CA 93555

Drawing Title

GREEN CODE

Job No. 3055-0100

Date 07/14/2025

Sheet No. **T0.05**

STATE OF CALIFORNIA
Nonresidential Building Commissioning
CALIFORNIA ENERGY COMMISSION

CERTIFICATE OF COMPLIANCE NRCC-CXR-E

This document is used to demonstrate compliance with mandatory commissioning requirements in 120.8 for nonresidential buildings and hotel/motel or mixed-use buildings with nonresidential spaces. This document does not demonstrate compliance with commissioning requirements within Title 24, Part 11, which need to be documented separately if they apply.

Project Name: Sgt. John Pinney Memorial Pool **Report Page:** (Page 1 of 8)
Project Address: 205 S. Warner St, Ridgecrest, CA 93555 **Date Prepared:** 2025-05-07T18:17:50-04:00

A. GENERAL INFORMATION

01	Project Location (city)	Ridgecrest	04	Building Size (ft²)	7568
02	Occupancy Type	Nonresidential	05		< 10,000 ft²
03	Project Type	Newly constructed	06		All other HVAC system types (indicates "complex")
			07	Climate Zone	14

B. PROJECT SCOPE

Based on project information provided in Table A, Table B indicates which commissioning related requirements apply per 120.8. Table B is not editable by the user.

Commissioning Requirements per 120.8

01	Table F: Design Review Kickoff	120.8(d)1 and 120.8(d)2	The design review kickoff meeting establishes who will play the role of the design reviewer, the project schedule and identify owner's requirements. This meeting should be conducted during schematic design.
02	Table G: Owner's Project Requirements (OPR)	120.8(b)	This requirement does not apply.
03	Table H: Basis of Design (BOD)	120.8(c)	This requirement does not apply.
04	Table I: Design Review	120.8(d) and 120.8(e)	The design reviewer(s) reviews the construction documents for clarity, completeness, and adherence to the owner's goals. Commissioning measures must be included in the construction documents to facilitate the design review and commissioning process. For projects with >= 10,000 ft² of nonresidential conditioned floor area, the design review is for adherence with the Owner's Project Requirements (OPR) and Basis of Design (BOD). This should be conducted during design.
05	Table J: Commissioning Plan	120.8(f)	This requirement does not apply.
06	Table K: Functional Performance Testing	120.8(g)	This requirement does not apply.
07	Table L: Documentation and Training	120.8(h)	This requirement does not apply.
08	Table M: Commissioning Report	120.8(i)	This requirement does not apply.

STATE OF CALIFORNIA
Nonresidential Building Commissioning
CALIFORNIA ENERGY COMMISSION

CERTIFICATE OF COMPLIANCE NRCC-CXR-E
Project Name: Sgt. John Pinney Memorial Pool **Report Page:** (Page 2 of 8)
Date Prepared: 2025-05-07T18:17:50-04:00

C. COMPLIANCE RESULTS

Table C will indicate if the project data input into the compliance document is compliant with commissioning requirements per 120.8. This table is not editable by the user. If any cell on this table says "DOES NOT COMPLY" or "COMPLIES with Exceptional Conditions" refer to Table D. for guidance.

01	02	03	04	05	06	07	08	09
Design Kickoff Review	Owner's Project Requirements	Basis of Design	Design Review	Commissioning Plan	Functional Performance Testing	Documentation and Training	Commissioning Report	
Table F	Table G	Table H	Table I	Table J	Table K	Table L	Table M	
Yes			Yes					COMPLIES
10				Scott F. Gaudineer, Sunil Patel, Manan Christian, Greg Ferrell				COMPLIES

D. EXCEPTIONAL CONDITIONS

This table is auto-filled with uneditable comments because of selections made or data entered in tables throughout the form.

E. ADDITIONAL REMARKS

This table includes remarks made by the permit applicant to the Authority Having Jurisdiction.

Generated Date/Time: Documentation Software: Energy Code Ace
CA Building Energy Efficiency Standards - 2022 Nonresidential Compliance Report Version: 2022.0.000 Schema Version: rev 20220101 Compliance ID: 258400-0525-0004 Report Generated: 2025-05-07 15:17:53

STATE OF CALIFORNIA
Nonresidential Building Commissioning
CALIFORNIA ENERGY COMMISSION

CERTIFICATE OF COMPLIANCE NRCC-CXR-E
Project Name: Sgt. John Pinney Memorial Pool **Report Page:** (Page 3 of 8)
Date Prepared: 2025-05-07T18:17:50-04:00

F. DESIGN REVIEW KICKOFF MEETING

This table indicates that the design reviewer meets the qualification requirements per Title 24, Part 1 Section 10-103(a)1 and demonstrates compliance with design review kickoff requirements per 120.8(d)2. This meeting should occur during the Schematic Design phase of the project.

Design Review Kickoff Meeting Details

01	Date of Design Review Kickoff Meeting		2025-04-10	
02	Meeting Attendees: (one person may play multiple roles)			
☒	Owner/Facility Manager:	Travis Reed. Ronald Strand	☒ Design Reviewer(s)	Diego Zuniga-Sanders, Saeid Hashemi, Manan Christian, Gary Ikari, Greg Ferrell
☒	Project Manager:	Diego Zuniga-Sanders	☒ Design Architect/ Engineer(s):	Diego Zuniga-Sanders, Saeid Hashemi, Manan Christian, Gary Ikari, Greg Ferrell
☐	Contractor:		☐ Certified Acceptance Test Tech(s):	
☐	Commissioning Provider:		☐ Energy/ T24 Part 6 Consultant:	

Design Reviewer Qualifications per Title 24 Part 1 Section 10-103(a)1

	The design reviewer(s) must be licensed professional engineers or licensed architects, or licensed contractors representing services performed by or under the direct supervision of a licensed engineer or architect, as specified in the provisions of Division 3 of the Business and Professions Code.	Do the Design Reviewer(s) meet these qualifications?	
03	In addition, for buildings with >= 50,000 ft², or complex mechanical systems[1], the design reviewer(s) shall be a third party design engineer, architect, or contractor.	Yes	No
		●	○
04	The design reviewer(s) for this project will be:	Scott F. Gaudineer, Sunil Patel, Manan Christian, Greg Ferrell	

Preliminary Construction Schedule

		Start Date	Completion Date
05	Schematic Design	2023-05-02	2023-07-02
06	Design Development	2023-07-03	2024-01-26
07	Construction Documents	2024-01-27	2025-05-16
08	Construction	2025-06-13	2025-07-29
09	Building Turnover	2025-07-30	2025-08-31

Project Goals Related to Energy Efficiency

10	Operational Costs	emphasis on efficient pool equipment that will keep annual operational costs as low a possible
11	Desired Building Lifespan	emphasis on utilizing durable building materials to increase building lifespan as much as possible.
12	Equipment Lifecycle	durable equipment with ability to replace with new assets towards end of life expectancy.

Generated Date/Time: Documentation Software: Energy Code Ace
CA Building Energy Efficiency Standards - 2022 Nonresidential Compliance Report Version: 2022.0.000 Schema Version: rev 20220101 Compliance ID: 258400-0525-0004 Report Generated: 2025-05-07 15:17:53

STATE OF CALIFORNIA
Nonresidential Building Commissioning
CALIFORNIA ENERGY COMMISSION

CERTIFICATE OF COMPLIANCE NRCC-CXR-E
Project Name: Sgt. John Pinney Memorial Pool **Report Page:** (Page 4 of 8)
Date Prepared: 2025-05-07T18:17:50-04:00

F. DESIGN REVIEW KICKOFF MEETING

13	Project Energy Efficiency Goals	energy efficiency goals per T24 requirements.
14	Envelope Goals	emphasis on controlling buildings internal temperature to minimize necessity of cooling and heating systems.
15	HVAC System Goals	Per owner's requirement the minimum T24 requirement has been achieved. the control of the HVAC system is based on stand alone and units can be ON/OFF by their thermostats.
16	Indoor Lighting System Goals	All indoor lighting to be LED light fixtures and all indoor lighting systems to meet minimum power allowance requirements from California Energy Code (indoor lighting T-24)
17	Outdoor Lighting System Goals	All outdoor lighting to be LED light fixtures and all outdoor lighting systems to meet minimum power allowance requirements from California Energy Code (outdoor lighting title-24)
18	Water Heating System Goals	The water heating goal is to be efficient per T24 requirement
19	Equipment and System Specifications	no specific types. emphasis on quality with ability to meet T24 requirements.
20	Operations and Maintenance	information regarding building systems training provided in project specifications.

G. OWNER'S PROJECT REQUIREMENTS (OPR)

This section does not apply to this project.

H. BASIS OF DESIGN (BOD)

This section does not apply to this project.

I. CONSTRUCTION DOCUMENT DESIGN REVIEW CHECKLIST

This table is only completed if a design review document is not attached to permit application to demonstrate compliance with 120.8(b) and 120.8(e). For buildings with >= 10,000 ft² conditioned floor area, the design review will ensure the construction documents meet the Owner's Project Requirements (Table G.) and the Basis of Design Documents (Table H.). For buildings with < 10,000 ft² conditioned floor area, the design review will ensure the construction documents meet the goals documented in Table F. during the Design Review Kickoff.

		YES	NO
01	Attaching Completed Design Review Documentation?	○	●

Generated Date/Time: Documentation Software: Energy Code Ace
CA Building Energy Efficiency Standards - 2022 Nonresidential Compliance Report Version: 2022.0.000 Schema Version: rev 20220101 Compliance ID: 258400-0525-0004 Report Generated: 2025-05-07 15:17:53

STATE OF CALIFORNIA
Nonresidential Building Commissioning
CALIFORNIA ENERGY COMMISSION

CERTIFICATE OF COMPLIANCE NRCC-CXR-E
Project Name: Sgt. John Pinney Memorial Pool **Report Page:** (Page 5 of 8)
Date Prepared: 2025-05-07T18:17:50-04:00

I. CONSTRUCTION DOCUMENT DESIGN REVIEW CHECKLIST

Design Review Checklist

02	Envelope Design	roofs with high solar reflectance chosen to alleviate stress on building cooling systems. Windows and glazing wall systems located adjacent to large roof overhangs to minimize sun exposure. CMU block chosen as main envelope building material to increase thermal mass and regulate internal temperatures. Concrete flooring utilized to increase thermal mass..
03	HVAC System Design	The selection of Community room units was challenging due to the total load and we ended up selection (2) VRF FCUs.
04	HVAC Controls Design	The control of the HVAC equipment is based on stand-alone and simplified for use as there is no central or BMS control. The thermostat locations are based on Owner's requirement.
05	Indoor Lighting System Design	Owner's requirements are to improve LED light fixtures for all indoor lighting and all indoor lighting systems to meet minimum power allowance requirements from California Energy Code (Indoor Lighting Title-24
06	Indoor Lighting Controls Design	Owner requirements are to achieve control requirements as noted in California Energy Code Indoor Lighting Title-24, thus indoor lighting control design provided on the plans comply with indoor lighting title-24 control requirements.
07	Outdoor Lighting System and Controls Design	Owner's requirements for outdoor lighting(except sports lighting) to be LED light fixtures , provide 3000K CCT for all outdoor light fixtures and all outdoor lighting systems to meet minimum power allowance requirements from California Energy Code (Outdoor lighting Title-24)
08	Water Heating System Design	The water heater is selected based on instantaneous demand requirement.
09	Other Systems and Features	efficient pool mechanical equipment chosen. i.e. circulation pumps, booster pumps as to keep facility annual operational costs as low as possible.

J. COMMISSIONING PLAN

This section does not apply to this project.

K. FUNCTIONAL PERFORMANCE TESTING

This section does not apply to this project.

L. DOCUMENTATION AND TRAINING

This section does not apply to this project.

Generated Date/Time: Documentation Software: Energy Code Ace
CA Building Energy Efficiency Standards - 2022 Nonresidential Compliance Report Version: 2022.0.000 Schema Version: rev 20220101 Compliance ID: 258400-0525-0004 Report Generated: 2025-05-07 15:17:53

STATE OF CALIFORNIA
Nonresidential Building Commissioning
CALIFORNIA ENERGY COMMISSION

CERTIFICATE OF COMPLIANCE NRCC-CXR-E
Project Name: Sgt. John Pinney Memorial Pool **Report Page:** (Page 6 of 8)
Date Prepared: 2025-05-07T18:17:50-04:00

M. COMMISSIONING REPORT

This section does not apply to this project.

N. DECLARATION OF REQUIRED CERTIFICATES OF INSTALLATION

There are no forms required for this project.

O. DECLARATION OF REQUIRED CERTIFICATES OF ACCEPTANCE

There are no forms required for this project.

Generated Date/Time: Documentation Software: Energy Code Ace
CA Building Energy Efficiency Standards - 2022 Nonresidential Compliance Report Version: 2022.0.000 Schema Version: rev 20220101 Compliance ID: 258400-0525-0004 Report Generated: 2025-05-07 15:17:53

STATE OF CALIFORNIA
Nonresidential Building Commissioning
CALIFORNIA ENERGY COMMISSION

CERTIFICATE OF COMPLIANCE NRCC-CXR-E
Project Name: Sgt. John Pinney Memorial Pool **Report Page:** (Page 7 of 8)
Date Prepared: 2025-05-07T18:17:50-04:00

DOCUMENTATION AUTHOR'S DECLARATION STATEMENT

I certify that this Certificate of Compliance documentation is accurate and complete.

Documentation Author Name: Scott F. Gaudineer	Documentation Author Signature:
Company: Flewelling & Moody	Signature Date: 05/07/25
Address: 99 S. Lake Avenue, Suite 300	CEA/ HERS Certification Identification (if applicable):
City/State/Zip: Pasadena / California / 91101	Phone: (323) 543-8300

RESPONSIBLE PERSON'S DECLARATION STATEMENT

I certify the following under penalty of perjury, under the laws of the State of California:

1. The information provided on this Certificate of Compliance is true and correct.
2. I am eligible under Division 3 of the Business and Professions Code to accept responsibility for the building design or system design identified on this Certificate of Compliance (responsible designer)
3. The energy features and performance specifications, materials, components, and manufactured devices for the building design or system design identified on this Certificate of Compliance conform to the requirements of Title 24, Part 1 and Part 6 of the California Code of Regulations.
4. The building design features or system design features identified on this Certificate of Compliance are consistent with the information provided on other applicable compliance documents, worksheets, calculations, plans and specifications submitted to the enforcement agency for approval with this building permit application.
5. I will ensure that a completed signed copy of this Certificate of Compliance shall be made available with the building permit(s) issued for the building, and made available to the enforcement agency for all applicable inspections. I understand that a completed signed copy of this Certificate of Compliance is required to be included with the documentation the builder provides to the building owner at occupancy.

Responsible Designer Name: Manan Christian	Responsible Designer Signature:
Company: Budlong	Date Signed: 2025-05-08
Address: 1000 Paseo Camarillo Drive	License: E22864
City/State/Zip: Camarillo, CA, 93010	Phone: 909-272-3284

Generated Date/Time: Documentation Software: Energy Code Ace
CA Building Energy Efficiency Standards - 2022 Nonresidential Compliance Report Version: 2022.0.000 Schema Version: rev 20220101 Compliance ID: 258400-0525-0004 Report Generated: 2025-05-07 15:17:53

STATE OF CALIFORNIA
Nonresidential Building Commissioning
CALIFORNIA ENERGY COMMISSION

CERTIFICATE OF COMPLIANCE NRCC-CXR-E
Project Name: Sgt. John Pinney Memorial Pool **Report Page:** (Page 8 of 8)
Project Address: **Date Prepared:** 2025-05-07T18:17:50-04:00

DOCUMENTATION AUTHOR'S DECLARATION STATEMENT

I certify that this Certificate of Compliance documentation is accurate and complete.

Documentation Author Name: Scott F. Gaudineer	Documentation Author Signature:
Company: Flewelling & Moody	Signature Date: 05/07/25
Address: 99 S. Lake Avenue, Suite 300	CEA/ HERS Certification Identification (if applicable):
City/State/Zip: Pasadena / California / 91101	Phone: (323) 543-8300

RESPONSIBLE PERSON'S DECLARATION STATEMENT

I certify the following under penalty of perjury, under the laws of the State of California:

1. The information provided on this Certificate of Compliance is true and correct.
2. I am eligible under Division 3 of the Business and Professions Code to accept responsibility for the building design or system design identified on this Certificate of Compliance (responsible designer)
3. The energy features and performance specifications, materials, components, and manufactured devices for the building design or system design identified on this Certificate of Compliance conform to the requirements of Title 24, Part 1 and Part 6 of the California Code of Regulations.
4. The building design features or system design features identified on this Certificate of Compliance are consistent with the information provided on other applicable compliance documents, worksheets, calculations, plans and specifications submitted to the enforcement agency for approval with this building permit application.
5. I will ensure that a completed signed copy of this Certificate of Compliance shall be made available with the building permit(s) issued for the building, and made available to the enforcement agency for all applicable inspections. I understand that a completed signed copy of this Certificate of Compliance is required to be included with the documentation the builder provides to the building owner at occupancy.

Responsible Designer Name: Sunil Patel	Responsible Designer Signature:
Company: Budlong & Associates	Date Signed: 05/08/2025
Address: 700 N. Central Ave. #520	License: M029448
City/State/Zip: Glendale, CA 91203	Phone: 909-215-3969

Generated Date/Time: Documentation Software: Energy Code Ace
CA Building Energy Efficiency Standards - 2022 Nonresidential Compliance Report Version: 2022.0.000 Schema Version: rev 20220101 Compliance ID: 258400-0525-0004 Report Generated: 2025-05-07 15:17:53

AGENCY

REVIEWED FOR CODE COMPLIANCE BY: WILLDAN ENGINEERING

Approval of these plans & specifications shall not be construed to be a permit for, or an approval of any violation of any Federal, State, County or City laws or ordinances. One set of approved plans must be kept on the job until completion.

9:23:34 AM Jul 21, 2025

FLEWELLING & MOODY
architecture planning interiors

HEADQUARTERS OFFICE:
99 S. Lake Avenue, Suite 300
Pasadena, CA 91101
Phone: 323.543.8300
E-Mail: fm-pasadena@flewelling-moody.com

ANTELOPE VALLEY OFFICE:
1035 West Lancaster Boulevard
Lancaster, California 93534
Phone: 661.949.0771
E-Mail: fm-lancaster@flewelling-moody.com

An Employee Owned Corporation

ARCHITECT

LICENSED ARCHITECT SCOTT T. GAMBLE C-14211 06/30/2025 STATE OF CALIFORNIA

CONSULTANT

Drawn by: Author
Check by: Checker

Revisions

No.	Date	Description

All dimensions must be checked at the job by the contractor who accepts full responsibility for their accuracy under the contract. These plans & the specifications in connection therewith have been prepared for a specific site. Any and all responsibility for their use in whole or in part on any other site is hereby disclaimed by Flewelling & Moody.

CITY OF RIDGECREST

SGT. JOHN PINNEY MEMORIAL POOL REPLACEMENT PROJECT

205 S WARNER ST, RIDGECREST, CA 93555

Drawing Title

NONRESIDENTIAL BUILDING COMMISSIONING FORMS

Job No. 3055-0100
Date 07/14/2025
Sheet No. **T0.06**

CIVIL IMPROVEMENTS FOR THE SGT. JOHN PINNEY MEMORIAL POOL REPLACEMENT PROJECT IN THE CITY OF RIDGECREST, CA

SURVEY NOTES

BENCHMARK

CHISELED "X" ON TOP OF CURB ON WEST SIDE OF SOUTH WARNER STREET.

POINT NO: 2
N: 2412514.71'
E: 6658412.58'
EL: 2304.04'

BASIS OF BEARINGS

THE BEARING OF NORTH 89° 53'00" EAST FOR THE NORTH LINE OF THE NORTHEAST QUARTER OF SECTION 4, TOWNSHIP 27 SOUTH, RANGE 40 EAST, MDM, AS SHOWN ON RECORD OF SURVEY IN BOOK 15 OF RECORD OF SURVEYS, AT PAGE 15, AT THE OFFICE OF THE KERN COUNTY RECORDER WAS USED AS THE BASIS OF BEARINGS AS SHOWN HEREON.

BASIS OF ELEVATIONS

THE NORTH AMERICAN VERTICAL DATUM OF 1988 (NAVD 88) WAS USED AS THE BASIS OF ELEVATION AS SHOWN HEREON.

POINT OF ORIGIN:

DESIGNATION CCCC_SCGN_CS2000 CORS ARP
CORS ID CCCC
PID DH8043
EPOCH 2010.00

POINT NO: 1
N: 2392233.14'
E: 6659474.73'
EL: 2772.79'

LEGAL DESCRIPTION

THE LAND REFERRED TO HEREIN BELOW IS SITUATED IN THE CITY OF RIDGECREST, COUNTY OF KERN, STATE OF CALIFORNIA AND IS DESCRIBED AS FOLLOWS:

PARCEL 1: APN: 478-010-09
ALL THAT PORTION OF THE NORTHEAST QUARTER OF SECTION 4, TOWNSHIP 27 SOUTH, RANGE 40 EAST, MOUNT DIABLO BASE AND MERIDIAN, IN THE CITY OF RIDGECREST, COUNTY OF KERN, STATE OF CALIFORNIA, BEING A PARCEL OF LAND DESCRIBED AS: COMMENCING AT THE NORTHWEST CORNER OF SAID NORTHEAST QUARTER; THENCE NORTH 89° 53' 00" EAST ALONG THE NORTH LINE OF SAID NORTHEAST QUARTER, A DISTANCE OF 1327.05 FEET; THENCE SOUTH 00° 52' 31" WEST, A DISTANCE OF 395.03 FEET; THENCE SOUTH 89° 53' 00" WEST A DISTANCE OF 177.26 FEET TO A POINT ON THE SOUTH BOUNDARY LINE OF THE LAND OWNED BY THE CITY OF RIDGECREST AS SHOWN IN BOOK 5141, PAGE 724 OF OFFICIAL RECORDS, AND THE TRUE POINT OF BEGINNING; THENCE ALONG THE FOLLOWING (8) COURSES:

(1) SOUTH 00° 55' 51" WEST A DISTANCE OF 20.00 FEET;
(2) SOUTH 89° 53' 00" WEST A DISTANCE OF 150.00 FEET;
(3) NORTH 00° 55' 51" EAST A DISTANCE OF 195.00 FEET;
(4) NORTH 89° 53' 00" WEST A DISTANCE OF 500.00 FEET;
(5) SOUTH 00° 55' 51" WEST A DISTANCE OF 600.00 FEET;
(6) SOUTH 89° 52' 49" EAST A DISTANCE OF 797.26 FEET TO WEST RIGHT OF WAY LINE OF WARNER STREET;
(7) NORTH 00° 52' 31" EAST ALONG SAID RIGHT OF WAY LINE 525 FEET TO A POINT ON SOUTH BOUNDARY LINE OF THE LAND OWNED BY THE CITY;
(8) SOUTH 89° 53' 00" WEST 147.26 FEET TO POINT OF BEGINNING.

EXCEPTING AND RESERVING ALL OIL, GAS, AND OTHER HYDROCARBON SUBSTANCE, MINERALS AND WATER WITHIN OR UNDERLYING SAID LAND, PROVIDED HOWEVER GRANTOR HEREIN, THEIR SUCCESSORS AND ASSIGNS, SHALL NOT CONDUCT DRILLING OR OTHER OPERATIONS UPON THE SURFACE OF SAID LAND, BUT NOTHING HEREIN CONTAINED SHALL BE DEEMED TO PREVENT SAID GRANTOR, THEIR SUCCESSORS AND ASSIGNS FROM EXTRACTING OR CAPTURING SAID OIL, GAS, PETROLEUM, OTHER HYDROCARBON SUBSTANCES, MINERALS AND WATER FROM SAID LAND BY DRILLING ON ADJACENT OR NEIGHBORING LANDS AT A DEPTH OF 100 FEET OR MORE BELOW THE SURFACE OF SAID LAND, AS RESERVED BY KERR-MCGEE CHEMICAL CORPORATION IN DEED RECORDED FEBRUARY 11, 1987 IN BOOK 5969, PAGE 724 AS DOCUMENT NO. 016927 OF OFFICIAL RECORDS.

PARCEL 2: APN: 478-010-13
ALL THE PORTION OF THE NORTHEAST QUARTER OF SECTION 4, TOWNSHIP 27 SOUTH, RANGE 40 EAST, MOUNT DIABLO BASE AND MERIDIAN, IN THE CITY OF RIDGECREST, COUNTY OF KERN, STATE OF CALIFORNIA, DESCRIBED AS: COMMENCING AT THE NORTHWEST CORNER OF SAID NORTHEAST QUARTER; THENCE NORTH 89° 53' 00" EAST, ALONG THE NORTH LINE OF SAID NORTHEAST QUARTER, A DISTANCE OF 1327.05 FEET; THENCE SOUTH 00° 52' 31" WEST A DISTANCE OF 395.03 FEET; THENCE SOUTH 89° 53' 00" WEST A DISTANCE OF 177.26 FEET TO A POINT ON THE SOUTH BOUNDARY LINE OF THE LAND OWNED BY THE CITY OF RIDGECREST AS SHOWN IN BOOK 5141, PAGE 724 OF OFFICIAL RECORDS, AND THE TRUE POINT OF BEGINNING; THENCE ALONG THE FOLLOWING (4) COURSES:

(1) SOUTH 00° 55' 51" WEST A DISTANCE OF 20.00 FEET.
(2) SOUTH 89° 53' 00" WEST A DISTANCE OF 150.00 FEET.
(3) NORTH 00° 55' 51" EAST A DISTANCE OF 20.00 FEET.
(4) NORTH 89° 53' 00" EAST A DISTANCE OF 150.00 FEET TO THE POINT OF BEGINNING.

LEGEND

- PROPOSED PC CONCRETE - PEDESTRIAN
- PROPOSED PC CONCRETE - VEHICULAR
- PROPOSED ASPHALT CONCRETE - PARKING STALLS
- PROPOSED ASPHALT CONCRETE - DRIVE AISLE
- PROPOSED LANDSCAPING PER LANDSCAPE ARCHITECT'S PLAN
- PROPOSED SOD TURF PER LANDSCAPE ARCHITECT'S PLAN
- PROPOSED SAWCUT
- PROPOSED FENCE
- EXISTING FENCE
- RIGHT OF WAY/PROPERTY LINE
- GB — GRADE BREAK
- 2344 — EXISTING MINOR CONTOURS
- 2345 — EXISTING MAJOR CONTOURS
- 2344 — PROPOSED MINOR CONTOURS
- 2345 — PROPOSED MAJOR CONTOURS
- PROPOSED FLOWLINE
- SD — PROPOSED STORM DRAIN
- FW — PROPOSED FIRE WATER
- W — PROPOSED WATER LINE
- S — PROPOSED SEWER LINE
- EXISTING STREET CENTERLINE
- STORM DRAIN INLET
- OHW — EXISTING OVER HEAD WIRE
- E — EXISTING ELECTRICAL LINE
- G — EXISTING GAS LINE
- W — EXISTING WATER LINE
- SD — EXISTING STORM DRAIN LINE
- FW — EXISTING FIREWATER LINE
- S — EXISTING SEWER LINE
- COMM — EXISTING COMMUNICATION LINE
- 2410.00 FS — PROPOSED ELEVATION
- (2410.00) EG — EXISTING ELEVATION
- 1.5% — PROPOSED GRADE

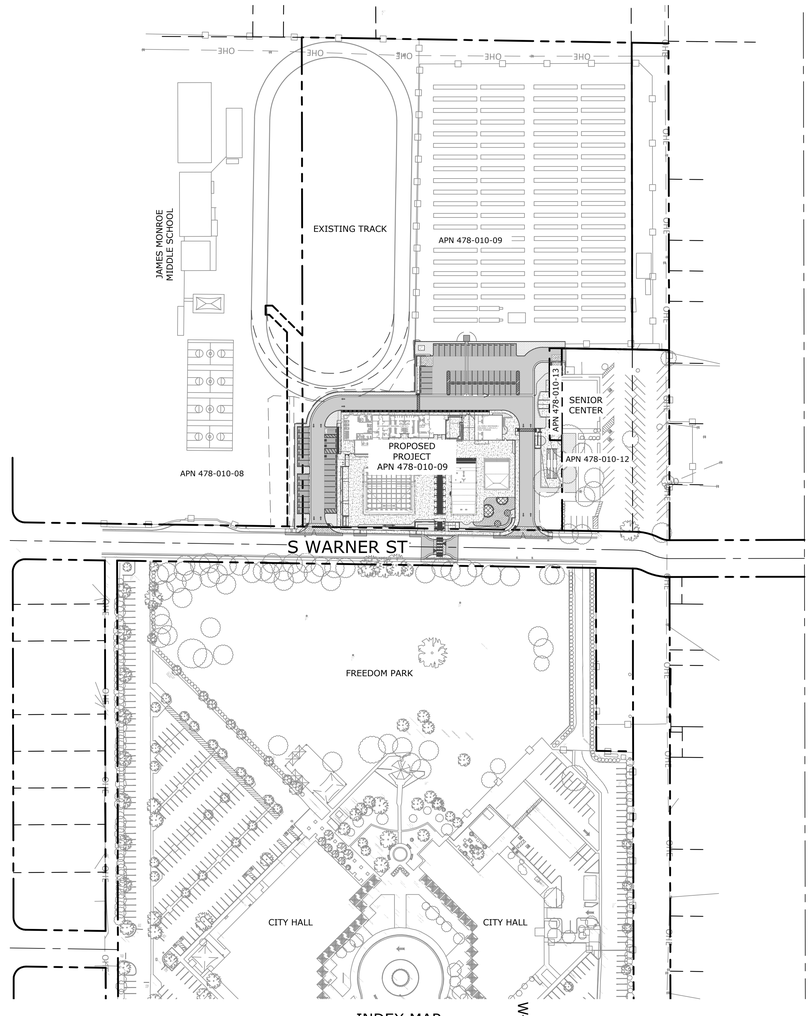

INDEX MAP
SCALE: 1"=100'

SHEET INDEX

C1.01	COVER SHEET
C1.02	GENERAL NOTES
C2.01	EROSION CONTROL PLAN
C2.02	EROSION CONTROL DETAILS
C3.01	GRADING AND PAVING PLAN
C3.02	GRADING AND PAVING PLAN
C3.03	GRADING AND PAVING PLAN
C3.04	ENLARGED DETAILS
C3.05	SITE SECTIONS
C3.06	GRADING DETAILS
C3.07	GRADING DETAILS
C4.01	WET UTILITY PLAN
C4.02	WET UTILITY DETAILS
C4.03	WET UTILITY DETAILS
C5.01	HORIZONTAL CONTROL PLAN

ADJACENT PROPERTY OWNER STATEMENT

I HAVE REVIEWED AND APPROVED THE GRADING WORK SHOWN ON THIS PLAN TO BE DONE ON MY PROPERTY.

SIGNATURE SSUSD 05/20/25 DATE

ENGINEER'S NOTICE TO CONTRACTOR

THE EXISTENCE AND LOCATION OF ANY UNDERGROUND UTILITY PIPES, CONDUITS OR STRUCTURES SHOWN ON THESE PLANS WAS OBTAINED BY A SEARCH OF THE AVAILABLE RECORDS. TO THE BEST OF OUR KNOWLEDGE, THERE ARE NO EXISTING UTILITIES EXCEPT AS SHOWN ON THESE PLANS. THE CONTRACTOR IS REQUIRED TO TAKE DUE PRECAUTIONARY MEASURES TO PROTECT THE UTILITY LINES SHOWN ON THESE DRAWINGS. THE CONTRACTOR FURTHER ASSUMES ALL LIABILITY AND RESPONSIBILITY FOR THE UTILITY PIPES, CONDUITS OR STRUCTURES SHOWN OR NOT SHOWN ON THESE DRAWINGS. THE CONTRACTOR SHALL POTHOLE ALL EXISTING UTILITIES TO VERIFY THE LOCATION AND ANY DISCREPANCY BETWEEN THE PLANS SHALL BE BROUGHT TO THE ATTENTION OF THE DESIGN ENGINEER.

CONTRACTOR AGREES THAT HE SHALL ASSUME SOLE AND COMPLETE RESPONSIBILITY FOR THE JOB SITE CONDITION DURING THE COURSE OF CONSTRUCTION OF THIS PROJECT, INCLUDING SAFETY OF ALL PERSONS AND PROPERTY AND THAT THIS REQUIREMENT SHALL APPLY CONTINUOUSLY AND NOT BE LIMITED TO NORMAL WORKING HOURS. THE CONTRACTOR ALSO AGREES TO DEFEND, INDEMNIFY AND HOLD THE OWNER AND THE ENGINEER HARMLESS FROM ANY AND ALL LIABILITY, REAL OR ALLEGED IN CONNECTION WITH THE PERFORMANCE OF WORK ON THIS PROJECT, EXCEPTING FOR LIABILITY ARISING FROM THE SOLE NEGLIGENCE OF THE OWNER OR THE ENGINEER.

JOSIAH D. JENISON R.C.E. 77454 DATE 05/02/2025

REVIEWED FOR CODE COMPLIANCE BY: WILLDAN ENGINEERING

Approval of these plans & specifications shall not be construed to be a permit for, or an approval of any violation of any Federal, State, County or City laws or ordinances. One set of approved plans must be kept on the job until completion.

12:11:58 PM Jul 20, 2025

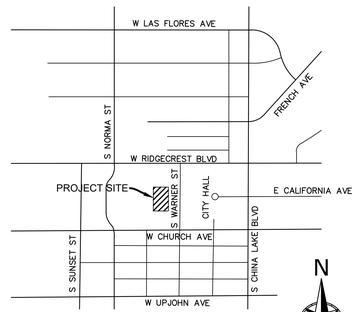

VICINITY MAP
N.T.S.

ABBREVIATIONS

ABBR	ABBREVIATION
A.C.	ASPHALT CONCRETE
A.C.P.	ASBESTOS CONCRETE PIPE
AP	ANGLE POINT
ARCH.	ARCHITECT
ASSOC.	ASSOCIATION
AVE	AVENUE
BC	BEGIN CURVE
BCR	BEGIN CURB RETURN
BDY.	BOUNDARY
BEG	BEGIN
BFP	BACKFLOW PREVENTER
BLDG	BUILDING
BOT	BOTTOM OF PIPE
BS	BOTTOM OF STEP
BVC	BEGIN VERTICAL CURVE
BW	BACK OF WALK OR BOTTOM OF WALL
CB	CATCH BASIN
CBC	CALIFORNIA BUILDING CODE
C-C	CENTER TO CENTER
CF	CURB FACE
CFS	CUBIC FEET PER SECOND
CL	CENTERLINE OR CLASS
CLF	CHAIN LINK FENCE
CLR	CLEAR
CMB	CRUSHED MISCELLANEOUS BASE
CMP	CORRUGATED METAL PIPE
CMU	CONCRETE MASONRY UNIT
CO	CLEANOUT
CONC	CONCRETE
CONT	CONTROL
CPS	CONNECTOR PIPE SCREEN
CT	COURT
DBL	DOUBLE
DES	DESIGN
DG	DECOMPOSED GRANITE
DI	DROP INLET
D.I.	DUCTILE IRON
DIA	DIAMETER
DR	DRIVE
DWG	DRAWING
EASE	EASEMENT
EBAA	EBAA IRON, INC.
EC	END CURVE
ECR	END CURB RETURN
EG	EXISTING GROUND
ELEC	ELECTRIC
ELEV	ELEVATION
E'LY	EASTERLY
ELLIP	ELLIPTICAL
EP	EDGE OF PAVEMENT
ESMT	EASEMENT
EVC	END VERTICAL CURVE
EQ	EQUIVALENT
FED.	FEDERAL
FF	FINISHED FLOOR
FG	FINISH GRADE
FL	FLOWLINE
FS	FINISHED SURFACE
FT/S	FEET PER SECOND
FUT	FUTURE
GB	GRADE BREAK
GF	GARAGE FLOOR
GM	GAS METER
G.P.	GRADING PERMIT
GV	GAS VALVE
HGL	HYDRAULIC GRADE LINE
HOA	HOME OWNERS ASSOCIATION
HORZ.	HORIZONTAL
HP	HIGH POINT
HPS	HIGH PRESSURE SODIUM
HW	HEADWALL
ICP	INTERLOCKING CONCRETE PAVERS
ICV	IRRIGATION CONTROL VALVE
INT.	INTERSECTION
INV	INVERT
IRR	IRRIGATION
LAT	LATERAL
LDM	LAND DEVELOPMENT MANUAL
LDSP	LANDSCAPE
LF	LINEAR FEET
LN	LANE
LP	LOW POINT
LT	LEFT
LVL	LEVEL
MAX	MAXIMUM
MH	MANHOLE
MIN	MINIMUM
MOC	MIDDLE OF CURVE
N'LY	NORTHERLY
NO.	NUMBER
N.T.S.	NOT TO SCALE
O.C.	ON CURB OR ON CURVE OR ON CENTER
OHW	OVERHEAD WIRE
PB	PULL BOX
P.C.C.	PORTLAND CEMENT CONCRETE OR POINT OF COMPOUND CURVE
PI	POINT OF INTERSECTION
P/L	PROPERTY LINE
PMB	PROCESSED MISC. BASE
POC	POINT OF CONNECTION
PRC	POINT OF REVERSE CURVE
PT	POINT
PTDF	PRESSURE TREATED DOUGLAS FIR
PUB	PUBLIC
PVC	POLYVINYL CHLORIDE
PVMT	PAVEMENT
PVT	PRIVATE
RCB	REINFORCED CONCRETE BOX
RCP	REINFORCED CONCRETE PIPE
RD	ROAD
RET	RETAINING
RWGV	RESILIENT WEDGE GATE VALVE
R.O.W.	RIGHT OF WAY
RPD	RESIDENTIAL PLANNED DEVELOPMENT
RT	RIGHT
RW	RECLAIMED WATER
R/W	RIGHT OF WAY
SCE	SOUTHERN CALIFORNIA EDISON
SCO	SEWER CLEAN OUT
SD	STORM DRAIN
SDMH	STORM DRAIN MANHOLE
SDR	STANDARD DIMENSION RATIO
S.E.	SAND EQUIVALENT
SF	SQUARE FOOT/FEET
SHT	SHEET
SHTS	SHEETS
S.L.	SEWER LATERAL
SLDS	STANDARD LAND DEVELOPMENT SPECIFICATIONS
S'LY	SOUTHERLY
SMH	SEWER MANHOLE
S.N.S.	STREET NAME SIGN
SPPWC	STANDARD PLANS FOR PUBLIC WORKS CONSTRUCTION
SS	SANITARY SEWER
SSPWC	STANDARD SPECIFICATIONS FOR PUBLIC WORKS CONSTRUCTION
ST	STREET
STD	STANDARD
SW	SIDEWALK
SWCT	SAWCUT
TC	TOP OF CURB
TEL	TELEPHONE
TG	TOP OF GRATE
TF	TOP OF FOOTING
TI	TRAFFIC INDEX
TMH	TELEPHONE MANHOLE
TOE	TOE OF SLOPE
TOP	TOP OF SLOPE OR PIPE
TPL	TRIPLE
TR	TRACT
TS	TOP OF STEP
TW	TOP OF WALL
TYP	TYPICAL
UG	UNDERGROUND
VAR	VARIES
V.C.	VERTICAL CURVE
VERT.	VERTICAL
VLT	VAULT
VLV	VALVE
W	WATER
W'LY	WESTERLY
WM	WATER METER
WSEL	WATER SURFACE ELEVATION
WV	WATER VALVE
W.W.M.	WELDED WIRE MESH
YR	YEAR

CBC TABLE 1705.6
REQUIRED SPECIAL INSPECTIONS AND TESTS OF SOILS

TYPE	CONTINUOUS SPECIAL INSPECTION	PERIODIC SPECIAL INSPECTION
1. VERIFY MATERIALS BELOW SHALLOW FOUNDATIONS ARE ADEQUATE TO ACHIEVE THE DESIGN BEARING CAPACITY.	-	X
2. VERIFY EXCAVATIONS ARE EXTENDED TO PROPER DEPTH AND HAVE REACHED PROPER MATERIAL.	-	X
3. PERFORM CLASSIFICATION AND TESTING OF COMPACTED FILL MATERIALS.	-	X
4. DURING FILL PLACEMENT, VERIFY USE OF PROPER MATERIALS AND PROCEDURES IN ACCORDANCE WITH THE PROVISIONS OF THE APPROVED GEOTECHNICAL REPORT. VERIFY DENSITIES AND LIFT THICKNESSES DURING PLACEMENT AND COMPACTION OF COMPACTED FILL.	X	-
5. PRIOR TO PLACEMENT OF COMPACTED FILL, INSPECT SUBGRADE AND VERIFY THAT SITE HAS BEEN PREPARED PROPERLY.	-	X

GEOTECHNICAL REPORT

ALL OF THE GRADING PROCEDURES, RECOMMENDATIONS AND SPECIFICATIONS THAT ARE INDICATED ON THE GEOTECHNICAL REPORT NO. 23-19224, DATED NOVEMBER 7, 2023, PREPARED BY SOILS ENGINEERING, INC. MUST BE ADHERED TO.

THIS PLAN HAS BEEN REVIEWED AND CONFORMS TO THE RECOMMENDATIONS PROVIDED IN THE SOILS REPORT DATED NOVEMBER 7, 2023.

REGISTERED PROFESSIONAL ENGINEER IAN MAN LAU GE2644 EXP. 12-31-2025 GEOTECHNICAL CALIFORNIA

SOILS ENGINEER SEAL & SIGNATURE April 3, 2025 DATE

Know what's below. Call before you dig.

AGENCY

FLEWELLING & MOODY
architecture planning interiors

HEADQUARTERS OFFICE:
99 S. Lake Ave., Suite 300
Pasadena, CA 91101
323.543.8300
E-Mail: fm-pasadena@flewelling-moody.com

ANTELOPE VALLEY OFFICE:
1035 West Lancaster Boulevard
Lancaster, California 93534
661.949.0771
E-Mail: fm-lancaster@flewelling-moody.com

An Employee Owned Corporation

ARCHITECT

CONSULTANT

REGISTERED PROFESSIONAL ENGINEER JOSIAH D. JENISON NO 77454 CIVIL STATE OF CALIFORNIA

ECG Encompass Consultant Group
25115 AVE STANFORD, SUITE A320, SANTA CLARITA, CA 91355
PHONE: 661.600.9367 WEBSITE: WWW.JDCGCIVIL.COM

Drawn by

Checked by

Revisions

No.	Date	Description

All dimensions must be checked at the job by the contractor who accepts full responsibility for their accuracy under the contract. These plans & the specifications in connection therewith have been prepared for a specific site. Any and all responsibility for their use in whole or in part on any other site is hereby disclaimed by Flewelling & Moody.

CITY OF RIDGECREST

SGT. JOHN PINNEY MEMORIAL POOL REPLACEMENT

205 S WARNER ST.
RIDGECREST, CA 93555

COVER SHEET

Job No. 3055-0100

Date 05/02/2025

C1.01

GENERAL NOTES

1. CONTRACTOR SHALL REVIEW GRADING AND DRAINAGE AND UTILITY PLANS; AND PROTECT ALL EXISTING FACILITIES TO REMAIN. ADJUST ALL UTILITY SURFACE FEATURES TO FINAL GRADES.
2. CONTRACTOR SHALL REMOVE ALL TREES AND EXISTING ROOTS SYSTEMS WITHIN THE PROJECT AREA TO THE SATISFACTION OF THE OWNER'S REPRESENTATIVE.
3. CONTRACTOR SHALL MAINTAIN UTILITY SERVICES TO EXISTING BUILDINGS AND HYDRANTS THROUGHOUT CONSTRUCTION AND COORDINATE ANY SHUT DOWNS WITH THE OWNER'S REPRESENTATIVE.
4. CONTRACTOR SHALL THOROUGHLY REVIEW CONSTRUCTION DOCUMENTS IN THEIR ENTIRETY FOR PROJECT DEMOLITION AND CONSTRUCTION.
5. CONTRACTOR IS RESPONSIBLE FOR DEMOLITION AND REMOVAL OF ALL EXISTING FACILITIES AND FEATURES WITHIN THE PROJECT LIMIT WHICH ARE REQUIRED FOR THE PROJECT CONSTRUCTION. CONTRACTOR SHALL PROTECT ALL EXISTING FACILITIES THAT ARE TO REMAIN IN PLACE AND PROMPTLY REPAIR ANY DAMAGES CAUSED BY DEMOLITION AND CONSTRUCTION AT ITS OWN EXPENSE. ALL EXISTING UTILITIES WITHIN THE BUILDING FOOTPRINT SHALL BE CAPPED AT THE NEAREST TEE, VALVE, OR MANHOLE. CONTRACTOR SHALL REMOVE ALL DEMOLITION/WASTE MATERIALS FROM THE PROJECT SITE AND LEGALLY DISPOSE OF THEM AT A DUMP SITE OFF-SITE.
6. REVIEW LANDSCAPE PLANS FOR IRRIGATION DESIGN TO REMOVE EXISTING IRRIGATION SYSTEM IN CONFLICT WITH CONSTRUCTION, AND CONSTRUCT NEW FACILITIES.
7. CONTRACTOR SHALL CONSTRUCT EROSION CONTROL DEVICES PER PROJECT EROSION CONTROL PLANS AND AS REQUIRED FOR SITE CONDITIONS. NO SILT AND DEBRIS SHALL BE ALLOWED TO DEPART FROM THE CONSTRUCTION LIMITS OR ENTER THE STORM DRAIN SYSTEM.
8. CONTRACTOR SHALL PREPARE AND PROVIDE ALL CONSTRUCTION STAKING FOR THE CONSTRUCTION OF THIS PROJECT.
9. CONTRACTOR SHALL USE PROVIDED COORDINATES TO INITIALLY LOCATE THE BUILDINGS AND CONSTRUCT THE BUILDINGS PER THE ARCHITECTURAL PLANS. THE AUTOCAD DRAWING FILES MAY BE PROVIDED TO THE CONTRACTOR FOR STAKING PURPOSES DURING CONSTRUCTION.
10. CONTRACTOR SHALL PROVIDE A SUITABLE STABILIZED CONSTRUCTION ENTRANCE/EXIT AT ALL ACCESS POINTS FROM THE JOB SITE TO PREVENT TRACKING OF MUD ONTO THE SITE AND PUBLIC ROADS. ADDITIONALLY PROVIDE SWEEPER SERVICE ON THE FREQUENCY NECESSARY TO MITIGATE UNDESIRABLE CONDITIONS, AS APPROVED BY THE OWNER'S REPRESENTATIVE.
11. CONTRACTOR SHALL SUBMIT A DRAWING OF THE PROPOSED STAGING AREA AND CONSTRUCTION FENCING TO THE OWNER'S REPRESENTATIVE FOR APPROVAL. CONSTRUCTION STAGING SHALL NOT BLOCK FIRE ENGINE ACCESS OR EXISTING FIRE HYDRANTS.
12. SANITARY FACILITIES SHALL BE MAINTAINED ON THE SITE.
13. IT SHALL BE THE RESPONSIBILITY OF THE CONTRACTOR TO VERIFY THE LOCATION OF AND PROTECT ALL EXISTING UTILITIES AND TO ENSURE SERVICE IS NOT DISRUPTED TO EXISTING FACILITIES.
14. CONTRACTOR SHALL OBTAIN OR ARRANGE WITH CITY TO OBTAIN HYDRANT METER AND PERMIT FROM INDIAN WELLS VALLEY WATER DISTRICT TO ACCESS WATER FOR CONSTRUCTION.
15. ALL THE PEDESTRIAN WALKING SURFACES THAT ARE PART OF AN ACCESSIBLE ROUTE WITH ENHANCED SURFACES MUST BE ACCESSIBLE TYPE FOR THE DISABLED PER CBC 11B-403.1 &2, 11B-302.1.
16. ONLY APPROVED DSA-AC DETECTABLE WARNING PRODUCTS (TRUNCATED DOMES) AND DIRECTIONAL SURFACES SHALL BE INSTALLED IN THE CALIFORNIA CODE OF REGULATIONS (CCR), TITLE 24, PART 1, CHAPTER 5, ARTICLES 2, 3, AND 4. REFER TO CCR TITLE 24, PART 12, CHAPTERS 11B, SECTION 12-11B.205, FOR BUILDING AND FACILITY ACCESS SPECIFICATIONS FOR PRODUCT APPROVAL FOR DETECTABLE WARNING PRODUCTS AND DIRECTIONAL SURFACES. [CBC 11B-705.3]

GENERAL DEMOLITION NOTES

1. DEMOLITION SHALL CONSIST OF FURNISHING ALL LABOR, MATERIALS AND EQUIPMENT NECESSARY TO REMOVE EXISTING STRUCTURES, UTILITIES, AND ALL OTHER MATERIAL FROM THE PROJECT SITE.
2. DISPOSAL OF MATERIALS SHALL BE DONE IN A SAFE AND LEGAL MANNER AND SHALL BE IN ACCORDANCE WITH ALL STATE AND LOCAL REGULATIONS.
3. THE CONTRACTOR SHALL CONTINUOUSLY CLEAN AND REMOVE DEMOLISHED MATERIALS FROM THE SITE EXCEPT WHERE SPECIFICALLY NOTED OTHERWISE. DO NOT ALLOW MATERIALS TO ACCUMULATE ON SITE.
4. EXISTING UNDERGROUND UTILITIES SHALL BE PROTECTED IN PLACE UNLESS OTHERWISE NOTED.
5. IT SHALL BE THE CONTRACTOR'S RESPONSIBILITY TO REPLACE IN-KIND ANY ITEMS DAMAGED DURING THE DEMOLITION PROCESS THAT ARE INTENDED TO REMAIN.
6. ALL EXISTING LANDSCAPE INSIDE THE LIMITS OF WORK SHALL BE REMOVED, UNLESS OTHERWISE NOTED ON THE PLANS.
7. ALL SURFACE FEATURES FOR EXISTING UNDERGROUND UTILITIES SHALL REMAIN AND BE ADJUSTED TO MATCH NEW FINISH GRADE - UNLESS OTHERWISE NOTED.
8. SAWCUT EXISTING PAVEMENT FULL DEPTH TO A CLEAN STRAIGHT EDGE.
9. ALL TREE ROOTS, ABANDONED IRRIGATION LINES, UTILITY SERVICES, SEPTIC TANKS (AS NOTED) AND SIMILAR MATERIALS SHALL BE REMOVED FROM THE SITE AND VOIDS CREATED THEREBY SHALL BE PROPERLY FILLED AND COMPACTED AS DIRECTED BY THE ENGINEER.
10. CONTRACTOR TO COORDINATE WITH CITY STAFF FOR LOCATION OF EXISTING COMMUNICATION AND ELECTRICAL STUBS.
11. EXCAVATIONS AND DEPRESSIONS RESULTING FROM FOUNDATION AND BELOW-GRADE STRUCTURE REMOVAL SHALL NOT BE FILLED IN PRIOR TO OBSERVATION BY THE GEOTECHNICAL REPRESENTATIVE.
12. CONTRACTOR SHALL PROVIDE LATERAL SUPPORT OF EXCAVATIONS, AS NEEDED, TO PREVENT LATERAL AND VERTICAL MOVEMENT OF ADJACENT EXISTING FACILITIES.

GRADING NOTES

1. ALL WORK SHALL BE DONE IN ACCORDANCE WITH THE LATEST ADOPTED EDITION OF THE CALIFORNIA BUILDING CODE. ALL CONSTRUCTION MATERIALS AND WORKMANSHIP SHALL CONFORM TO THE STANDARD SPECIFICATIONS FOR PUBLIC WORKS CONSTRUCTIONS (GREEN BOOK) LATEST EDITION AND AMENDMENTS WHENEVER SPECIAL REQUIREMENTS CONFLICT ON ANY SUBJECT MATTER. THE ENGINEER OF RECORD AND/OR HIS REPRESENTATIVE WILL DETERMINE WHICH SPECIAL REQUIREMENT AND/OR CODE WILL GOVERN.
2. THE CONTRACTOR SHALL BE RESPONSIBLE FOR THE CLEARING AND DISPOSAL OF THE PROPOSED WORK AREA.
3. DUST SHALL BE CONTROLLED BY WATERING OR OTHER APPROVED METHODS IN ACCORDANCE WITH CITY, COUNTY, AND STATE ORDINANCES AND STATUTES.
4. NO FILL SHALL BE PLACED ON THE EXISTING GROUND UNTIL THE GROUND HAS BEEN CLEARED OF WEEDS, DEBRIS, TOPSOIL, DELETERIOUS MATERIAL AND SCARFIED PER THE PROJECT SPECIFICATIONS.
5. CUT AND FILL SLOPES SHALL BE NO STEEPER THAN TWO HORIZONTAL TO ONE VERTICAL.
6. FILLS SHALL BE COMPACTED THROUGHOUT TO THE MAXIMUM DENSITY AS DETERMINED THE GEOTECHNICAL ENGINEER.
7. AREAS TO RECEIVE FILL SHALL BE PROPERLY PREPARED AND APPROVED BY THE GEOTECHNICAL ENGINEER AND/OR HIS REPRESENTATIVE PRIOR TO PLACING OF FILL.
8. FILL SLOPES SHALL BE KEYED AND BENCHED WITH APPROVED MATERIAL AND PER THE RECOMMENDATIONS OF THE PROJECT SOILS REPORT.
9. ALL EXISTING FILLS SHALL BE APPROVED BY THE GEOTECHNICAL ENGINEER AND OR HIS REPRESENTATIVE BEFORE ANY ADDITIONAL FILLS ARE ADDED.
10. ANY EXISTING IRRIGATION LINES AND CISTERNS SHALL BE REMOVED OR CRUSHED IN PLACE AND BACKFILLED AND APPROVED BY THE GRADING INSPECTOR AND GEOTECHNICAL ENGINEER, UNLESS OTHERWISE NOTED ON THE PLANS.
11. SLOPES EXCEEDING FIVE FEET IN HEIGHT MUST BE PLANTED AND AN APPROVED IRRIGATION SYSTEM SHALL BE INSTALLED.
12. ALL TRENCH BACKFILLS SHALL BE TESTED AND APPROVED BY THE PROJECT GEOTECHNICAL ENGINEER PER THE GRADING AND EXCAVATION CODE.
13. ALL CUT SLOPES SHALL BE INVESTIGATED BOTH DURING AND AFTER GRADING BY AN ENGINEERING GEOLOGIST TO DETERMINE IF ANY SLOPE STABILITY PROBLEM EXISTS SHOULD EXCAVATION DISCLOSE ANY GEOLOGICAL HAZARDS OR POTENTIAL GEOLOGICAL HAZARDS. THE ENGINEERING GEOLOGIST SHALL RECOMMEND NECESSARY TREATMENT TO THE CONSTRUCTION MANAGER FOR APPROVAL.

GRADING NOTES (CONTINUED)

14. THE FINAL COMPACTION REPORT AND APPROVAL FROM THE GEOTECHNICAL ENGINEER SHALL CONTAIN THE TYPE OF FIELD TESTING PERFORMED. THE METHOD OF OBTAINING THE IN-PLACE DENSITY, WHETHER SAND CONE, NUCLEAR GAGE, OR DRIVE RING SHALL BE NOTED FOR EACH TEST. SUFFICIENT MAXIMUM DENSITY DETERMINATIONS SHALL BE PERFORMED TO VERIFY THE ACCURACY OF THE MAXIMUM DENSITY CURVES USED BY THE FIELD TECHNICIAN.
15. ALL EXISTING DRAINAGE COURSES ON THE PROJECT SITE MUST CONTINUE TO FUNCTION, ESPECIALLY DURING STORM CONDITIONS AND APPROVED PROTECTIVE MEASURES AND TEMPORARY DRAINAGE PROVISIONS MUST BE USED TO PROTECT ADJOINING PROPERTIES DURING THE GRADING PROJECT. IN ALL CASES, THE CONTRACTOR SHALL BE HELD LIABLE FOR ANY DAMAGE DUE TO CONSTRUCTING NATURAL OR EXISTING DRAINAGE PATTERNS.
16. ALL PLANTERS ADJACENT TO THE FOUNDATIONS SHALL BE SEALED ALONG SIDE OF THE FOUNDATION FOOTING AND EXTENDED UNDER THE PLANTER AREA TO A MINIMUM OF 12 INCHES TO PREVENT MOISTURE FROM REACHING THE FOUNDATION SUBGRADE SOILS.
17. EXPORT SOILS MUST GO TO A LEGAL DUMP SITE OR TO A PERMITTED SITE APPROVED BY THE LOCAL AGENCY HAVING JURISDICTION.
18. ANY DIRT, ROCK OR CONSTRUCTION MATERIAL THAT MAY BE TRACKED OR DROPPED WITHIN THE PUBLIC RIGHT-OF-WAY DURING THE TRANSPORTATION OF SAID MATERIAL OR EQUIPMENT ASSOCIATED WITH THE PROJECT SHALL BE CLEANED OR REMOVED DAILY AND AS DEEMED NECESSARY BY THE CONSTRUCTION MANAGER.
19. DIRT ACCESS RAMPS OVER CURB AND GUTTER TO CONSTRUCTION SITE ARE NOT ALLOWED. WHEN NECESSARY FOR ENTRANCE TO SUCH CONSTRUCTION SITES, ASPHALT RAMPS WITH A MINIMUM 3' DIAMETER PIPE WILL BE CONSTRUCTED TO CONVEY GUTTER DRAINAGE. ALL BASE, GRAVEL, SOIL OR OTHER MATERIAL CARRIED INTO THE ROADWAY BY CONTRACTORS PERSONNEL OR EQUIPMENT WILL BE CLEANED AS NECESSARY AND NO LESS THAN ONCE A DAY. TRUCKS HAULING BASE, GRAVEL, FILL OR EXPORT MATERIALS WILL BE TARPED AS NECESSARY TO PREVENT MATERIAL FROM SPILLING INTO THE ROADWAY.
20. PRIOR TO ANY CONSTRUCTION WHICH INVOLVES HAZARDOUS CONDITIONS, THE CONTRACTOR SHALL FIRST OBTAIN A PERMIT FROM THE DIVISION OF OCCUPATIONAL SAFETY AND HEALTH (OSHA).
21. PROPOSED REVISIONS TO THE GRADING PLAN SHALL BE DRAWN IN RED PENCIL ON BOND COPIES OF THE APPROVED PLAN. THESE REDLINES ARE THEN TO BE SUBMITTED TO THE OWNERS REPRESENTATIVES FOR REVIEW AND APPROVAL. ONLY AFTER THE BOND COPIES APPROVAL IS GIVEN SHOULD THE ORIGINALS BE AS-BUILT BY THE ENGINEER/ARCHITECT.
22. RULE 403, AIR QUALITY CONTROL MANAGEMENT DISTRICT, MUST BE IMPLEMENTED DURING CONSTRUCTION.
    a. A PERSON SHALL NOT CAUSE OR ALLOW THE EMISSIONS OF FUGITIVE DUST FROM ANY TRANSPORT, HANDLING, CONSTRUCTION OR STORAGE ACTIVITY SO THAT THE PRESENCE OF SUCH DUST REMAINS VISIBLE IN THE ATMOSPHERE BEYOND THE PROPERTY LINE OF THE EMISSION SOURCE. (DOES NOT APPLY TO EMISSION EMANATING FROM UNPAVED ROADWAYS OPEN TO PUBLIC TRAVEL OR FARM ROADS. THIS EXCLUSION SHALL NOT APPLY TO INDUSTRIAL OR COMMERCIAL FACILITIES).
    b. A PERSON SHALL TAKE EVERY REASONABLE PRECAUTION TO MINIMIZE FUGITIVE DUST EMISSIONS FROM WRECKING EXCAVATION GRADING, CLEARING OF LAND AND SOLID WASTE DISPOSAL OPERATIONS.
    c. A PERSON SHALL NOT CAUSE OR ALLOW PARTICULATE WATER TO EXCEED 100 MICROGRAMS PER CUBIC METER WHEN DETERMINED AS THE DIFFERENCE BETWEEN UPWIND AND DOWN WIND SAMPLES COLLECTED ON HIGH VOLUME SAMPLERS AT THE PROPERTY LINE FOR A MINIMUM OF FIVE HOURS.
    d. A PERSON SHALL TAKE EVERY REASONABLE PRECAUTION TO PREVENT VISIBLE PARTICULATE WATER FROM BEING DEPOSITED UPON PUBLIC ROADWAYS. PRECAUTIONS SHALL INCLUDE BUT ARE NOT LIMITED TO, THE REMOVAL OF PARTICULATE MATTER FROM EQUIPMENT PRIOR TO MOVEMENT ON PAVED STREETS ONTO WHICH SUCH MATERIAL HAS BEEN DEPOSITED.
    e. SUBSECTIONS (A) AND (B) SHALL NOT BE APPLICABLE WHEN THE WIND SPEED INSTANTANEOUSLY EXCEEDS 40 KILOMETERS (25 MILES) PER HOUR, OR WHEN THE AVERAGE WIND SPEED IS GREATER THAN 24 KILOMETERS (15 MILES) PER HOUR. THE AVERAGE WIND SPEED DERMINATIONS SHALL BE ON A 15 MINUTE AVERAGE AT THE NEAREST OFFICIAL AIR-MONITORING STATION OR BY WIND INSTRUMENT LOCATED AT THE SITE BEING CHECKED.
23. CONTRACTORS SHALL USE LOW EMISSION MOBILE CONSTRUCTION EQUIPMENT DURING ALL SITE PREPARATION, GRADING AND CONSTRUCTION ACTIVITIES, WHERE FEASIBLE.
24. CONTRACTORS SHALL MAINTAIN ALL CONSTRUCTION ENGINES TUNED CONSISTENT WITH MANUFACTURER'S SPECIFICATIONS DURING ALL SITE PREPARATION, GRADING AND CONSTRUCTION ACTIVITIES.
25. CONTRACTORS SHALL USE LOW SULFUR FUEL FOR STATIONARY CONSTRUCTION EQUIPMENT AS REQUIRED BY AQMD RULES 431.1 AND 431.2 AND SHALL USE EXISTING POWER SOURCES AND CLEAN FUEL GENERATORS AS FEASIBLE, DURING ALL SITE PREPARATION, GRADING AND CONSTRUCTION ACTIVITIES.
26. CONSTRUCTION PARKING SHALL BE ONSITE. TRAFFIC CONTROL AND ACCESS SHALL BE IN ACCORDANCE WITH COUNTY CONSTRUCTION REQUIREMENTS
27. THE SPEED OF TRUCKS ONSITE SHALL BE LIMITED TO 15 MPH.
28. TRUCKS AND LARGE CONSTRUCTION VEHICLES SHALL OBTAIN APPROVED TRUCK ROUTES FROM THE AGENCIES HAVING JURISDICTION OVER PROPOSED ROUTES.
29. THE CONTRACTOR SHALL CONTROL DUST IN AREAS USED FOR OFF-ROAD PARKING MATERIALS LAYDOWN OR THOSE AWAITING FUTURE CONSTRUCTION. FREQUENTLY ACCESSED AREAS SHALL BE PAVED AS EARLY AS POSSIBLE TO MINIMIZE DIRT TRACKOUT TO THE PUBLIC RIGHT OF WAY.
30. THE CONTRACTOR SHALL BE RESPONSIBLE FOR THE FOLLOWING MEASURES:
    a. CESSATION OF ACTIVITIES DURING A STAGE-2 SMOG EPISODE. CALL 1-800-242-4022 FOR THE DAILY SMOG FORECAST.
    b. TRUCK ROUTES AND SCHEDULES FOR THE RECEIPT OF MATERIALS SHALL BE COORDINATED WITH THE MANAGER OF BUILDING AND SAFETY.
    c. WHERE FEASIBLE, ON-ROAD VEHICLES AND OFF-ROAD EQUIPMENT SHALL BE TURNED OFF AND SUBSEQUENTLY RESTARTED IF THE ANTICIPATED DURATION OF IDLING IS EXPECTED TO EXCEED FIVE (5) MINUTES.
31. THE CONTRACTOR SHALL IMPLEMENT THE FOLLOWING HIGH WIND DUST CONTROL WHEN WIND GUSTS EXCEED 25 MPH:
    a. TERMINATION/MODIFICATION OF OPERATION OF SCRAPERS, GRADERS OR DOZERS ON UNPAVED SURFACES UNTIL WINDS SUBSIDE.
    b. APPLICATION OF WATER AS NEEDED TO ANY UNPAVED SURFACE WITH VEHICLE OR EQUIPMENT OPERATIONS.
    c. APPLICATION OF WATER OR OTHER DUST CONTROL MATERIAL TO ANY PREVIOUSLY GRADED SURFACE IF DUST EMANATION IS VISIBLE FROM SUCH A SURFACE.
32. THE CONTRACTOR SHALL BE RESPONSIBLE FOR MAINTAINING EQUIPMENT TO PREVENT VISIBLE SOOT FROM REDUCING LIGHT TRANSMISSION THROUGH THE EXHAUST STACK BY MORE THAN 20 PERCENT FOR MORE THAN THREE MINUTES PER HOUR AND USE LOW-SULFER FUEL AS REQUIRED BY SCAQMD REGULATIONS.
33. TRUCKS USED IN HAULING DIRT TO OR FROM THE SITE ON PUBLIC ROADS WILL BE COVERED OR WILL MAINTAIN A SIX INCH DIFFERENTIAL BETWEEN THE MAXIMUM HEIGHT OF ANY HAULED MATERIAL AND THE TOP OF THE TRAILER. HAUL TRUCK DRIVERS WILL LOAD PRIOR TO LEAVING THE SITE TO PREVENT SOIL LOSS DURING TRANSPORTATION.
34. PURSUANT TO SECTION 8771 OF THE BUSINESS AND PROFESSIONS CODE, EXISTING SURVEY MONUMENTS SHALL BE NOTED AND DOCUMENTED BEFORE CONSTRUCTION. IF MONUMENTS ARE DISTURBED DURING CONSTRUCTION, THE CONTRACTOR SHALL PAY A LICENSED LAND SURVEYOR OR REGISTERED ENGINEER TO RESET SUCH MONUMENTS.

REVIEWED FOR CODE COMPLIANCE BY:
WILLDAN ENGINEERING

Approval of these plans & specifications shall not be construed to be a permit for, or an approval of any violation of any Federal, State, County or City laws or ordinances. One set of approved plans must be kept on the job until completion.

12:12:25 PM Jul 20, 2025

EXISTING UTILITY NOTES

1. THE GENERAL CONTRACTOR SHALL CONTACT UNDERGROUND SERVICE ALERT AND NOTIFY APPROPRIATE UTILITY AGENCIES TO VERIFY AND LOCATE ALL EXISTING UNDERGROUND UTILITIES BEFORE COMMENCING ANY EXCAVATION.
2. THE GENERAL CONTRACTOR SHALL POTHOLE TO LOCATE AND VERIFY ALL EXISTING UTILITIES, POINT OF CONNECTIONS, AND CROSSINGS. ANY DISCREPANCIES SHALL BE BROUGHT TO THE IMMEDIATE ATTENTION OF THE OWNERS REPRESENTATIVE.
3. THE LOCATIONS OF EXISTING AND NEW UNDERGROUND UTILITIES ARE SHOWN IN AN APPROXIMATE WAY ONLY; ALL UTILITIES MAY NOT BE SHOWN.
4. SOME EXISTING UTILITY CONDUIT LOCATIONS AND SIZES ARE UNKNOWN AND ARE NOT IDENTIFIED HEREON.
5. SUBSURFACE UTILITIES SHOWN HEREON HAVE BEEN COMPILED FROM RECORD INFORMATION GATHERED FROM VARIOUS SOURCES. THE SUBSURFACE INFORMATION, INCLUDING LOCATION, SIZES, AND CAPACITIES IS AN ESTIMATION BASED ON AVAILABLE DATA AND MAY NOT REPRESENT ACTUAL FIELD CONDITIONS. ECG DOES NOT WARRANT THE ACCURACY OF COMPLETENESS OF SAID RECORD INFORMATION.
6. THE CONTRACTOR, BY ACCEPTING THESE PLANS OR PROCEEDING WITH IMPROVEMENTS PURSUANT THERETO, UNDERSTANDS THAT THEY AGREE TO ASSUME LIABILITY, AND AGREE TO HOLD THE UNDERSIGNED HARMLESS FOR ANY LIABILITY FOR DAMAGE RESULTING FROM THE EXISTENCE OF UNDERGROUND UTILITIES OR STRUCTURES NOT REPORTED TO THE UNDERSIGNED, NOT INDICATED ON THE RECORDS PROVIDED, LOCATED AT VARIANCE WITH THAT REPORTED OR SHOWN ON AVAILABLE RECORDS. THE CONTRACTOR IS REQUIRED TO TAKE DUE PRECAUTIONARY MEASURES TO PROTECT THE UTILITIES OR STRUCTURES FOUND AT THE SITE. IT SHALL BE THE CONTRACTOR'S RESPONSIBILITY TO NOTIFY THE OWNERS OF THE UTILITIES OR STRUCTURES CONCERNED BEFORE STARTING TO WORK.
7. THE CONTRACTOR SHALL MAINTAIN EXISTING UTILITY SERVICES TO BUILDINGS OR OTHER STRUCTURES INTENDED TO REMAIN IN OPERATIONAL SERVICE DURING THE COURSE OF CONSTRUCTION.

STORMWATER POLLUTION PLAN NOTES

1. IN CASE OF EMERGENCY CALL: TO BE DETERMINED
2. A STAND-BY CREW FOR EMERGENCY WORK SHALL BE AVAILABLE AT ALL TIMES DURING THE RAINY SEASON (NOVEMBER 1 TO APRIL 15). NECESSARY MATERIALS SHALL BE AVAILABLE ON-SITE AND STOCKPILED AT CONVENIENT LOCATIONS TO FACILITATE RAPID CONSTRUCTION OF EMERGENCY DEVICES WHEN RAIN IS IMMINENT.
3. EROSION CONTROL DEVICES SHOWN ON THIS PLAN MAY BE REMOVED WHEN APPROVED BY THE BUILDING OFFICIAL IF THE GRADING OPERATION HAS PROGRESSED TO THE POINT WHERE THEY ARE NO LONGER REQUIRED.
4. GRADED AREAS ADJACENT TO FILL SLOPES LOCATED AT THE SITE PERIMETER MUST DRAIN AWAY FROM THE TOP OF SLOPE AT THE CONCLUSION OF EACH WORKING DAY. ALL LOOSE SOILS AND DEBRIS THAT MAY CREATE A POTENTIAL HAZARD TO OFF-SITE PROPERTY SHALL BE STABILIZED OR REMOVED FROM THE SITE ON A DAILY BASIS.
5. ALL SILT AND DEBRIS SHALL BE REMOVED FROM ALL DEVICES WITHIN 24 HOURS AFTER EACH RAINSTORM AND BE DISPOSED OF PROPERLY.
6. A GUARD SHALL BE POSTED ON THE SITE WHENEVER THE DEPTH OF WATER IN ANY DEVICE EXCEEDS TWO FEET. THE DEVICE SHALL BE DRAINED OR PUMPED DRY WITHIN 24 HOURS AFTER EACH RAINSTORM. PUMPING AND DRAINING OF ALL BASINS AND DRAINAGE DEVICES MUST COMPLY WITH THE APPROPRIATE BMP FOR DEWATERING OPERATIONS.
7. THE PLACEMENT OF ADDITIONAL DEVICES TO REDUCE EROSION DAMAGE AND CONTAIN POLLUTANTS WITHIN THE SITE IS LEFT TO THE DISCRETION OF THE FIELD ENGINEER. ADDITIONAL DEVICES AS NEEDED SHALL BE INSTALLED TO RETAIN SEDIMENTS AND OTHER POLLUTANTS ON SITE.
8. DESILTING BASIN MAY NOT BE REMOVED OR MADE INOPERABLE BETWEEN NOVEMBER 1 AND APRIL 15 OF THE FOLLOWING YEAR WITHOUT THE APPROVAL OF THE BUILDING OFFICIAL. STORM WATER POLLUTION AND EROSION CONTROL DEVICES ARE TO BE MODIFIED, AS NEEDED, AS THE PROJECT PROGRESSES, THE DESIGN AND PLACEMENT OF THESE DEVICES IS THE RESPONSIBILITY OF THE FIELD ENGINEER.
9. PLANS REPRESENTING CHANGES MUST BE SUBMITTED FOR APPROVAL IF REQUESTED BY THE BUILDING OFFICIAL.
10. EVERY EFFORT SHOULD BE MADE TO ELIMINATE THE DISCHARGE OF NON STORM WATER FROM THE PROJECT SITES AT ALL TIMES.
11. ERODED SEDIMENTS AND OTHER POLLUTANTS MUST BE RETAINED ON-SITE AND MAY NOT BE TRANSPORTED FROM THE SITE VIA SHEET FLOW, SWALES, AREA DRAINS, NATURAL DRAINAGE COURSES OR WIND.
12. STOCKPILES OF EARTH AND OTHER CONSTRUCTION-RELATED MATERIALS MUST BE PROTECTED FROM BEING TRANSPORTED FROM THE SITE BY THE FORCES OF WIND OR WATER.
13. FUELS, OILS, SOLVENTS, AND OTHER TOXIC MATERIALS MUST BE STORED IN ACCORDANCE WITH THEIR LISTING AND AREA NOT TO CONTAMINATE THE SOILS AND SURFACE WATERS. ALL APPROVED STORAGE CONTAINERS ARE TO BE PROTECTED FROM THE WEATHER. SPILLS MUST BE CLEANED UP IMMEDIATELY AND DISPOSED OF IN A PROPER MANNER. SPILLS MAY NOT BE WASHED INTO THE DRAINAGE SYSTEM.
14. EXCESS OR WASTE CONCRETE MAY NOT BE WASHED INTO THE PUBLIC WAY OR ANY OTHER DRAINAGE SYSTEM. PROVISIONS SHALL BE MADE TO RETAIN CONCRETE WASTES ON-SITE UNTIL THEY CAN BE DISPOSED OF AS SOLID WASTE.
15. CONTRACTORS ARE RESPONSIBLE TO INSPECT ALL EROSION CONTROL DEVICES BMPs ARE INSTALLED AND FUNCTIONING PROPERLY IF THERE IS A 40% CHANCE OF 0.25 INCHES OR GREATER OF PREDICTED PRECIPITATION, AND AFTER ACTUAL PRECIPITATION. A CONSTRUCTION SITE INSPECTION CHECKLIST AND INSPECTION LOG SHALL BE MAINTAINED AT THE PROJECT SITE AT ALL TIMES AND AVAILABLE FOR REVIEW BY THE BUILDING OFFICIAL. (COPIES OF THE SELF INSPECTION CHECK LIST AND INSPECTION LOGS ARE AVAILABLE UPON REQUEST).
16. TRASH AND CONSTRUCTION-RELATED SOLID WASTES MUST BE DEPOSITED INTO A COVERED RECEPTACLE TO PREVENT CONTAMINATION OR RAINWATER AND DISPERSAL BY WIND.
17. SEDIMENTS AND OTHER MATERIALS MAY NOT BE TRACKED FROM THE SITE BY VEHICLE TRAFFIC. THE CONSTRUCTION ENTRANCE ROADWAYS MUST BE STABILIZED SO AS TO INHIBIT SEDIMENTS FROM BEING DEPOSITED INTO THE PUBLIC WAY. ACCIDENTAL DEPOSITIONS MUST BE SWEPT UP IMMEDIATELY AND MAY NOT BE WASHED DOWN BY RAIN OR OTHER MEANS.
18. ANY SLOPES WITH DISTURBED SOILS OR DENUDED OF VEGETATION MUST BE STABILIZED SO AS TO INHIBIT EROSION BY WIND AND WATER.
19. THE FOLLOWING BMPs FROM THE "CALIFORNIA STORM WATER BMP CONSTRUCTION HANDBOOK" - LATEST EDITION, MUST BE IMPLEMENTED FOR ALL CONSTRUCTION ACTIVITIES AS APPLICABLE.

EROSION CONTROL:
- EC-1 SCHEDULING
- EC-2 PRESERVATION OF EXISTING VEGETATION
- EC-3 HYDRAULIC MULCH
- EC-4 HYDROSEEDING
- EC-5 SOIL BINDERS
- EC-6 STRAW MULCH
- EC-7 GEOTEXTILES & MATS
- EC-8 WOOD MULCHING
- EC-9 EARTH DIKES AND DRAINAGE SWALES
- EC-10 VELOCITY DISSIPATION DEVICES
- EC-11 SLOPE DRAINS
- EC-12 STREAMBANK STABILIZATION
- EC-13 RESERVED
- EC-14 COMPOST BLANKETS
- EC-15 SOIL PREPARATION/ROUGHENING
- EC-16 NON-VEGETATIVE STABILIZATION

TEMPORARY SEDIMENT CONTROL:
- SE-1 SILT FENCE
- SE-2 SEDIMENT BASIN
- SE-3 SEDIMENT TRAP
- SE-4 CHECK DAM
- SE-5 FIBER ROLLS
- SE-6 GRAVEL BAG BERM
- SE-7 STREET SWEEPING AND VACUUMING
- SE-8 SANDBAG BARRIER
- SE-9 STRAW BALE BARRIER
- SE-10 STORM DRAIN INLET PROTECTION
- SE-11 ACTIVE TREATMENT SYSTEMS
- SE-12 TEMPORARY SILT DIKE
- SE-13 COMPOST SOCKS AND BERMS
- SE-14 BIOFILTER BAGS

EQUIPMENT TRACKING CONTROL:
- TC-1 STABILIZED CONSTRUCTION ENTRANCE/EXIT
- TC-2 STABILIZED CONSTRUCTION ROADWAY
- TC-3 ENTRANCE/OUTLET TIRE WASH

WIND EROSION CONTROL:
- WE-1 WIND EROSION CONTROL

NON-STORMWATER MANAGEMENT:
- NS-1 WATER CONSERVATION PRACTICES
- NS-2 DEWATERING OPERATIONS
- NS-3 PAVING AND GRINDING OPERATIONS
- NS-4 TEMPORARY STREAM CROSSING
- NS-5 CLEAR WATER DIVERSION
- NS-6 ILLICIT CONNECTION/DISCHARGE
- NS-7 POTABLE WATER/IRRIGATION
- NS-8 VEHICLE AND EQUIPMENT CLEANING
- NS-9 VEHICLE AND EQUIPMENT FUELING
- NS-10 VEHICLE AND EQUIPMENT MAINTENANCE
- NS-11 PILE DRIVING OPERATIONS
- NS-12 CONCRETE CURING
- NS-13 CONCRETE FINISHING
- NS-14 MATERIAL OVER WATER
- NS-15 DEMOLITION ADJACENT TO WATER
- NS-16 TEMPORARY BATCH PLANTS

WASTE MANAGEMENT & MATERIAL POLLUTION CONTROL:
- WM-1 MATERIAL DELIVERY AND STORAGE
- WM-2 MATERIAL USE
- WM-3 STOCKPILE MANAGEMENT
- WM-4 SPILL PREVENTION AND CONTROL
- WM-5 SOLID WASTE MANAGEMENT
- WM-6 HAZARDOUS WASTE MANAGEMENT
- WM-7 CONTAMINATED SOIL MANAGEMENT
- WM-8 CONCRETE WASTE MANAGEMENT
- WM-9 SANITARY/SEPTIC WASTE MANAGEMENT
- WM-10 LIQUID WASTE MANAGEMENT

NOTE:
SITE INSPECTIONS ARE REQUIRED BEFORE AND AFTER STORMS TO ENSURE THAT ALL BMP'S ARE FUNCTIONAL AND TO DETERMINE MAINTENANCE.

811 Know what's below. Call before you dig.

AGENCY

FLEWELLING & MOODY
architecture planning interiors

HEADQUARTERS OFFICE:
99 S. Lake Ave., Suite 300
Pasadena, CA 91101
323.543.8300
E-Mail: fm-pasadena@flewelling-moody.com

ANTELOPE VALLEY OFFICE:
1035 West Lancaster Boulevard
Lancaster, California 93534
661.949.0771
E-Mail: fm-lancaster@flewelling-moody.com

An Employee Owned Corporation

ARCHITECT

CONSULTANT

REGISTERED PROFESSIONAL ENGINEER
JOSIAH D. JENISON
NO 77454
CIVIL
STATE OF CALIFORNIA

ECG
Encompass Consultant Group
2515 MthemeStreet, SUITE 4220, SANTA CLARITA, CA 91355
PHONE: 661.600.9367 WEBSITE: WWW.ECGCIVIL.COM

Drawn by

Checked by

Revisions

No.	Date	Description

All dimensions must be checked at the job by the contractor who accepts full responsibility for their accuracy under the contract. These plans & the specifications in connection therewith have been prepared for a specific site. Any and all responsibility for their use in whole or in part on any other site is hereby disclaimed by Flewelling & Moody.

CITY OF RIDGECREST

SGT. JOHN PINNEY MEMORIAL POOL REPLACEMENT

205 S WARNER ST.
RIDGECREST, CA 93555

GENERAL NOTES

Job No. 3055-0100

Date 05/02/2025

C1.02

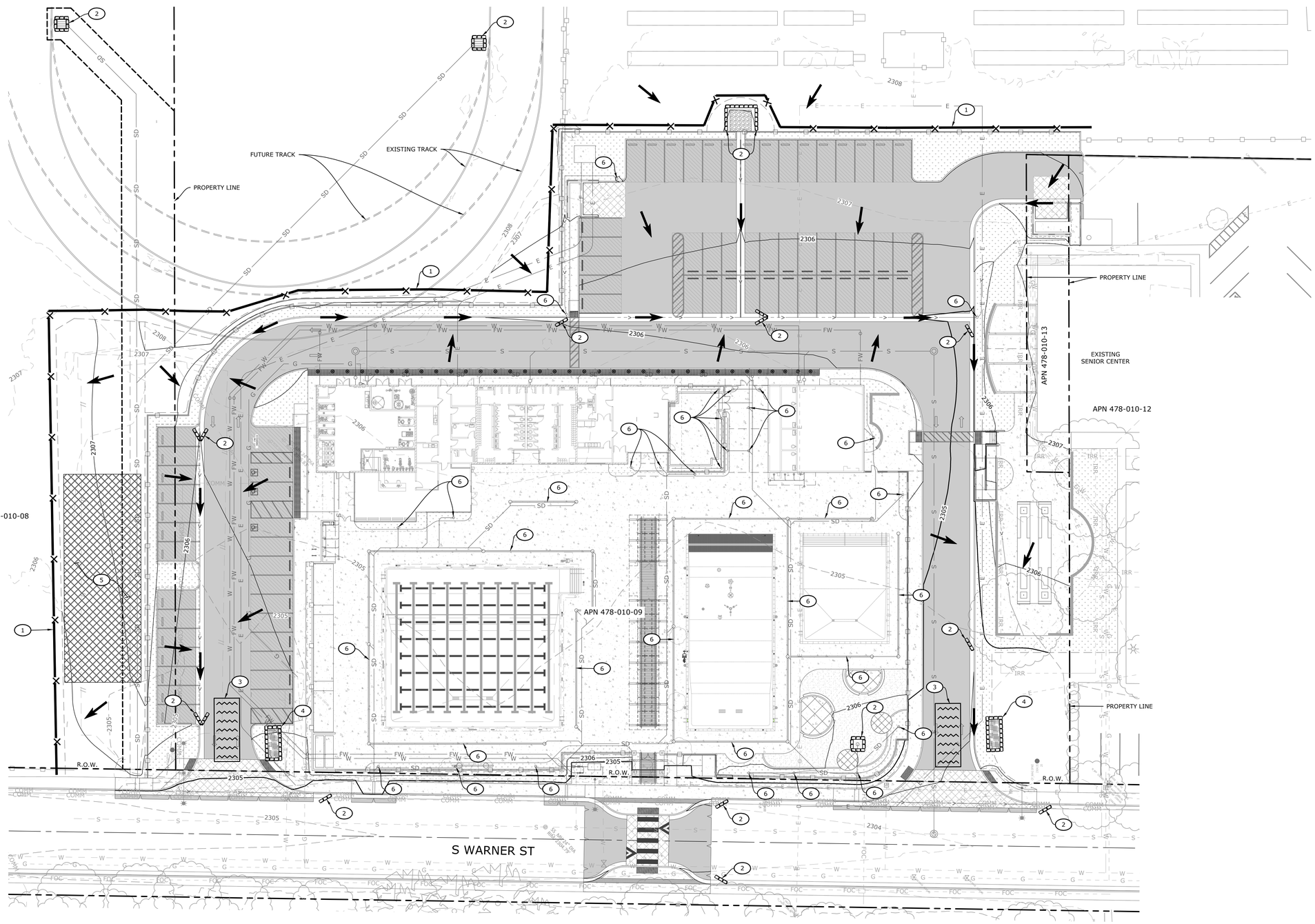

EROSION CONTROL CONSTRUCTION NOTES

1. CONSTRUCT SILT FENCE PER STD. PLATE BMP-10 IN CURRENT KERN COUNTY DEVELOPMENT STANDARDS (DETAIL ON SHEET C2.02) PRIOR TO AND DURING GRADING.
2. CONSTRUCT TEMPORARY GRAVEL BAG CHECK DAM OR CATCH BASIN SEDIMENT BARRIER PER STD. PLATE BMP-1 IN CURRENT KERN COUNTY DEVELOPMENT STANDARDS (DETAIL ON SHEET C2.02). ALL GRAVEL BAGS MUST BE IN PLACE DURING PROJECT CONSTRUCTION.
3. CONSTRUCT "RUMBLE RACKS" AT ALL CONSTRUCTION SITE EXITS (MINIMUM 30-FEET BY 12-FEET WIDE) PER STD. PLATE BMP-3 THROUGH BMP-5 IN CURRENT KERN COUNTY DEVELOPMENT STANDARDS (DETAILS ON SHEET C2.02). RECOMMENDED LOCATIONS SHOWN. CONTRACTOR TO SUBMIT FINAL LOCATION TO OWNER FOR APPROVAL PRIOR TO CONSTRUCTION.
4. PROPOSED CONCRETE WASH-OFF AREA PER STD. PLATE BMP-8 IN CURRENT KERN COUNTY DEVELOPMENT STANDARDS (DETAIL ON SHEET C2.02). WASH-OFF AREA SHALL BE IN PLACE AT ALL TIMES DURING GRADING AND PAVING OPERATIONS. CONTRACTOR SHALL NOT TRACK SOLIDS OR CONCRETE WASH OUT OR DEBRIS ON PUBLIC ROADWAYS. RECOMMENDED LOCATION SHOWN. CONTRACTOR SHALL SUBMIT FINAL LOCATION TO OWNER FOR APPROVAL PRIOR TO CONSTRUCTION.
5. PROPOSED STOCKPILE AND MATERIAL STORAGE AREA PER STD. PLATE BMP-7 IN CURRENT KERN COUNTY DEVELOPMENT STANDARDS (DETAIL ON SHEET C2.02).
6. CONSTRUCT GEOTEXTILE FILTER FABRIC OVER INLET TO PROTECT AREA DRAINS OR POOL DECK SLOT DRAINS DURING CONSTRUCTION.

FLOW DIRECTION

REVIEWED FOR CODE COMPLIANCE BY: WILLDAN ENGINEERING

Approval of these plans & specifications shall not be construed to be a permit for, or an approval of any violation of any Federal, State, County or City laws, or ordinances. One set of approved plans must be kept on the job until completion.

12:12:25 PM Jul 20, 2025

SCALE: 1"=20'

0 20 40 60

Know what's below. Call before you dig.

AGENCY

FLEWELLING & MOODY
architecture planning interiors

HEADQUARTERS OFFICE:
99 S. Lake Ave., Suite 300
Pasadena, CA 91101
323.543.8300
E-Mail: fm-pasadena@flewelling-moody.com

ANTELOPE VALLEY OFFICE:
1035 West Lancaster Boulevard
Lancaster, California 93534
661.949.0771
E-Mail: fm-lancaster@flewelling-moody.com

An Employee Owned Corporation

ARCHITECT

CONSULTANT

REGISTERED PROFESSIONAL ENGINEER
JOSIAH D. JENISON
NO 77454
CIVIL
STATE OF CALIFORNIA

ECG
Encompass Consultant Group
25115 AVE STANFORD, SUITE A320, SANTA CLARITA, CA 91355
PHONE: 661.600.9367 WEBSITE: WWW.ECGCIVIL.COM

Drawn by

Checked by

Revisions

No.	Date	Description

All dimensions must be checked at the job by the contractor who accepts full responsibility for their accuracy under the contract. These plans & the specifications in connection therewith have been prepared for a specific site. Any and all responsibility for their use in whole or in part on any other site is hereby disclaimed by Flewelling & Moody.

CITY OF RIDGECREST

SGT. JOHN PINNEY MEMORIAL POOL REPLACEMENT

205 S WARNER ST.
RIDGECREST, CA 93555

EROSION CONTROL PLAN

Job No. 3055-0100

Date 05/02/2025

C2.01

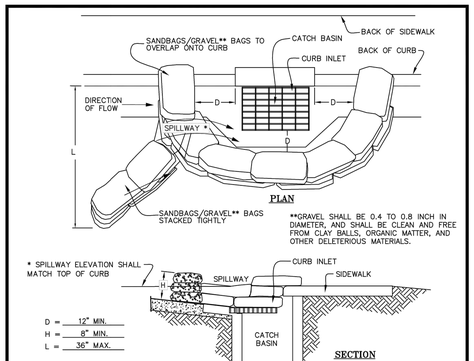

NOTES:

1. CATCH BASIN/INLET PROTECTION SHALL BE INSTALLED WHEREVER THERE IS A POTENTIAL OF STORMWATER OR NON-STORMWATER BEING DISCHARGED INTO IT.
2. INLET PROTECTION IS REQUIRED ALONG WITH OTHER POLLUTION PREVENTION MEASURES SUCH AS; EROSION CONTROL, SOIL STABILIZATION, AND MEASURES TO PREVENT TRACKING ONTO PAVED SURFACES.
3. MODIFY INLET PROTECTION AS NEEDED TO AVOID CREATING TRAFFIC HAZARDS.
4. INCLUDE INLET PROTECTION MEASURES AT HILLSIDE V-DITCHES AND MISC. DRAINAGE SWALES.
5. INLET PROTECTION SHALL BE INSPECTED AND ACCUMULATED SEDIMENTS REMOVED. SEDIMENT SHALL BE DISPOSED OF PROPERLY AND IN A MANNER THAT ASSURES THAT THE SEDIMENT DOES NOT ENTER THE STORM DRAIN SYSTEM.
6. DAMAGED BAGS SHALL BE REPLACED IMMEDIATELY.
7. ADDITIONAL SANDBAG SEDIMENT TRAPS SHALL BE PLACED AT INTERVALS AS INDICATED ON SITE PLAN.

CATCH BASIN/INLET PROTECTION

KERN COUNTY PUBLIC WORKS — GROUNDED: BOUNDLESS

NPDES BMP SEDIMENT AND EROSION CONTROL

COUNTY OF KERN
STATE OF CALIFORNIA
DEVELOPMENT STANDARD

REVISIONS DATE	DESC
–	–
–	–
–	–
–	–
–	–

DRAFTED BY: R.R.P.
DESIGNED BY: J.R.C.
DATE DRAFTED: 09/30/23
APPROVED BY: J.R.C.

PLATE NO. BMP-1

DWG FILE: K:\BUILDINGDEV\DEVELOPMENT REVIEW\DEV_STD\2023\2023 REVISED DRAWINGS\BMP\BMP-1

317

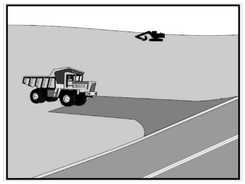

NOTES:

1. SEDIMENTS AND OTHER MATERIALS SHALL NOT BE TRACKED FROM THE SITE BY VEHICLE TRAFFIC. THE CONSTRUCTION ENTRANCE ROADWAYS SHALL BE STABILIZED SO AS TO PREVENT SEDIMENTS FROM BEING DEPOSITED INTO THE PUBLIC ROADS. SEDIMENT DEPOSITED ON THE ROADWAY MUST BE SWEPT UP IMMEDIATELY AND MAY NOT BE WASHED DOWN BY RAIN OR OTHER MEANS INTO THE STORM DRAIN SYSTEM. SEE TYPE 1 AND TYPE 2 DETAILS.
2. STABILIZED CONSTRUCTION ENTRANCE SHALL BE:
   A. LOCATED AT ANY POINT WHERE TRAFFIC WILL BE ENTERING OR LEAVING A CONSTRUCTION SITE TO OR FROM A PUBLIC RIGHT OF WAY, STREET, ALLEY, AND SIDEWALK OR PARKING AREA.
   B. A SERIES OF STEEL PLATES WITH "RUMBLE STRIPS", AND/OR MIN >3" TO <6" CRUSHED AGGREGATE WITH LENGTH, WIDTH & THICKNESS AS NEEDED TO ADEQUATELY PREVENT ANY TRACKING ONTO PAVED SURFACES. ALL STEEL PLATES WITH "RUMBLE STRIPS" SHALL BE PLACED OUTSIDE THE PUBLIC RIGHT-OF-WAY.
3. ADDING A WASH RACK WITH A SEDIMENT TRAP LARGE ENOUGH TO COLLECT ALL WASH WATER CAN GREATLY IMPROVE EFFICIENCY.
4. ALL VEHICLES ACCESSING THE CONSTRUCTION SITE SHALL UTILIZE THE STABILIZED CONSTRUCTION ENTRANCE SITES.
   A. REMOVE ALL SEDIMENT DEPOSITED ON PAVED ROADWAYS IMMEDIATELY.
   B. SWEEP PAVED AREAS THAT RECEIVE CONSTRUCTION TRAFFIC WHENEVER SEDIMENT BECOMES VISIBLE.
   C. PAVEMENT WASHING WITH WATER IS PROHIBITED IF IT RESULTS IN A DISCHARGE TO THE STORM DRAIN SYSTEM.

STABILIZED CONSTRUCTION ENTRANCE/EXIT

KERN COUNTY PUBLIC WORKS — GROUNDED: BOUNDLESS

NPDES BMP SEDIMENT AND EROSION CONTROL

COUNTY OF KERN
STATE OF CALIFORNIA
DEVELOPMENT STANDARD

REVISIONS DATE	DESC
–	–
–	–
–	–
–	–
–	–

DRAFTED BY: R.R.P.
DESIGNED BY: J.R.C.
DATE DRAFTED: 09/30/23
APPROVED BY: J.R.C.

PLATE NO. BMP-3

DWG FILE: K:\BUILDINGDEV\DEVELOPMENT REVIEW\DEV_STD\2023\2023 REVISED DRAWINGS\BMP\BMP-3

319

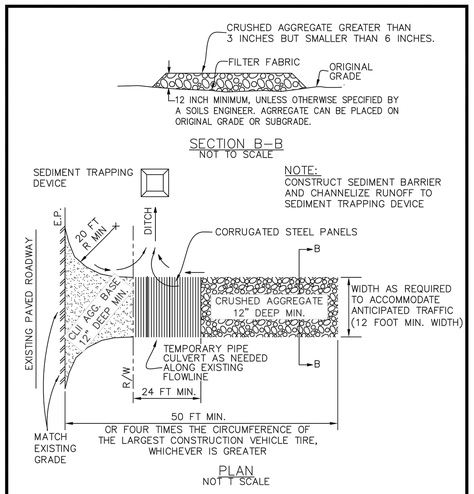

TYPE 1 GRAVEL ENTRANCE/EXIT

STABILIZED CONSTRUCTION ENTRANCE/EXIT

KERN COUNTY PUBLIC WORKS — GROUNDED: BOUNDLESS

NPDES BMP SEDIMENT AND EROSION CONTROL

COUNTY OF KERN
STATE OF CALIFORNIA
DEVELOPMENT STANDARD

REVISIONS DATE	DESC
–	–
–	–
–	–
–	–
–	–

DRAFTED BY: R.R.P.
DESIGNED BY: J.R.C.
DATE DRAFTED: 09/30/23
APPROVED BY: J.R.C.

PLATE NO. BMP-4

DWG FILE: K:\BUILDINGDEV\DEVELOPMENT REVIEW\DEV_STD\2023\2023 REVISED DRAWINGS\BMP\BMP-4

320

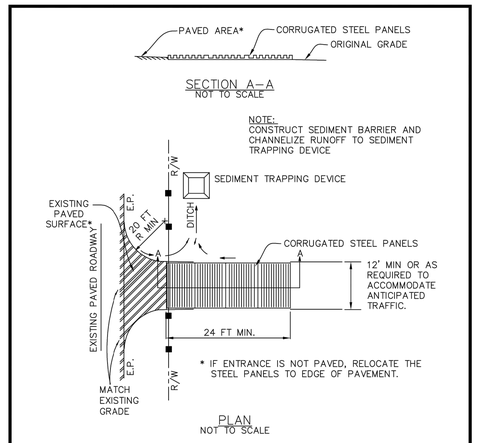

TYPE 2 ALTERNATIVE ENTRANCE/EXIT

USE OF CORRUGATED STEEL PLATES, SHAKER PLATES, RUMBLE PLATES, ETC.

STABILIZED CONSTRUCTION ENTRANCE/EXIT

KERN COUNTY PUBLIC WORKS — GROUNDED: BOUNDLESS

NPDES BMP SEDIMENT AND EROSION CONTROL

COUNTY OF KERN
STATE OF CALIFORNIA
DEVELOPMENT STANDARD

REVISIONS DATE	DESC
–	–
–	–
–	–
–	–
–	–

DRAFTED BY: R.R.P.
DESIGNED BY: J.R.C.
DATE DRAFTED: 09/30/23
APPROVED BY: J.R.C.

PLATE NO. BMP-5

DWG FILE: K:\BUILDINGDEV\DEVELOPMENT REVIEW\DEV_STD\2023\2023 REVISED DRAWINGS\BMP\BMP-5

321

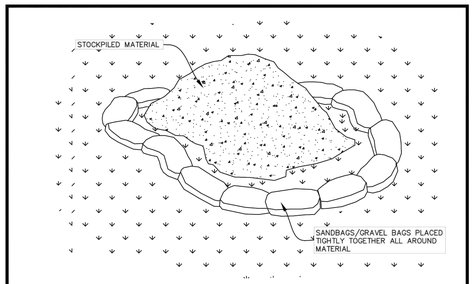

NOTES:
STOCKPILE MANAGEMENT PROCEDURES AND PRACTICES ARE DESIGNED TO REDUCE OR ELIMINATE AIR AND STORM WATER POLLUTION FROM STOCKPILES OF SOIL, AND PAVING MATERIALS SUCH AS PORTLAND CEMENT CONCRETE (PCC) RUBBLE, ASPHALT CONCRETE (AC), ASPHALT CONCRETE RUBBLE, AGGREGATE BASE, AGGREGATE SUBBASE OR PRE-MIXED AGGREGATE, ASPHALT BINDER (i.E. COLD MIX) AND PRESSURE TREATED WOOD.

1. PROTECTION OF STOCKPILES IS A YEAR-ROUND REQUIREMENT.
2. LOCATE STOCKPILES A MINIMUM OF 50 FEET AWAY FROM CONCENTRATED FLOWS OF STORM WATER, DRAINAGE COURSES, AND DRAIN INLETS.
3. IMPLEMENT WIND EROSION/TRANSPORT CONTROL PRACTICES AS APPROPRIATE.
4. ALL STOCKPILES SHALL BE COVERED, STABILIZED, OR PROTECTED WITH A TEMPORARY LINEAR BARRIER (I.E. SANDBAGS, ETC.) PRIOR TO THE ONSET OF PRECIPITATION.

MATERIAL STORAGE

KERN COUNTY PUBLIC WORKS — GROUNDED: BOUNDLESS

NPDES BMP SEDIMENT AND EROSION CONTROL

COUNTY OF KERN
STATE OF CALIFORNIA
DEVELOPMENT STANDARD

REVISIONS DATE	DESC
–	–
–	–
–	–
–	–
–	–

DRAFTED BY: R.R.P.
DESIGNED BY: J.R.C.
DATE DRAFTED: 09/30/23
APPROVED BY: J.R.C.

PLATE NO. BMP-7

DWG FILE: K:\BUILDINGDEV\DEVELOPMENT REVIEW\DEV_STD\2023\2023 REVISED DRAWINGS\BMP\BMP-7

323

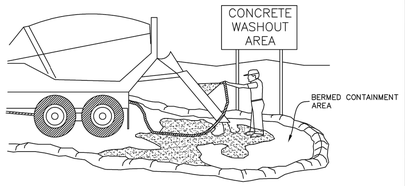

NOTES:

1. EXCESS AND WASTE CONCRETE SHALL NOT BE WASHED INTO THE STREET OR INTO A DRAINAGE SYSTEM.
2. FOR WASHOUT OF CONCRETE AND MORTAR PRODUCTS, A DESIGNATED CONTAINMENT FACILITY OF SUFFICIENT CAPACITY TO RETAIN LIQUID AND SOLID WASTE SHALL BE PROVIDED ON SITE AND DISPOSED OF PROPERLY OFF SITE.
3. SLURRY FROM CONCRETE AND ASPHALT SAW CUTTING SHALL BE VACUUMED OR CONTAINED, DRIED, PICKED UP AND DISPOSED OF PROPERLY.

CONCRETE WASTE MANAGEMENT

KERN COUNTY PUBLIC WORKS — GROUNDED: BOUNDLESS

NPDES BMP SEDIMENT AND EROSION CONTROL

COUNTY OF KERN
STATE OF CALIFORNIA
DEVELOPMENT STANDARD

REVISIONS DATE	DESC
–	–
–	–
–	–
–	–
–	–

DRAFTED BY: R.R.P.
DESIGNED BY: J.R.C.
DATE DRAFTED: 09/30/23
APPROVED BY: J.R.C.

PLATE NO. BMP-8

DWG FILE: K:\BUILDINGDEV\DEVELOPMENT REVIEW\DEV_STD\2023\2023 REVISED DRAWINGS\BMP\BMP-8

324

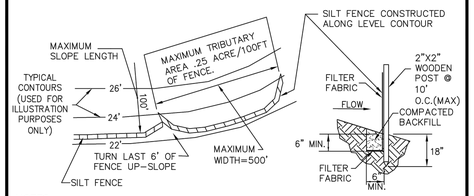

NOTES:

1. CONSTRUCT THE SILT FENCE ALONG A LEVEL CONTOUR.
2. SILT FENCES SHALL REMAIN IN PLACE UNTIL THE DISTURBED AREA IS PERMANENTLY STABILIZED.
3. PROVIDE SUFFICIENT ROOM FOR RUNOFF TO POND BEHIND THE FENCE AND ALLOW SEDIMENT REMOVAL EQUIPMENT TO PASS BETWEEN THE SILT FENCE AND TOE OF SLOPE OR OTHER OBSTRUCTIONS. ABOUT 1200 SQ. FT. OF PONDING AREA SHALL BE PROVIDED FOR EVERY ACRE DRAINING TO THE FENCE.
4. TURN THE ENDS OF THE FILTER FENCE UPHILL TO PREVENT STORMWATER FROM FLOWING AROUND THE FENCE.
5. LEAVE AN UNDISTURBED OR STABILIZED AREA IMMEDIATELY DOWNSLOPE FROM THE FENCE.
6. DO NOT PLACE IN LIVE STREAM OR INTERMITTENTLY FLOWING CHANNELS.
7. WHEN STANDARD FILTER FABRIC IS USED, A WIRE MESH SUPPORT FENCE SHALL BE FASTENED SECURELY TO THE UPSLOPE SIDE OF THE POSTS USING HEAVY-DUTY (0.6 INCH) WIRE STAPLES AT LEAST 1.75 INCHES LONG, TIE WIRES OR HOG RINGS.
8. FILTER FABRIC SHALL BE WOVEN POLYPROPYLENE GEOTEXTILE WITH A MINIMUM WIDTH OF 36 INCHES AND A MINIMUM TENSILE STRENGTH OF 100 LB FORCE.
9. WOOD STAKES SHALL BE COMMERCIAL QUALITY LUMBER NO LESS THAN 2 INCH BY 2 INCH. WOOD STAKES SHALL BE DRIVEN TO A DEPTH OF NO LESS THAN 18 INCHES FROM SURFACE.

SILT FENCE

KERN COUNTY PUBLIC WORKS — GROUNDED: BOUNDLESS

NPDES BMP SEDIMENT AND EROSION CONTROL

COUNTY OF KERN
STATE OF CALIFORNIA
DEVELOPMENT STANDARD

REVISIONS DATE	DESC
–	–
–	–
–	–
–	–
–	–

DRAFTED BY: R.R.P.
DESIGNED BY: J.R.C.
DATE DRAFTED: 09/30/23
APPROVED BY: J.R.C.

PLATE NO. BMP-10

DWG FILE: K:\BUILDINGDEV\DEVELOPMENT REVIEW\DEV_STD\2023\2023 REVISED DRAWINGS\BMP\BMP-10

326

REVIEWED FOR CODE COMPLIANCE BY:
WILLDAN ENGINEERING

Approval of these plans & specifications shall not be construed to be a permit for, or an approval of any violation of any Federal, State, County or City laws or ordinances. One set of approved plans must be kept on the job until completion.

12:12:26 PM Jul 20, 2025

811 Know what's below. Call before you dig.

N:\projects\0896\engineering\acad\improvements\0896_03-04_ECP.dwg; Last Saved By: jjenison - Apr 01, 2025 - 3:57pm Last Printed By: JJENISON - May 02, 2025, 4:14pm;

AGENCY

FLEWELLING & MOODY
architecture planning interiors

HEADQUARTERS OFFICE:
99 S. Lake Ave., Suite 300
Pasadena, CA 91101
323.543.8300
E-Mail: fm-pasadena@flewelling-moody.com

ANTELOPE VALLEY OFFICE:
1035 West Lancaster Boulevard
Lancaster, California 93534
661.949.0771
E-Mail: fm-lancaster@flewelling-moody.com

An Employee Owned Corporation

ARCHITECT

CONSULTANT

REGISTERED PROFESSIONAL ENGINEER — JOSLYN D. JENISON — NO 77454 — CIVIL — STATE OF CALIFORNIA

ECG Encompass Consultant Group
2515 AVE STANFORD, SUITE A320, SANTA CLARITA, CA 91355
PHONE: 661.600.9367 WEBSITE: WWW.ECGCIVIL.COM

Drawn by

Checked by

Revisions

No.	Date	Description

All dimensions must be checked at the job by the contractor who accepts full responsibility for their accuracy under the contract. These plans & the specifications in connection therewith have been prepared for a specific site. Any and all responsibility for their use in whole or in part on any other site is hereby disclaimed by Flewelling & Moody.

CITY OF RIDGECREST

SGT. JOHN PINNEY MEMORIAL POOL REPLACEMENT

205 S WARNER ST.
RIDGECREST, CA 93555

EROSION CONTROL DETAILS

Job No. 3055-0100

Date 05/02/2025

C2.02

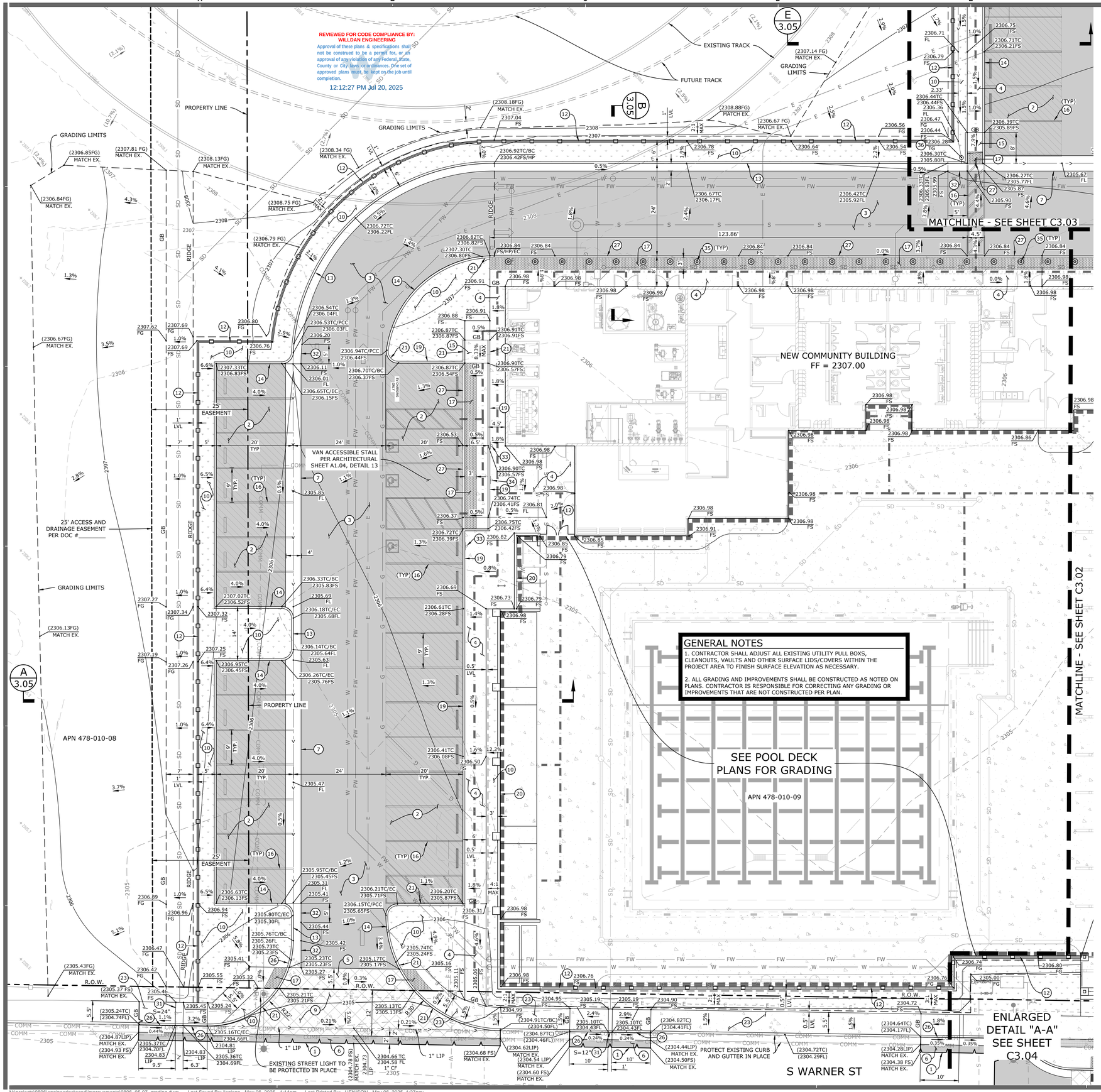

GRADING AND DRAINAGE CONSTRUCTION NOTES

1. SAWCUT PCC OR AC PAVEMENT TO LIMITS SHOWN.
2. CONSTRUCT PARKING STALL ASPHALT CONCRETE PAVEMENT PER DETAIL "A" ON SHEET C3.06.
3. CONSTRUCT DRIVE AISLE ASPHALT CONCRETE PAVEMENT PER DETAIL "B" ON SHEET C3.06.
4. CONSTRUCT PCC PEDESTRIAN PAVEMENT PER DETAIL "C" ON SHEET C3.06.
5. CONSTRUCT PCC VEHICULAR PAVEMENT PER DETAIL "D" ON SHEET C3.06.
6. CONSTRUCT AC AND BASE TO MATCH EXISTING STREET SECTION THICKNESSES.
7. CONSTRUCT 4' WIDE CONCRETE RIBBON GUTTER PER DETAIL "I" ON SHEET C3.06.
8. CONSTRUCT 0" CONCRETE HEADER PER LANDSCAPE ARCHITECT'S PLAN.
9. CONSTRUCT CONCRETE DRIVEWAY MODIFIED PER SPPWC STD PLAN 110-2, TYPE C ON SHEET C3.07.
10. CONSTRUCT LANDSCAPING PER LANDSCAPE ARCHITECT'S PLAN.
11. CONSTRUCT 10'x10' GROUTED RIP RAP PAD PER DETAIL "J" ON SHEET C3.06.
12. CONSTRUCT FENCE/GATE PER ARCHITECT'S PLAN.
13. CONSTRUCT 6" CURB AND 24" GUTTER PER CITY OF RIDGECREST STD PLATE ST-7, TYPE B ON SHEET C3.07.
14. CONSTRUCT 6" CURB PER SPPWC STD PLAN 120-3, TYPE A1-6(150) ON SHEET C3.07.
15. CONSTRUCT ADA RAMP, WALLS/CURBS AND HANDRAILS PER ARCHITECTURAL PLAN.
16. CONSTRUCT STRIPING PER ARCHITECTURAL PLANS.
17. CONSTRUCT TRUNCATED DOMES PER ARCHITECTURAL PLAN.
18. CONSTRUCT FENCE ON TOP OF WALL PER ARCHITECTURAL PLAN.
19. CONSTRUCT 4" CURB SPPWC STD PLAN 120-3, TYPE A1-6(150) ON SHEET C3.07 AND MODIFIED PER PLAN.
20. CONSTRUCT SCREEN WALL PER ARCHITECT'S PLANS.
21. CONSTRUCT VARIABLE HEIGHT CURB PER PLAN.
22. CONSTRUCT CONCRETE FLUME WITH GRATED COVER PER DETAIL "H" ON SHEET C3.06.
23. CONSTRUCT PCC PEDESTRIAN WALKWAY PER CITY OF RIDGECREST STD PLATE ST-8, TYPE II ON SHEET C3.07.
24. CONSTRUCT SOD TURF PER LANDSCAPE ARCHITECT'S PLAN.
25. CONSTRUCT STAIRS PER ARCHITECT'S PLAN.
26. CONSTRUCT VARIABLE HEIGHT CURB AND 24" GUTTER MODIFIED PER CITY OF RIDGECREST STD. PLATE ST-7, TYPE B ON SHEET C3.07.
27. CONSTRUCT 0" CURB AND MODIFIED PER SPPWC STD. PLAN 120-3, TYPE A1-6(150) ON SHEET C3.07.
28. CONSTRUCT TRASH ENCLOSURE PER ARCHITECT'S PLAN.
29. CONSTRUCT SEAT WALL PER LANDSCAPE ARCHITECT'S PLAN.
30. CONSTRUCT RETAINING CURB PER ARCHITECT'S PLAN.
31. CONSTRUCT PARKWAY DRAIN PER SPPWC STD. PLAN 151-3 ON SHEET C3.07, MODIFIED PER PLAN. INLET TYPE 1. "S" PER PLAN. CONSTRUCT CONNECTION TO ONSITE STORM DRAIN PER WET UTILITY PLAN.
32. CONSTRUCT GUTTER TRANSITION AS SHOWN. SEE PLAN FOR GUTTER LIP ELEVATIONS.
33. CONSTRUCT ACCESSIBLE PARKING SIGN PER ARCHITECTURAL SHEET A1.10, DETAIL 10.
34. CONSTRUCT VAN ACCESSIBLE PARKING SIGN PER ARCHITECTURAL SHEET A1.10, DETAIL 11.
35. CONSTRUCT BOLLARD PER ARCHITECTURAL SITE PLAN SHEET A1.01 AND SHEET A1.10, DETAIL 12.
36. CONSTRUCT 6" DIA. NDS SPEE-D CATCH BASIN WITH ATRIUM GRATE AND OUTLET 3" DIA. PIPE THROUGH CURB FACE AS SHOWN.

LEGEND

- PROPOSED PC CONCRETE - PEDESTRIAN
- PROPOSED PC CONCRETE - VEHICULAR
- PROPOSED ASPHALT CONCRETE - PARKING STALLS
- PROPOSED ASPHALT CONCRETE - DRIVE AISLE
- PROPOSED LANDSCAPING PER LANDSCAPE ARCHITECT'S PLAN
- PROPOSED SOD TURF PER LANDSCAPE ARCHITECT'S PLAN
- PROPOSED SAWCUT
- PROPOSED FENCE
- EXISTING FENCE
- RIGHT OF WAY/PROPERTY LINE
- GRADE BREAK
- 2344 EXISTING MINOR CONTOURS
- 2345 EXISTING MAJOR CONTOURS
- 2344 PROPOSED MINOR CONTOURS
- 2345 PROPOSED MAJOR CONTOURS
- PROPOSED FLOWLINE
- SD PROPOSED STORM DRAIN
- FW PROPOSED FIRE WATER
- W PROPOSED WATER LINE
- S PROPOSED SEWER LINE
- EXISTING STREET CENTERLINE
- STORM DRAIN INLET
- OHW EXISTING OVER HEAD WIRE
- E EXISTING ELECTRICAL LINE
- G EXISTING GAS LINE
- W EXISTING WATER LINE
- SD EXISTING STORM DRAIN LINE
- FW EXISTING FIREWATER LINE
- S EXISTING SEWER LINE
- COMM EXISTING COMMUNICATION LINE
- 2410.00 FS PROPOSED ELEVATION
- (2410.00) EG EXISTING ELEVATION
- 1.5% PROPOSED GRADE
- PATH OF TRAVEL

Know what's below. Call before you dig. 811

AGENCY

FLEWELLING & MOODY
architecture planning interiors

HEADQUARTERS OFFICE:
99 S. Lake Ave., Suite 300
Pasadena, CA 91101
323.543.8300
E-Mail: fm-pasadena@flewelling-moody.com

ANTELOPE VALLEY OFFICE:
1035 West Lancaster Boulevard
Lancaster, California 93534
661.949.0771
E-Mail: fm-lancaster@flewelling-moody.com

An Employee Owned Corporation

ARCHITECT

CONSULTANT

REGISTERED PROFESSIONAL ENGINEER
JOSIAH D. JENISON
NO 77454
CIVIL
STATE OF CALIFORNIA

ECG
Encompass Consultant Group
25115 AVE STANFORD, SUITE A320, SANTA CLARITA, CA 91355
PHONE: 661.609.9367 WEBSITE: WWW.ECGCIVIL.COM

Drawn by

Checked by

Revisions

No.	Date	Description

All dimensions must be checked at the job by the contractor who accepts full responsibility for their accuracy under the contract. These plans & the specifications in connection therewith have been prepared for a specific site. Any and all responsibility for their use in whole or in part on any other site is hereby disclaimed by Flewelling & Moody.

CITY OF RIDGECREST

SGT. JOHN PINNEY MEMORIAL POOL REPLACEMENT

205 S WARNER ST.
RIDGECREST, CA 93555

GRADING AND PAVING PLAN

Job No.
3055-0100

Date
05/02/2025

C3.01

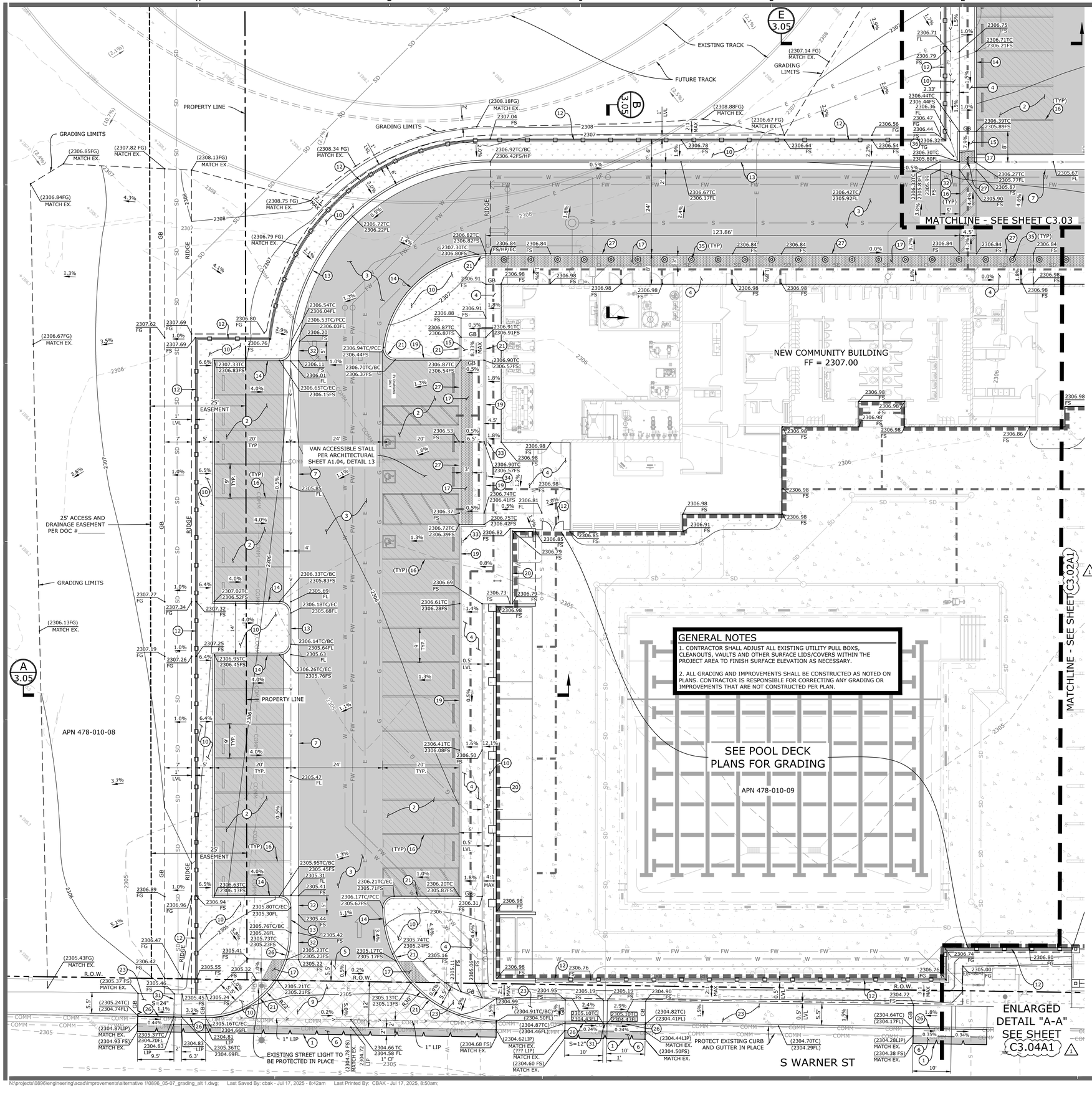

GENERAL NOTES

1. CONTRACTOR SHALL ADJUST ALL EXISTING UTILITY PULL BOXS, CLEANOUTS, VAULTS AND OTHER SURFACE LIDS/COVERS WITHIN THE PROJECT AREA TO FINISH SURFACE ELEVATION AS NECESSARY.

2. ALL GRADING AND IMPROVEMENTS SHALL BE CONSTRUCTED AS NOTED ON PLANS. CONTRACTOR IS RESPONSIBLE FOR CORRECTING ANY GRADING OR IMPROVEMENTS THAT ARE NOT CONSTRUCTED PER PLAN.

GRADING AND DRAINAGE CONSTRUCTION NOTES

1. SAWCUT PCC OR AC PAVEMENT TO LIMITS SHOWN.
2. CONSTRUCT PARKING STALL ASPHALT CONCRETE PAVEMENT PER DETAIL "A" ON SHEET C3.06.
3. CONSTRUCT DRIVE AISLE ASPHALT CONCRETE PAVEMENT PER DETAIL "B" ON SHEET C3.06.
4. CONSTRUCT PCC PEDESTRIAN PAVEMENT PER DETAIL "C" ON SHEET C3.06.
5. CONSTRUCT PCC VEHICULAR PAVEMENT PER DETAIL "D" ON SHEET C3.06.
6. CONSTRUCT AC AND BASE TO MATCH EXISTING STREET SECTION THICKNESSES.
7. CONSTRUCT 4' WIDE CONCRETE RIBBON GUTTER PER DETAIL "I" ON SHEET C3.06.
8. CONSTRUCT 0" CONCRETE HEADER PER LANDSCAPE ARCHITECT'S PLAN.
9. CONSTRUCT CONCRETE DRIVEWAY MODIFIED PER SPPWC STD PLAN 110-2, TYPE C ON SHEET C3.07.
10. CONSTRUCT LANDSCAPING PER LANDSCAPE ARCHITECT'S PLAN.
11. CONSTRUCT 10'x10' GROUTED RIP RAP PAD PER DETAIL "J" ON SHEET C3.06.
12. CONSTRUCT FENCE/GATE PER ARCHITECT'S PLAN.
13. CONSTRUCT 6" CURB AND 24" GUTTER PER CITY OF RIDGECREST STD PLATE ST-7, TYPE B ON SHEET C3.07.
14. CONSTRUCT 6" CURB PER SPPWC STD PLAN 120-3, TYPE A1-6(150) ON SHEET C3.07.
15. CONSTRUCT ADA RAMP, WALLS/CURBS AND HANDRAILS PER ARCHITECTURAL PLAN.
16. CONSTRUCT STRIPING PER ARCHITECTURAL PLANS.
17. CONSTRUCT TRUNCATED DOMES PER ARCHITECTURAL PLAN.
18. CONSTRUCT FENCE ON TOP OF WALL PER ARCHITECTURAL PLAN.
19. CONSTRUCT 4" CURB SPPWC STD PLAN 120-3, TYPE A1-6(150) ON SHEET C3.07 AND MODIFIED PER PLAN.
20. CONSTRUCT SCREEN WALL PER ARCHITECT'S PLANS.
21. CONSTRUCT VARIABLE HEIGHT CURB PER PLAN.
22. CONSTRUCT CONCRETE FLUME WITH GRATED COVER PER DETAIL "H" ON SHEET C3.06.
23. CONSTRUCT PCC PEDESTRIAN WALKWAY PER CITY OF RIDGECREST STD PLATE ST-8, TYPE II ON SHEET C3.07.
24. CONSTRUCT SOD TURF PER LANDSCAPE ARCHITECT'S PLAN.
25. CONSTRUCT STAIRS PER ARCHITECT'S PLAN.
26. CONSTRUCT VARIABLE HEIGHT CURB AND 24" GUTTER MODIFIED PER CITY OF RIDGECREST STD. PLATE ST-7, TYPE B ON SHEET C3.07.
27. CONSTRUCT 0" CURB AND MODIFIED PER SPPWC STD. PLAN 120-3, TYPE A1-6(150) ON SHEET C3.07.
28. CONSTRUCT TRASH ENCLOSURE PER ARCHITECT'S PLAN.
29. CONSTRUCT SEAT WALL PER LANDSCAPE ARCHITECT'S PLAN.
30. CONSTRUCT RETAINING CURB PER ARCHITECT'S PLAN.
31. CONSTRUCT PARKWAY DRAIN PER SPPWC STD. PLAN 151-3 ON SHEET C3.07, MODIFIED PER PLAN. INLET TYPE 1. "S" PER PLAN. CONSTRUCT CONNECTION TO ONSITE STORM DRAIN PER WET UTILITY PLAN.
32. CONSTRUCT GUTTER TRANSITION AS SHOWN. SEE PLAN FOR GUTTER LIP ELEVATIONS.
33. CONSTRUCT ACCESSIBLE PARKING SIGN PER ARCHITECTURAL SHEET A1.10, DETAIL 10.
34. CONSTRUCT VAN ACCESSIBLE PARKING SIGN PER ARCHITECTURAL SHEET A1.10, DETAIL 11.
35. CONSTRUCT BOLLARD PER ARCHITECTURAL SITE PLAN SHEET A1.01 AND SHEET A1.10, DETAIL 12.
36. CONSTRUCT 6" DIA. NDS SPEE-D CATCH BASIN WITH ATRIUM GRATE AND OUTLET 3" DIA. PIPE THROUGH CURB FACE AS SHOWN.

LEGEND

- PROPOSED PC CONCRETE - PEDESTRIAN
- PROPOSED PC CONCRETE - VEHICULAR
- PROPOSED ASPHALT CONCRETE - PARKING STALLS
- PROPOSED ASPHALT CONCRETE - DRIVE AISLE
- PROPOSED LANDSCAPING PER LANDSCAPE ARCHITECT'S PLAN
- PROPOSED SOD TURF PER LANDSCAPE ARCHITECT'S PLAN
- PROPOSED SAWCUT
- PROPOSED FENCE
- EXISTING FENCE
- RIGHT OF WAY/PROPERTY LINE
- GRADE BREAK
- EXISTING MINOR CONTOURS
- EXISTING MAJOR CONTOURS
- PROPOSED MINOR CONTOURS
- PROPOSED MAJOR CONTOURS
- PROPOSED FLOWLINE
- PROPOSED STORM DRAIN
- PROPOSED FIRE WATER
- PROPOSED WATER LINE
- PROPOSED SEWER LINE
- EXISTING STREET CENTERLINE
- STORM DRAIN INLET
- EXISTING OVER HEAD WIRE
- EXISTING ELECTRICAL LINE
- EXISTING GAS LINE
- EXISTING WATER LINE
- EXISTING STORM DRAIN LINE
- EXISTING FIREWATER LINE
- EXISTING SEWER LINE
- EXISTING COMMUNICATION LINE
- PROPOSED ELEVATION
- EXISTING ELEVATION
- PROPOSED GRADE
- PATH OF TRAVEL

SCALE: 1"=10'
0 10 20 30

Know what's below. Call before you dig.

AGENCY

FLEWELLING & MOODY
architecture planning interiors

HEADQUARTERS OFFICE:
99 S. Lake Ave., Suite 300
Pasadena, CA 91101
323.543.8300
E-Mail: fm-pasadena@flewelling-moody.com

ANTELOPE VALLEY OFFICE:
1035 West Lancaster Boulevard
Lancaster, California 93534
661.949.0771
E-Mail: fm-lancaster@flewelling-moody.com

An Employee Owned Corporation

ARCHITECT

CONSULTANT

REGISTERED PROFESSIONAL ENGINEER
JOSIAH D. JENSEN
NO 77454
CIVIL
STATE OF CALIFORNIA

ECG
Encompass Consultant Group
25115 AVE STANFORD, SUITE A320, SANTA CLARITA, CA 91355
PHONE: 661.609.9367 WEBSITE: WWW.ECGCIVIL.COM

Drawn by

Checked by

Revisions

No.	Date	Description
1	08/27/2025	BID ALTERNATIVE

All dimensions must be checked at the job by the contractor who accepts full responsibility for their accuracy under the contract. These plans & the specifications in connection therewith have been prepared for a specific site. Any and all responsibility for their use in whole or in part on any other site is hereby disclaimed by Flewelling & Moody.

CITY OF RIDGECREST

SGT. JOHN PINNEY MEMORIAL
POOL REPLACEMENT

205 S WARNER ST.
RIDGECREST, CA 93555

GRADING AND PAVING PLAN

Job No.
3055-0100

Date
06/25/2025

C3.01A1

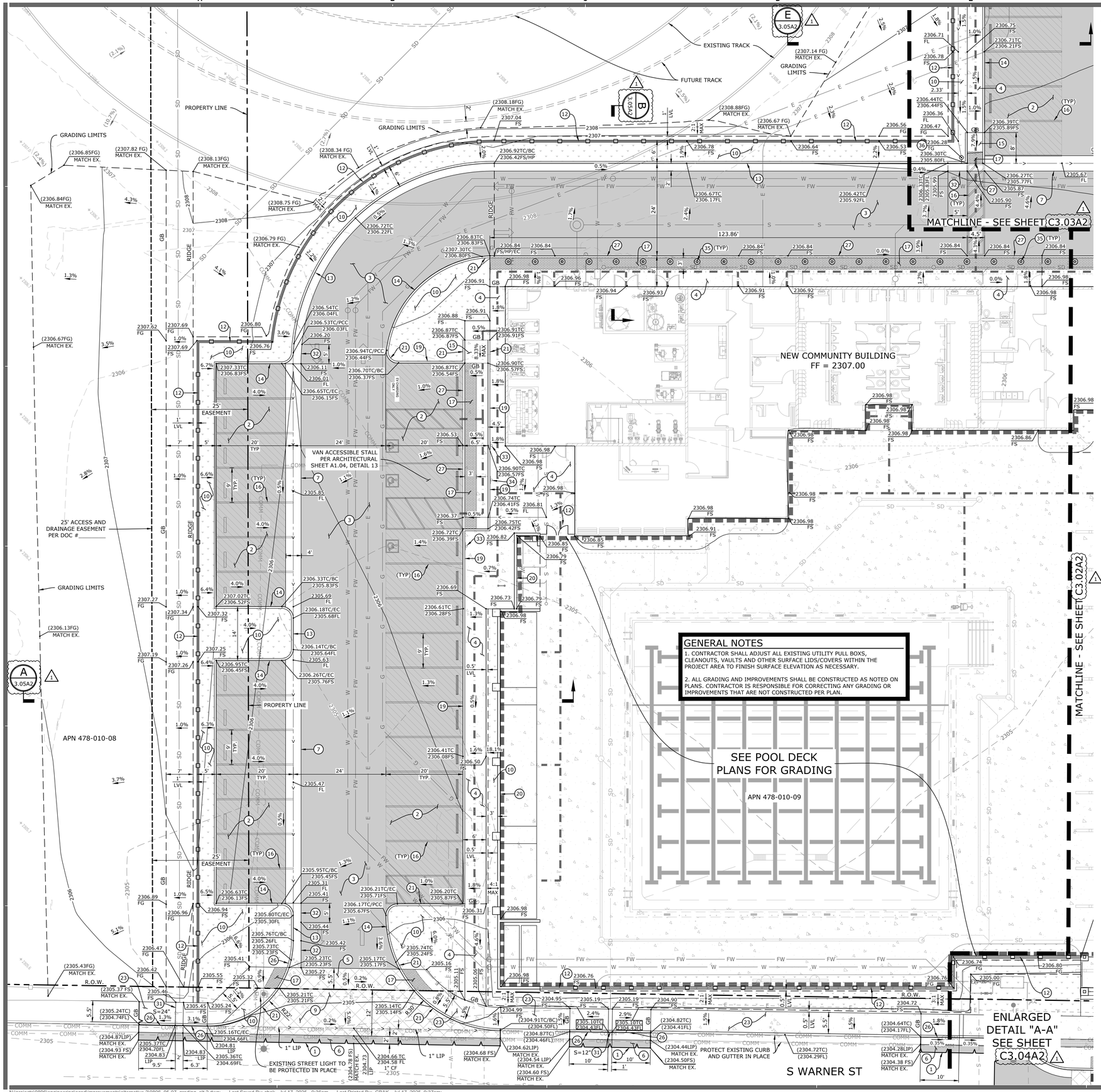

GRADING AND DRAINAGE CONSTRUCTION NOTES

1. SAWCUT PCC OR AC PAVEMENT TO LIMITS SHOWN.
2. CONSTRUCT PARKING STALL ASPHALT CONCRETE PAVEMENT PER DETAIL "A" ON SHEET C3.06.
3. CONSTRUCT DRIVE AISLE ASPHALT CONCRETE PAVEMENT PER DETAIL "B" ON SHEET C3.06.
4. CONSTRUCT PCC PEDESTRIAN PAVEMENT PER DETAIL "C" ON SHEET C3.06.
5. CONSTRUCT PCC VEHICULAR PAVEMENT PER DETAIL "D" ON SHEET C3.06.
6. CONSTRUCT AC AND BASE TO MATCH EXISTING STREET SECTION THICKNESSES.
7. CONSTRUCT 4' WIDE CONCRETE RIBBON GUTTER PER DETAIL "I" ON SHEET C3.06.
8. CONSTRUCT 0" CONCRETE HEADER PER LANDSCAPE ARCHITECT'S PLAN.
9. CONSTRUCT CONCRETE DRIVEWAY MODIFIED PER SPPWC STD PLAN 110-2, TYPE C ON SHEET C3.07.
10. CONSTRUCT LANDSCAPING PER LANDSCAPE ARCHITECT'S PLAN.
11. CONSTRUCT 10'x10' GROUTED RIP RAP PAD PER DETAIL "J" ON SHEET C3.06.
12. CONSTRUCT FENCE/GATE PER ARCHITECT'S PLAN.
13. CONSTRUCT 6" CURB AND 24" GUTTER PER CITY OF RIDGECREST STD PLATE ST-7, TYPE B ON SHEET C3.07.
14. CONSTRUCT 6" CURB PER SPPWC STD PLAN 120-3, TYPE A1-6(150) ON SHEET C3.07.
15. CONSTRUCT ADA RAMP, WALLS/CURBS AND HANDRAILS PER ARCHITECTURAL PLAN.
16. CONSTRUCT STRIPING PER ARCHITECTURAL PLANS.
17. CONSTRUCT TRUNCATED DOMES PER ARCHITECTURAL PLAN.
18. CONSTRUCT FENCE ON TOP OF WALL PER ARCHITECTURAL PLAN.
19. CONSTRUCT 4" CURB SPPWC STD PLAN 120-3, TYPE A1-6(150) ON SHEET C3.07 AND MODIFIED PER PLAN.
20. CONSTRUCT SCREEN WALL PER ARCHITECT'S PLANS.
21. CONSTRUCT VARIABLE HEIGHT CURB PER PLAN.
22. CONSTRUCT CONCRETE FLUME WITH GRATED COVER PER DETAIL "H" ON SHEET C3.06.
23. CONSTRUCT PCC PEDESTRIAN WALKWAY PER CITY OF RIDGECREST STD PLATE ST-8, TYPE II ON SHEET C3.07.
24. CONSTRUCT SOD TURF PER LANDSCAPE ARCHITECT'S PLAN.
25. CONSTRUCT STAIRS PER ARCHITECT'S PLAN.
26. CONSTRUCT VARIABLE HEIGHT CURB AND 24" GUTTER MODIFIED PER CITY OF RIDGECREST STD. PLATE ST-7, TYPE B ON SHEET C3.07.
27. CONSTRUCT 0" CURB AND MODIFIED PER SPPWC STD. PLAN 120-3, TYPE A1-6(150) ON SHEET C3.07.
28. CONSTRUCT TRASH ENCLOSURE PER ARCHITECT'S PLAN.
29. CONSTRUCT SEAT WALL PER LANDSCAPE ARCHITECT'S PLAN.
30. CONSTRUCT RETAINING CURB PER ARCHITECT'S PLAN.
31. CONSTRUCT PARKWAY DRAIN PER SPPWC STD. PLAN 151-3 ON SHEET C3.07, MODIFIED PER PLAN. INLET TYPE 1. "S" PER PLAN. CONSTRUCT CONNECTION TO ONSITE STORM DRAIN PER WET UTILITY PLAN.
32. CONSTRUCT GUTTER TRANSITION AS SHOWN. SEE PLAN FOR GUTTER LIP ELEVATIONS.
33. CONSTRUCT ACCESSIBLE PARKING SIGN PER ARCHITECTURAL SHEET A1.10, DETAIL 10.
34. CONSTRUCT VAN ACCESSIBLE PARKING SIGN PER ARCHITECTURAL SHEET A1.10, DETAIL 11.
35. CONSTRUCT BOLLARD PER ARCHITECTURAL SITE PLAN SHEET A1.01 AND SHEET A1.10, DETAIL 12.
36. CONSTRUCT 6" DIA. NDS SPEE-D CATCH BASIN WITH ATRIUM GRATE AND OUTLET 3" DIA. PIPE THROUGH CURB FACE AS SHOWN.

LEGEND

- PROPOSED PC CONCRETE - PEDESTRIAN
- PROPOSED PC CONCRETE - VEHICULAR
- PROPOSED ASPHALT CONCRETE - PARKING STALLS
- PROPOSED ASPHALT CONCRETE - DRIVE AISLE
- PROPOSED LANDSCAPING PER LANDSCAPE ARCHITECT'S PLAN
- PROPOSED SOD TURF PER LANDSCAPE ARCHITECT'S PLAN
- PROPOSED SAWCUT
- PROPOSED FENCE
- EXISTING FENCE
- RIGHT OF WAY/PROPERTY LINE
- GRADE BREAK
- EXISTING MINOR CONTOURS
- EXISTING MAJOR CONTOURS
- PROPOSED MINOR CONTOURS
- PROPOSED MAJOR CONTOURS
- PROPOSED FLOWLINE
- PROPOSED STORM DRAIN
- PROPOSED FIRE WATER
- PROPOSED WATER LINE
- PROPOSED SEWER LINE
- EXISTING STREET CENTERLINE
- STORM DRAIN INLET
- EXISTING OVER HEAD WIRE
- EXISTING ELECTRICAL LINE
- EXISTING GAS LINE
- EXISTING WATER LINE
- EXISTING STORM DRAIN LINE
- EXISTING FIREWATER LINE
- EXISTING SEWER LINE
- EXISTING COMMUNICATION LINE
- PROPOSED ELEVATION
- EXISTING ELEVATION
- PROPOSED GRADE
- PATH OF TRAVEL

SCALE: 1"=10'
0 10 20 30

811 Know what's below. Call before you dig.

AGENCY

FLEWELLING & MOODY
architecture planning interiors

HEADQUARTERS OFFICE:
99 S. Lake Ave., Suite 300
Pasadena, CA 91101
323.543.8300
E-Mail: fm-pasadena@flewelling-moody.com

ANTELOPE VALLEY OFFICE:
1035 West Lancaster Boulevard
Lancaster, California 93534
661.949.0771
E-Mail: fm-lancaster@flewelling-moody.com

An Employee Owned Corporation

ARCHITECT

CONSULTANT

REGISTERED PROFESSIONAL ENGINEER JOSIAH D. JENSEN NO 77454 CIVIL STATE OF CALIFORNIA

ECG Encompass Consultant Group
25115 AVE STANFORD, SUITE A320, SANTA CLARITA, CA 91355
PHONE: 661.609.9367 WEBSITE: WWW.ECGCIVIL.COM

Drawn by

Checked by

Revisions

No.	Date	Description
1	08/27/2025	BID ALTERNATIVE

All dimensions must be checked at the job by the contractor who accepts full responsibility for their accuracy under the contract. These plans & the specifications in connection therewith have been prepared for a specific site. Any and all responsibility for their use in whole or in part on any other site is hereby disclaimed by Flewelling & Moody.

CITY OF RIDGECREST

SGT. JOHN PINNEY MEMORIAL POOL REPLACEMENT

205 S WARNER ST.
RIDGECREST, CA 93555

GRADING AND PAVING PLAN

Job No. 3055-0100

Date 06/25/2025

Sheet C3.01A2

GRADING AND DRAINAGE CONSTRUCTION NOTES

1. SAWCUT PCC OR AC PAVEMENT TO LIMITS SHOWN.
2. CONSTRUCT PARKING STALL ASPHALT CONCRETE PAVEMENT PER DETAIL "A" ON SHEET C3.06.
3. CONSTRUCT DRIVE AISLE ASPHALT CONCRETE PAVEMENT PER DETAIL "B" ON SHEET C3.06.
4. CONSTRUCT PCC PEDESTRIAN PAVEMENT PER DETAIL "C" ON SHEET C3.06.
5. CONSTRUCT PCC VEHICULAR PAVEMENT PER DETAIL "D" ON SHEET C3.06.
6. CONSTRUCT AC AND BASE TO MATCH EXISTING STREET SECTION THICKNESSES.
7. CONSTRUCT 4' WIDE CONCRETE RIBBON GUTTER PER DETAIL "I" ON SHEET C3.06.
8. CONSTRUCT 0" CONCRETE HEADER PER LANDSCAPE ARCHITECT'S PLAN.
9. CONSTRUCT CONCRETE DRIVEWAY MODIFIED PER SPPWC STD PLAN 110-2, TYPE C ON SHEET C3.07.
10. CONSTRUCT LANDSCAPING PER LANDSCAPE ARCHITECT'S PLAN.
11. CONSTRUCT 10'x10' GROUTED RIP RAP PAD PER DETAIL "J" ON SHEET C3.06.
12. CONSTRUCT FENCE/GATE PER ARCHITECT'S PLAN.
13. CONSTRUCT 6" CURB AND 24' GUTTER PER CITY OF RIDGECREST STD PLATE ST-7, TYPE B ON SHEET C3.07.
14. CONSTRUCT 6" CURB PER SPPWC STD PLAN 120-3, TYPE A1-6(150) ON SHEET C3.07.
15. CONSTRUCT ADA RAMP, WALLS/CURBS AND HANDRAILS PER ARCHITECTURAL PLAN.
16. CONSTRUCT STRIPING PER ARCHITECTURAL PLANS.
17. CONSTRUCT TRUNCATED DOMES PER ARCHITECTURAL PLAN.
18. CONSTRUCT FENCE ON TOP OF WALL PER ARCHITECTURAL PLAN.
19. CONSTRUCT 4" CURB SPPWC STD PLAN 120-3, TYPE A1-6(150) ON SHEET C3.07 AND MODIFIED PER PLAN.
20. CONSTRUCT SCREEN WALL PER ARCHITECT'S PLANS.
21. CONSTRUCT VARIABLE HEIGHT CURB PER PLAN.
22. CONSTRUCT CONCRETE FLUME WITH GRATED COVER PER DETAIL "H" ON SHEET C3.06.
23. CONSTRUCT PCC PEDESTRIAN WALKWAY PER CITY OF RIDGECREST STD PLATE ST-8, TYPE II ON SHEET C3.07.
24. CONSTRUCT SOD TURF PER LANDSCAPE ARCHITECT'S PLAN.
25. CONSTRUCT STAIRS PER ARCHITECT'S PLAN.
26. CONSTRUCT VARIABLE HEIGHT CURB AND 24" GUTTER MODIFIED PER CITY OF RIDGECREST STD. PLATE ST-7, TYPE B ON SHEET C3.07.
27. CONSTRUCT 0" CURB AND MODIFIED PER SPPWC STD. PLAN 120-3, TYPE A1-6(150) ON SHEET C3.07.
28. CONSTRUCT TRASH ENCLOSURE PER ARCHITECT'S PLAN.
29. CONSTRUCT SEAT WALL PER LANDSCAPE ARCHITECT'S PLAN.
30. CONSTRUCT RETAINING CURB PER ARCHITECT'S PLAN.
31. CONSTRUCT PARKWAY DRAIN PER SPPWC STD. PLAN 151-3 ON SHEET C3.07, MODIFIED PER PLAN. INLET TYPE 1. "S" PER PLAN. CONSTRUCT CONNECTION TO ONSITE STORM DRAIN PER WET UTILITY PLAN.
32. CONSTRUCT GUTTER TRANSITION AS SHOWN. SEE PLAN FOR GUTTER LIP ELEVATIONS.
33. CONSTRUCT ACCESSIBLE PARKING SIGN PER ARCHITECTURAL SHEET A1.10, DETAIL 10.
34. CONSTRUCT VAN ACCESSIBLE PARKING SIGN PER ARCHITECTURAL SHEET A1.10, DETAIL 11.
35. CONSTRUCT BOLLARD PER ARCHITECTURAL SITE PLAN SHEET A1.01 AND SHEET A1.10, DETAIL 12.
36. CONSTRUCT 6" DIA. NDS SPEE-D CATCH BASIN WITH ATRIUM GRATE AND OUTLET 3" DIA. PIPE THROUGH CURB FACE AS SHOWN.

LEGEND

- PROPOSED PC CONCRETE - PEDESTRIAN
- PROPOSED PC CONCRETE - VEHICULAR
- PROPOSED ASPHALT CONCRETE - PARKING STALLS
- PROPOSED ASPHALT CONCRETE - DRIVE AISLE
- PROPOSED LANDSCAPING PER LANDSCAPE ARCHITECT'S PLAN
- PROPOSED SOD TURF PER LANDSCAPE ARCHITECT'S PLAN
- PROPOSED SAWCUT
- PROPOSED FENCE
- EXISTING FENCE
- RIGHT OF WAY/PROPERTY LINE
- GB — GRADE BREAK
- 2344 — EXISTING MINOR CONTOURS
- 2345 — EXISTING MAJOR CONTOURS
- 2344 — PROPOSED MINOR CONTOURS
- 2345 — PROPOSED MAJOR CONTOURS
- PROPOSED FLOWLINE
- SD — PROPOSED STORM DRAIN
- FW — PROPOSED FIRE WATER
- W — PROPOSED WATER LINE
- S — PROPOSED SEWER LINE
- EXISTING STREET CENTERLINE
- STORM DRAIN INLET
- OHW — EXISTING OVER HEAD WIRE
- E — EXISTING ELECTRICAL LINE
- G — EXISTING GAS LINE
- W — EXISTING WATER LINE
- SD — EXISTING STORM DRAIN LINE
- FW — EXISTING FIREWATER LINE
- S — EXISTING SEWER LINE
- COMM — EXISTING COMMUNICATION LINE
- 2410.00 FS — PROPOSED ELEVATION
- (2410.00) EG — EXISTING ELEVATION
- 1.5% — PROPOSED GRADE
- PATH OF TRAVEL

SCALE: 1"=10'
0 10 20 30

811 Know what's below. Call before you dig.

GENERAL NOTES

1. CONTRACTOR SHALL ADJUST ALL EXISTING UTILITY PULL BOXS, CLEANOUTS, VAULTS AND OTHER SURFACE LIDS/COVERS WITHIN THE PROJECT AREA TO FINISH SURFACE ELEVATION AS NECESSARY.

2. ALL GRADING AND IMPROVEMENTS SHALL BE CONSTRUCTED AS NOTED ON PLANS. CONTRACTOR IS RESPONSIBLE FOR CORRECTING ANY GRADING OR IMPROVEMENTS THAT ARE NOT CONSTRUCTED PER PLAN.

FLEWELLING & MOODY
architecture planning interiors

HEADQUARTERS OFFICE:
99 S. Lake Ave., Suite 300
Pasadena, CA 91101
323.543.8300
E-Mail: fm-pasadena@flewelling-moody.com

ANTELOPE VALLEY OFFICE:
1035 West Lancaster Boulevard
Lancaster, California 93534
661.949.0771
E-Mail: fm-lancaster@flewelling-moody.com

An Employee Owned Corporation

ECG Encompass Consultant Group
25115 AVE STANFORD, SUITE A320, SANTA CLARITA, CA 91355
PHONE: 661.609.9367 WEBSITE: WWW.ECGCIVIL.COM

AGENCY

ARCHITECT

CONSULTANT

REGISTERED PROFESSIONAL ENGINEER — JOSIAH D. JENSEN — NO 77454 — CIVIL — STATE OF CALIFORNIA

Drawn by

Checked by

Revisions

No.	Date	Description
1	08/27/2025	BID ALTERNATIVE

All dimensions must be checked at the job by the contractor who accepts full responsibility for their accuracy under the contract. These plans & the specifications in connection therewith have been prepared for a specific site. Any and all responsibility for their use in whole or in part on any other site is hereby disclaimed by Flewelling & Moody.

CITY OF RIDGECREST

SGT. JOHN PINNEY MEMORIAL POOL REPLACEMENT

205 S WARNER ST.
RIDGECREST, CA 93555

GRADING AND PAVING PLAN ALT 4

Job No. 3055-0100

Date 06/25/2025

C3.01A4

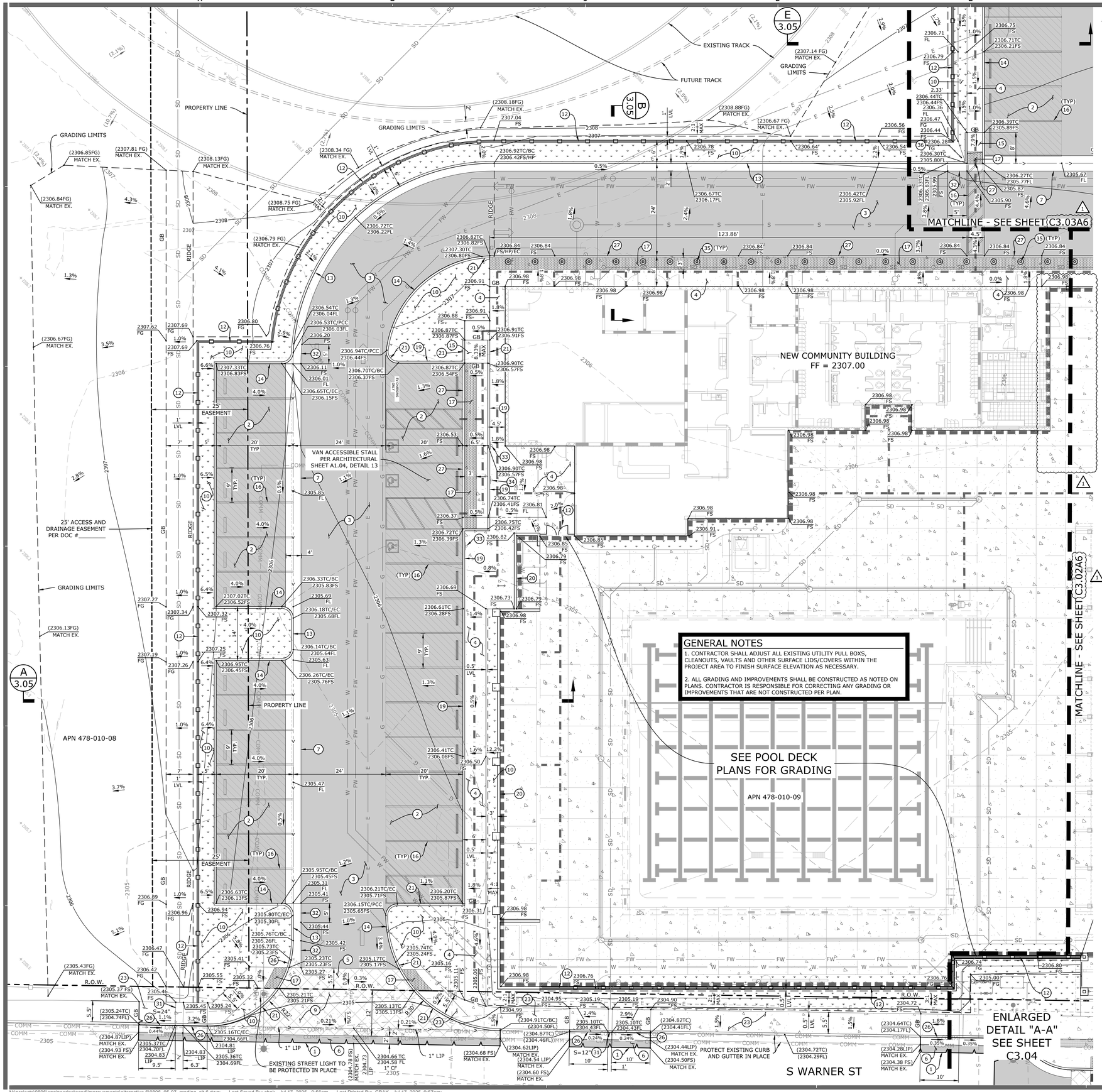

GRADING AND DRAINAGE CONSTRUCTION NOTES

1. SAWCUT PCC OR AC PAVEMENT TO LIMITS SHOWN.
2. CONSTRUCT PARKING STALL ASPHALT CONCRETE PAVEMENT PER DETAIL "A" ON SHEET C3.06.
3. CONSTRUCT DRIVE AISLE ASPHALT CONCRETE PAVEMENT PER DETAIL "B" ON SHEET C3.06.
4. CONSTRUCT PCC PEDESTRIAN PAVEMENT PER DETAIL "C" ON SHEET C3.06.
5. CONSTRUCT PCC VEHICULAR PAVEMENT PER DETAIL "D" ON SHEET C3.06.
6. CONSTRUCT AC AND BASE TO MATCH EXISTING STREET SECTION THICKNESSES.
7. CONSTRUCT 4' WIDE CONCRETE RIBBON GUTTER PER DETAIL "I" ON SHEET C3.06.
8. CONSTRUCT 0" CONCRETE HEADER PER LANDSCAPE ARCHITECT'S PLAN.
9. CONSTRUCT CONCRETE DRIVEWAY MODIFIED PER SPPWC STD PLAN 110-2, TYPE C ON SHEET C3.07.
10. CONSTRUCT LANDSCAPING PER LANDSCAPE ARCHITECT'S PLAN.
11. CONSTRUCT 10'x10' GROUTED RIP RAP PAD PER DETAIL "J" ON SHEET C3.06.
12. CONSTRUCT FENCE/GATE PER ARCHITECT'S PLAN.
13. CONSTRUCT 6" CURB AND 24" GUTTER PER CITY OF RIDGECREST STD PLATE ST-7, TYPE B ON SHEET C3.07.
14. CONSTRUCT 6" CURB PER SPPWC STD PLAN 120-3, TYPE A1-6(150) ON SHEET C3.07.
15. CONSTRUCT ADA RAMP, WALLS/CURBS AND HANDRAILS PER ARCHITECTURAL PLAN.
16. CONSTRUCT STRIPING PER ARCHITECTURAL PLANS.
17. CONSTRUCT TRUNCATED DOMES PER ARCHITECTURAL PLAN.
18. CONSTRUCT FENCE ON TOP OF WALL PER ARCHITECTURAL PLAN.
19. CONSTRUCT 4" CURB SPPWC STD PLAN 120-3, TYPE A1-6(150) ON SHEET C3.07 AND MODIFIED PER PLAN.
20. CONSTRUCT SCREEN WALL PER ARCHITECT'S PLANS.
21. CONSTRUCT VARIABLE HEIGHT CURB PER PLAN.
22. CONSTRUCT CONCRETE FLUME WITH GRATED COVER PER DETAIL "H" ON SHEET C3.06.
23. CONSTRUCT PCC PEDESTRIAN WALKWAY PER CITY OF RIDGECREST STD PLATE ST-8, TYPE II ON SHEET C3.07.
24. CONSTRUCT SOD TURF PER LANDSCAPE ARCHITECT'S PLAN.
25. CONSTRUCT STAIRS PER ARCHITECT'S PLAN.
26. CONSTRUCT VARIABLE HEIGHT CURB AND 24" GUTTER MODIFIED PER CITY OF RIDGECREST STD. PLATE ST-7, TYPE B ON SHEET C3.07.
27. CONSTRUCT 0" CURB AND MODIFIED PER SPPWC STD. PLAN 120-3, TYPE A1-6(150) ON SHEET C3.07.
28. CONSTRUCT TRASH ENCLOSURE PER ARCHITECT'S PLAN.
29. CONSTRUCT SEAT WALL PER LANDSCAPE ARCHITECT'S PLAN.
30. CONSTRUCT RETAINING CURB PER ARCHITECT'S PLAN.
31. CONSTRUCT PARKWAY DRAIN PER SPPWC STD. PLAN 151-3 ON SHEET C3.07, MODIFIED PER PLAN. INLET TYPE 1. "S" PER PLAN. CONSTRUCT CONNECTION TO ONSITE STORM DRAIN PER WET UTILITY PLAN.
32. CONSTRUCT GUTTER TRANSITION AS SHOWN. SEE PLAN FOR GUTTER LIP ELEVATIONS.
33. CONSTRUCT ACCESSIBLE PARKING SIGN PER ARCHITECTURAL SHEET A1.10, DETAIL 10.
34. CONSTRUCT VAN ACCESSIBLE PARKING SIGN PER ARCHITECTURAL SHEET A1.10, DETAIL 11.
35. CONSTRUCT BOLLARD PER ARCHITECTURAL SITE PLAN SHEET A1.01 AND SHEET A1.10, DETAIL 12.
36. CONSTRUCT 6" DIA. NDS SPEE-D CATCH BASIN WITH ATRIUM GRATE AND OUTLET 3" DIA. PIPE THROUGH CURB FACE AS SHOWN.

LEGEND

- PROPOSED PC CONCRETE - PEDESTRIAN
- PROPOSED PC CONCRETE - VEHICULAR
- PROPOSED ASPHALT CONCRETE - PARKING STALLS
- PROPOSED ASPHALT CONCRETE - DRIVE AISLE
- PROPOSED LANDSCAPING PER LANDSCAPE ARCHITECT'S PLAN
- PROPOSED SOD TURF PER LANDSCAPE ARCHITECT'S PLAN
- PROPOSED SAWCUT
- PROPOSED FENCE
- EXISTING FENCE
- RIGHT OF WAY/PROPERTY LINE
- GRADE BREAK
- EXISTING MINOR CONTOURS
- EXISTING MAJOR CONTOURS
- PROPOSED MINOR CONTOURS
- PROPOSED MAJOR CONTOURS
- PROPOSED FLOWLINE
- PROPOSED STORM DRAIN
- PROPOSED FIRE WATER
- PROPOSED WATER LINE
- PROPOSED SEWER LINE
- EXISTING STREET CENTERLINE
- STORM DRAIN INLET
- EXISTING OVER HEAD WIRE
- EXISTING ELECTRICAL LINE
- EXISTING GAS LINE
- EXISTING WATER LINE
- EXISTING STORM DRAIN LINE
- EXISTING FIREWATER LINE
- EXISTING SEWER LINE
- EXISTING COMMUNICATION LINE
- PROPOSED ELEVATION
- EXISTING ELEVATION
- PROPOSED GRADE
- PATH OF TRAVEL

SCALE: 1"=10'
0 10 20 30

Know what's below. Call before you dig.

AGENCY

FLEWELLING & MOODY
architecture planning interiors

HEADQUARTERS OFFICE:
99 S. Lake Ave., Suite 300
Pasadena, CA 91101
323.543.8300
E-Mail: fm-pasadena@flewelling-moody.com

ANTELOPE VALLEY OFFICE:
1035 West Lancaster Boulevard
Lancaster, California 93534
661.949.0771
E-Mail: fm-lancaster@flewelling-moody.com

An Employee Owned Corporation

ARCHITECT

CONSULTANT

REGISTERED PROFESSIONAL ENGINEER
JOSIAH D. JENSEN
NO 77454
CIVIL
STATE OF CALIFORNIA

ECG
Encompass Consultant Group
25115 AVE STANFORD, SUITE A320, SANTA CLARITA, CA 91355
PHONE: 661.609.9367 WEBSITE: WWW.ECGCIVIL.COM

Drawn by

Checked by

Revisions

No.	Date	Description
1	08/27/2025	BID ALTERNATIVE

All dimensions must be checked at the job by the contractor who accepts full responsibility for their accuracy under the contract. These plans & the specifications in connection therewith have been prepared for a specific site. Any and all responsibility for their use in whole or in part on any other site is hereby disclaimed by Flewelling & Moody.

CITY OF RIDGECREST

SGT. JOHN PINNEY MEMORIAL POOL REPLACEMENT

205 S WARNER ST.
RIDGECREST, CA 93555

GRADING AND PAVING PLAN

Job No.
3055-0100

Date
06/25/2025

C3.01A6

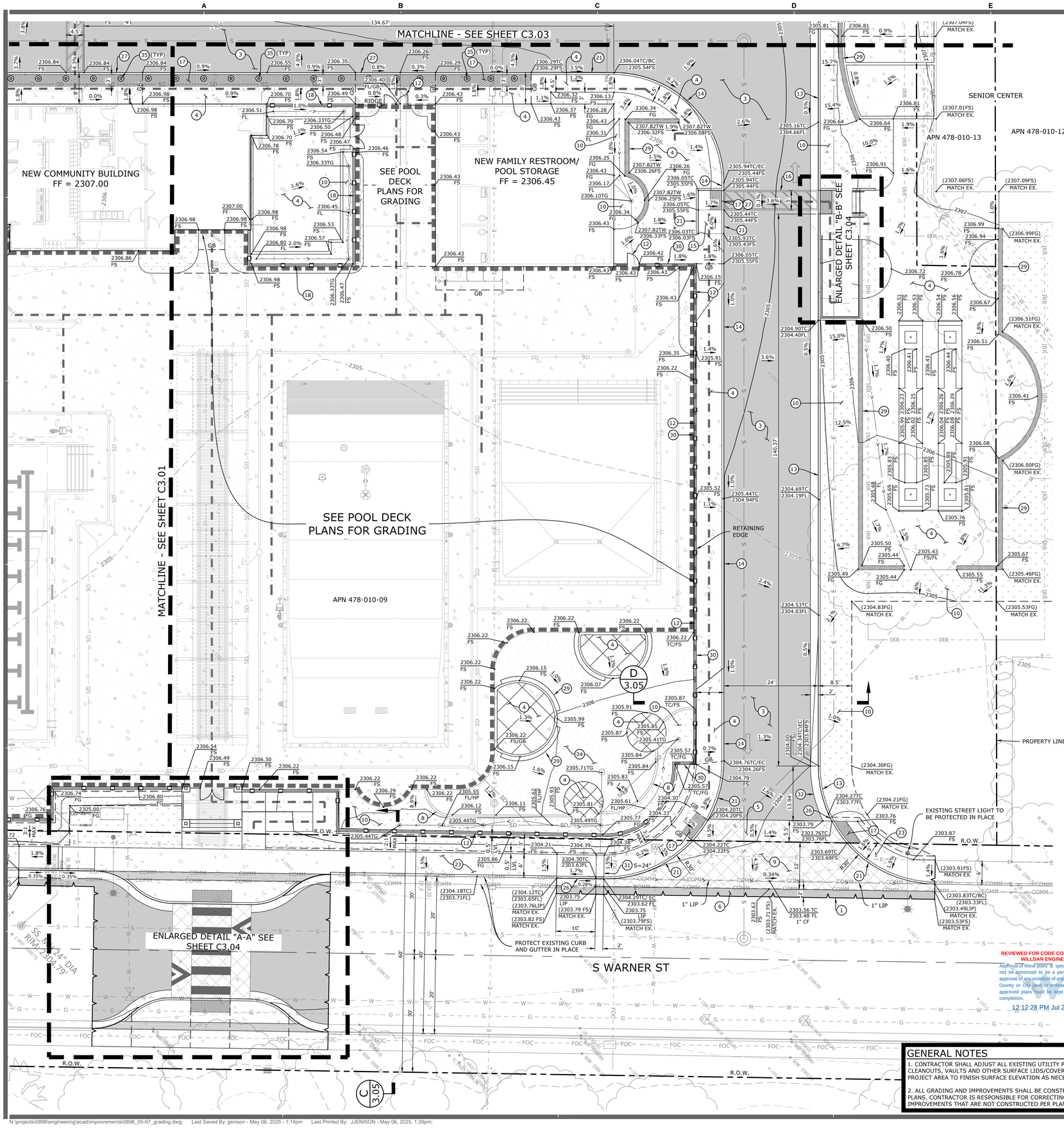

GRADING AND DRAINAGE CONSTRUCTION NOTES

1. SAWCUT PCC OR AC PAVEMENT TO LIMITS SHOWN.
2. CONSTRUCT PARKING STALL ASPHALT CONCRETE PAVEMENT PER DETAIL "A" ON SHEET C3.06.
3. CONSTRUCT DRIVE AISLE ASPHALT CONCRETE PAVEMENT PER DETAIL "B" ON SHEET C3.06.
4. CONSTRUCT PCC PEDESTRIAN PAVEMENT PER DETAIL "C" ON SHEET C3.06.
5. CONSTRUCT PCC VEHICULAR PAVEMENT PER DETAIL "D" ON SHEET C3.06.
6. CONSTRUCT AC AND BASE TO MATCH EXISTING STREET SECTION THICKNESSES.
7. CONSTRUCT 4' WIDE CONCRETE RIBBON GUTTER PER DETAIL "I" ON SHEET C3.06.
8. CONSTRUCT 0" CONCRETE HEADER PER LANDSCAPE ARCHITECT'S PLAN.
9. CONSTRUCT CONCRETE DRIVEWAY MODIFIED PER SPPWC STD PLAN 110-2, TYPE C ON SHEET C3.07.
10. CONSTRUCT LANDSCAPING PER LANDSCAPE ARCHITECT'S PLAN.
11. CONSTRUCT 10'x10' GROUTED RIP RAP PAD PER DETAIL "J" ON SHEET C3.06.
12. CONSTRUCT FENCE/GATE PER ARCHITECT'S PLAN.
13. CONSTRUCT 6" CURB AND 24" GUTTER PER CITY OF RIDGECREST STD PLATE ST-7, TYPE B ON SHEET C3.07.
14. CONSTRUCT 6" CURB PER SPPWC STD PLAN 120-3, TYPE A1-6(150) ON SHEET C3.07.
15. CONSTRUCT ADA RAMP, WALLS/CURBS AND HANDRAILS PER ARCHITECTURAL PLAN.
16. CONSTRUCT STRIPING PER ARCHITECTURAL PLANS.
17. CONSTRUCT TRUNCATED DOMES PER ARCHITECTURAL PLAN.
18. CONSTRUCT FENCE ON TOP OF WALL PER ARCHITECTURAL PLAN.
19. CONSTRUCT 4" CURB SPPWC STD PLAN 120-3, TYPE A1-6(150) ON SHEET C3.07 AND MODIFIED PER PLAN.
20. CONSTRUCT SCREEN WALL PER ARCHITECT'S PLANS.
21. CONSTRUCT VARIABLE HEIGHT CURB PER PLAN.
22. CONSTRUCT CONCRETE FLUME WITH GRATED COVER PER DETAIL "H" ON SHEET C3.06.
23. CONSTRUCT PCC PEDESTRIAN WALKWAY PER CITY OF RIDGECREST STD PLATE ST-8, TYPE II ON SHEET C3.07.
24. CONSTRUCT SOD TURF PER LANDSCAPE ARCHITECT'S PLAN.
25. CONSTRUCT STAIRS PER ARCHITECT'S PLAN.
26. CONSTRUCT VARIABLE HEIGHT CURB AND 24" GUTTER MODIFIED PER CITY OF RIDGECREST STD. PLATE ST-7, TYPE B ON SHEET C3.07.
27. CONSTRUCT 0" CURB AND MODIFIED PER SPPWC STD. PLAN 120-3, TYPE A1-6(150) ON SHEET C3.07.
28. CONSTRUCT TRASH ENCLOSURE PER ARCHITECT'S PLAN.
29. CONSTRUCT SEAT WALL PER LANDSCAPE ARCHITECT'S PLAN.
30. CONSTRUCT RETAINING CURB PER ARCHITECT'S PLAN.
31. CONSTRUCT PARKWAY DRAIN PER SPPWC STD. PLAN 151-3 ON SHEET C3.07, MODIFIED PER PLAN. INLET TYPE 1. "S" PER PLAN. CONSTRUCT CONNECTION TO ONSITE STORM DRAIN PER WET UTILITY PLAN.
32. CONSTRUCT GUTTER TRANSITION AS SHOWN. SEE PLAN FOR GUTTER LIP ELEVATIONS.
33. CONSTRUCT ACCESSIBLE PARKING SIGN PER ARCHITECTURAL SHEET A1.10, DETAIL 10.
34. CONSTRUCT VAN ACCESSIBLE PARKING SIGN PER ARCHITECTURAL SHEET A1.10, DETAIL 11.
35. CONSTRUCT BOLLARD PER ARCHITECTURAL SITE PLAN SHEET A1.01 AND SHEET A1.10, DETAIL 12.
36. CONSTRUCT 6" DIA. NDS SPEE-D CATCH BASIN WITH ATRIUM GRATE AND OUTLET 3" DIA. PIPE THROUGH CURB FACE AS SHOWN.

LEGEND

- PROPOSED PC CONCRETE - PEDESTRIAN
- PROPOSED PC CONCRETE - VEHICULAR
- PROPOSED ASPHALT CONCRETE - PARKING STALLS
- PROPOSED ASPHALT CONCRETE - DRIVE AISLE
- PROPOSED LANDSCAPING PER LANDSCAPE ARCHITECT'S PLAN
- PROPOSED SOD TURF PER LANDSCAPE ARCHITECT'S PLAN
- PROPOSED SAWCUT
- PROPOSED FENCE
- EXISTING FENCE
- RIGHT OF WAY/PROPERTY LINE
- GB — GRADE BREAK
- 2344 — EXISTING MINOR CONTOURS
- 2345 — EXISTING MAJOR CONTOURS
- 2344 — PROPOSED MINOR CONTOURS
- 2345 — PROPOSED MAJOR CONTOURS
- PROPOSED FLOWLINE
- SD — PROPOSED STORM DRAIN
- FW — PROPOSED FIRE WATER
- W — PROPOSED WATER LINE
- S — PROPOSED SEWER LINE
- EXISTING STREET CENTERLINE
- STORM DRAIN INLET
- OHW — EXISTING OVER HEAD WIRE
- E — EXISTING ELECTRICAL LINE
- G — EXISTING GAS LINE
- W — EXISTING WATER LINE
- SD — EXISTING STORM DRAIN LINE
- FW — EXISTING FIREWATER LINE
- S — EXISTING SEWER LINE
- COMM — EXISTING COMMUNICATION LINE
- 2410.00 FS — PROPOSED ELEVATION
- (2410.00) EG — EXISTING ELEVATION
- 1.5% — PROPOSED GRADE
- PATH OF TRAVEL

REVIEWED FOR CODE COMPLIANCE BY: WILLDAN ENGINEERING

Approval of these plans & specifications shall not be construed to be a permit for, or an approval of any violation of any Federal, State, County or City laws, or ordinances. One set of approved plans must be kept on the job until completion.

12:12:28 PM Jul 20, 2025

GENERAL NOTES

1. CONTRACTOR SHALL ADJUST ALL EXISTING UTILITY PULL BOXS, CLEANOUTS, VAULTS AND OTHER SURFACE LIDS/COVERS WITHIN THE PROJECT AREA TO FINISH SURFACE ELEVATION AS NECESSARY.

2. ALL GRADING AND IMPROVEMENTS SHALL BE CONSTRUCTED AS NOTED ON PLANS. CONTRACTOR IS RESPONSIBLE FOR CORRECTING ANY GRADING OR IMPROVEMENTS THAT ARE NOT CONSTRUCTED PER PLAN.

SCALE: 1"=10'

0 10 20 30

Know what's below. Call before you dig.

N:\projects\0896\engineering\acad\improvements\0896_05-07_grading.dwg; Last Saved By: jjenison - May 06, 2025 - 1:14pm Last Printed By: JJENISON - May 06, 2025, 1:28pm;

AGENCY

FLEWELLING & MOODY
architecture planning interiors

HEADQUARTERS OFFICE:
99 S. Lake Ave., Suite 300
Pasadena, CA 91101
323.543.8300
E-Mail: fm-pasadena@flewelling-moody.com

ANTELOPE VALLEY OFFICE:
1035 West Lancaster Boulevard
Lancaster, California 93534
661.949.0771
E-Mail: fm-lancaster@flewelling-moody.com

An Employee Owned Corporation

ARCHITECT

CONSULTANT

REGISTERED PROFESSIONAL ENGINEER
JOSIAH D. JENISON
NO 77454
CIVIL
STATE OF CALIFORNIA

ECG
Encompass Consultant Group
25115 AVE STANFORD, SUITE A330, SANTA CLARITA, CA 91355
PHONE: 661.600.9367 WEBSITE: WWW.ECGCIVIL.COM

Drawn by

Checked by

Revisions

No.	Date	Description

All dimensions must be checked at the job by the contractor who accepts full responsibility for their accuracy under the contract. These plans & the specifications in connection therewith have been prepared for a specific site. Any and all responsibility for their use in whole or in part on any other site is hereby disclaimed by Flewelling & Moody.

CITY OF RIDGECREST

SGT. JOHN PINNEY MEMORIAL POOL REPLACEMENT

205 S WARNER ST.
RIDGECREST, CA 93555

GRADING AND PAVING PLAN

Job No. 3055-0100

Date 05/02/2025

C3.02

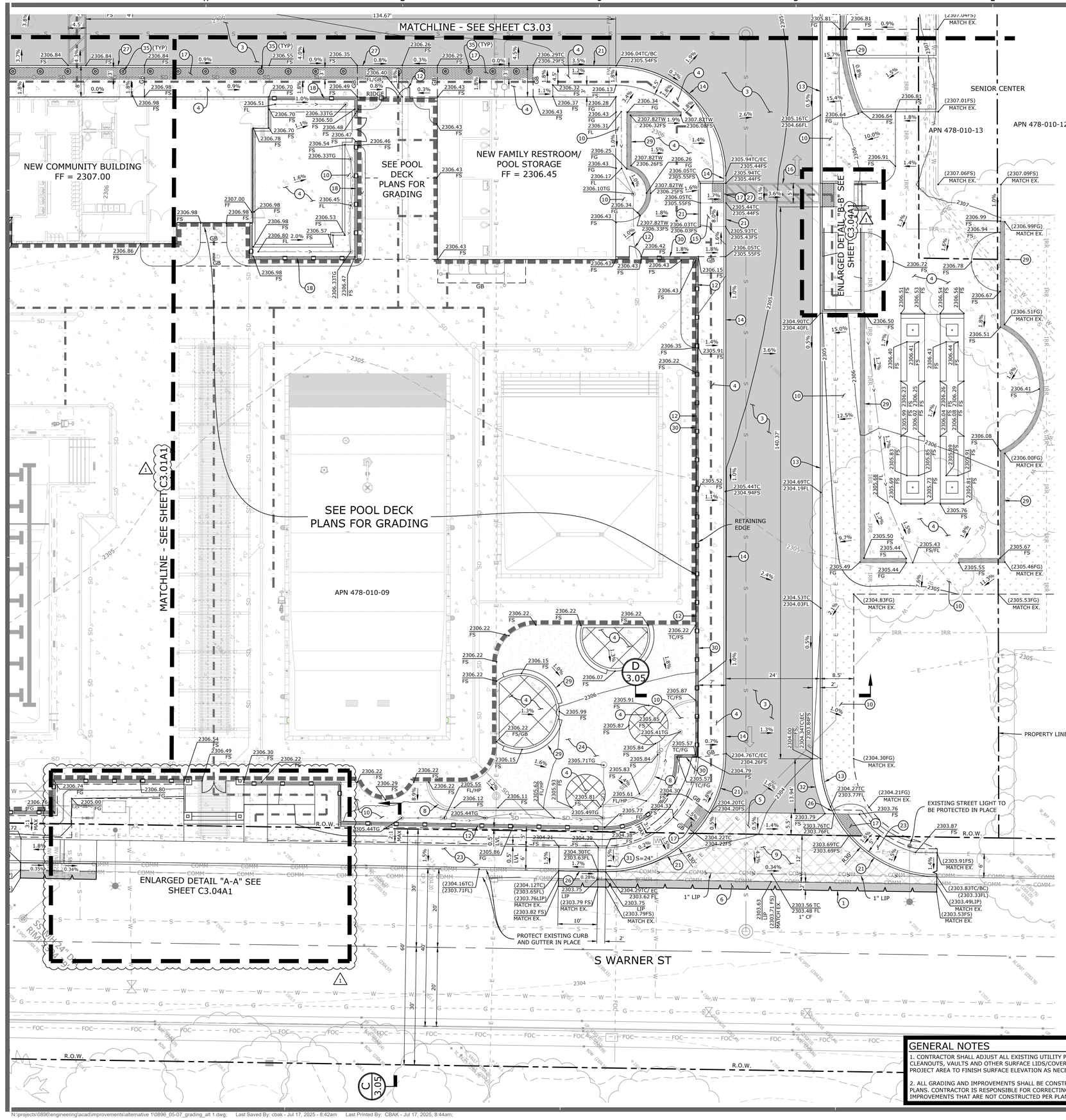

GRADING AND DRAINAGE CONSTRUCTION NOTES

1. SAWCUT PCC OR AC PAVEMENT TO LIMITS SHOWN.
2. CONSTRUCT PARKING STALL ASPHALT CONCRETE PAVEMENT PER DETAIL "A" ON SHEET C3.06.
3. CONSTRUCT DRIVE AISLE ASPHALT CONCRETE PAVEMENT PER DETAIL "B" ON SHEET C3.06.
4. CONSTRUCT PCC PEDESTRIAN PAVEMENT PER DETAIL "C" ON SHEET C3.06.
5. CONSTRUCT PCC VEHICULAR PAVEMENT PER DETAIL "D" ON SHEET C3.06.
6. CONSTRUCT AC AND BASE TO MATCH EXISTING STREET SECTION THICKNESSES.
7. CONSTRUCT 4' WIDE CONCRETE RIBBON GUTTER PER DETAIL "I" ON SHEET C3.06.
8. CONSTRUCT 0" CONCRETE HEADER PER LANDSCAPE ARCHITECT'S PLAN.
9. CONSTRUCT CONCRETE DRIVEWAY MODIFIED PER SPPWC STD PLAN 110-2, TYPE C ON SHEET C3.07.
10. CONSTRUCT LANDSCAPING PER LANDSCAPE ARCHITECT'S PLAN.
11. CONSTRUCT 10'x10' GROUTED RIP RAP PAD PER DETAIL "J" ON SHEET C3.06.
12. CONSTRUCT FENCE/GATE PER ARCHITECT'S PLAN.
13. CONSTRUCT 6" CURB AND 24" GUTTER PER CITY OF RIDGECREST STD PLATE ST-7, TYPE B ON SHEET C3.07.
14. CONSTRUCT 6" CURB PER SPPWC STD PLAN 120-3, TYPE A1-6(150) ON SHEET C3.07.
15. CONSTRUCT ADA RAMP, WALLS/CURBS AND HANDRAILS PER ARCHITECTURAL PLAN.
16. CONSTRUCT STRIPING PER ARCHITECTURAL PLANS.
17. CONSTRUCT TRUNCATED DOMES PER ARCHITECTURAL PLAN.
18. CONSTRUCT FENCE ON TOP OF WALL PER ARCHITECTURAL PLAN.
19. CONSTRUCT 4" CURB SPPWC STD PLAN 120-3, TYPE A1-6(150) ON SHEET C3.07 AND MODIFIED PER PLAN.
20. CONSTRUCT SCREEN WALL PER ARCHITECT'S PLANS.
21. CONSTRUCT VARIABLE HEIGHT CURB PER PLAN.
22. CONSTRUCT CONCRETE FLUME WITH GRATED COVER PER DETAIL "H" ON SHEET C3.06.
23. CONSTRUCT PCC PEDESTRIAN WALKWAY PER CITY OF RIDGECREST STD PLATE ST-8, TYPE II ON SHEET C3.07.
24. CONSTRUCT SOD TURF PER LANDSCAPE ARCHITECT'S PLAN.
25. CONSTRUCT STAIRS PER ARCHITECT'S PLAN.
26. CONSTRUCT VARIABLE HEIGHT CURB AND 24" GUTTER MODIFIED PER CITY OF RIDGECREST STD. PLATE ST-7, TYPE B ON SHEET C3.07.
27. CONSTRUCT 0" CURB AND MODIFIED PER SPPWC STD. PLAN 120-3, TYPE A1-6(150) ON SHEET C3.07.
28. CONSTRUCT TRASH ENCLOSURE PER ARCHITECT'S PLAN.
29. CONSTRUCT SEAT WALL PER LANDSCAPE ARCHITECT'S PLAN.
30. CONSTRUCT RETAINING CURB PER ARCHITECT'S PLAN.
31. CONSTRUCT PARKWAY DRAIN PER SPPWC STD. PLAN 151-3 ON SHEET C3.07, MODIFIED PER PLAN. INLET TYPE 1. "S" PER PLAN. CONSTRUCT CONNECTION TO ONSITE STORM DRAIN PER WET UTILITY PLAN.
32. CONSTRUCT GUTTER TRANSITION AS SHOWN. SEE PLAN FOR GUTTER LIP ELEVATIONS.
33. CONSTRUCT ACCESSIBLE PARKING SIGN PER ARCHITECTURAL SHEET A1.10, DETAIL 10.
34. CONSTRUCT VAN ACCESSIBLE PARKING SIGN PER ARCHITECTURAL SHEET A1.10, DETAIL 11.
35. CONSTRUCT BOLLARD PER ARCHITECTURAL SITE PLAN SHEET A1.01 AND SHEET A1.10, DETAIL 12.
36. CONSTRUCT 6" DIA. NDS SPEE-D CATCH BASIN WITH ATRIUM GRATE AND OUTLET 3" DIA. PIPE THROUGH CURB FACE AS SHOWN.

LEGEND

- PROPOSED PC CONCRETE - PEDESTRIAN
- PROPOSED PC CONCRETE - VEHICULAR
- PROPOSED ASPHALT CONCRETE - PARKING STALLS
- PROPOSED ASPHALT CONCRETE - DRIVE AISLE
- PROPOSED LANDSCAPING PER LANDSCAPE ARCHITECT'S PLAN
- PROPOSED SOD TURF PER LANDSCAPE ARCHITECT'S PLAN
- PROPOSED SAWCUT
- PROPOSED FENCE
- EXISTING FENCE
- RIGHT OF WAY/PROPERTY LINE
- GB — GRADE BREAK
- 2344 — EXISTING MINOR CONTOURS
- 2345 — EXISTING MAJOR CONTOURS
- 2344 — PROPOSED MINOR CONTOURS
- 2345 — PROPOSED MAJOR CONTOURS
- PROPOSED FLOWLINE
- SD — PROPOSED STORM DRAIN
- FW — PROPOSED FIRE WATER
- W — PROPOSED WATER LINE
- S — PROPOSED SEWER LINE
- EXISTING STREET CENTERLINE
- STORM DRAIN INLET
- OHW — EXISTING OVER HEAD WIRE
- E — EXISTING ELECTRICAL LINE
- G — EXISTING GAS LINE
- W — EXISTING WATER LINE
- SD — EXISTING STORM DRAIN LINE
- FW — EXISTING FIREWATER LINE
- S — EXISTING SEWER LINE
- COMM — EXISTING COMMUNICATION LINE
- 2410.00 FS — PROPOSED ELEVATION
- (2410.00) EG — EXISTING ELEVATION
- 1.5% — PROPOSED GRADE
- PATH OF TRAVEL

GENERAL NOTES

1. CONTRACTOR SHALL ADJUST ALL EXISTING UTILITY PULL BOXS, CLEANOUTS, VAULTS AND OTHER SURFACE LIDS/COVERS WITHIN THE PROJECT AREA TO FINISH SURFACE ELEVATION AS NECESSARY.
2. ALL GRADING AND IMPROVEMENTS SHALL BE CONSTRUCTED AS NOTED ON PLANS. CONTRACTOR IS RESPONSIBLE FOR CORRECTING ANY GRADING OR IMPROVEMENTS THAT ARE NOT CONSTRUCTED PER PLAN.

SCALE: 1"=10'

0 10 20 30

Know what's below. Call before you dig.

AGENCY

FLEWELLING & MOODY
architecture planning interiors

HEADQUARTERS OFFICE:
99 S. Lake Ave., Suite 300
Pasadena, CA 91101
323.543.8300
E-Mail: fm-pasadena@flewelling-moody.com

ANTELOPE VALLEY OFFICE:
1035 West Lancaster Boulevard
Lancaster, California 93534
661.949.0771
E-Mail: fm-lancaster@flewelling-moody.com

An Employee Owned Corporation

ARCHITECT

CONSULTANT

REGISTERED PROFESSIONAL ENGINEER JOSIAH D. JENSEN NO 77454 CIVIL STATE OF CALIFORNIA

ECG Encompass Consultant Group
25115 AVE STANFORD, SUITE A330, SANTA CLARITA, CA 91355
PHONE: 661.600.9367 WEBSITE: WWW.ECGCIVIL.COM

Drawn by

Checked by

Revisions

No.	Date	Description
1	08/27/2025	BID ALTERNATIVE

All dimensions must be checked at the job by the contractor who accepts full responsibility for their accuracy under the contract. These plans & the specifications in connection therewith have been prepared for a specific site. Any and all responsibility for their use in whole or in part on any other site is hereby disclaimed by Flewelling & Moody.

CITY OF RIDGECREST

SGT. JOHN PINNEY MEMORIAL POOL REPLACEMENT

205 S WARNER ST
RIDGECREST, CA 93555

GRADING AND PAVING PLAN ALT 1

Job No. 3055-0100

Date 06/25/2025

C3.02A1

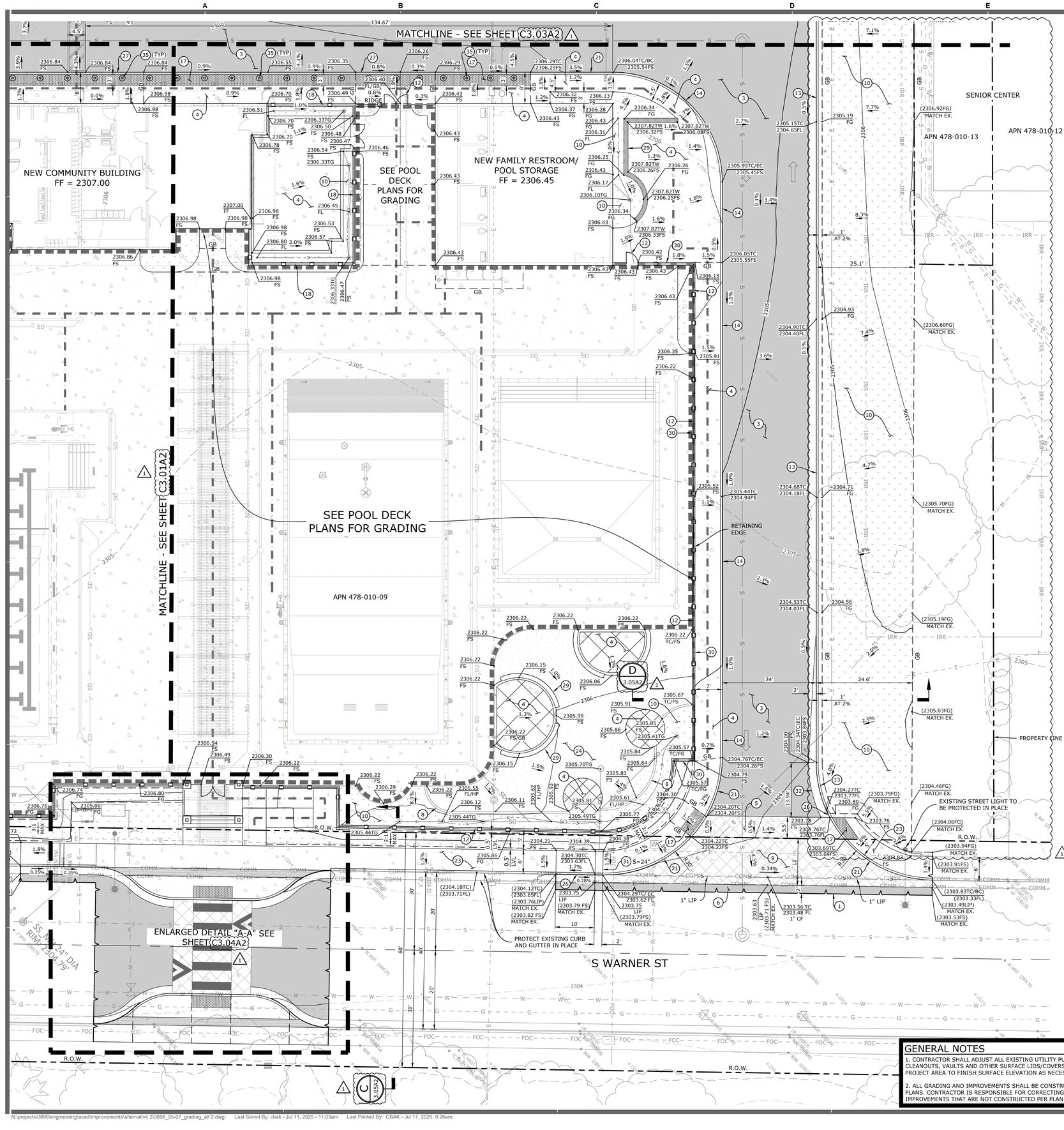

GRADING AND DRAINAGE CONSTRUCTION NOTES

1. SAWCUT PCC OR AC PAVEMENT TO LIMITS SHOWN.
2. CONSTRUCT PARKING STALL ASPHALT CONCRETE PAVEMENT PER DETAIL "A" ON SHEET C3.06.
3. CONSTRUCT DRIVE AISLE ASPHALT CONCRETE PAVEMENT PER DETAIL "B" ON SHEET C3.06.
4. CONSTRUCT PCC PEDESTRIAN PAVEMENT PER DETAIL "C" ON SHEET C3.06.
5. CONSTRUCT PCC VEHICULAR PAVEMENT PER DETAIL "D" ON SHEET C3.06.
6. CONSTRUCT AC AND BASE TO MATCH EXISTING STREET SECTION THICKNESSES.
7. CONSTRUCT 4' WIDE CONCRETE RIBBON GUTTER PER DETAIL "I" ON SHEET C3.06.
8. CONSTRUCT 0" CONCRETE HEADER PER LANDSCAPE ARCHITECT'S PLAN.
9. CONSTRUCT CONCRETE DRIVEWAY MODIFIED PER SPPWC STD PLAN 110-2, TYPE C ON SHEET C3.07.
10. CONSTRUCT LANDSCAPING PER LANDSCAPE ARCHITECT'S PLAN.
11. CONSTRUCT 10'x10' GROUTED RIP RAP PAD PER DETAIL "J" ON SHEET C3.06.
12. CONSTRUCT FENCE/GATE PER ARCHITECT'S PLAN.
13. CONSTRUCT 6" CURB AND 24" GUTTER PER CITY OF RIDGECREST STD PLATE ST-7, TYPE B ON SHEET C3.07.
14. CONSTRUCT 6" CURB PER SPPWC STD PLAN 120-3, TYPE A1-6(150) ON SHEET C3.07.
15. CONSTRUCT ADA RAMP, WALLS/CURBS AND HANDRAILS PER ARCHITECTURAL PLAN.
16. CONSTRUCT STRIPING PER ARCHITECTURAL PLANS.
17. CONSTRUCT TRUNCATED DOMES PER ARCHITECTURAL PLAN.
18. CONSTRUCT FENCE ON TOP OF WALL PER ARCHITECTURAL PLAN.
19. CONSTRUCT 4" CURB SPPWC STD PLAN 120-3, TYPE A1-6(150) ON SHEET C3.07 AND MODIFIED PER PLAN.
20. CONSTRUCT SCREEN WALL PER ARCHITECT'S PLANS.
21. CONSTRUCT VARIABLE HEIGHT CURB PER PLAN.
22. CONSTRUCT CONCRETE FLUME WITH GRATED COVER PER DETAIL "H" ON SHEET C3.06.
23. CONSTRUCT PCC PEDESTRIAN WALKWAY PER CITY OF RIDGECREST STD PLATE ST-8, TYPE II ON SHEET C3.07.
24. CONSTRUCT SOD TURF PER LANDSCAPE ARCHITECT'S PLAN.
25. CONSTRUCT STAIRS PER ARCHITECT'S PLAN.
26. CONSTRUCT VARIABLE HEIGHT CURB AND 24" GUTTER MODIFIED PER CITY OF RIDGECREST STD. PLATE ST-7, TYPE B ON SHEET C3.07.
27. CONSTRUCT 0" CURB AND MODIFIED PER SPPWC STD. PLAN 120-3, TYPE A1-6(150) ON SHEET C3.07.
28. CONSTRUCT TRASH ENCLOSURE PER ARCHITECT'S PLAN.
29. CONSTRUCT SEAT WALL PER LANDSCAPE ARCHITECT'S PLAN.
30. CONSTRUCT RETAINING CURB PER ARCHITECT'S PLAN.
31. CONSTRUCT PARKWAY DRAIN PER SPPWC STD. PLAN 151-3 ON SHEET C3.07, MODIFIED PER PLAN. INLET TYPE 1. "S" PER PLAN. CONSTRUCT CONNECTION TO ONSITE STORM DRAIN PER WET UTILITY PLAN.
32. CONSTRUCT GUTTER TRANSITION AS SHOWN. SEE PLAN FOR GUTTER LIP ELEVATIONS.
33. CONSTRUCT ACCESSIBLE PARKING SIGN PER ARCHITECTURAL SHEET A1.10, DETAIL 10.
34. CONSTRUCT VAN ACCESSIBLE PARKING SIGN PER ARCHITECTURAL SHEET A1.10, DETAIL 11.
35. CONSTRUCT BOLLARD PER ARCHITECTURAL SITE PLAN SHEET A1.01 AND SHEET A1.10, DETAIL 12.
36. CONSTRUCT 6" DIA. NDS SPEE-D CATCH BASIN WITH ATRIUM GRATE AND OUTLET 3" DIA. PIPE THROUGH CURB FACE AS SHOWN.

LEGEND

- PROPOSED PC CONCRETE - PEDESTRIAN
- PROPOSED PC CONCRETE - VEHICULAR
- PROPOSED ASPHALT CONCRETE - PARKING STALLS
- PROPOSED ASPHALT CONCRETE - DRIVE AISLE
- PROPOSED LANDSCAPING PER LANDSCAPE ARCHITECT'S PLAN
- PROPOSED SOD TURF PER LANDSCAPE ARCHITECT'S PLAN
- PROPOSED SAWCUT
- PROPOSED FENCE
- EXISTING FENCE
- RIGHT OF WAY/PROPERTY LINE
- GB — GRADE BREAK
- 2344 — EXISTING MINOR CONTOURS
- 2345 — EXISTING MAJOR CONTOURS
- 2344 — PROPOSED MINOR CONTOURS
- 2345 — PROPOSED MAJOR CONTOURS
- PROPOSED FLOWLINE
- SD — PROPOSED STORM DRAIN
- FW — PROPOSED FIRE WATER
- W — PROPOSED WATER LINE
- S — PROPOSED SEWER LINE
- EXISTING STREET CENTERLINE
- STORM DRAIN INLET
- OHW — EXISTING OVER HEAD WIRE
- E — EXISTING ELECTRICAL LINE
- G — EXISTING GAS LINE
- W — EXISTING WATER LINE
- SD — EXISTING STORM DRAIN LINE
- FW — EXISTING FIREWATER LINE
- S — EXISTING SEWER LINE
- COMM — EXISTING COMMUNICATION LINE
- 2410.00 FS — PROPOSED ELEVATION
- (2410.00) EG — EXISTING ELEVATION
- 1.5% — PROPOSED GRADE
- PATH OF TRAVEL

GENERAL NOTES

1. CONTRACTOR SHALL ADJUST ALL EXISTING UTILITY PULL BOXS, CLEANOUTS, VAULTS AND OTHER SURFACE LIDS/COVERS WITHIN THE PROJECT AREA TO FINISH SURFACE ELEVATION AS NECESSARY.

2. ALL GRADING AND IMPROVEMENTS SHALL BE CONSTRUCTED AS NOTED ON PLANS. CONTRACTOR IS RESPONSIBLE FOR CORRECTING ANY GRADING OR IMPROVEMENTS THAT ARE NOT CONSTRUCTED PER PLAN.

SCALE: 1"=10'
0 10 20 30 m

Know what's below. Call before you dig.

AGENCY

FLEWELLING & MOODY
architecture planning interiors

HEADQUARTERS OFFICE:
99 S. Lake Ave., Suite 300
Pasadena, CA 91101
323.543.8300
E-Mail: fm-pasadena@flewelling-moody.com

ANTELOPE VALLEY OFFICE:
1035 West Lancaster Boulevard
Lancaster, California 93534
661.949.0771
E-Mail: fm-lancaster@flewelling-moody.com

An Employee Owned Corporation

ARCHITECT

CONSULTANT

REGISTERED PROFESSIONAL ENGINEER JOSIAH D. JENSEN NO 77454 CIVIL STATE OF CALIFORNIA

ECG Encompass Consultant Group
25115 AVE STANFORD, SUITE A320, SANTA CLARITA, CA 91355
PHONE: 661.600.9367 WEBSITE: WWW.ECGCIVIL.COM

Drawn by

Checked by

Revisions

No.	Date	Description
1	08/27/2025	BID ALTERNATIVE

All dimensions must be checked at the job by the contractor who accepts full responsibility for their accuracy under the contract. These plans & the specifications in connection therewith have been prepared for a specific site. Any and all responsibility for their use in whole or in part on any other site is hereby disclaimed by Flewelling & Moody.

CITY OF RIDGECREST

SGT. JOHN PINNEY MEMORIAL POOL REPLACEMENT

205 S WARNER ST.
RIDGECREST, CA 93555

GRADING AND PAVING PLAN ALT 2

Job No.
3055-0100

Date
06/25/2025

C3.02A2

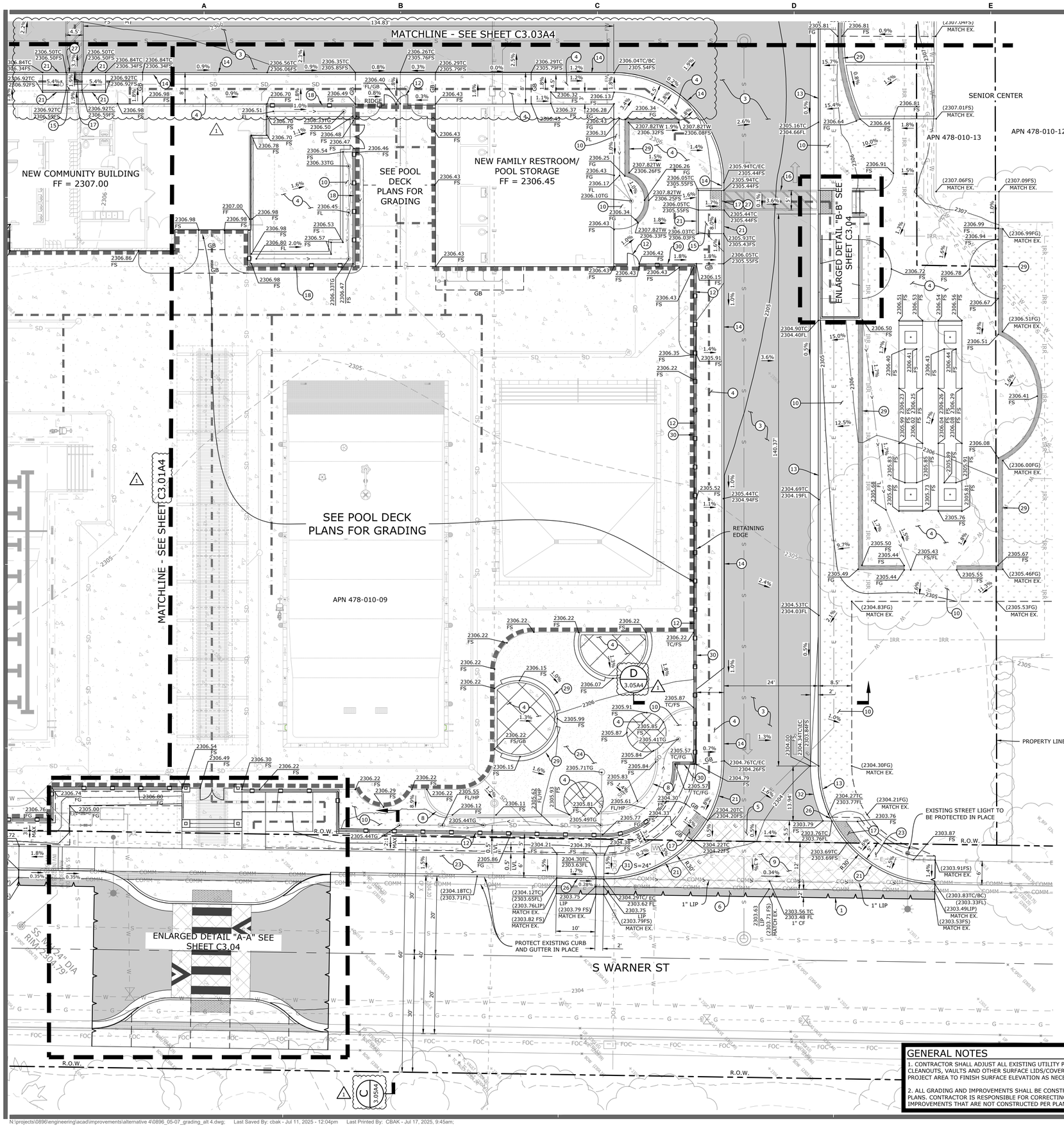

GRADING AND DRAINAGE CONSTRUCTION NOTES

1. SAWCUT PCC OR AC PAVEMENT TO LIMITS SHOWN.
2. CONSTRUCT PARKING STALL ASPHALT CONCRETE PAVEMENT PER DETAIL "A" ON SHEET C3.06.
3. CONSTRUCT DRIVE AISLE ASPHALT CONCRETE PAVEMENT PER DETAIL "B" ON SHEET C3.06.
4. CONSTRUCT PCC PEDESTRIAN PAVEMENT PER DETAIL "C" ON SHEET C3.06.
5. CONSTRUCT PCC VEHICULAR PAVEMENT PER DETAIL "D" ON SHEET C3.06.
6. CONSTRUCT AC AND BASE TO MATCH EXISTING STREET SECTION THICKNESSES.
7. CONSTRUCT 4' WIDE CONCRETE RIBBON GUTTER PER DETAIL "I" ON SHEET C3.06.
8. CONSTRUCT 0" CONCRETE HEADER PER LANDSCAPE ARCHITECT'S PLAN.
9. CONSTRUCT CONCRETE DRIVEWAY MODIFIED PER SPPWC STD PLAN 110-2, TYPE C ON SHEET C3.07.
10. CONSTRUCT LANDSCAPING PER LANDSCAPE ARCHITECT'S PLAN.
11. CONSTRUCT 10'x10' GROUTED RIP RAP PAD PER DETAIL "J" ON SHEET C3.06.
12. CONSTRUCT FENCE/GATE PER ARCHITECT'S PLAN.
13. CONSTRUCT 6" CURB AND 24" GUTTER PER CITY OF RIDGECREST STD PLATE ST-7, TYPE B ON SHEET C3.07.
14. CONSTRUCT 6" CURB PER SPPWC STD PLAN 120-3, TYPE A1-6(150) ON SHEET C3.07.
15. CONSTRUCT ADA RAMP, WALLS/CURBS AND HANDRAILS PER ARCHITECTURAL PLANS.
16. CONSTRUCT STRIPING PER ARCHITECTURAL PLANS.
17. CONSTRUCT TRUNCATED DOMES PER ARCHITECTURAL PLAN.
18. CONSTRUCT FENCE ON TOP OF WALL PER ARCHITECTURAL PLAN.
19. CONSTRUCT 4" CURB SPPWC STD PLAN 120-3, TYPE A1-6(150) ON SHEET C3.07 AND MODIFIED PER PLAN.
20. CONSTRUCT SCREEN WALL PER ARCHITECT'S PLANS.
21. CONSTRUCT VARIABLE HEIGHT CURB PER PLAN.
22. CONSTRUCT CONCRETE FLUME WITH GRATED COVER PER DETAIL "H" ON SHEET C3.06.
23. CONSTRUCT PCC PEDESTRIAN WALKWAY PER CITY OF RIDGECREST STD PLATE ST-8, TYPE II ON SHEET C3.07.
24. CONSTRUCT SOD TURF PER LANDSCAPE ARCHITECT'S PLAN.
25. CONSTRUCT STAIRS PER ARCHITECT'S PLAN.
26. CONSTRUCT VARIABLE HEIGHT CURB AND 24" GUTTER MODIFIED PER CITY OF RIDGECREST STD. PLATE ST-7, TYPE B ON SHEET C3.07.
27. CONSTRUCT 0" CURB AND MODIFIED PER SPPWC STD. PLAN 120-3, TYPE A1-6(150) ON SHEET C3.07.
28. CONSTRUCT TRASH ENCLOSURE PER ARCHITECT'S PLAN.
29. CONSTRUCT SEAT WALL PER LANDSCAPE ARCHITECT'S PLAN.
30. CONSTRUCT RETAINING CURB PER ARCHITECT'S PLAN.
31. CONSTRUCT PARKWAY DRAIN PER SPPWC STD. PLAN 151-3 ON SHEET C3.07, MODIFIED PER PLAN. INLET TYPE 1. "S" PER PLAN. CONSTRUCT CONNECTION TO ONSITE STORM DRAIN PER WET UTILITY PLAN.
32. CONSTRUCT GUTTER TRANSITION AS SHOWN. SEE PLAN FOR GUTTER LIP ELEVATIONS.
33. CONSTRUCT ACCESSIBLE PARKING SIGN PER ARCHITECTURAL SHEET A1.10, DETAIL 10.
34. CONSTRUCT VAN ACCESSIBLE PARKING SIGN PER ARCHITECTURAL SHEET A1.10, DETAIL 11.
35. CONSTRUCT BOLLARD PER ARCHITECTURAL SITE PLAN SHEET A1.01 AND SHEET A1.10, DETAIL 12.
36. CONSTRUCT 6" DIA. NDS SPEE-D CATCH BASIN WITH ATRIUM GRATE AND OUTLET 3" DIA. PIPE THROUGH CURB FACE AS SHOWN.

LEGEND

- PROPOSED PC CONCRETE - PEDESTRIAN
- PROPOSED PC CONCRETE - VEHICULAR
- PROPOSED ASPHALT CONCRETE - PARKING STALLS
- PROPOSED ASPHALT CONCRETE - DRIVE AISLE
- PROPOSED LANDSCAPING PER LANDSCAPE ARCHITECT'S PLAN
- PROPOSED SOD TURF PER LANDSCAPE ARCHITECT'S PLAN
- PROPOSED SAWCUT
- PROPOSED FENCE
- EXISTING FENCE
- RIGHT OF WAY/PROPERTY LINE
- GB — GRADE BREAK
- 2344 — EXISTING MINOR CONTOURS
- 2345 — EXISTING MAJOR CONTOURS
- 2344 — PROPOSED MINOR CONTOURS
- 2345 — PROPOSED MAJOR CONTOURS
- PROPOSED FLOWLINE
- SD — PROPOSED STORM DRAIN
- FW — PROPOSED FIRE WATER
- W — PROPOSED WATER LINE
- S — PROPOSED SEWER LINE
- EXISTING STREET CENTERLINE
- STORM DRAIN INLET
- OHW — EXISTING OVER HEAD WIRE
- E — EXISTING ELECTRICAL LINE
- G — EXISTING GAS LINE
- W — EXISTING WATER LINE
- SD — EXISTING STORM DRAIN LINE
- FW — EXISTING FIREWATER LINE
- S — EXISTING SEWER LINE
- COMM — EXISTING COMMUNICATION LINE
- 2410.00 FS — PROPOSED ELEVATION
- (2410.00) EG — EXISTING ELEVATION
- 1.5% — PROPOSED GRADE
- PATH OF TRAVEL

GENERAL NOTES

1. CONTRACTOR SHALL ADJUST ALL EXISTING UTILITY PULL BOXS, CLEANOUTS, VAULTS AND OTHER SURFACE LIDS/COVERS WITHIN THE PROJECT AREA TO FINISH SURFACE ELEVATION AS NECESSARY.

2. ALL GRADING AND IMPROVEMENTS SHALL BE CONSTRUCTED AS NOTED ON PLANS. CONTRACTOR IS RESPONSIBLE FOR CORRECTING ANY GRADING OR IMPROVEMENTS THAT ARE NOT CONSTRUCTED PER PLAN.

SCALE: 1"=10'
0 10 20 30

Know what's below. Call before you dig.

AGENCY

FLEWELLING & MOODY
architecture planning interiors

HEADQUARTERS OFFICE:
99 S. Lake Ave., Suite 300
Pasadena, CA 91101
323.543.8300
E-Mail: fm-pasadena@flewelling-moody.com

ANTELOPE VALLEY OFFICE:
1035 West Lancaster Boulevard
Lancaster, California 93534
661.949.0771
E-Mail: fm-lancaster@flewelling-moody.com

An Employee Owned Corporation

ARCHITECT

CONSULTANT

REGISTERED PROFESSIONAL ENGINEER
JOSIAH D. JENSEN
NO 77454
CIVIL
STATE OF CALIFORNIA

ECG Encompass Consultant Group
25115 AVE STANFORD, SUITE A320, SANTA CLARITA, CA 91355
PHONE: 661.600.9367 WEBSITE: WWW.ECGCIVIL.COM

Drawn by

Checked by

Revisions

No.	Date	Description
1	08/27/2025	BID ALTERNATIVE

All dimensions must be checked at the job by the contractor who accepts full responsibility for their accuracy under the contract. These plans & the specifications in connection therewith have been prepared for a specific site. Any and all responsibility for their use in whole or in part on any other site is hereby disclaimed by Flewelling & Moody.

CITY OF RIDGECREST

SGT. JOHN PINNEY MEMORIAL POOL REPLACEMENT

205 S WARNER ST.
RIDGECREST, CA 93555

GRADING AND PAVING PLAN ALT 4

Job No. 3055-0100

Date 06/25/2025

C3.02A4

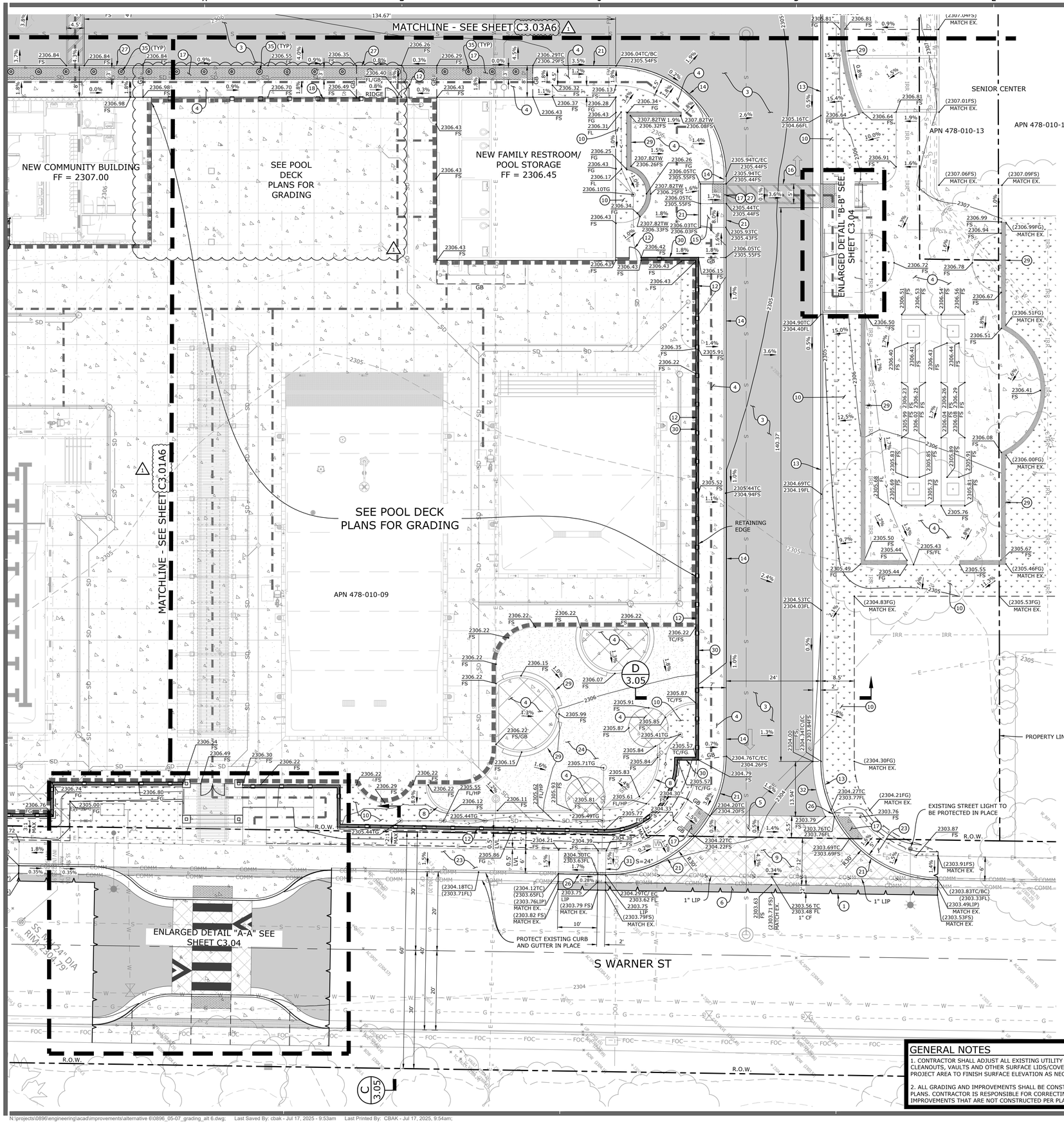

GRADING AND DRAINAGE CONSTRUCTION NOTES

1. SAWCUT PCC OR AC PAVEMENT TO LIMITS SHOWN.
2. CONSTRUCT PARKING STALL ASPHALT CONCRETE PAVEMENT PER DETAIL "A" ON SHEET C3.06.
3. CONSTRUCT DRIVE AISLE ASPHALT CONCRETE PAVEMENT PER DETAIL "B" ON SHEET C3.06.
4. CONSTRUCT PCC PEDESTRIAN PAVEMENT PER DETAIL "C" ON SHEET C3.06.
5. CONSTRUCT PCC VEHICULAR PAVEMENT PER DETAIL "D" ON SHEET C3.06.
6. CONSTRUCT AC AND BASE TO MATCH EXISTING STREET SECTION THICKNESSES.
7. CONSTRUCT 4' WIDE CONCRETE RIBBON GUTTER PER DETAIL "I" ON SHEET C3.06.
8. CONSTRUCT 0" CONCRETE HEADER PER LANDSCAPE ARCHITECT'S PLAN.
9. CONSTRUCT CONCRETE DRIVEWAY MODIFIED PER SPPWC STD PLAN 110-2, TYPE C ON SHEET C3.07.
10. CONSTRUCT LANDSCAPING PER LANDSCAPE ARCHITECT'S PLAN.
11. CONSTRUCT 10'x10' GROUTED RIP RAP PAD PER DETAIL "J" ON SHEET C3.06.
12. CONSTRUCT FENCE/GATE PER ARCHITECT'S PLAN.
13. CONSTRUCT 6" CURB AND 24" GUTTER PER CITY OF RIDGECREST STD PLATE ST-7, TYPE B ON SHEET C3.07.
14. CONSTRUCT 6" CURB PER SPPWC STD PLAN 120-3, TYPE A1-6(150) ON SHEET C3.07.
15. CONSTRUCT ADA RAMP, WALLS/CURBS AND HANDRAILS PER ARCHITECTURAL PLAN.
16. CONSTRUCT STRIPING PER ARCHITECTURAL PLANS.
17. CONSTRUCT TRUNCATED DOMES PER ARCHITECTURAL PLAN.
18. CONSTRUCT FENCE ON TOP OF WALL PER ARCHITECTURAL PLAN.
19. CONSTRUCT 4" CURB SPPWC STD PLAN 120-3, TYPE A1-6(150) ON SHEET C3.07 AND MODIFIED PER PLAN.
20. CONSTRUCT SCREEN WALL PER ARCHITECT'S PLANS.
21. CONSTRUCT VARIABLE HEIGHT CURB PER PLAN.
22. CONSTRUCT CONCRETE FLUME WITH GRATED COVER PER DETAIL "H" ON SHEET C3.06.
23. CONSTRUCT PCC PEDESTRIAN WALKWAY PER CITY OF RIDGECREST STD PLATE ST-8, TYPE II ON SHEET C3.07.
24. CONSTRUCT SOD TURF PER LANDSCAPE ARCHITECT'S PLAN.
25. CONSTRUCT STAIRS PER ARCHITECT'S PLAN.
26. CONSTRUCT VARIABLE HEIGHT CURB AND 24" GUTTER MODIFIED PER CITY OF RIDGECREST STD. PLATE ST-7, TYPE B ON SHEET C3.07.
27. CONSTRUCT 0" CURB AND MODIFIED PER SPPWC STD. PLAN 120-3, TYPE A1-6(150) ON SHEET C3.07.
28. CONSTRUCT TRASH ENCLOSURE PER ARCHITECT'S PLAN.
29. CONSTRUCT SEAT WALL PER LANDSCAPE ARCHITECT'S PLAN.
30. CONSTRUCT RETAINING CURB PER ARCHITECT'S PLAN.
31. CONSTRUCT PARKWAY DRAIN PER SPPWC STD. PLAN 151-3 ON SHEET C3.07, MODIFIED PER PLAN. INLET TYPE 1. "S" PER PLAN. CONSTRUCT CONNECTION TO ONSITE STORM DRAIN PER WET UTILITY PLAN.
32. CONSTRUCT GUTTER TRANSITION AS SHOWN. SEE PLAN FOR GUTTER LIP ELEVATIONS.
33. CONSTRUCT ACCESSIBLE PARKING SIGN PER ARCHITECTURAL SHEET A1.10, DETAIL 10.
34. CONSTRUCT VAN ACCESSIBLE PARKING SIGN PER ARCHITECTURAL SHEET A1.10, DETAIL 11.
35. CONSTRUCT BOLLARD PER ARCHITECTURAL SITE PLAN SHEET A1.01 AND SHEET A1.10, DETAIL 12.
36. CONSTRUCT 6" DIA. NDS SPEE-D CATCH BASIN WITH ATRIUM GRATE AND OUTLET 3" DIA. PIPE THROUGH CURB FACE AS SHOWN.

LEGEND

- PROPOSED PC CONCRETE - PEDESTRIAN
- PROPOSED PC CONCRETE - VEHICULAR
- PROPOSED ASPHALT CONCRETE - PARKING STALLS
- PROPOSED ASPHALT CONCRETE - DRIVE AISLE
- PROPOSED LANDSCAPING PER LANDSCAPE ARCHITECT'S PLAN
- PROPOSED SOD TURF PER LANDSCAPE ARCHITECT'S PLAN
- PROPOSED SAWCUT
- PROPOSED FENCE
- EXISTING FENCE
- RIGHT OF WAY/PROPERTY LINE
- GB — GRADE BREAK
- 2344 — EXISTING MINOR CONTOURS
- 2345 — EXISTING MAJOR CONTOURS
- 2344 — PROPOSED MINOR CONTOURS
- 2345 — PROPOSED MAJOR CONTOURS
- PROPOSED FLOWLINE
- SD — PROPOSED STORM DRAIN
- FW — PROPOSED FIRE WATER
- W — PROPOSED WATER LINE
- S — PROPOSED SEWER LINE
- EXISTING STREET CENTERLINE
- STORM DRAIN INLET
- OHW — EXISTING OVER HEAD WIRE
- E — EXISTING ELECTRICAL LINE
- G — EXISTING GAS LINE
- W — EXISTING WATER LINE
- SD — EXISTING STORM DRAIN LINE
- FW — EXISTING FIREWATER LINE
- S — EXISTING SEWER LINE
- COMM — EXISTING COMMUNICATION LINE
- 2410.00 FS — PROPOSED ELEVATION
- (2410.00) EG — EXISTING ELEVATION
- 1.5% — PROPOSED GRADE
- PATH OF TRAVEL

GENERAL NOTES

1. CONTRACTOR SHALL ADJUST ALL EXISTING UTILITY PULL BOXS, CLEANOUTS, VAULTS AND OTHER SURFACE LIDS/COVERS WITHIN THE PROJECT AREA TO FINISH SURFACE ELEVATION AS NECESSARY.

2. ALL GRADING AND IMPROVEMENTS SHALL BE CONSTRUCTED AS NOTED ON PLANS. CONTRACTOR IS RESPONSIBLE FOR CORRECTING ANY GRADING OR IMPROVEMENTS THAT ARE NOT CONSTRUCTED PER PLAN.

SCALE: 1"=10'
0 10 20 30

Know what's below. Call before you dig.

AGENCY

FLEWELLING & MOODY
architecture planning interiors

HEADQUARTERS OFFICE:
99 S. Lake Ave., Suite 300
Pasadena, CA 91101
323.543.8300
E-Mail: fm-pasadena@flewelling-moody.com

ANTELOPE VALLEY OFFICE:
1035 West Lancaster Boulevard
Lancaster, California 93534
661.949.0771
E-Mail: fm-lancaster@flewelling-moody.com

An Employee Owned Corporation

ARCHITECT

CONSULTANT

REGISTERED PROFESSIONAL ENGINEER
JOSIAH D. JENSEN
NO 77454
CIVIL
STATE OF CALIFORNIA

ECG
Encompass Consultant Group
25115 AVE STANFORD, SUITE A320, SANTA CLARITA, CA 91355
PHONE: 661.600.9367 WEBSITE: WWW.ECGCIVIL.COM

Drawn by

Checked by

Revisions

No.	Date	Description
1	08/27/2025	BID ALTERNATIVE

All dimensions must be checked at the job by the contractor who accepts full responsibility for their accuracy under the contract. These plans & the specifications in connection therewith have been prepared for a specific site. Any and all responsibility for their use in whole or in part on any other site is hereby disclaimed by Flewelling & Moody.

CITY OF RIDGECREST

SGT. JOHN PINNEY MEMORIAL POOL REPLACEMENT

205 S WARNER ST.
RIDGECREST, CA 93555

GRADING AND PAVING PLAN ALT 6

Job No.
3055-0100

Date
06/25/2025

C3.02A6

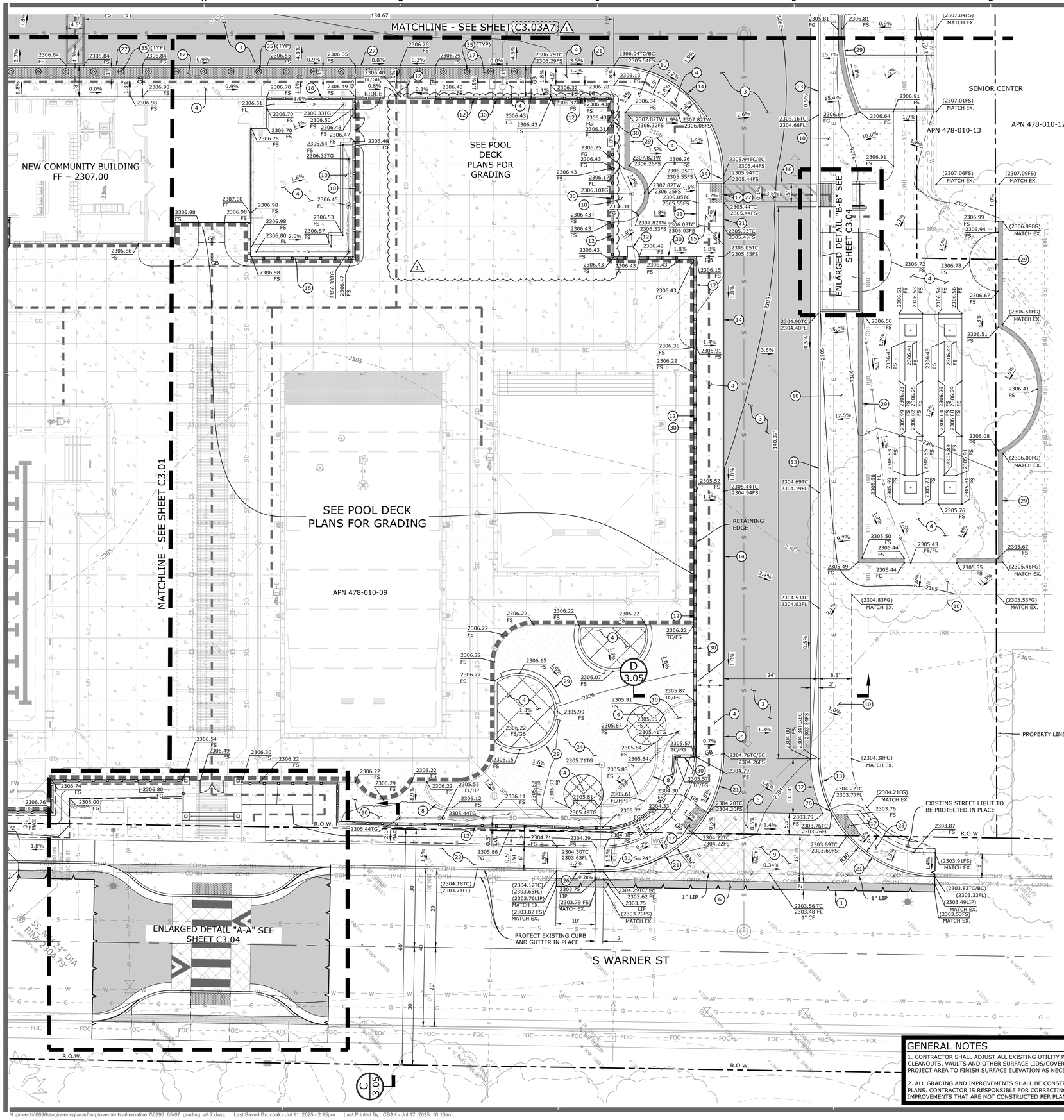

GRADING AND DRAINAGE CONSTRUCTION NOTES

1. SAWCUT PCC OR AC PAVEMENT TO LIMITS SHOWN.
2. CONSTRUCT PARKING STALL ASPHALT CONCRETE PAVEMENT PER DETAIL "A" ON SHEET C3.06.
3. CONSTRUCT DRIVE AISLE ASPHALT CONCRETE PAVEMENT PER DETAIL "B" ON SHEET C3.06.
4. CONSTRUCT PCC PEDESTRIAN PAVEMENT PER DETAIL "C" ON SHEET C3.06.
5. CONSTRUCT PCC VEHICULAR PAVEMENT PER DETAIL "D" ON SHEET C3.06.
6. CONSTRUCT AC AND BASE TO MATCH EXISTING STREET SECTION THICKNESSES.
7. CONSTRUCT 4' WIDE CONCRETE RIBBON GUTTER PER DETAIL "I" ON SHEET C3.06.
8. CONSTRUCT 0" CONCRETE HEADER PER LANDSCAPE ARCHITECT'S PLAN.
9. CONSTRUCT CONCRETE DRIVEWAY MODIFIED PER SPPWC STD PLAN 110-2, TYPE C ON SHEET C3.07.
10. CONSTRUCT LANDSCAPING PER LANDSCAPE ARCHITECT'S PLAN.
11. CONSTRUCT 10'x10' GROUTED RIP RAP PAD PER DETAIL "J" ON SHEET C3.06.
12. CONSTRUCT FENCE/GATE PER ARCHITECT'S PLAN.
13. CONSTRUCT 6" CURB AND 24" GUTTER PER CITY OF RIDGECREST STD PLATE ST-7, TYPE B ON SHEET C3.07.
14. CONSTRUCT 6" CURB PER SPPWC STD PLAN 120-3, TYPE A1-6(150) ON SHEET C3.07.
15. CONSTRUCT ADA RAMP, WALLS/CURBS AND HANDRAILS PER ARCHITECTURAL PLAN.
16. CONSTRUCT STRIPING PER ARCHITECTURAL PLANS.
17. CONSTRUCT TRUNCATED DOMES PER ARCHITECTURAL PLAN.
18. CONSTRUCT FENCE ON TOP OF WALL PER ARCHITECTURAL PLAN.
19. CONSTRUCT 4" CURB SPPWC STD PLAN 120-3, TYPE A1-6(150) ON SHEET C3.07 AND MODIFIED PER PLAN.
20. CONSTRUCT SCREEN WALL PER ARCHITECT'S PLANS.
21. CONSTRUCT VARIABLE HEIGHT CURB PER PLAN.
22. CONSTRUCT CONCRETE FLUME WITH GRATED COVER PER DETAIL "H" ON SHEET C3.06.
23. CONSTRUCT PCC PEDESTRIAN WALKWAY PER CITY OF RIDGECREST STD PLATE ST-8, TYPE II ON SHEET C3.07.
24. CONSTRUCT SOD TURF PER LANDSCAPE ARCHITECT'S PLAN.
25. CONSTRUCT STAIRS PER ARCHITECT'S PLAN.
26. CONSTRUCT VARIABLE HEIGHT CURB AND 24" GUTTER MODIFIED PER CITY OF RIDGECREST STD. PLATE ST-7, TYPE B ON SHEET C3.07.
27. CONSTRUCT 0" CURB AND MODIFIED PER SPPWC STD. PLAN 120-3, TYPE A1-6(150) ON SHEET C3.07.
28. CONSTRUCT TRASH ENCLOSURE PER ARCHITECT'S PLAN.
29. CONSTRUCT SEAT WALL PER LANDSCAPE ARCHITECT'S PLAN.
30. CONSTRUCT RETAINING CURB PER ARCHITECT'S PLAN.
31. CONSTRUCT PARKWAY DRAIN PER SPPWC STD. PLAN 151-3 ON SHEET C3.07, MODIFIED PER PLAN. INLET TYPE 1. "S" PER PLAN. CONSTRUCT CONNECTION TO ONSITE STORM DRAIN PER WET UTILITY PLAN.
32. CONSTRUCT GUTTER TRANSITION AS SHOWN. SEE PLAN FOR GUTTER LIP ELEVATIONS.
33. CONSTRUCT ACCESSIBLE PARKING SIGN PER ARCHITECTURAL SHEET A1.10, DETAIL 10.
34. CONSTRUCT VAN ACCESSIBLE PARKING SIGN PER ARCHITECTURAL SHEET A1.10, DETAIL 11.
35. CONSTRUCT BOLLARD PER ARCHITECTURAL SITE PLAN SHEET A1.01 AND SHEET A1.10, DETAIL 12.
36. CONSTRUCT 6" DIA. NDS SPEE-D CATCH BASIN WITH ATRIUM GRATE AND OUTLET 3" DIA. PIPE THROUGH CURB FACE AS SHOWN.

LEGEND

- PROPOSED PC CONCRETE - PEDESTRIAN
- PROPOSED PC CONCRETE - VEHICULAR
- PROPOSED ASPHALT CONCRETE - PARKING STALLS
- PROPOSED ASPHALT CONCRETE - DRIVE AISLE
- PROPOSED LANDSCAPING PER LANDSCAPE ARCHITECT'S PLAN
- PROPOSED SOD TURF PER LANDSCAPE ARCHITECT'S PLAN
- PROPOSED SAWCUT
- PROPOSED FENCE
- EXISTING FENCE
- RIGHT OF WAY/PROPERTY LINE
- GB — GRADE BREAK
- 2344 — EXISTING MINOR CONTOURS
- 2345 — EXISTING MAJOR CONTOURS
- 2344 — PROPOSED MINOR CONTOURS
- 2345 — PROPOSED MAJOR CONTOURS
- PROPOSED FLOWLINE
- SD — PROPOSED STORM DRAIN
- FW — PROPOSED FIRE WATER
- W — PROPOSED WATER LINE
- S — PROPOSED SEWER LINE
- EXISTING STREET CENTERLINE
- EXISTING STORM DRAIN INLET
- OHW — EXISTING OVER HEAD WIRE
- E — EXISTING ELECTRICAL LINE
- G — EXISTING GAS LINE
- W — EXISTING WATER LINE
- SD — EXISTING STORM DRAIN LINE
- FW — EXISTING FIREWATER LINE
- S — EXISTING SEWER LINE
- COMM — EXISTING COMMUNICATION LINE
- 2410.00 FS — PROPOSED ELEVATION
- (2410.00) EG — EXISTING ELEVATION
- 1.5% — PROPOSED GRADE
- PATH OF TRAVEL

GENERAL NOTES

1. CONTRACTOR SHALL ADJUST ALL EXISTING UTILITY PULL BOXS, CLEANOUTS, VAULTS AND OTHER SURFACE LIDS/COVERS WITHIN THE PROJECT AREA TO FINISH SURFACE ELEVATION AS NECESSARY.

2. ALL GRADING AND IMPROVEMENTS SHALL BE CONSTRUCTED AS NOTED ON PLANS. CONTRACTOR IS RESPONSIBLE FOR CORRECTING ANY GRADING OR IMPROVEMENTS THAT ARE NOT CONSTRUCTED PER PLAN.

SCALE: 1"=10'
0 10 20 30

Know what's below. Call before you dig.

N:\projects\0896\engineering\acad\improvements\alternative 7\0896_05-07_grading_alt 7.dwg; Last Saved By: cbak - Jul 11, 2025 - 2:15pm Last Printed By: CBAK - Jul 17, 2025, 10:10am;

AGENCY

FLEWELLING & MOODY
architecture planning interiors

HEADQUARTERS OFFICE:
99 S. Lake Ave., Suite 300
Pasadena, CA 91101
323.543.8300
E-Mail: fm-pasadena@flewelling-moody.com

ANTELOPE VALLEY OFFICE:
1035 West Lancaster Boulevard
Lancaster, California 93534
661.949.0771
E-Mail: fm-lancaster@flewelling-moody.com

An Employee Owned Corporation

ARCHITECT

CONSULTANT

REGISTERED PROFESSIONAL ENGINEER
JOSIAH D. JENSEN
NO 77454
CIVIL
STATE OF CALIFORNIA

ECG
Encompass Consultant Group
25115 AVE STANFORD, SUITE A330, SANTA CLARITA, CA 91355
PHONE: 661.609.9367 WEBSITE: WWW.ECGCIVIL.COM

Drawn by

Checked by

Revisions

No.	Date	Description
1	08/27/2025	BID ALTERNATIVE

All dimensions must be checked at the job by the contractor who accepts full responsibility for their accuracy under the contract. These plans & the specifications in connection therewith have been prepared for a specific site. Any and all responsibility for their use in whole or in part on any other site is hereby disclaimed by Flewelling & Moody.

CITY OF RIDGECREST

SGT. JOHN PINNEY MEMORIAL POOL REPLACEMENT

205 S WARNER ST.
RIDGECREST, CA 93555

GRADING AND PAVING PLAN ALT 7

Job No. 3055-0100

Date 06/25/2025

C3.02A7

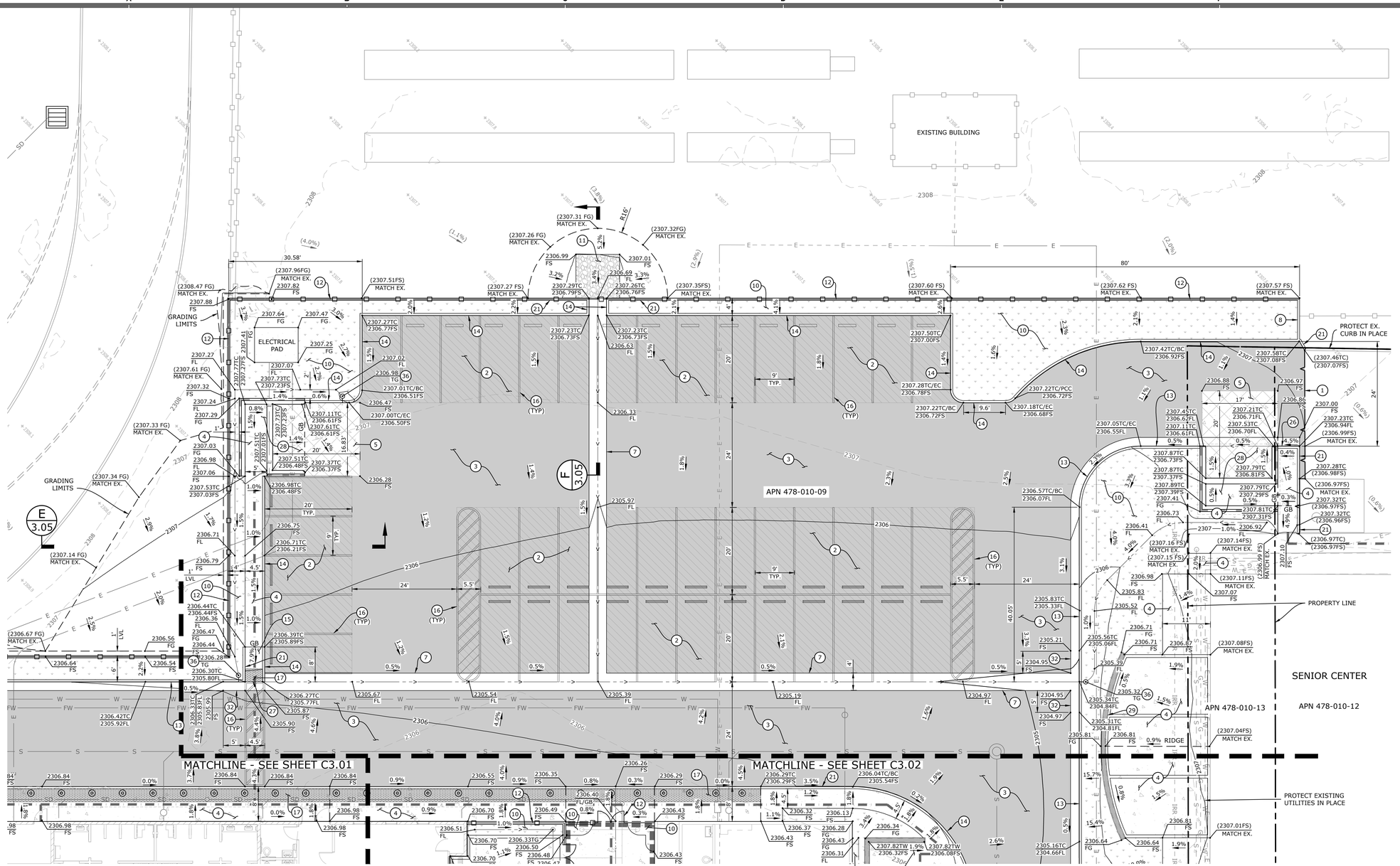

GRADING AND DRAINAGE CONSTRUCTION NOTES

1. SAWCUT PCC OR AC PAVEMENT TO LIMITS SHOWN.
2. CONSTRUCT PARKING STALL ASPHALT CONCRETE PAVEMENT PER DETAIL "A" ON SHEET C3.06.
3. CONSTRUCT DRIVE AISLE ASPHALT CONCRETE PAVEMENT PER DETAIL "B" ON SHEET C3.06.
4. CONSTRUCT PCC PEDESTRIAN PAVEMENT PER DETAIL "C" ON SHEET C3.06.
5. CONSTRUCT PCC VEHICULAR PAVEMENT PER DETAIL "D" ON SHEET C3.06.
6. CONSTRUCT AC AND BASE TO MATCH EXISTING STREET SECTION THICKNESSES.
7. CONSTRUCT 4' WIDE CONCRETE RIBBON GUTTER PER DETAIL "I" ON SHEET C3.06.
8. CONSTRUCT 0" CONCRETE HEADER PER LANDSCAPE ARCHITECT'S PLAN.
9. CONSTRUCT CONCRETE DRIVEWAY MODIFIED PER SPPWC STD PLAN 110-2, TYPE C ON SHEET C3.07.
10. CONSTRUCT LANDSCAPING PER LANDSCAPE ARCHITECT'S PLAN.
11. CONSTRUCT 10'x10' GROUTED RIP RAP PAD PER DETAIL "J" ON SHEET C3.06.
12. CONSTRUCT FENCE/GATE PER ARCHITECT'S PLAN.
13. CONSTRUCT 6" CURB AND 24" GUTTER PER CITY OF RIDGECREST STD PLATE ST-7, TYPE B ON SHEET C3.07.
14. CONSTRUCT 6" CURB PER SPPWC STD PLAN 120-3, TYPE A1-6(150) ON SHEET C3.07.
15. CONSTRUCT ADA RAMP, WALLS/CURBS AND HANDRAILS PER ARCHITECTURAL PLAN.
16. CONSTRUCT STRIPING PER ARCHITECTURAL PLANS.
17. CONSTRUCT TRUNCATED DOMES PER ARCHITECTURAL PLAN.
18. CONSTRUCT FENCE ON TOP OF WALL PER ARCHITECTURAL PLAN.
19. CONSTRUCT 4" CURB SPPWC STD PLAN 120-3, TYPE A1-6(150) ON SHEET C3.07 AND MODIFIED PER PLAN.
20. CONSTRUCT SCREEN WALL PER ARCHITECT'S PLANS.
21. CONSTRUCT VARIABLE HEIGHT CURB PER PLAN.
22. CONSTRUCT CONCRETE FLUME WITH GRATED COVER PER DETAIL "H" ON SHEET C3.06.
23. CONSTRUCT PCC PEDESTRIAN WALKWAY PER CITY OF RIDGECREST STD PLATE ST-8, TYPE II ON SHEET C3.07.
24. CONSTRUCT SOD TURF PER LANDSCAPE ARCHITECT'S PLAN.
25. CONSTRUCT STAIRS PER ARCHITECT'S PLAN.
26. CONSTRUCT VARIABLE HEIGHT CURB AND 24" GUTTER MODIFIED PER CITY OF RIDGECREST STD. PLATE ST-7, TYPE B ON SHEET C3.07.
27. CONSTRUCT 0" CURB AND MODIFIED PER SPPWC STD. PLAN 120-3, TYPE A1-6(150) ON SHEET C3.07.
28. CONSTRUCT TRASH ENCLOSURE PER ARCHITECT'S PLAN.
29. CONSTRUCT SEAT WALL PER LANDSCAPE ARCHITECT'S PLAN.
30. CONSTRUCT RETAINING CURB PER ARCHITECT'S PLAN.
31. CONSTRUCT PARKWAY DRAIN PER SPPWC STD. PLAN 151-3 ON SHEET C3.07, MODIFIED PER PLAN. INLET TYPE 1. "S" PER PLAN. CONSTRUCT CONNECTION TO ONSITE STORM DRAIN PER WET UTILITY PLAN.
32. CONSTRUCT GUTTER TRANSITION AS SHOWN. SEE PLAN FOR GUTTER LIP ELEVATIONS.
33. CONSTRUCT ACCESSIBLE PARKING SIGN PER ARCHITECTURAL SHEET A1.10, DETAIL 10.
34. CONSTRUCT VAN ACCESSIBLE PARKING SIGN PER ARCHITECTURAL SHEET A1.10, DETAIL 11.
35. CONSTRUCT BOLLARD PER ARCHITECTURAL SITE PLAN SHEET A1.01 AND SHEET A1.10, DETAIL 12.
36. CONSTRUCT 6" DIA. NDS SPEE-D CATCH BASIN WITH ATRIUM GRATE AND OUTLET 3" DIA. PIPE THROUGH CURB FACE AS SHOWN.

REVIEWED FOR CODE COMPLIANCE BY:
WILLDAN ENGINEERING

Approval of these plans & specifications shall not be construed to be a permit for, or an approval of any violation of any Federal, State, County or City laws or ordinances. One set of approved plans must be kept on the job until completion.

12:12:29 PM Jul 20, 2025

LEGEND

- PROPOSED PC CONCRETE - PEDESTRIAN
- PROPOSED PC CONCRETE - VEHICULAR
- PROPOSED ASPHALT CONCRETE - PARKING STALLS
- PROPOSED ASPHALT CONCRETE - DRIVE AISLE
- PROPOSED LANDSCAPING PER LANDSCAPE ARCHITECT'S PLAN
- PROPOSED SOD TURF PER LANDSCAPE ARCHITECT'S PLAN
- PROPOSED SAWCUT
- PROPOSED FENCE
- EXISTING FENCE
- RIGHT OF WAY/PROPERTY LINE
- GB — GRADE BREAK
- 2344 — EXISTING MINOR CONTOURS
- 2345 — EXISTING MAJOR CONTOURS
- 2344 — PROPOSED MINOR CONTOURS
- 2345 — PROPOSED MAJOR CONTOURS
- PROPOSED FLOWLINE
- SD — PROPOSED STORM DRAIN
- FW — PROPOSED FIRE WATER
- W — PROPOSED WATER LINE
- S — PROPOSED SEWER LINE
- EXISTING STREET CENTERLINE
- STORM DRAIN INLET
- OHW — EXISTING OVER HEAD WIRE
- E — EXISTING ELECTRICAL LINE
- G — EXISTING GAS LINE
- W — EXISTING WATER LINE
- SD — EXISTING STORM DRAIN LINE
- FW — EXISTING FIREWATER LINE
- S — EXISTING SEWER LINE
- COMM — EXISTING COMMUNICATION LINE
- 2410.00 FS — PROPOSED ELEVATION
- (2410.00) EG — EXISTING ELEVATION
- 1.5% — PROPOSED GRADE
- PATH OF TRAVEL

GENERAL NOTES

1. CONTRACTOR SHALL ADJUST ALL EXISTING UTILITY PULL BOXS, CLEANOUTS, VAULTS AND OTHER SURFACE LIDS/COVERS WITHIN THE PROJECT AREA TO FINISH SURFACE ELEVATION AS NECESSARY.
2. ALL GRADING AND IMPROVEMENTS SHALL BE CONSTRUCTED AS NOTED ON PLANS. CONTRACTOR IS RESPONSIBLE FOR CORRECTING ANY GRADING OR IMPROVEMENTS THAT ARE NOT CONSTRUCTED PER PLAN.

SCALE: 1"=10'
0 10 20 30

Know what's below. Call before you dig.

AGENCY

FLEWELLING & MOODY
architecture planning interiors

HEADQUARTERS OFFICE:
99 S. Lake Ave., Suite 300
Pasadena, CA 91101
323.543.8300
E-Mail: fm-pasadena@flewelling-moody.com

ANTELOPE VALLEY OFFICE:
1035 West Lancaster Boulevard
Lancaster, California 93534
661.949.0771
E-Mail: fm-lancaster@flewelling-moody.com

An Employee Owned Corporation

ARCHITECT

CONSULTANT

REGISTERED PROFESSIONAL ENGINEER
JOSIAH D. JENISON
NO 77454
CIVIL
STATE OF CALIFORNIA

ECG
Encompass Consultant Group
25115 AVE STANFORD, SUITE #220, SANTA CLARITA, CA 91355
PHONE: 661.600.9367 WEBSITE: WWW.ECGCIVIL.COM

Drawn by

Checked by

Revisions

No.	Date	Description

All dimensions must be checked at the job by the contractor who accepts full responsibility for their accuracy under the contract. These plans & the specifications in connection therewith have been prepared for a specific site. Any and all responsibility for their use in whole or in part on any other site is hereby disclaimed by Flewelling & Moody.

CITY OF RIDGECREST

SGT. JOHN PINNEY MEMORIAL POOL REPLACEMENT

205 S WARNER ST.
RIDGECREST, CA 93555

GRADING AND PAVING PLAN

Job No. 3055-0100

Date 05/02/2025

C3.03

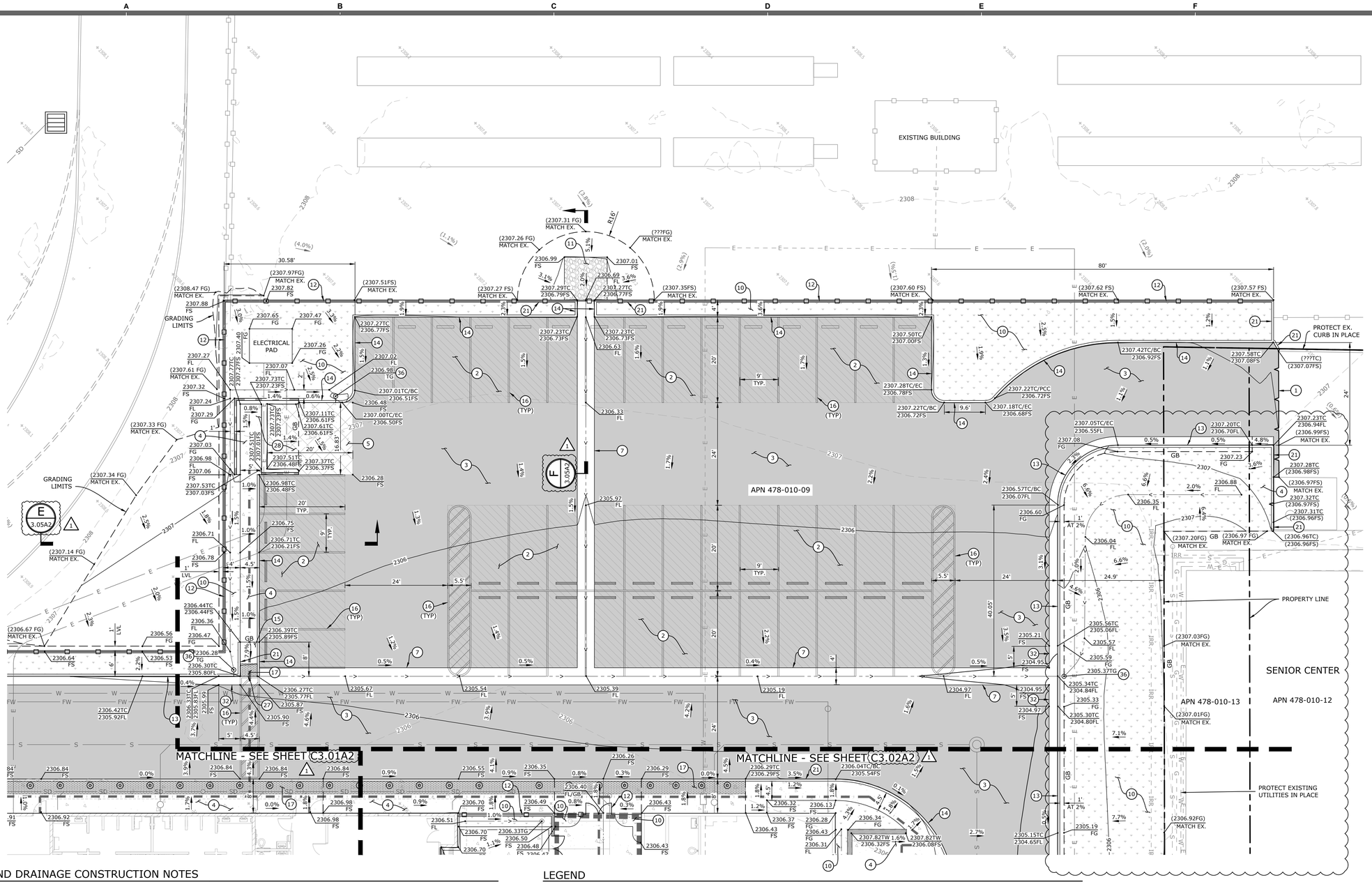

GRADING AND DRAINAGE CONSTRUCTION NOTES

1. SAWCUT PCC OR AC PAVEMENT TO LIMITS SHOWN.
2. CONSTRUCT PARKING STALL ASPHALT CONCRETE PAVEMENT PER DETAIL "A" ON SHEET C3.06.
3. CONSTRUCT DRIVE AISLE ASPHALT CONCRETE PAVEMENT PER DETAIL "B" ON SHEET C3.06.
4. CONSTRUCT PCC PEDESTRIAN PAVEMENT PER DETAIL "C" ON SHEET C3.06.
5. CONSTRUCT PCC VEHICULAR PAVEMENT PER DETAIL "D" ON SHEET C3.06.
6. CONSTRUCT AC AND BASE TO MATCH EXISTING STREET SECTION THICKNESSES.
7. CONSTRUCT 4' WIDE CONCRETE RIBBON GUTTER PER DETAIL "I" ON SHEET C3.06.
8. CONSTRUCT 0" CONCRETE HEADER PER LANDSCAPE ARCHITECT'S PLAN.
9. CONSTRUCT CONCRETE DRIVEWAY MODIFIED PER SPPWC STD PLAN 110-2, TYPE C ON SHEET C3.07.
10. CONSTRUCT LANDSCAPING PER LANDSCAPE ARCHITECT'S PLAN.
11. CONSTRUCT 10'x10' GROUTED RIP RAP PAD PER DETAIL "J" ON SHEET C3.06.
12. CONSTRUCT FENCE/GATE PER ARCHITECT'S PLAN.
13. CONSTRUCT 6" CURB AND 24" GUTTER PER CITY OF RIDGECREST STD PLATE ST-7, TYPE B ON SHEET C3.07.
14. CONSTRUCT 6" CURB PER SPPWC STD PLAN 120-3, TYPE A1-6(150) ON SHEET C3.07.
15. CONSTRUCT ADA RAMP, WALLS/CURBS AND HANDRAILS PER ARCHITECTURAL PLAN.
16. CONSTRUCT STRIPING PER ARCHITECTURAL PLANS.
17. CONSTRUCT TRUNCATED DOMES PER ARCHITECTURAL PLAN.
18. CONSTRUCT FENCE ON TOP OF WALL PER ARCHITECTURAL PLAN.
19. CONSTRUCT 4" CURB SPPWC STD PLAN 120-3, TYPE A1-6(150) ON SHEET C3.07 AND MODIFIED PER PLAN.
20. CONSTRUCT SCREEN WALL PER ARCHITECT'S PLANS.
21. CONSTRUCT VARIABLE HEIGHT CURB PER PLAN.
22. CONSTRUCT CONCRETE FLUME WITH GRATED COVER PER DETAIL "H" ON SHEET C3.06.
23. CONSTRUCT PCC PEDESTRIAN WALKWAY PER CITY OF RIDGECREST STD PLATE ST-8, TYPE II ON SHEET C3.07.
24. CONSTRUCT SOD TURF PER LANDSCAPE ARCHITECT'S PLAN.
25. CONSTRUCT STAIRS PER ARCHITECT'S PLAN.
26. CONSTRUCT VARIABLE HEIGHT CURB AND 24" GUTTER MODIFIED PER CITY OF RIDGECREST STD. PLATE ST-7, TYPE B ON SHEET C3.07.
27. CONSTRUCT 0" CURB AND MODIFIED PER SPPWC STD. PLAN 120-3, TYPE A1-6(150) ON SHEET C3.07.
28. CONSTRUCT TRASH ENCLOSURE PER ARCHITECT'S PLAN.
29. CONSTRUCT SEAT WALL PER LANDSCAPE ARCHITECT'S PLAN.
30. CONSTRUCT RETAINING CURB PER ARCHITECT'S PLAN.
31. CONSTRUCT PARKWAY DRAIN PER SPPWC STD. PLAN 151-3 ON SHEET C3.07, MODIFIED PER PLAN. INLET TYPE 1. "S" PER PLAN. CONSTRUCT CONNECTION TO ONSITE STORM DRAIN PER WET UTILITY PLAN.
32. CONSTRUCT GUTTER TRANSITION AS SHOWN. SEE PLAN FOR GUTTER LIP ELEVATIONS.
33. CONSTRUCT ACCESSIBLE PARKING SIGN PER ARCHITECTURAL SHEET A1.10, DETAIL 10.
34. CONSTRUCT VAN ACCESSIBLE PARKING SIGN PER ARCHITECTURAL SHEET A1.10, DETAIL 11.
35. CONSTRUCT BOLLARD PER ARCHITECTURAL SITE PLAN SHEET A1.01 AND SHEET A1.10, DETAIL 12.
36. CONSTRUCT 6" DIA. NDS SPEE-D CATCH BASIN WITH ATRIUM GRATE AND OUTLET 3" DIA. PIPE THROUGH CURB FACE AS SHOWN.

LEGEND

- PROPOSED PC CONCRETE - PEDESTRIAN
- PROPOSED PC CONCRETE - VEHICULAR
- PROPOSED ASPHALT CONCRETE - PARKING STALLS
- PROPOSED ASPHALT CONCRETE - DRIVE AISLE
- PROPOSED LANDSCAPING PER LANDSCAPE ARCHITECT'S PLAN
- PROPOSED SOD TURF PER LANDSCAPE ARCHITECT'S PLAN
- PROPOSED SAWCUT
- PROPOSED FENCE
- EXISTING FENCE
- RIGHT OF WAY/PROPERTY LINE
- GRADE BREAK
- EXISTING MINOR CONTOURS
- EXISTING MAJOR CONTOURS
- PROPOSED MINOR CONTOURS
- PROPOSED MAJOR CONTOURS
- PROPOSED FLOWLINE
- PROPOSED STORM DRAIN
- PROPOSED FIRE WATER
- PROPOSED WATER LINE
- PROPOSED SEWER LINE

- EXISTING STREET CENTERLINE
- STORM DRAIN INLET
- EXISTING OVER HEAD WIRE
- EXISTING ELECTRICAL LINE
- EXISTING GAS LINE
- EXISTING WATER LINE
- EXISTING STORM DRAIN LINE
- EXISTING FIREWATER LINE
- EXISTING SEWER LINE
- EXISTING COMMUNICATION LINE
- PROPOSED ELEVATION
- EXISTING ELEVATION
- PROPOSED GRADE
- PATH OF TRAVEL

GENERAL NOTES

1. CONTRACTOR SHALL ADJUST ALL EXISTING UTILITY PULL BOXS, CLEANOUTS, VAULTS AND OTHER SURFACE LIDS/COVERS WITHIN THE PROJECT AREA TO FINISH SURFACE ELEVATION AS NECESSARY.
2. ALL GRADING AND IMPROVEMENTS SHALL BE CONSTRUCTED AS NOTED ON PLANS. CONTRACTOR IS RESPONSIBLE FOR CORRECTING ANY GRADING OR IMPROVEMENTS THAT ARE NOT CONSTRUCTED PER PLAN.

SCALE: 1"=10'
0 10 20 30

Know what's below. Call before you dig.

N:\projects\0896\engineering\acad\improvements\alternative 2\0896_05-07_grading_alt 2.dwg; Last Saved By: cbak - Jul 11, 2025 - 11:03am Last Printed By: CBAK - Jul 17, 2025, 9:20am;

AGENCY

FLEWELLING & MOODY
architecture planning interiors

HEADQUARTERS OFFICE:
99 S. Lake Ave., Suite 300
Pasadena, CA 91101
323.543.8300
E-Mail: fm-pasadena@flewelling-moody.com

ANTELOPE VALLEY OFFICE:
1035 West Lancaster Boulevard
Lancaster, California 93534
661.949.0771
E-Mail: fm-lancaster@flewelling-moody.com

An Employee Owned Corporation

ARCHITECT

CONSULTANT

REGISTERED PROFESSIONAL ENGINEER JOSIAH D. JENSON NO 77454 CIVIL STATE OF CALIFORNIA

ECG Encompass Consultant Group
25115 AVE STANFORD, SUITE A330, SANTA CLARITA, CA 91355
PHONE: 661.600.9367 WEBSITE: WWW.ECGCIVIL.COM

Drawn by

Checked by

Revisions

No.	Date	Description
1	08/27/2025	BID ALTERNATIVE

All dimensions must be checked at the job by the contractor who accepts full responsibility for their accuracy under the contract. These plans & the specifications in connection therewith have been prepared for a specific site. Any and all responsibility for their use in whole or in part on any other site is hereby disclaimed by Flewelling & Moody.

CITY OF RIDGECREST

SGT. JOHN PINNEY MEMORIAL POOL REPLACEMENT

205 S WARNER ST.
RIDGECREST, CA 93555

GRADING AND PAVING PLAN ALT 2

Job No. 3055-0100

Date 06/25/2025

C3.03A2

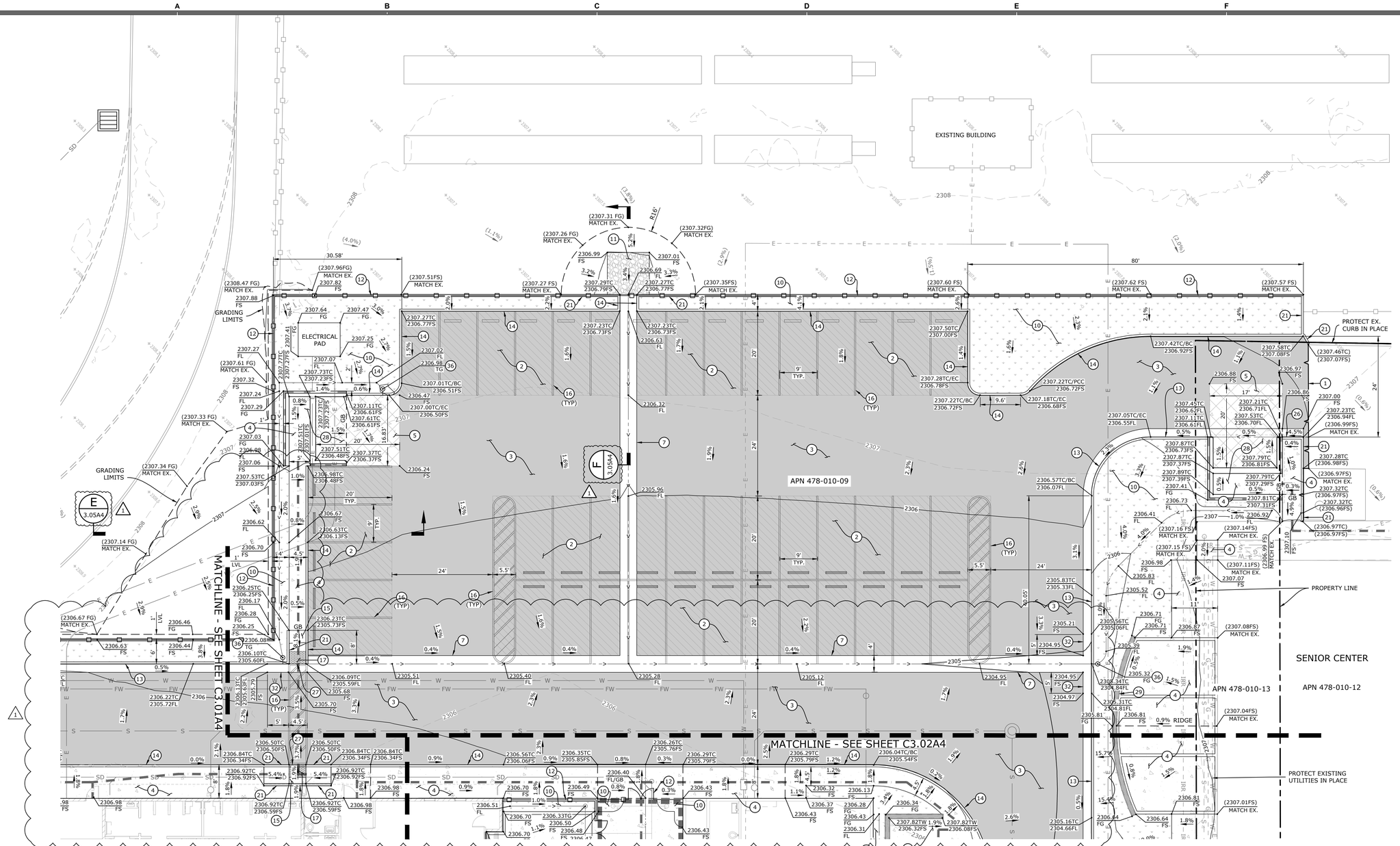

GRADING AND DRAINAGE CONSTRUCTION NOTES

1. SAWCUT PCC OR AC PAVEMENT TO LIMITS SHOWN.
2. CONSTRUCT PARKING STALL ASPHALT CONCRETE PAVEMENT PER DETAIL "A" ON SHEET C3.06.
3. CONSTRUCT DRIVE AISLE ASPHALT CONCRETE PAVEMENT PER DETAIL "B" ON SHEET C3.06.
4. CONSTRUCT PCC PEDESTRIAN PAVEMENT PER DETAIL "C" ON SHEET C3.06.
5. CONSTRUCT PCC VEHICULAR PAVEMENT PER DETAIL "D" ON SHEET C3.06.
6. CONSTRUCT AC AND BASE TO MATCH EXISTING STREET SECTION THICKNESSES.
7. CONSTRUCT 4' WIDE CONCRETE RIBBON GUTTER PER DETAIL "I" ON SHEET C3.06.
8. CONSTRUCT 0" CONCRETE HEADER PER LANDSCAPE ARCHITECT'S PLAN.
9. CONSTRUCT CONCRETE DRIVEWAY MODIFIED PER SPPWC STD PLAN 110-2, TYPE C ON SHEET C3.07.
10. CONSTRUCT LANDSCAPING PER LANDSCAPE ARCHITECT'S PLAN.
11. CONSTRUCT 10'x10' GROUTED RIP RAP PAD PER DETAIL "J" ON SHEET C3.06.
12. CONSTRUCT FENCE/GATE PER ARCHITECT'S PLAN.
13. CONSTRUCT 6" CURB AND 24" GUTTER PER CITY OF RIDGECREST STD PLATE ST-7, TYPE B ON SHEET C3.07.
14. CONSTRUCT 6" CURB PER SPPWC STD PLAN 120-3, TYPE A1-6(150) ON SHEET C3.07.
15. CONSTRUCT ADA RAMP, WALLS/CURBS AND HANDRAILS PER ARCHITECTURAL PLAN.
16. CONSTRUCT STRIPING PER ARCHITECTURAL PLANS.
17. CONSTRUCT TRUNCATED DOMES PER ARCHITECTURAL PLAN.
18. CONSTRUCT FENCE ON TOP OF WALL PER ARCHITECTURAL PLAN.
19. CONSTRUCT 4" CURB SPPWC STD PLAN 120-3, TYPE A1-6(150) ON SHEET C3.07 AND MODIFIED PER PLAN.
20. CONSTRUCT SCREEN WALL PER ARCHITECT'S PLANS.
21. CONSTRUCT VARIABLE HEIGHT CURB PER PLAN.
22. CONSTRUCT CONCRETE FLUME WITH GRATED COVER PER DETAIL "H" ON SHEET C3.06.
23. CONSTRUCT PCC PEDESTRIAN WALKWAY PER CITY OF RIDGECREST STD PLATE ST-8, TYPE II ON SHEET C3.07.
24. CONSTRUCT SOD TURF PER LANDSCAPE ARCHITECT'S PLAN.
25. CONSTRUCT STAIRS PER ARCHITECT'S PLAN.
26. CONSTRUCT VARIABLE HEIGHT CURB AND 24" GUTTER MODIFIED PER CITY OF RIDGECREST STD. PLATE ST-7, TYPE B ON SHEET C3.07.
27. CONSTRUCT 0" CURB AND MODIFIED PER SPPWC STD. PLAN 120-3, TYPE A1-6(150) ON SHEET C3.07.
28. CONSTRUCT TRASH ENCLOSURE PER ARCHITECT'S PLAN.
29. CONSTRUCT SEAT WALL PER LANDSCAPE ARCHITECT'S PLAN.
30. CONSTRUCT RETAINING CURB PER ARCHITECT'S PLAN.
31. CONSTRUCT PARKWAY DRAIN PER SPPWC STD. PLAN 151-3 ON SHEET C3.07, MODIFIED PER PLAN. INLET TYPE 1. "S" PER PLAN. CONSTRUCT CONNECTION TO ONSITE STORM DRAIN PER WET UTILITY PLAN.
32. CONSTRUCT GUTTER TRANSITION AS SHOWN. SEE PLAN FOR GUTTER LIP ELEVATIONS.
33. CONSTRUCT ACCESSIBLE PARKING SIGN PER ARCHITECTURAL SHEET A1.10, DETAIL 10.
34. CONSTRUCT VAN ACCESSIBLE PARKING SIGN PER ARCHITECTURAL SHEET A1.10, DETAIL 11.
35. CONSTRUCT BOLLARD PER ARCHITECTURAL SITE PLAN SHEET A1.01 AND SHEET A1.10, DETAIL 12.
36. CONSTRUCT 6" DIA. NDS SPEE-D CATCH BASIN WITH ATRIUM GRATE AND OUTLET 3" DIA. PIPE THROUGH CURB FACE AS SHOWN.

LEGEND

- PROPOSED PC CONCRETE - PEDESTRIAN
- PROPOSED PC CONCRETE - VEHICULAR
- PROPOSED ASPHALT CONCRETE - PARKING STALLS
- PROPOSED ASPHALT CONCRETE - DRIVE AISLE
- PROPOSED LANDSCAPING PER LANDSCAPE ARCHITECT'S PLAN
- PROPOSED SOD TURF PER LANDSCAPE ARCHITECT'S PLAN
- PROPOSED SAWCUT
- PROPOSED FENCE
- EXISTING FENCE
- RIGHT OF WAY/PROPERTY LINE
- GRADE BREAK (GB)
- EXISTING MINOR CONTOURS (2344)
- EXISTING MAJOR CONTOURS (2345)
- PROPOSED MINOR CONTOURS (2344)
- PROPOSED MAJOR CONTOURS (2345)
- PROPOSED FLOWLINE
- PROPOSED STORM DRAIN (SD)
- PROPOSED FIRE WATER (FW)
- PROPOSED WATER LINE (W)
- PROPOSED SEWER LINE (S)
- EXISTING STREET CENTERLINE
- STORM DRAIN INLET
- EXISTING OVER HEAD WIRE (OHW)
- EXISTING ELECTRICAL LINE (E)
- EXISTING GAS LINE (G)
- EXISTING WATER LINE (W)
- EXISTING STORM DRAIN LINE (SD)
- EXISTING FIREWATER LINE (FW)
- EXISTING SEWER LINE (S)
- EXISTING COMMUNICATION LINE (COMM)
- PROPOSED ELEVATION (2410.00 FS)
- EXISTING ELEVATION ((2410.00) EG)
- PROPOSED GRADE (1.5%)
- PATH OF TRAVEL

GENERAL NOTES

1. CONTRACTOR SHALL ADJUST ALL EXISTING UTILITY PULL BOXS, CLEANOUTS, VAULTS AND OTHER SURFACE LIDS/COVERS WITHIN THE PROJECT AREA TO FINISH SURFACE ELEVATION AS NECESSARY.
2. ALL GRADING AND IMPROVEMENTS SHALL BE CONSTRUCTED AS NOTED ON PLANS. CONTRACTOR IS RESPONSIBLE FOR CORRECTING ANY GRADING OR IMPROVEMENTS THAT ARE NOT CONSTRUCTED PER PLAN.

SCALE: 1"=10'
0 10 20 30

Know what's below. Call before you dig.

AGENCY

FLEWELLING & MOODY
architecture planning interiors

HEADQUARTERS OFFICE:
99 S. Lake Ave., Suite 300
Pasadena, CA 91101
323.543.8300
E-Mail: fm-pasadena@flewelling-moody.com

ANTELOPE VALLEY OFFICE:
1035 West Lancaster Boulevard
Lancaster, California 93534
661.949.0771
E-Mail: fm-lancaster@flewelling-moody.com

An Employee Owned Corporation

ARCHITECT

CONSULTANT

REGISTERED PROFESSIONAL ENGINEER JOSIAH D. JENSEN NO 77454 CIVIL STATE OF CALIFORNIA

ECG Encompass Consultant Group
25115 AVE STANFORD, SUITE #200, SANTA CLARITA, CA 91355
PHONE: 661.600.9367 WEBSITE: WWW.ECGCIVIL.COM

Drawn by

Checked by

Revisions

No.	Date	Description
1	08/27/2025	BID ALTERNATIVE

All dimensions must be checked at the job by the contractor who accepts full responsibility for their accuracy under the contract. These plans & the specifications in connection therewith have been prepared for a specific site. Any and all responsibility for their use in whole or in part on any other site is hereby disclaimed by Flewelling & Moody.

CITY OF RIDGECREST

SGT. JOHN PINNEY MEMORIAL POOL REPLACEMENT

205 S WARNER ST.
RIDGECREST, CA 93555

GRADING AND PAVING PLAN ALT 4

Job No. 3055-0100

Date 06/25/2025

C3.03A4

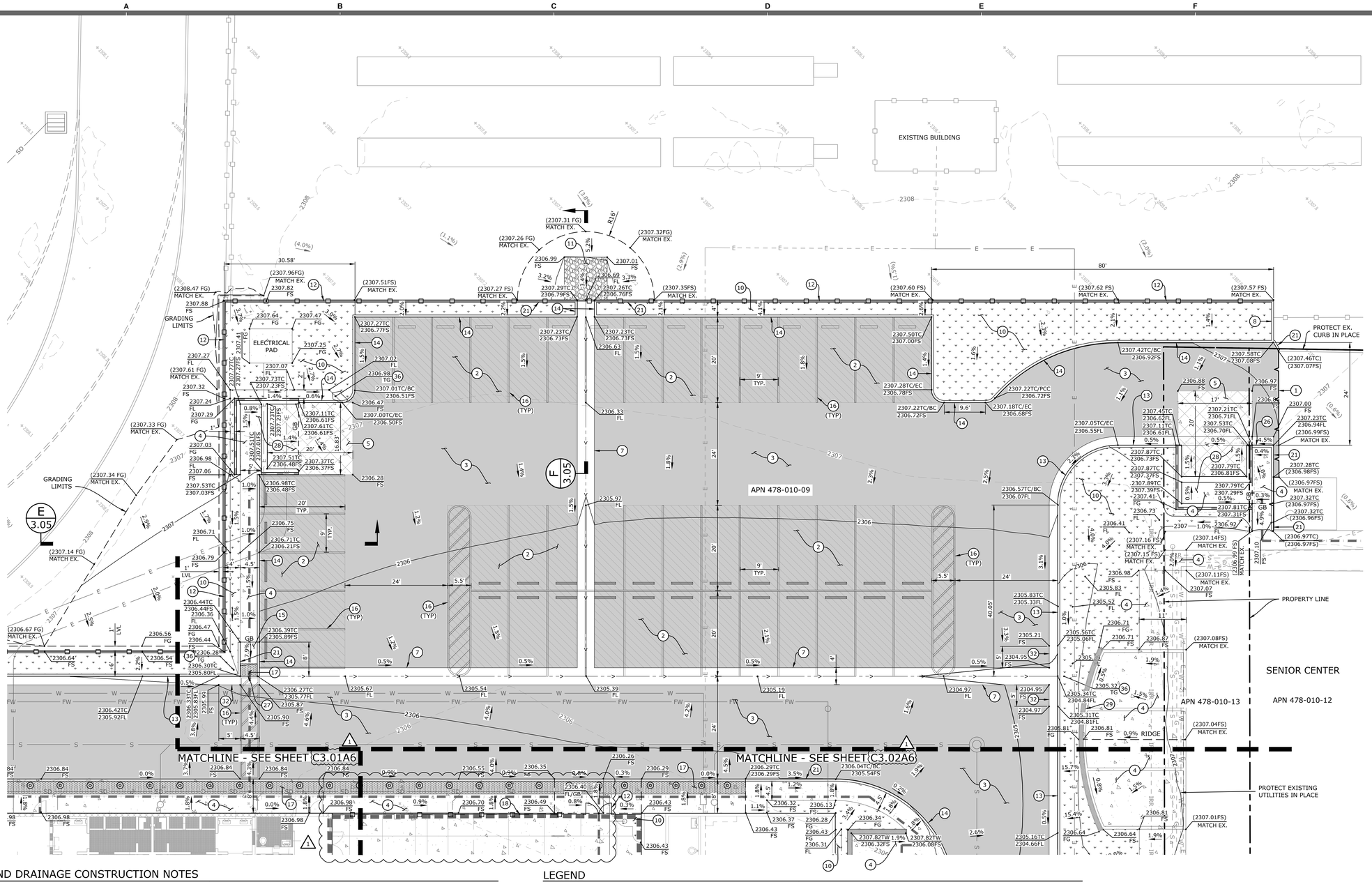

GRADING AND DRAINAGE CONSTRUCTION NOTES

1. SAWCUT PCC OR AC PAVEMENT TO LIMITS SHOWN.
2. CONSTRUCT PARKING STALL ASPHALT CONCRETE PAVEMENT PER DETAIL "A" ON SHEET C3.06.
3. CONSTRUCT DRIVE AISLE ASPHALT CONCRETE PAVEMENT PER DETAIL "B" ON SHEET C3.06.
4. CONSTRUCT PCC PEDESTRIAN PAVEMENT PER DETAIL "C" ON SHEET C3.06.
5. CONSTRUCT PCC VEHICULAR PAVEMENT PER DETAIL "D" ON SHEET C3.06.
6. CONSTRUCT AC AND BASE TO MATCH EXISTING STREET SECTION THICKNESSES.
7. CONSTRUCT 4' WIDE CONCRETE RIBBON GUTTER PER DETAIL "I" ON SHEET C3.06.
8. CONSTRUCT 0" CONCRETE HEADER PER LANDSCAPE ARCHITECT'S PLAN.
9. CONSTRUCT CONCRETE DRIVEWAY MODIFIED PER SPPWC STD PLAN 110-2, TYPE C ON SHEET C3.07.
10. CONSTRUCT LANDSCAPING PER LANDSCAPE ARCHITECT'S PLAN.
11. CONSTRUCT 10'x10' GROUTED RIP RAP PAD PER DETAIL "J" ON SHEET C3.06.
12. CONSTRUCT FENCE/GATE PER ARCHITECT'S PLAN.
13. CONSTRUCT 6" CURB AND 24" GUTTER PER CITY OF RIDGECREST STD PLATE ST-7, TYPE B ON SHEET C3.07.
14. CONSTRUCT 6" CURB PER SPPWC STD PLAN 120-3, TYPE A1-6(150) ON SHEET C3.07.
15. CONSTRUCT ADA RAMP, WALLS/CURBS AND HANDRAILS PER ARCHITECTURAL PLAN.
16. CONSTRUCT STRIPING PER ARCHITECTURAL PLANS.
17. CONSTRUCT TRUNCATED DOMES PER ARCHITECTURAL PLAN.
18. CONSTRUCT FENCE ON TOP OF WALL PER ARCHITECTURAL PLAN.
19. CONSTRUCT 4" CURB SPPWC STD PLAN 120-3, TYPE A1-6(150) ON SHEET C3.07 AND MODIFIED PER PLAN.
20. CONSTRUCT SCREEN WALL PER ARCHITECT'S PLANS.
21. CONSTRUCT VARIABLE HEIGHT CURB PER PLAN.
22. CONSTRUCT CONCRETE FLUME WITH GRATED COVER PER DETAIL "H" ON SHEET C3.06.
23. CONSTRUCT PCC PEDESTRIAN WALKWAY PER CITY OF RIDGECREST STD PLATE ST-8, TYPE II ON SHEET C3.07.
24. CONSTRUCT SOD TURF PER LANDSCAPE ARCHITECT'S PLAN.
25. CONSTRUCT STAIRS PER ARCHITECT'S PLAN.
26. CONSTRUCT VARIABLE HEIGHT CURB AND 24" GUTTER MODIFIED PER CITY OF RIDGECREST STD. PLATE ST-7, TYPE B ON SHEET C3.07.
27. CONSTRUCT 0" CURB AND MODIFIED PER SPPWC STD. PLAN 120-3, TYPE A1-6(150) ON SHEET C3.07.
28. CONSTRUCT TRASH ENCLOSURE PER ARCHITECT'S PLAN.
29. CONSTRUCT SEAT WALL PER LANDSCAPE ARCHITECT'S PLAN.
30. CONSTRUCT RETAINING CURB PER ARCHITECT'S PLAN.
31. CONSTRUCT PARKWAY DRAIN PER SPPWC STD. PLAN 151-3 ON SHEET C3.07, MODIFIED PER PLAN. INLET TYPE 1. "S" PER PLAN. CONSTRUCT CONNECTION TO ONSITE STORM DRAIN PER WET UTILITY PLAN.
32. CONSTRUCT GUTTER TRANSITION AS SHOWN. SEE PLAN FOR GUTTER LIP ELEVATIONS.
33. CONSTRUCT ACCESSIBLE PARKING SIGN PER ARCHITECTURAL SHEET A1.10, DETAIL 10.
34. CONSTRUCT VAN ACCESSIBLE PARKING SIGN PER ARCHITECTURAL SHEET A1.10, DETAIL 11.
35. CONSTRUCT BOLLARD PER ARCHITECTURAL SITE PLAN SHEET A1.01 AND SHEET A1.10, DETAIL 12.
36. CONSTRUCT 6" DIA. NDS SPEE-D CATCH BASIN WITH ATRIUM GRATE AND OUTLET 3" DIA. PIPE THROUGH CURB FACE AS SHOWN.

LEGEND

- PROPOSED PC CONCRETE - PEDESTRIAN
- PROPOSED PC CONCRETE - VEHICULAR
- PROPOSED ASPHALT CONCRETE - PARKING STALLS
- PROPOSED ASPHALT CONCRETE - DRIVE AISLE
- PROPOSED LANDSCAPING PER LANDSCAPE ARCHITECT'S PLAN
- PROPOSED SOD TURF PER LANDSCAPE ARCHITECT'S PLAN
- PROPOSED SAWCUT
- PROPOSED FENCE
- EXISTING FENCE
- RIGHT OF WAY/PROPERTY LINE
- GRADE BREAK
- EXISTING MINOR CONTOURS
- EXISTING MAJOR CONTOURS
- PROPOSED MINOR CONTOURS
- PROPOSED MAJOR CONTOURS
- PROPOSED FLOWLINE
- PROPOSED STORM DRAIN
- PROPOSED FIRE WATER
- PROPOSED WATER LINE
- PROPOSED SEWER LINE
- EXISTING STREET CENTERLINE
- STORM DRAIN INLET
- EXISTING OVER HEAD WIRE
- EXISTING ELECTRICAL LINE
- EXISTING GAS LINE
- EXISTING WATER LINE
- EXISTING STORM DRAIN LINE
- EXISTING FIREWATER LINE
- EXISTING SEWER LINE
- EXISTING COMMUNICATION LINE
- PROPOSED ELEVATION
- EXISTING ELEVATION
- PROPOSED GRADE
- PATH OF TRAVEL

GENERAL NOTES

1. CONTRACTOR SHALL ADJUST ALL EXISTING UTILITY PULL BOXS, CLEANOUTS, VAULTS AND OTHER SURFACE LIDS/COVERS WITHIN THE PROJECT AREA TO FINISH SURFACE ELEVATION AS NECESSARY.
2. ALL GRADING AND IMPROVEMENTS SHALL BE CONSTRUCTED AS NOTED ON PLANS. CONTRACTOR IS RESPONSIBLE FOR CORRECTING ANY GRADING OR IMPROVEMENTS THAT ARE NOT CONSTRUCTED PER PLAN.

SCALE: 1"=10'
0 10 20 30

Know what's below. Call before you dig.

AGENCY

FLEWELLING & MOODY
architecture planning interiors

HEADQUARTERS OFFICE:
99 S. Lake Ave., Suite 300
Pasadena, CA 91101
323.543.8300
E-Mail: fm-pasadena@flewelling-moody.com

ANTELOPE VALLEY OFFICE:
1035 West Lancaster Boulevard
Lancaster, California 93534
661.949.0771
E-Mail: fm-lancaster@flewelling-moody.com

An Employee Owned Corporation

ARCHITECT

CONSULTANT

REGISTERED PROFESSIONAL ENGINEER JOHN D. JENSON NO 77454 CIVIL STATE OF CALIFORNIA

ECG Encompass Consultant Group
25115 AVE STANFORD, SUITE A330, SANTA CLARITA, CA 91355
PHONE: 661.600.9367 WEBSITE: WWW.ECGCIVIL.COM

Drawn by

Checked by

Revisions

No.	Date	Description
1	08/27/2025	BID ALTERNATIVE

All dimensions must be checked at the job by the contractor who accepts full responsibility for their accuracy under the contract. These plans & the specifications in connection therewith have been prepared for a specific site. Any and all responsibility for their use in whole or in part on any other site is hereby disclaimed by Flewelling & Moody.

CITY OF RIDGECREST

SGT. JOHN PINNEY MEMORIAL POOL REPLACEMENT

205 S WARNER ST.
RIDGECREST, CA 93555

GRADING AND PAVING PLAN ALT 6

Job No. 3055-0100

Date 06/25/2025

Sheet C3.03A6

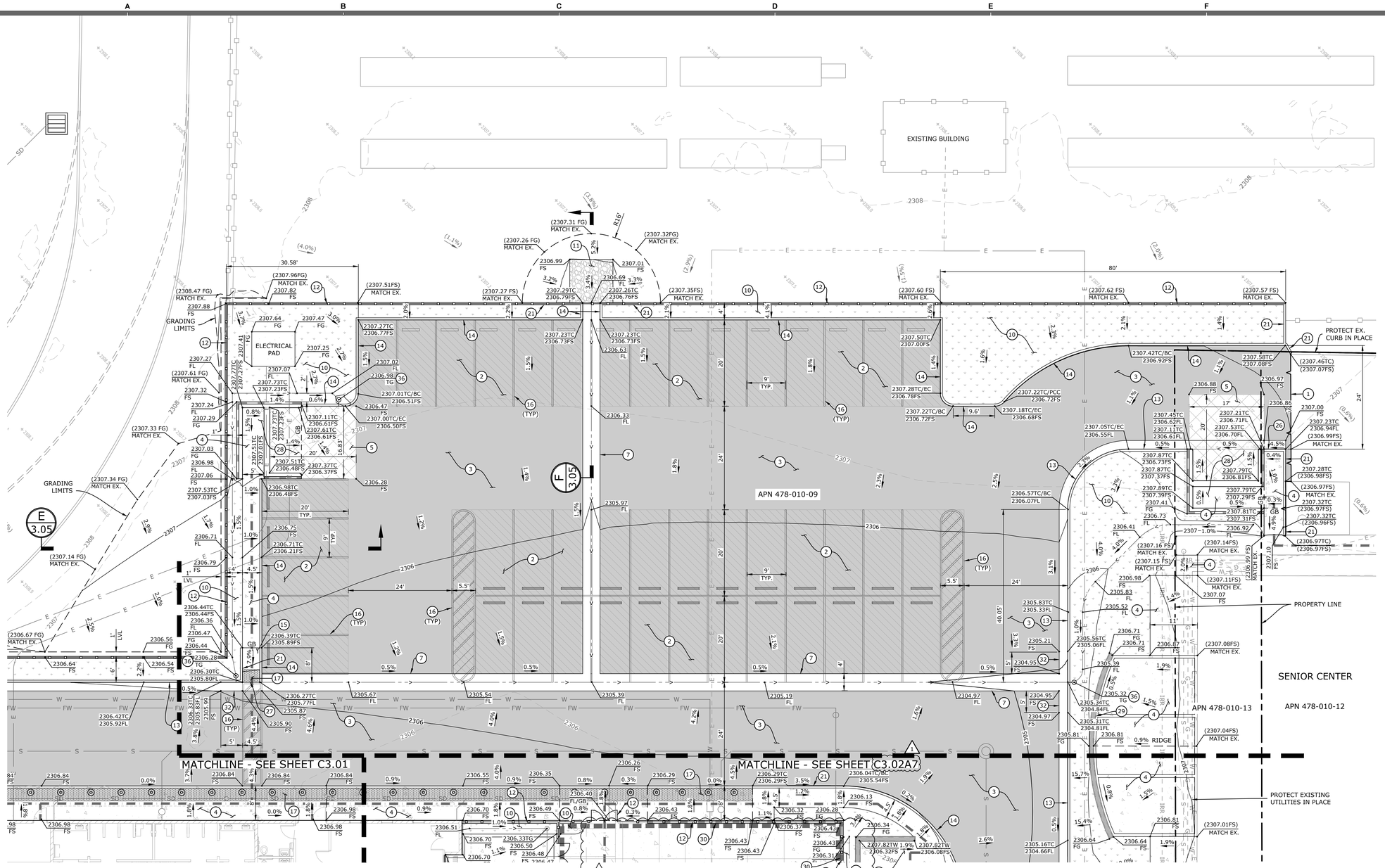

GRADING AND DRAINAGE CONSTRUCTION NOTES

1. SAWCUT PCC OR AC PAVEMENT TO LIMITS SHOWN.
2. CONSTRUCT PARKING STALL ASPHALT CONCRETE PAVEMENT PER DETAIL "A" ON SHEET C3.06.
3. CONSTRUCT DRIVE AISLE ASPHALT CONCRETE PAVEMENT PER DETAIL "B" ON SHEET C3.06.
4. CONSTRUCT PCC PEDESTRIAN PAVEMENT PER DETAIL "C" ON SHEET C3.06.
5. CONSTRUCT PCC VEHICULAR PAVEMENT PER DETAIL "D" ON SHEET C3.06.
6. CONSTRUCT AC AND BASE TO MATCH EXISTING STREET SECTION THICKNESSES.
7. CONSTRUCT 4' WIDE CONCRETE RIBBON GUTTER PER DETAIL "I" ON SHEET C3.06.
8. CONSTRUCT 0" CONCRETE HEADER PER LANDSCAPE ARCHITECT'S PLAN.
9. CONSTRUCT CONCRETE DRIVEWAY MODIFIED PER SPPWC STD PLAN 110-2, TYPE C ON SHEET C3.07.
10. CONSTRUCT LANDSCAPING PER LANDSCAPE ARCHITECT'S PLAN.
11. CONSTRUCT 10'x10' GROUTED RIP RAP PAD PER DETAIL "J" ON SHEET C3.06.
12. CONSTRUCT FENCE/GATE PER ARCHITECT'S PLAN.
13. CONSTRUCT 6" CURB AND 24" GUTTER PER CITY OF RIDGECREST STD PLATE ST-7, TYPE B ON SHEET C3.07.
14. CONSTRUCT 6" CURB PER SPPWC STD PLAN 120-3, TYPE A1-6(150) ON SHEET C3.07.
15. CONSTRUCT ADA RAMP, WALLS/CURBS AND HANDRAILS PER ARCHITECTURAL PLAN.
16. CONSTRUCT STRIPING PER ARCHITECTURAL PLANS.
17. CONSTRUCT TRUNCATED DOMES PER ARCHITECTURAL PLAN.
18. CONSTRUCT FENCE ON TOP OF WALL PER ARCHITECTURAL PLAN.
19. CONSTRUCT 4" CURB SPPWC STD PLAN 120-3, TYPE A1-6(150) ON SHEET C3.07 AND MODIFIED PER PLAN.
20. CONSTRUCT SCREEN WALL PER ARCHITECT'S PLANS.
21. CONSTRUCT VARIABLE HEIGHT CURB PER PLAN.
22. CONSTRUCT CONCRETE FLUME WITH GRATED COVER PER DETAIL "H" ON SHEET C3.06.
23. CONSTRUCT PCC PEDESTRIAN WALKWAY PER CITY OF RIDGECREST STD PLATE ST-8, TYPE II ON SHEET C3.07.
24. CONSTRUCT SOD TURF PER LANDSCAPE ARCHITECT'S PLAN.
25. CONSTRUCT STAIRS PER ARCHITECT'S PLAN.
26. CONSTRUCT VARIABLE HEIGHT CURB AND 24" GUTTER MODIFIED PER CITY OF RIDGECREST STD. PLATE ST-7, TYPE B ON SHEET C3.07.
27. CONSTRUCT 0" CURB AND MODIFIED PER SPPWC STD. PLAN 120-3, TYPE A1-6(150) ON SHEET C3.07.
28. CONSTRUCT TRASH ENCLOSURE PER ARCHITECT'S PLAN.
29. CONSTRUCT SEAT WALL PER LANDSCAPE ARCHITECT'S PLAN.
30. CONSTRUCT RETAINING CURB PER ARCHITECT'S PLAN.
31. CONSTRUCT PARKWAY DRAIN PER SPPWC STD. PLAN 151-3 ON SHEET C3.07, MODIFIED PER PLAN. INLET TYPE 1. "S" PER PLAN. CONSTRUCT CONNECTION TO ONSITE STORM DRAIN PER WET UTILITY PLAN.
32. CONSTRUCT GUTTER TRANSITION AS SHOWN. SEE PLAN FOR GUTTER LIP ELEVATIONS.
33. CONSTRUCT ACCESSIBLE PARKING SIGN PER ARCHITECTURAL SHEET A1.10, DETAIL 10.
34. CONSTRUCT VAN ACCESSIBLE PARKING SIGN PER ARCHITECTURAL SHEET A1.10, DETAIL 11.
35. CONSTRUCT BOLLARD PER ARCHITECTURAL SITE PLAN SHEET A1.01 AND SHEET A1.10, DETAIL 12.
36. CONSTRUCT 6" DIA. NDS SPEE-D CATCH BASIN WITH ATRIUM GRATE AND OUTLET 3" DIA. PIPE THROUGH CURB FACE AS SHOWN.

LEGEND

- PROPOSED PC CONCRETE - PEDESTRIAN
- PROPOSED PC CONCRETE - VEHICULAR
- PROPOSED ASPHALT CONCRETE - PARKING STALLS
- PROPOSED ASPHALT CONCRETE - DRIVE AISLE
- PROPOSED LANDSCAPING PER LANDSCAPE ARCHITECT'S PLAN
- PROPOSED SOD TURF PER LANDSCAPE ARCHITECT'S PLAN
- PROPOSED SAWCUT
- PROPOSED FENCE
- EXISTING FENCE
- RIGHT OF WAY/PROPERTY LINE
- GRADE BREAK
- EXISTING MINOR CONTOURS
- EXISTING MAJOR CONTOURS
- PROPOSED MINOR CONTOURS
- PROPOSED MAJOR CONTOURS
- PROPOSED FLOWLINE
- PROPOSED STORM DRAIN
- PROPOSED FIRE WATER
- PROPOSED WATER LINE
- PROPOSED SEWER LINE
- EXISTING STREET CENTERLINE
- STORM DRAIN INLET
- EXISTING OVER HEAD WIRE
- EXISTING ELECTRICAL LINE
- EXISTING GAS LINE
- EXISTING WATER LINE
- EXISTING STORM DRAIN LINE
- EXISTING FIREWATER LINE
- EXISTING SEWER LINE
- EXISTING COMMUNICATION LINE
- PROPOSED ELEVATION
- EXISTING ELEVATION
- PROPOSED GRADE
- PATH OF TRAVEL

GENERAL NOTES

1. CONTRACTOR SHALL ADJUST ALL EXISTING UTILITY PULL BOXS, CLEANOUTS, VAULTS AND OTHER SURFACE LIDS/COVERS WITHIN THE PROJECT AREA TO FINISH SURFACE ELEVATION AS NECESSARY.
2. ALL GRADING AND IMPROVEMENTS SHALL BE CONSTRUCTED AS NOTED ON PLANS. CONTRACTOR IS RESPONSIBLE FOR CORRECTING ANY GRADING OR IMPROVEMENTS THAT ARE NOT CONSTRUCTED PER PLAN.

SCALE: 1"=10'
0 10 20 30

Know what's below. Call before you dig.

N:\projects\0896\engineering\acad\improvements\alternative 7\0896_05-07_grading_alt 7.dwg; Last Saved By: cbak - Jul 11, 2025 - 2:15pm Last Printed By: CBAK - Jul 17, 2025, 10:08am;

AGENCY

FLEWELLING & MOODY
architecture planning interiors

HEADQUARTERS OFFICE:
99 S. Lake Ave., Suite 300
Pasadena, CA 91101
323.543.8300
E-Mail: fm-pasadena@flewelling-moody.com

ANTELOPE VALLEY OFFICE:
1035 West Lancaster Boulevard
Lancaster, California 93534
661.949.0771
E-Mail: fm-lancaster@flewelling-moody.com

An Employee Owned Corporation

ARCHITECT

CONSULTANT

REGISTERED PROFESSIONAL ENGINEER JOSIAH D. JENSEN NO 77454 CIVIL STATE OF CALIFORNIA

ECG Encompass Consultant Group
25115 AVE STANFORD, SUITE #200, SANTA CLARITA, CA 91355
PHONE: 661.600.9367 WEBSITE: WWW.ECGCIVIL.COM

Drawn by

Checked by

Revisions

No.	Date	Description
1	08/27/2025	BID ALTERNATIVE

All dimensions must be checked at the job by the contractor who accepts full responsibility for their accuracy under the contract. These plans & the specifications in connection therewith have been prepared for a specific site. Any and all responsibility for their use in whole or in part on any other site is hereby disclaimed by Flewelling & Moody.

CITY OF RIDGECREST

SGT. JOHN PINNEY MEMORIAL POOL REPLACEMENT

205 S WARNER ST.
RIDGECREST, CA 93555

GRADING AND PAVING PLAN ALT 7

Job No. 3055-0100

Date 06/25/2025

C3.03A7

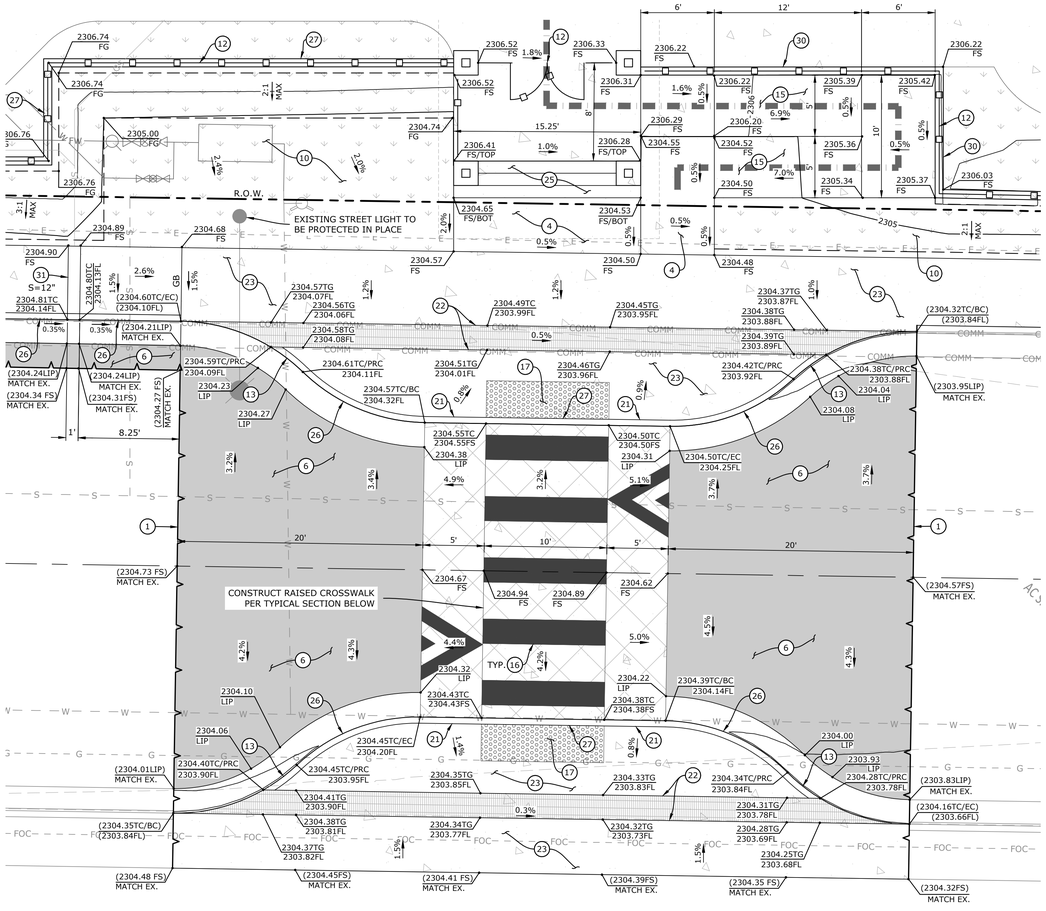

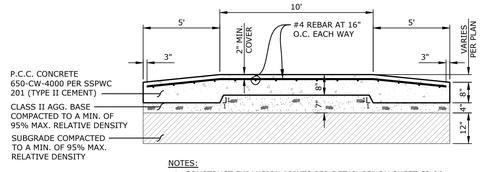

NOTES:
1. CONSTRUCT EXPANSION JOINTS PER DETAIL "G" ON SHEET C3.06.
2. CONSTRUCT CRACK CONTROL JOINTS DETAIL "F" ON SHEET C3.06.

RAISED CROSSWALK TYPICAL SECTION

SCALE: 1"=4' HORIZ.
1"=2' VERT.

ENLARGED DETAIL "A-A"

A-A 3.02

SCALE: 1"=5'

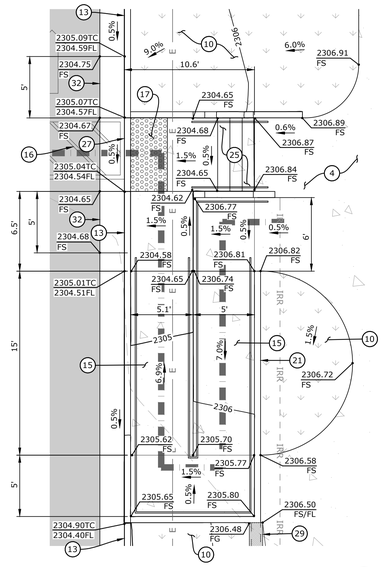

ENLARGED DETAIL "B-B" - ADA ACCESS RAMP

B-B 3.02

SCALE: 1"=5'

GRADING AND DRAINAGE CONSTRUCTION NOTES

1. SAWCUT PCC OR AC PAVEMENT TO LIMITS SHOWN.
2. CONSTRUCT PARKING STALL ASPHALT CONCRETE PAVEMENT PER DETAIL "A" ON SHEET C3.06.
3. CONSTRUCT DRIVE AISLE ASPHALT CONCRETE PAVEMENT PER DETAIL "B" ON SHEET C3.06.
4. CONSTRUCT PCC PEDESTRIAN PAVEMENT PER DETAIL "C" ON SHEET C3.06.
5. CONSTRUCT PCC VEHICULAR PAVEMENT PER DETAIL "D" ON SHEET C3.06.
6. CONSTRUCT AC AND BASE TO MATCH EXISTING STREET SECTION THICKNESSES.
7. CONSTRUCT 4' WIDE CONCRETE RIBBON GUTTER PER DETAIL "I" ON SHEET C3.06.
8. CONSTRUCT 0" CONCRETE HEADER PER LANDSCAPE ARCHITECT'S PLAN.
9. CONSTRUCT CONCRETE DRIVEWAY MODIFIED PER SPPWC STD PLAN 110-2, TYPE C ON SHEET C3.07.
10. CONSTRUCT LANDSCAPING PER LANDSCAPE ARCHITECT'S PLAN.
11. CONSTRUCT 10'x10' GROUTED RIP RAP PAD PER DETAIL "J" ON SHEET C3.06.
12. CONSTRUCT FENCE/GATE PER ARCHITECT'S PLAN.
13. CONSTRUCT 6" CURB AND 24" GUTTER PER CITY OF RIDGECREST STD PLATE ST-7, TYPE B ON SHEET C3.07.
14. CONSTRUCT 6" CURB PER SPPWC STD PLAN 120-3, TYPE A1-6(150) ON SHEET C3.07.
15. CONSTRUCT ADA RAMP, WALLS/CURBS AND HANDRAILS PER ARCHITECTURAL PLAN.
16. CONSTRUCT STRIPING PER ARCHITECTURAL PLANS.
17. CONSTRUCT TRUNCATED DOMES PER ARCHITECTURAL PLAN.
18. CONSTRUCT FENCE ON TOP OF WALL PER ARCHITECTURAL PLAN.
19. CONSTRUCT 4" CURB SPPWC STD PLAN 120-3, TYPE A1-6(150) ON SHEET C3.07 AND MODIFIED PER PLAN.
20. CONSTRUCT SCREEN WALL PER ARCHITECT'S PLANS.
21. CONSTRUCT VARIABLE HEIGHT CURB PER PLAN.
22. CONSTRUCT CONCRETE FLUME WITH GRATED COVER PER DETAIL "H" ON SHEET C3.06.
23. CONSTRUCT PCC PEDESTRIAN WALKWAY PER CITY OF RIDGECREST STD PLATE ST-8, TYPE II ON SHEET C3.07.
24. CONSTRUCT SOD TURF PER LANDSCAPE ARCHITECT'S PLAN.
25. CONSTRUCT STAIRS PER ARCHITECT'S PLAN.
26. CONSTRUCT VARIABLE HEIGHT CURB AND 24" GUTTER MODIFIED PER CITY OF RIDGECREST STD. PLATE ST-7, TYPE B ON SHEET C3.07.
27. CONSTRUCT 0" CURB AND MODIFIED PER SPPWC STD. PLAN 120-3, TYPE A1-6(150) ON SHEET C3.07.
28. CONSTRUCT TRASH ENCLOSURE PER ARCHITECT'S PLAN.
29. CONSTRUCT SEAT WALL PER LANDSCAPE ARCHITECT'S PLAN.
30. CONSTRUCT RETAINING CURB PER ARCHITECT'S PLAN.
31. CONSTRUCT PARKWAY DRAIN PER SPPWC STD. PLAN 151-3 ON SHEET C3.07, MODIFIED PER PLAN. INLET TYPE 1, "S" PER PLAN. CONSTRUCT CONNECTION TO ONSITE STORM DRAIN PER WET UTILITY PLAN.
32. CONSTRUCT GUTTER TRANSITION AS SHOWN. SEE PLAN FOR GUTTER LIP ELEVATIONS.
33. CONSTRUCT ACCESSIBLE PARKING SIGN PER ARCHITECTURAL SHEET A1.10, DETAIL 10.
34. CONSTRUCT VAN ACCESSIBLE PARKING SIGN PER ARCHITECTURAL SHEET A1.10, DETAIL 11.
35. CONSTRUCT BOLLARD PER ARCHITECTURAL SITE PLAN SHEET A1.01 AND SHEET A1.10, DETAIL 12.
36. CONSTRUCT 6" DIA. NDS SPEE-D CATCH BASIN WITH ATRIUM GRATE AND OUTLET 3" DIA. PIPE THROUGH CURB FACE AS SHOWN.

LEGEND

- PROPOSED PC CONCRETE - PEDESTRIAN
- PROPOSED PC CONCRETE - VEHICULAR
- PROPOSED ASPHALT CONCRETE - PARKING STALLS
- PROPOSED ASPHALT CONCRETE - DRIVE AISLE
- PROPOSED LANDSCAPING PER LANDSCAPE ARCHITECT'S PLAN
- PROPOSED SOD TURF PER LANDSCAPE ARCHITECT'S PLAN
- PROPOSED SAWCUT
- PROPOSED FENCE
- EXISTING FENCE
- RIGHT OF WAY/PROPERTY LINE
- GB — GRADE BREAK
- 2344 — EXISTING MINOR CONTOURS
- 2345 — EXISTING MAJOR CONTOURS
- 2344 — PROPOSED MINOR CONTOURS
- 2345 — PROPOSED MAJOR CONTOURS
- PROPOSED FLOWLINE
- SD — PROPOSED STORM DRAIN
- FW — PROPOSED FIRE WATER
- W — PROPOSED WATER LINE
- S — PROPOSED SEWER LINE
- EXISTING STREET CENTERLINE
- STORM DRAIN INLET
- OHW — EXISTING OVER HEAD WIRE
- E — EXISTING ELECTRICAL LINE
- G — EXISTING GAS LINE
- W — EXISTING WATER LINE
- SD — EXISTING STORM DRAIN LINE
- FW — EXISTING FIREWATER LINE
- S — EXISTING SEWER LINE
- COMM — EXISTING COMMUNICATION LINE
- 2410.00 FS — PROPOSED ELEVATION
- (2410.00) EG — EXISTING ELEVATION
- 1.5% — PROPOSED GRADE
- PATH OF TRAVEL

GENERAL NOTES

1. CONTRACTOR SHALL ADJUST ALL EXISTING UTILITY PULL BOXS, CLEANOUTS, VAULTS AND OTHER SURFACE LIDS/COVERS WITHIN THE PROJECT AREA TO FINISH SURFACE ELEVATION AS NECESSARY.

2. ALL GRADING AND IMPROVEMENTS SHALL BE CONSTRUCTED AS NOTED ON PLANS. CONTRACTOR IS RESPONSIBLE FOR CORRECTING ANY GRADING OR IMPROVEMENTS THAT ARE NOT CONSTRUCTED PER PLAN.

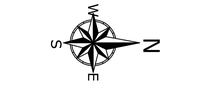

Know what's below. Call before you dig.

REVIEWED FOR CODE COMPLIANCE BY:
WILLDAN ENGINEERING

Approval of these plans & specifications shall not be construed to be a permit for, or an approval of any violation of any Federal, State, County or City laws or ordinances. One set of approved plans must be kept on the job until completion.

12:12:29 PM Jul 20, 2025

AGENCY

FLEWELLING & MOODY
architecture planning interiors

HEADQUARTERS OFFICE:
99 S. Lake Ave., Suite 300
Pasadena, CA 91101
323.543.8300
E-Mail: fm-pasadena@flewelling-moody.com

ANTELOPE VALLEY OFFICE:
1035 West Lancaster Boulevard
Lancaster, California 93534
661.949.0771
E-Mail: fm-lancaster@flewelling-moody.com

An Employee Owned Corporation

ARCHITECT

CONSULTANT

REGISTERED PROFESSIONAL ENGINEER
JOSHUA D. JENISON
NO 77454
CIVIL
STATE OF CALIFORNIA

ECG
Encompass Consultant Group
25115 AVE STANFORD, SUITE A320, SANTA CLARITA, CA 91355
PHONE: 661.600.9367 WEBSITE: WWW.ECGCIVIL.COM

Drawn by

Checked by

Revisions

No.	Date	Description

All dimensions must be checked at the job by the contractor who accepts full responsibility for their accuracy under the contract. These plans & the specifications in connection therewith have been prepared for a specific site. Any and all responsibility for their use in whole or in part on any other site is hereby disclaimed by Flewelling & Moody.

CITY OF RIDGECREST

SGT. JOHN PINNEY MEMORIAL POOL REPLACEMENT

205 S WARNER ST.
RIDGECREST, CA 93555

ENLARGED DETAILS

Job No.
3055-0100

Date
05/02/2025

C3.04

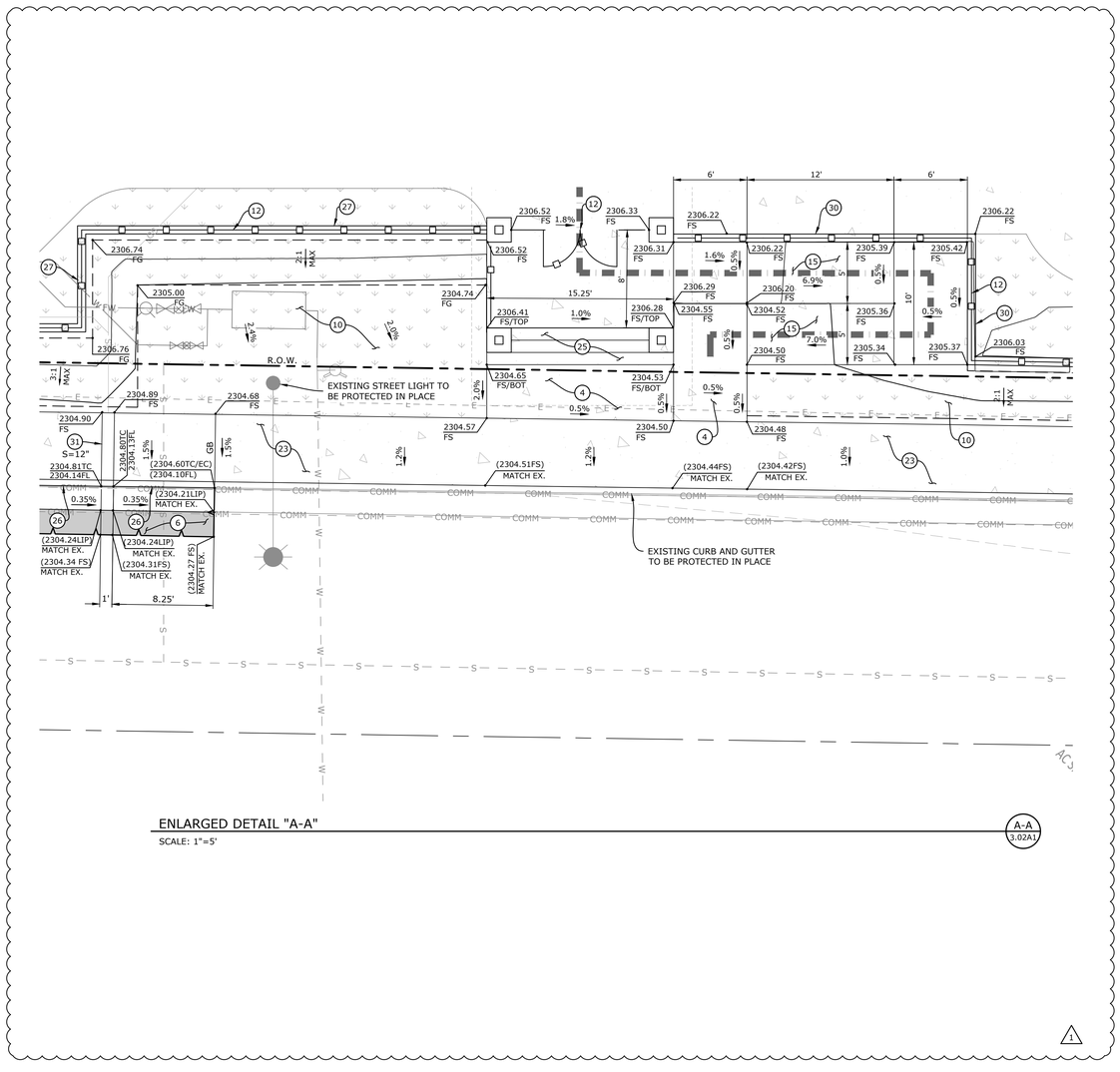

ENLARGED DETAIL "A-A"
SCALE: 1"=5'

A-A
3.02A1

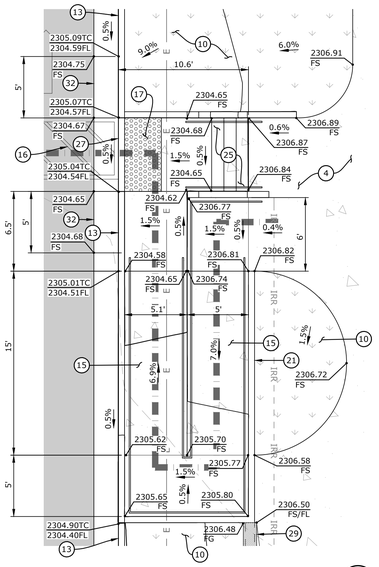

ENLARGED DETAIL "B-B" - ADA ACCESS RAMP
SCALE: 1"=5'

B-B
3.02A1

GRADING AND DRAINAGE CONSTRUCTION NOTES

1. SAWCUT PCC OR AC PAVEMENT TO LIMITS SHOWN.
2. CONSTRUCT PARKING STALL ASPHALT CONCRETE PAVEMENT PER DETAIL "A" ON SHEET C3.06.
3. CONSTRUCT DRIVE AISLE ASPHALT CONCRETE PAVEMENT PER DETAIL "B" ON SHEET C3.06.
4. CONSTRUCT PCC PEDESTRIAN PAVEMENT PER DETAIL "C" ON SHEET C3.06.
5. CONSTRUCT PCC VEHICULAR PAVEMENT PER DETAIL "D" ON SHEET C3.06.
6. CONSTRUCT AC AND BASE TO MATCH EXISTING STREET SECTION THICKNESSES.
7. CONSTRUCT 4' WIDE CONCRETE RIBBON GUTTER PER DETAIL "I" ON SHEET C3.06.
8. CONSTRUCT 0" CONCRETE HEADER PER LANDSCAPE ARCHITECT'S PLAN.
9. CONSTRUCT CONCRETE DRIVEWAY MODIFIED PER SPPWC STD PLAN 110-2, TYPE C ON SHEET C3.07.
10. CONSTRUCT LANDSCAPING PER LANDSCAPE ARCHITECT'S PLAN.
11. CONSTRUCT 10'x10' GROUTED RIP RAP PAD PER DETAIL "J" ON SHEET C3.06.
12. CONSTRUCT FENCE/GATE PER ARCHITECT'S PLAN.
13. CONSTRUCT 6" CURB AND 24" GUTTER PER CITY OF RIDGECREST STD PLATE ST-7, TYPE B ON SHEET C3.07.
14. CONSTRUCT 6" CURB PER SPPWC STD PLAN 120-3, TYPE A1-6(150) ON SHEET C3.07.
15. CONSTRUCT ADA RAMP, WALLS/CURBS AND HANDRAILS PER ARCHITECTURAL PLAN.
16. CONSTRUCT STRIPING PER ARCHITECTURAL PLANS.
17. CONSTRUCT TRUNCATED DOMES PER ARCHITECTURAL PLAN.
18. CONSTRUCT FENCE ON TOP OF WALL PER ARCHITECTURAL PLAN.
19. CONSTRUCT 4" CURB SPPWC STD PLAN 120-3, TYPE A1-6(150) ON SHEET C3.07 AND MODIFIED PER PLAN.
20. CONSTRUCT SCREEN WALL PER ARCHITECT'S PLANS.
21. CONSTRUCT VARIABLE HEIGHT CURB PER PLAN.
22. CONSTRUCT CONCRETE FLUME WITH GRATED COVER PER DETAIL "H" ON SHEET C3.06.
23. CONSTRUCT PCC PEDESTRIAN WALKWAY PER CITY OF RIDGECREST STD PLATE ST-8, TYPE II ON SHEET C3.07.
24. CONSTRUCT SOD TURF PER LANDSCAPE ARCHITECT'S PLAN.
25. CONSTRUCT STAIRS PER ARCHITECT'S PLAN.
26. CONSTRUCT VARIABLE HEIGHT CURB AND 24" GUTTER MODIFIED PER CITY OF RIDGECREST STD. PLATE ST-7, TYPE B ON SHEET C3.07.
27. CONSTRUCT 0" CURB AND MODIFIED PER SPPWC STD. PLAN 120-3, TYPE A1-6(150) ON SHEET C3.07.
28. CONSTRUCT TRASH ENCLOSURE PER ARCHITECT'S PLAN.
29. CONSTRUCT SEAT WALL PER LANDSCAPE ARCHITECT'S PLAN.
30. CONSTRUCT RETAINING CURB PER ARCHITECT'S PLAN.
31. CONSTRUCT PARKWAY DRAIN PER SPPWC STD. PLAN 151-3 ON SHEET C3.07, MODIFIED PER PLAN. INLET TYPE 1. "S" PER PLAN. CONSTRUCT CONNECTION TO ONSITE STORM DRAIN PER WET UTILITY PLAN.
32. CONSTRUCT GUTTER TRANSITION AS SHOWN. SEE PLAN FOR GUTTER LIP ELEVATIONS.
33. CONSTRUCT ACCESSIBLE PARKING SIGN PER ARCHITECTURAL SHEET A1.10, DETAIL 10.
34. CONSTRUCT VAN ACCESSIBLE PARKING SIGN PER ARCHITECTURAL SHEET A1.10, DETAIL 11.
35. CONSTRUCT BOLLARD PER ARCHITECTURAL SITE PLAN SHEET A1.01 AND SHEET A1.10, DETAIL 12.
36. CONSTRUCT 6" DIA. NDS SPEE-D CATCH BASIN WITH ATRIUM GRATE AND OUTLET 3" DIA. PIPE THROUGH CURB FACE AS SHOWN.

LEGEND

- PROPOSED PC CONCRETE - PEDESTRIAN
- PROPOSED PC CONCRETE - VEHICULAR
- PROPOSED ASPHALT CONCRETE - PARKING STALLS
- PROPOSED ASPHALT CONCRETE - DRIVE AISLE
- PROPOSED LANDSCAPING PER LANDSCAPE ARCHITECT'S PLAN
- PROPOSED SOD TURF PER LANDSCAPE ARCHITECT'S PLAN
- PROPOSED SAWCUT
- PROPOSED FENCE
- EXISTING FENCE
- RIGHT OF WAY/PROPERTY LINE
- GB — GRADE BREAK
- 2344 — EXISTING MINOR CONTOURS
- 2345 — EXISTING MAJOR CONTOURS
- 2344 — PROPOSED MINOR CONTOURS
- 2345 — PROPOSED MAJOR CONTOURS
- PROPOSED FLOWLINE
- SD — PROPOSED STORM DRAIN
- FW — PROPOSED FIRE WATER
- W — PROPOSED WATER LINE
- S — PROPOSED SEWER LINE
- EXISTING STREET CENTERLINE
- STORM DRAIN INLET
- OHW — EXISTING OVER HEAD WIRE
- E — EXISTING ELECTRICAL LINE
- G — EXISTING GAS LINE
- W — EXISTING WATER LINE
- SD — EXISTING STORM DRAIN LINE
- FW — EXISTING FIREWATER LINE
- S — EXISTING SEWER LINE
- COMM — EXISTING COMMUNICATION LINE
- 2410.00 FS — PROPOSED ELEVATION
- (2410.00) EG — EXISTING ELEVATION
- 1.5% — PROPOSED GRADE
- PATH OF TRAVEL

GENERAL NOTES

1. CONTRACTOR SHALL ADJUST ALL EXISTING UTILITY PULL BOXES, CLEANOUTS, VAULTS AND OTHER SURFACE LIDS/COVERS WITHIN THE PROJECT AREA TO FINISH SURFACE ELEVATION AS NECESSARY.

2. ALL GRADING AND IMPROVEMENTS SHALL BE CONSTRUCTED AS NOTED ON PLANS. CONTRACTOR IS RESPONSIBLE FOR CORRECTING ANY GRADING OR IMPROVEMENTS THAT ARE NOT CONSTRUCTED PER PLAN.

SCALE: 1"=5'
0 5 10 15

Know what's below. Call before you dig.

AGENCY

FLEWELLING & MOODY
architecture planning interiors

HEADQUARTERS OFFICE:
99 S. Lake Ave., Suite 300
Pasadena, CA 91101
323.543.8300
E-Mail: fm-pasadena@flewelling-moody.com

ANTELOPE VALLEY OFFICE:
1035 West Lancaster Boulevard
Lancaster, California 93534
661.949.0771
E-Mail: fm-lancaster@flewelling-moody.com

An Employee Owned Corporation

ARCHITECT

CONSULTANT

REGISTERED PROFESSIONAL ENGINEER
JOSIAH D. JENSEN
NO 77454
CIVIL
STATE OF CALIFORNIA

ECG
Encompass Consultant Group
25115 AVE STANFORD, SUITE A320, SANTA CLARITA, CA 91355
PHONE: 661.600.9367 WEBSITE: WWW.ECGCIVIL.COM

Drawn by

Checked by

Revisions

No.	Date	Description
1	08/27/2025	BID ALTERNATIVE

All dimensions must be checked at the job by the contractor who accepts full responsibility for their accuracy under the contract. These plans & the specifications in connection therewith have been prepared for a specific site. Any and all responsibility for their use in whole or in part on any other site is hereby disclaimed by Flewelling & Moody.

CITY OF RIDGECREST

SGT. JOHN PINNEY MEMORIAL POOL REPLACEMENT

205 S WARNER ST.
RIDGECREST, CA 93555

ENLARGED DETAILS ALT 1

Job No.
3055-0100

Date
06/25/2025

C3.04A1

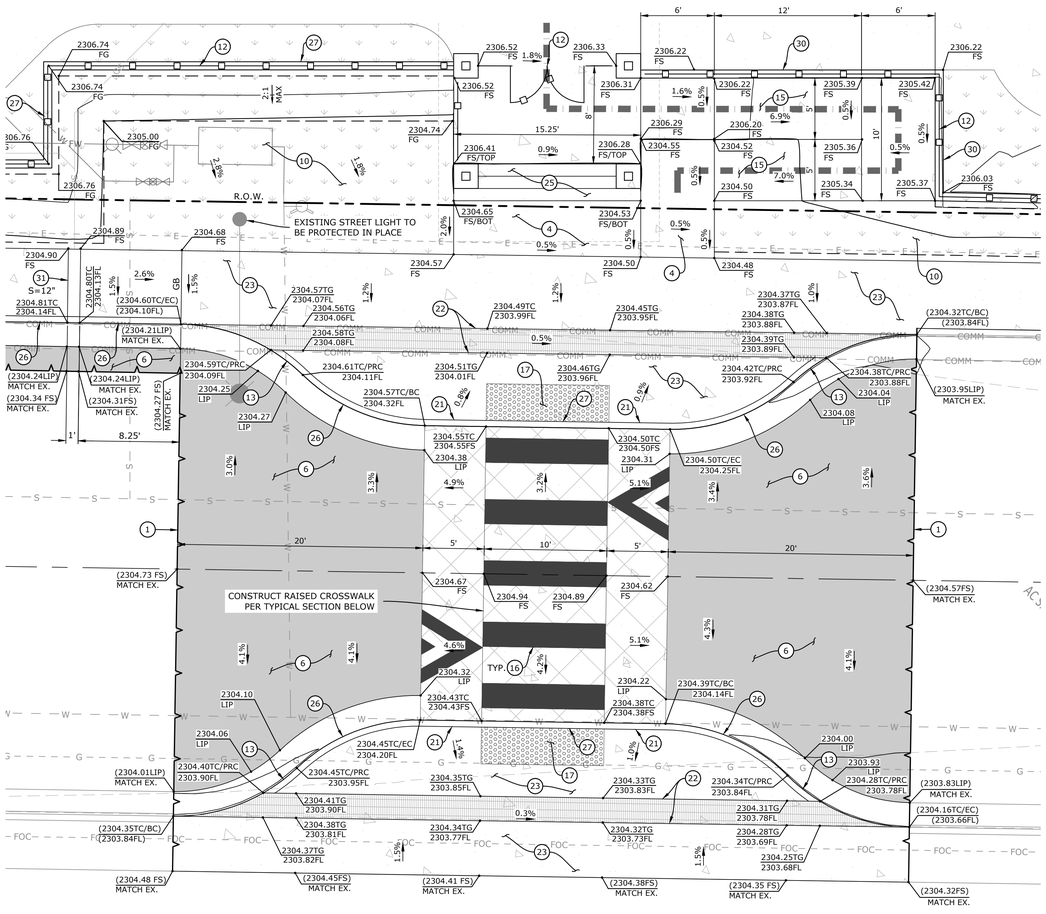

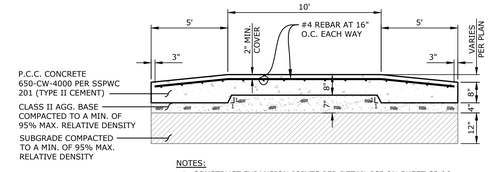

NOTES:
1. CONSTRUCT EXPANSION JOINTS PER DETAIL "G" ON SHEET C3.06.
2. CONSTRUCT CRACK CONTROL JOINTS DETAIL "F" ON SHEET C3.06.

RAISED CROSSWALK TYPICAL SECTION

SCALE: 1"=4' HORIZ.
1"=2' VERT.

ENLARGED DETAIL "A-A"

SCALE: 1"=5'

A-A
3.02A2

1

GRADING AND DRAINAGE CONSTRUCTION NOTES

1. SAWCUT PCC OR AC PAVEMENT TO LIMITS SHOWN.
2. CONSTRUCT PARKING STALL ASPHALT CONCRETE PAVEMENT PER DETAIL "A" ON SHEET C3.06.
3. CONSTRUCT DRIVE AISLE ASPHALT CONCRETE PAVEMENT PER DETAIL "B" ON SHEET C3.06.
4. CONSTRUCT PCC PEDESTRIAN PAVEMENT PER DETAIL "C" ON SHEET C3.06.
5. CONSTRUCT PCC VEHICULAR PAVEMENT PER DETAIL "D" ON SHEET C3.06.
6. CONSTRUCT AC AND BASE TO MATCH EXISTING STREET SECTION THICKNESSES.
7. CONSTRUCT 4' WIDE CONCRETE RIBBON GUTTER PER DETAIL "I" ON SHEET C3.06.
8. CONSTRUCT 0" CONCRETE HEADER PER LANDSCAPE ARCHITECT'S PLAN.
9. CONSTRUCT CONCRETE DRIVEWAY MODIFIED PER SPPWC STD PLAN 110-2, TYPE C ON SHEET C3.07.
10. CONSTRUCT LANDSCAPING PER LANDSCAPE ARCHITECT'S PLAN.
11. CONSTRUCT 10'x10' GROUTED RIP RAP PAD PER DETAIL "J" ON SHEET C3.06.
12. CONSTRUCT FENCE/GATE PER ARCHITECT'S PLAN.
13. CONSTRUCT 6" CURB AND 24" GUTTER PER CITY OF RIDGECREST STD PLATE ST-7, TYPE B ON SHEET C3.07.
14. CONSTRUCT 6" CURB PER SPPWC STD PLAN 120-3, TYPE A1-6(150) ON SHEET C3.07.
15. CONSTRUCT ADA RAMP, WALLS/CURBS AND HANDRAILS PER ARCHITECTURAL PLAN.
16. CONSTRUCT STRIPING PER ARCHITECTURAL PLANS.
17. CONSTRUCT TRUNCATED DOMES PER ARCHITECTURAL PLAN.
18. CONSTRUCT FENCE ON TOP OF WALL PER ARCHITECTURAL PLAN.
19. CONSTRUCT 4" CURB SPPWC STD PLAN 120-3, TYPE A1-6(150) ON SHEET C3.07 AND MODIFIED PER PLAN.
20. CONSTRUCT SCREEN WALL PER ARCHITECT'S PLANS.
21. CONSTRUCT VARIABLE HEIGHT CURB PER PLAN.
22. CONSTRUCT CONCRETE FLUME WITH GRATED COVER PER DETAIL "H" ON SHEET C3.06.
23. CONSTRUCT PCC PEDESTRIAN WALKWAY PER CITY OF RIDGECREST STD PLATE ST-8, TYPE II ON SHEET C3.07.
24. CONSTRUCT SOD TURF PER LANDSCAPE ARCHITECT'S PLAN.
25. CONSTRUCT STAIRS PER ARCHITECT'S PLAN.
26. CONSTRUCT VARIABLE HEIGHT CURB AND 24" GUTTER MODIFIED PER CITY OF RIDGECREST STD. PLATE ST-7, TYPE B ON SHEET C3.07.
27. CONSTRUCT 0" CURB AND MODIFIED PER SPPWC STD. PLAN 120-3, TYPE A1-6(150) ON SHEET C3.07.
28. CONSTRUCT TRASH ENCLOSURE PER ARCHITECT'S PLAN.
29. CONSTRUCT SEAT WALL PER LANDSCAPE ARCHITECT'S PLAN.
30. CONSTRUCT RETAINING CURB PER ARCHITECT'S PLAN.
31. CONSTRUCT PARKWAY DRAIN PER SPPWC STD. PLAN 151-3 ON SHEET C3.07, MODIFIED PER PLAN. INLET TYPE 1. "S" PER PLAN. CONSTRUCT CONNECTION TO ONSITE STORM DRAIN PER WET UTILITY PLAN.
32. CONSTRUCT GUTTER TRANSITION AS SHOWN. SEE PLAN FOR GUTTER LIP ELEVATIONS.
33. CONSTRUCT ACCESSIBLE PARKING SIGN PER ARCHITECTURAL SHEET A1.10, DETAIL 10.
34. CONSTRUCT VAN ACCESSIBLE PARKING SIGN PER ARCHITECTURAL SHEET A1.10, DETAIL 11.
35. CONSTRUCT BOLLARD PER ARCHITECTURAL SITE PLAN SHEET A1.01 AND SHEET A1.10, DETAIL 12.
36. CONSTRUCT 6" DIA. NDS SPEE-D CATCH BASIN WITH ATRIUM GRATE AND OUTLET 3" DIA. PIPE THROUGH CURB FACE AS SHOWN.

LEGEND

- PROPOSED PC CONCRETE - PEDESTRIAN
- PROPOSED PC CONCRETE - VEHICULAR
- PROPOSED ASPHALT CONCRETE - PARKING STALLS
- PROPOSED ASPHALT CONCRETE - DRIVE AISLE
- PROPOSED LANDSCAPING PER LANDSCAPE ARCHITECT'S PLAN
- PROPOSED SOD TURF PER LANDSCAPE ARCHITECT'S PLAN
- PROPOSED SAWCUT
- PROPOSED FENCE
- EXISTING FENCE
- RIGHT OF WAY/PROPERTY LINE
- GB — GRADE BREAK
- 2344 — EXISTING MINOR CONTOURS
- 2345 — EXISTING MAJOR CONTOURS
- 2344 — PROPOSED MINOR CONTOURS
- 2345 — PROPOSED MAJOR CONTOURS
- PROPOSED FLOWLINE
- SD — PROPOSED STORM DRAIN
- FW — PROPOSED FIRE WATER
- W — PROPOSED WATER LINE
- S — PROPOSED SEWER LINE
- EXISTING STREET CENTERLINE
- STORM DRAIN INLET
- OHW — EXISTING OVER HEAD WIRE
- E — EXISTING ELECTRICAL LINE
- G — EXISTING GAS LINE
- W — EXISTING WATER LINE
- SD — EXISTING STORM DRAIN LINE
- FW — EXISTING FIREWATER LINE
- S — EXISTING SEWER LINE
- COMM — EXISTING COMMUNICATION LINE
- 2410.00 FS — PROPOSED ELEVATION
- (2410.00) EG — EXISTING ELEVATION
- 1.5% — PROPOSED GRADE
- PATH OF TRAVEL

GENERAL NOTES

1. CONTRACTOR SHALL ADJUST ALL EXISTING UTILITY PULL BOXS, CLEANOUTS, VAULTS AND OTHER SURFACE LIDS/COVERS WITHIN THE PROJECT AREA TO FINISH SURFACE ELEVATION AS NECESSARY.

2. ALL GRADING AND IMPROVEMENTS SHALL BE CONSTRUCTED AS NOTED ON PLANS. CONTRACTOR IS RESPONSIBLE FOR CORRECTING ANY GRADING OR IMPROVEMENTS THAT ARE NOT CONSTRUCTED PER PLAN.

SCALE: 1"=5'
0 5 10 15

Know what's below. Call before you dig.

AGENCY

FLEWELLING & MOODY
architecture planning interiors

HEADQUARTERS OFFICE:
99 S. Lake Ave., Suite 300
Pasadena, CA 91101
323.543.8300
E-Mail: fm-pasadena@flewelling-moody.com

ANTELOPE VALLEY OFFICE:
1035 West Lancaster Boulevard
Lancaster, California 93534
661.949.0771
E-Mail: fm-lancaster@flewelling-moody.com

An Employee Owned Corporation

ARCHITECT

CONSULTANT

REGISTERED PROFESSIONAL ENGINEER JOSHUA D. JENISON NO 77454 CIVIL STATE OF CALIFORNIA

ECG
Encompass Consultant Group
25115 AVE STANFORD, SUITE A320, SANTA CLARITA, CA 91355
PHONE: 661.600.9367 WEBSITE: WWW.ECGCIVIL.COM

Drawn by

Checked by

Revisions

No.	Date	Description
1	08/27/2025	BID ALTERNATIVE

All dimensions must be checked at the job by the contractor who accepts full responsibility for their accuracy under the contract. These plans & the specifications in connection therewith have been prepared for a specific site. Any and all responsibility for their use in whole or in part on any other site is hereby disclaimed by Flewelling & Moody.

CITY OF RIDGECREST

SGT. JOHN PINNEY MEMORIAL POOL REPLACEMENT

205 S WARNER ST.
RIDGECREST, CA 93555

ENLARGED DETAILS ALT 2

Job No.
3055-0100

Date
06/25/2025

C3.04A2

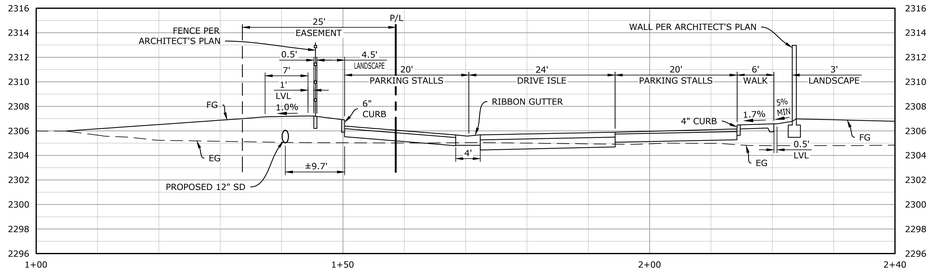

SECTION "A"

SCALE: 1"=10' HORZ
1"=5' VERT

A 3.01

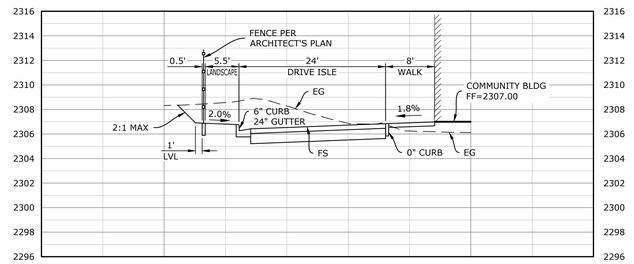

SECTION "B"

SCALE: 1"=10' HORZ
1"=5' VERT

B 3.01

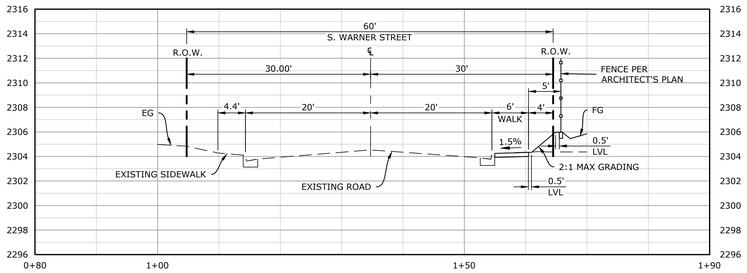

SECTION "C"

SCALE: 1"=10' HORZ
1"=5' VERT

C 3.02

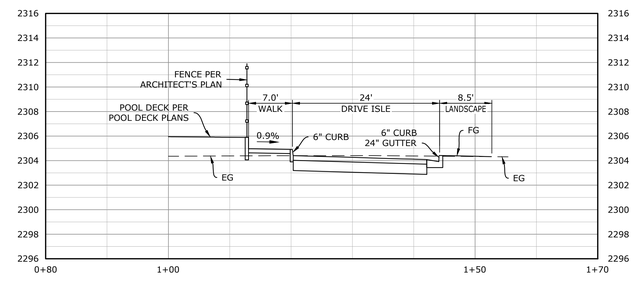

SECTION "D"

SCALE: 1"=10' HORZ
1"=5' VERT

D 3.02

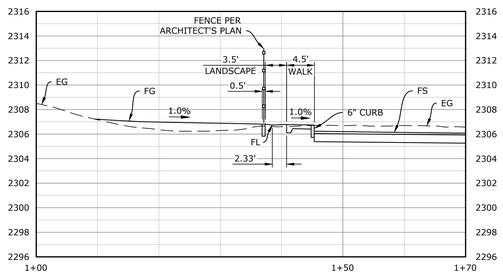

SECTION "E"

SCALE: 1"=10' HORZ
1"=5' VERT

E 3.03

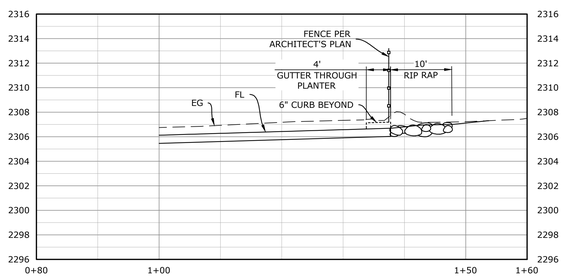

SECTION "F"

SCALE: 1"=10' HORZ
1"=5' VERT

F 3.03

REVIEWED FOR CODE COMPLIANCE BY:
WILLDAN ENGINEERING

Approval of these plans & specifications shall not be construed to be a permit for, or an approval of any violation of any Federal, State, County or City laws or ordinances. One set of approved plans must be kept on the job until completion.

12:12:30 PM Jul 20, 2025

Know what's below. Call before you dig.

AGENCY

FLEWELLING & MOODY
architecture planning interiors

HEADQUARTERS OFFICE:
99 S. Lake Ave., Suite 300
Pasadena, CA 91101
323.543.8300
E-Mail: fm-pasadena@flewelling-moody.com

ANTELOPE VALLEY OFFICE:
1035 West Lancaster Boulevard
Lancaster, California 93534
661.949.0771
E-Mail: fm-lancaster@flewelling-moody.com

An Employee Owned Corporation

ARCHITECT

CONSULTANT

REGISTERED PROFESSIONAL ENGINEER
JOSIAH D. JENISON
NO 77454
CIVIL
STATE OF CALIFORNIA

ECG
Encompass Consultant Group
25115 AVE STANFORD, SUITE A330, SANTA CLARITA, CA 91355
PHONE: 661.600.9367 WEBSITE: WWW.ECGCIVIL.COM

Drawn by

Checked by

Revisions

No.	Date	Description

All dimensions must be checked at the job by the contractor who accepts full responsibility for their accuracy under the contract. These plans & the specifications in connection therewith have been prepared for a specific site. Any and all responsibility for their use in whole or in part on any other site is hereby disclaimed by Flewelling & Moody.

CITY OF RIDGECREST

SGT. JOHN PINNEY MEMORIAL POOL REPLACEMENT

205 S WARNER ST.
RIDGECREST, CA 93555

SITE SECTIONS

Job No.
3055-0100

Date
05/02/2025

C3.05

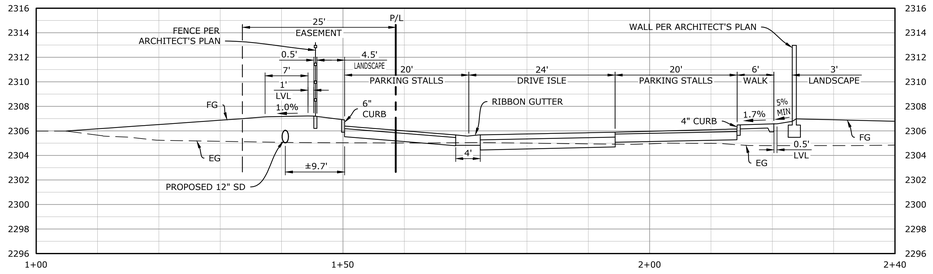

SECTION "A" (A / 3.01A2)

SCALE: 1"=10' HORZ
1"=5' VERT

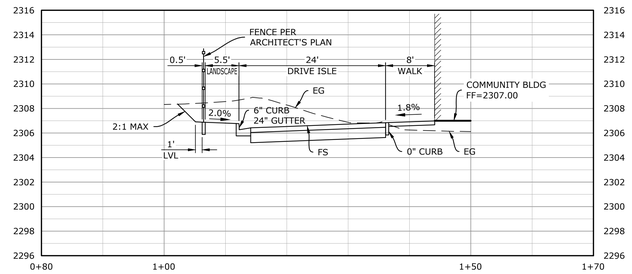

SECTION "B" (B / 3.01A2)

SCALE: 1"=10' HORZ
1"=5' VERT

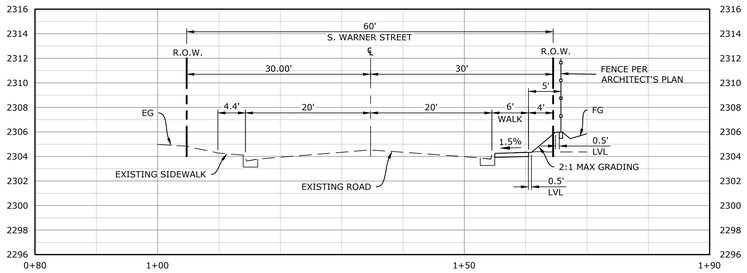

SECTION "C" (C / 3.02A2)

SCALE: 1"=10' HORZ
1"=5' VERT

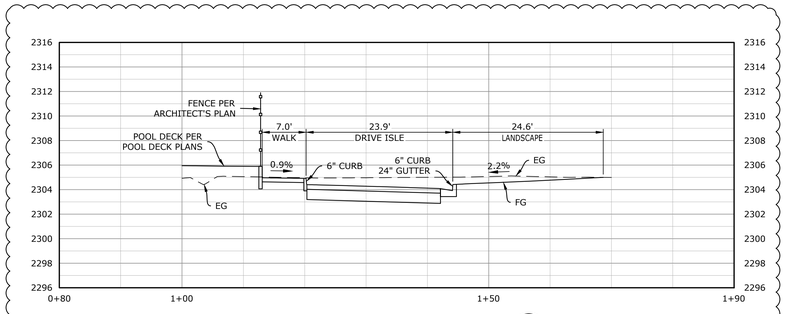

SECTION "D" (D / 3.02A2)

SCALE: 1"=10' HORZ
1"=5' VERT

1

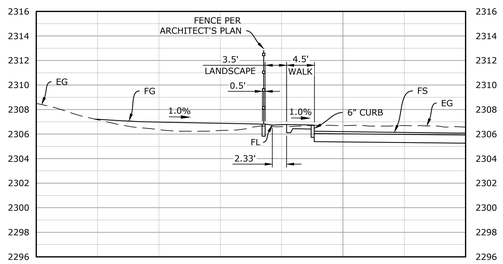

SECTION "E" (E / 3.03A2)

SCALE: 1"=10' HORZ
1"=5' VERT

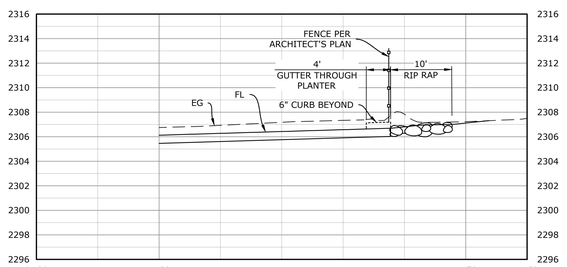

SECTION "F" (F / 3.03A2)

SCALE: 1"=10' HORZ
1"=5' VERT

Know what's below. Call before you dig.

AGENCY

FLEWELLING & MOODY
architecture planning interiors

HEADQUARTERS OFFICE:
99 S. Lake Ave., Suite 300
Pasadena, CA 91101
323.543.8300
E-Mail: fm-pasadena@flewelling-moody.com

ANTELOPE VALLEY OFFICE:
1035 West Lancaster Boulevard
Lancaster, California 93534
661.949.0771
E-Mail: fm-lancaster@flewelling-moody.com

An Employee Owned Corporation

ARCHITECT

CONSULTANT

REGISTERED PROFESSIONAL ENGINEER
JOSIAH D. JENSEN
NO 77454
CIVIL
STATE OF CALIFORNIA

ECG
Encompass Consultant Group
25115 AVE STANFORD, SUITE A330, SANTA CLARITA, CA 91355
PHONE: 661.600.9367 WEBSITE: WWW.ECGCIVIL.COM

Drawn by

Checked by

Revisions

No.	Date	Description
1	08/27/2025	BID ALTERNATIVE

All dimensions must be checked at the job by the contractor who accepts full responsibility for their accuracy under the contract. These plans & the specifications in connection therewith have been prepared for a specific site. Any and all responsibility for their use in whole or in part on any other site is hereby disclaimed by Flewelling & Moody.

CITY OF RIDGECREST

SGT. JOHN PINNEY MEMORIAL POOL REPLACEMENT

205 S WARNER ST.
RIDGECREST, CA 93555

SITE SECTIONS ALT 2

Job No.
3055-0100

Date
06/25/2025

C3.05A2

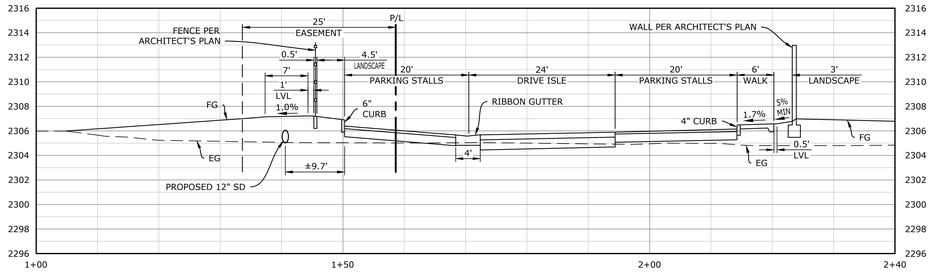

SECTION "A"
SCALE: 1"=10' HORZ
1"=5' VERT
A 3.01A4

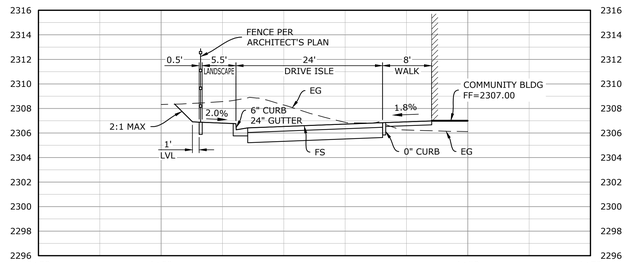

SECTION "B"
SCALE: 1"=10' HORZ
1"=5' VERT
B 3.01A4

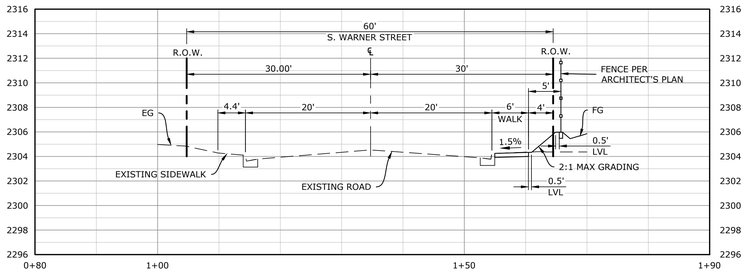

SECTION "C"
SCALE: 1"=10' HORZ
1"=5' VERT
C 3.02A4

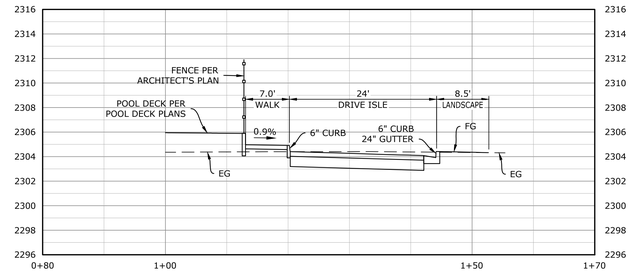

SECTION "D"
SCALE: 1"=10' HORZ
1"=5' VERT
D 3.02A4

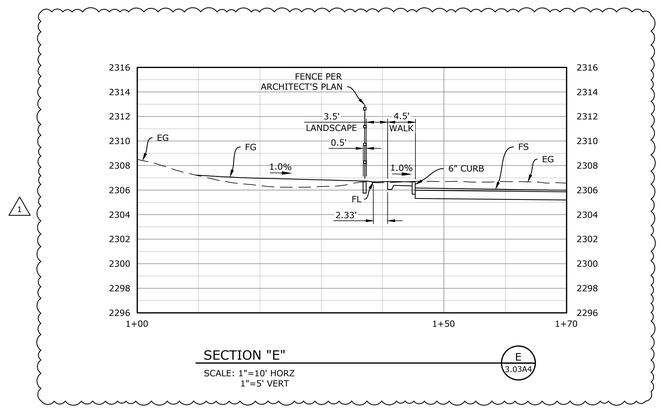

SECTION "E"
SCALE: 1"=10' HORZ
1"=5' VERT
E 3.03A4

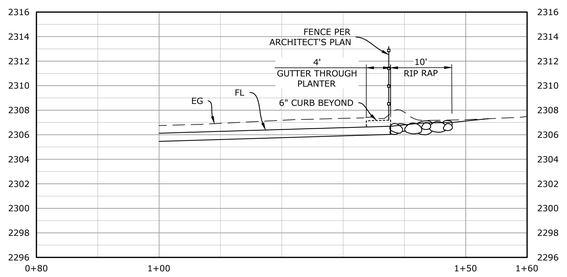

SECTION "F"
SCALE: 1"=10' HORZ
1"=5' VERT
F 3.03A4

Know what's **below.** **Call** before you dig.

N:\projects\0896\engineering\acad\improvements\alternative 4\0896_08_sections_alt 4.dwg; Last Saved By: cbak - Jul 09, 2025 - 12:08pm Last Printed By: CBAK - Jul 11, 2025, 3:38pm;

AGENCY

FLEWELLING & MOODY
architecture planning interiors

HEADQUARTERS OFFICE:
99 S. Lake Ave., Suite 300
Pasadena, CA 91101
323.543.8300
E-Mail: fm-pasadena@flewelling-moody.com

ANTELOPE VALLEY OFFICE:
1035 West Lancaster Boulevard
Lancaster, California 93534
661.949.0771
E-Mail: fm-lancaster@flewelling-moody.com

An Employee Owned Corporation

ARCHITECT

CONSULTANT

REGISTERED PROFESSIONAL ENGINEER
JOSIAH D. JENSEN
NO 77454
CIVIL
STATE OF CALIFORNIA

ECG
Encompass Consultant Group
25115 AVE STANFORD, SUITE A330, SANTA CLARITA, CA 91355
PHONE: 661.600.9367 WEBSITE: WWW.ECGCIVIL.COM

Drawn by

Checked by

Revisions

No.	Date	Description
1	08/27/2025	BID ALTERNATIVE

All dimensions must be checked at the job by the contractor who accepts full responsibility for their accuracy under the contract. These plans & the specifications in connection therewith have been prepared for a specific site. Any and all responsibility for their use in whole or in part on any other site is hereby disclaimed by Flewelling & Moody.

CITY OF RIDGECREST

SGT. JOHN PINNEY MEMORIAL POOL REPLACEMENT

205 S WARNER ST.
RIDGECREST, CA 93555

SITE SECTIONS ALT 4

Job No.
3055-0100

Date
06/25/2025

C3.05A4

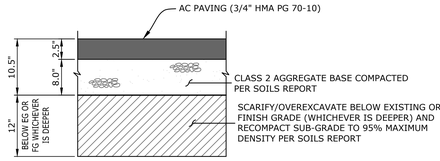

PARKING AC PAVEMENT SECTION TI = 5 (A)

SCALE: N.T.S.

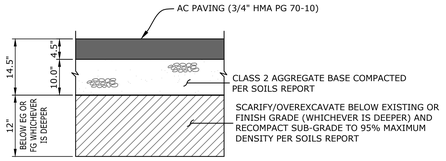

DRIVE AISLE AC PAVEMENT SECTION TI = 7 (B)

SCALE: N.T.S.

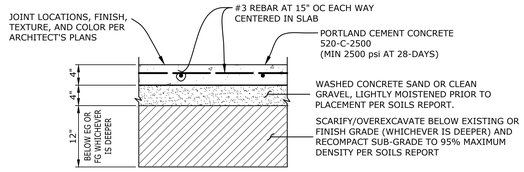

NOTES:
1. CONSTRUCT THICKENED EDGE AT WALKWAY PERIMETER PER DETAIL "E" THIS SHEET.
2. SAWCUT OR TOOLED CRACK CONTROL JOINTS PER DETAIL "F" THIS SHEET.
3. CONSTRUCT EXPANSION JOINTS PER DETAIL "G" THIS SHEET.
4. SECTION IS ESTIMATE ONLY. SOILS ENGINEER TO GIVE FINAL RECOMMENDATION BASED ON R-VALUE TEST RESULTS TAKEN PRIOR TO CONSTRUCTION.

PCC PEDESTRIAN PAVEMENT SECTION (C)

SCALE: N.T.S.

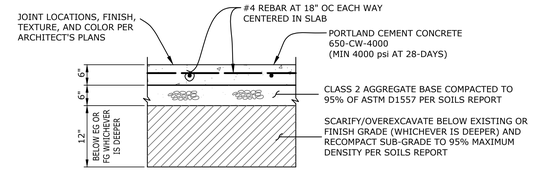

NOTES:
1. CONSTRUCT THICKENED EDGE AT WALKWAY PERIMETER PER DETAIL "E" THIS SHEET.
2. SAWCUT OR TOOLED CRACK CONTROL JOINTS PER DETAIL "F" THIS SHEET.
3. CONSTRUCT EXPANSION JOINTS PER DETAIL "G" THIS SHEET.
4. SECTION IS ESTIMATE ONLY. SOILS ENGINEER TO GIVE FINAL RECOMMENDATION BASED ON R-VALUE TEST RESULTS TAKEN PRIOR TO CONSTRUCTION.

PCC VEHICULAR PAVEMENT SECTION - DRIVE AISLE (D)

SCALE: N.T.S.

"P"= PORTLAND CEMENT CONCRETE THICKNESS (INCHES) PER DETAILS "C" OR DETAIL "D" HEREON.
"B"= BASE LAYER THICKNESS (INCHES) PER DETAILS "C" OR DETAIL "D" HEREON.

PCC PAVEMENT OR WALKWAY THICKENED EDGE (E)

SCALE: N.T.S.

NOTES:
1. SEE SPECIFICATIONS FOR TYPE OF JOINT SEALANT.
2. CONSTRUCTION JOINTS SHALL ONLY BE LOCATED WHERE A CRACK CONTROL JOINT OR OTHER JOINT WOULD OTHERWISE HAVE BEEN REQUIRED.
3. SEE PLAN FOR THICKNESS, T.
4. FOR CRACK CONTROL JOINTS LOCATIONS, SEE ARCH. PLANS.
5. CRACK CONTROL JOINTS TO BE SPACED AT 12' MAX O.C. E.W.

CONSTRUCTION/CRACK CONTROL JOINT (F)

SCALE: N.T.S.

NOTES:
1. SEE SPECIFICATIONS FOR TYPE OF JOINT SEALANT & EXPANSION JOINT FILLER.
2. USE SMOOTH BARS FOR DOWELS COATED TO PREVENT BOND, GREASE ONE END PRIOR TO SECOND POUR.
3. SEE PLAN FOR THICKNESS, T.
4. PROVIDE ADEQUATE SUPPORT FOR DOWELS TO ENSURE THEY REMAIN LEVEL WITH FINISH SURFACE.
5. STOP SLAB REINFORCING AT EXPANSION JOINTS.
6. EXPANSION JOINTS TO BE SPACED AT 40' MAX E.W. AND CONSTRUCTED AT ADJACENT STRUCTURES.

EXPANSION JOINT (G)

SCALE: N.T.S.

CONCRETE FLUME WITH GRATED COVER (H)

SCALE: N.T.S.

NOTES:
1. CONCRETE SHALL BE CLASS 560-C-4000.
2. EXPOSED EDGES SHALL HAVE A 1/2" TOOLED RADIUS.
3. SUBGRADE SOILS SHALL BE COMPACTED TO 95% OF MAXIMUM DENSITY.
4. INSTALL WEAKENED PLANE JOINTS AT 12' MAX SPACING.
5. INSTALL EXPANSION JOINTS AT 24' MAX. SPACING.

CONCRETE RIBBON GUTTER (I)

SCALE: N.T.S.

GROUTED ROCK RIP-RAP PAD DETAIL (J)

SCALE: N.T.S.

REVIEWED FOR CODE COMPLIANCE BY:
WILLDAN ENGINEERING

Approval of these plans & specifications shall not be construed to be a permit for, or an approval of any violation of any Federal, State, County or City laws or ordinances. One set of approved plans must be kept on the job until completion.

12:12:31 PM Jul 20, 2025

Know what's below. Call before you dig.

AGENCY

FLEWELLING & MOODY
architecture planning interiors

HEADQUARTERS OFFICE:
99 S. Lake Ave., Suite 300
Pasadena, CA 91101
323.543.8300
E-Mail: fm-pasadena@flewelling-moody.com

ANTELOPE VALLEY OFFICE:
1035 West Lancaster Boulevard
Lancaster, California 93534
661.949.0771
E-Mail: fm-lancaster@flewelling-moody.com

An Employee Owned Corporation

ARCHITECT

CONSULTANT

REGISTERED PROFESSIONAL ENGINEER
JOSTAN D. JENISON
NO 77454
CIVIL
STATE OF CALIFORNIA

ECG
Encompass Consultant Group
25115 AVE STANFORD, SUITE A320, SANTA CLARITA, CA 91355
PHONE: 661.600.9367 WEBSITE: WWW.ECGCIVIL.COM

Drawn by

Checked by

Revisions

No.	Date	Description

All dimensions must be checked at the job by the contractor who accepts full responsibility for their accuracy under the contract. These plans & the specifications in connection therewith have been prepared for a specific site. Any and all responsibility for their use in whole or in part on any other site is hereby disclaimed by Flewelling & Moody.

CITY OF RIDGECREST

SGT. JOHN PINNEY MEMORIAL POOL REPLACEMENT

205 S WARNER ST.
RIDGECREST, CA 93555

GRADING DETAILS

Job No. 3055-0100

Date 05/02/2025

C3.06

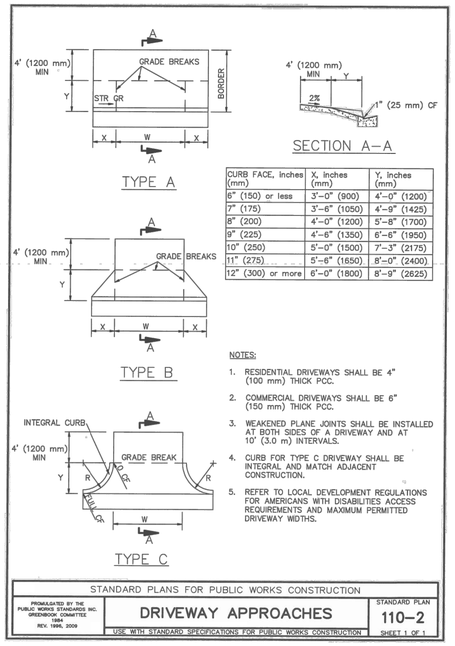

CURB FACE, inches (mm)	X, inches (mm)	Y, inches (mm)
6" (150) or less	3'–0" (900)	4'–0" (1200)
7" (175)	3'–6" (1050)	4'–9" (1425)
8" (200)	4'–0" (1200)	5'–8" (1700)
9" (225)	4'–6" (1350)	6'–6" (1950)
10" (250)	5'–0" (1500)	7'–3" (2175)
11" (275)	5'–6" (1650)	8'–0" (2400)
12" (300) or more	6'–0" (1800)	8'–9" (2625)

NOTES:

1. RESIDENTIAL DRIVEWAYS SHALL BE 4" (100 mm) THICK PCC.
2. COMMERCIAL DRIVEWAYS SHALL BE 6" (150 mm) THICK PCC.
3. WEAKENED PLANE JOINTS SHALL BE INSTALLED AT BOTH SIDES OF A DRIVEWAY AND AT 10' (3.0 m) INTERVALS.
4. CURB FOR TYPE C DRIVEWAY SHALL BE INTEGRAL AND MATCH ADJACENT CONSTRUCTION.
5. REFER TO LOCAL DEVELOPMENT REGULATIONS FOR AMERICANS WITH DISABILITIES ACCESS REQUIREMENTS AND MAXIMUM PERMITTED DRIVEWAY WIDTHS.

STANDARD PLANS FOR PUBLIC WORKS CONSTRUCTION

PROMULGATED BY THE PUBLIC WORKS STANDARDS INC. GREENBOOK COMMITTEE 1994 REV. 1995, 2009

DRIVEWAY APPROACHES

USE WITH STANDARD SPECIFICATIONS FOR PUBLIC WORKS CONSTRUCTION

STANDARD PLAN 110–2

SHEET 1 OF 1

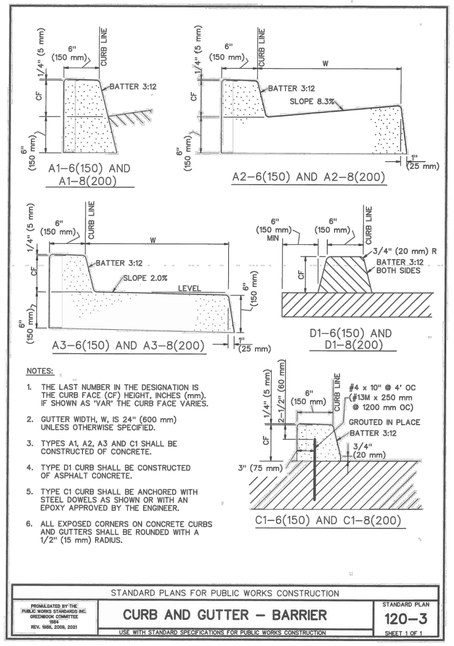

NOTES:

1. THE LAST NUMBER IN THE DESIGNATION IS THE CURB FACE (CF) HEIGHT, INCHES (mm). IF SHOWN AS 'VAR' THE CURB FACE VARIES.
2. GUTTER WIDTH, W, IS 24" (600 mm) UNLESS OTHERWISE SPECIFIED.
3. TYPES A1, A2, A3 AND C1 SHALL BE CONSTRUCTED OF CONCRETE.
4. TYPE D1 CURB SHALL BE CONSTRUCTED OF ASPHALT CONCRETE.
5. TYPE C1 CURB SHALL BE ANCHORED WITH STEEL DOWELS AS SHOWN OR WITH AN EPOXY APPROVED BY THE ENGINEER.
6. ALL EXPOSED CORNERS ON CONCRETE CURBS AND GUTTERS SHALL BE ROUNDED WITH A 1/2" (15 mm) RADIUS.

STANDARD PLANS FOR PUBLIC WORKS CONSTRUCTION

PROMULGATED BY THE PUBLIC WORKS STANDARDS INC. GREENBOOK COMMITTEE 1994 REV. 1995, 2009, 2021

CURB AND GUTTER – BARRIER

USE WITH STANDARD SPECIFICATIONS FOR PUBLIC WORKS CONSTRUCTION

STANDARD PLAN 120–3

SHEET 1 OF 1

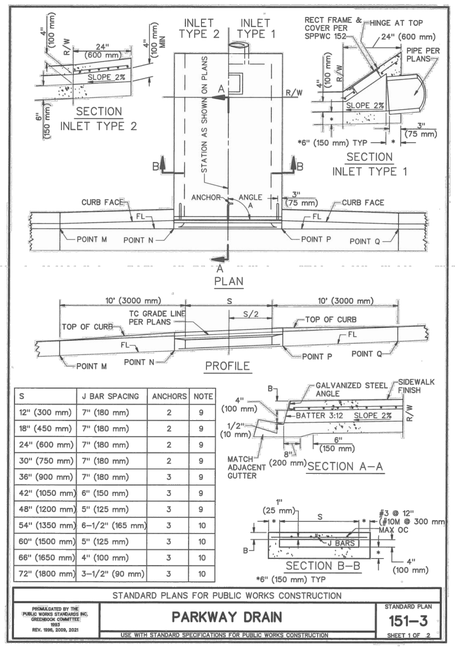

S	J BAR SPACING	ANCHORS	NOTE
12" (300 mm)	7" (180 mm)	2	9
18" (450 mm)	7" (180 mm)	2	9
24" (600 mm)	7" (180 mm)	2	9
30" (750 mm)	7" (180 mm)	2	9
36" (900 mm)	7" (180 mm)	3	9
42" (1050 mm)	6" (150 mm)	3	9
48" (1200 mm)	5" (125 mm)	3	9
54" (1350 mm)	6–1/2" (165 mm)	3	10
60" (1500 mm)	5" (125 mm)	3	10
66" (1650 mm)	4" (100 mm)	3	10
72" (1800 mm)	3–1/2" (90 mm)	3	10

STANDARD PLANS FOR PUBLIC WORKS CONSTRUCTION

PROMULGATED BY THE PUBLIC WORKS STANDARDS INC. GREENBOOK COMMITTEE 1994 REV. 1995, 2009, 2021

PARKWAY DRAIN

USE WITH STANDARD SPECIFICATIONS FOR PUBLIC WORKS CONSTRUCTION

STANDARD PLAN 151–3

SHEET 1 OF 2

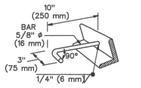

DETAIL OF ANCHOR

NOTES

1. FLOOR OF BOX SHALL BE TROWLED SMOOTH.
2. IF THE TOE OF SLOPE IS ALLOWED WITHIN THE R/W, INLET TYPE 1 BEGINS AT THE TOE RATHER THAN AT THE R/W LINE.
3. FOR OPEN DITCH (TYPE 2), THE 24" (600 mm) EXTENSION BEYOND THE R/W LINE IS NOT REQUIRED WHEN BACK OF WALK IS 24" (600 mm) OR MORE FROM THE R/W LINE; HOWEVER, THE PARKWAY DRAIN SHALL EXTEND TO THE R/W LINE IN ANY EVENT.
4. TOP OF INLET STRUCTURE (TYPE 1 & 2) SHALL BE FLUSH WITH ADJACENT SURFACE WHERE PRACTICAL.
5. A HEADED STEEL STUD 5/8" x 6–3/8" WITH A 1" HEAD (16 x 160 mm, 25 mm HEAD) ATTACHED BY A FULL PENETRATION BUTT WELD MAY BE USED AS AN ALTERNATE ANCHOR.
6. NORMAL CURB FACE AT POINT M AND Q. CURB FACE IS B + 5" (125 mm) AT POINT N AND P.
7. THE 3" (75 mm) LEG OF THE 5/8" (16 mm) DIA ANCHORS SHALL BE PARALLEL TO THE TOP OF SIDEWALK.
8. J BARS ARE #3 (@10M).
9. FOR S = 48" (1200 mm) AND LESS, B = 3" (75 mm). USE 2–1/2" x 2" x 3/8" (64 x 51 x 9.5 mm) GALVANIZED STEEL ANGLE.
10. FOR S = 54" (1350 mm) OR MORE, B = 4" (100 mm). USE 3–1/2" x 3" x 1/2" (89 x 76 x 12.7 mm) GALVANIZED STEEL ANGLE.
11. ANGLE A EQUALS 90° UNLESS OTHERWISE SPECIFIED.

STANDARD PLANS FOR PUBLIC WORKS CONSTRUCTION

PARKWAY DRAIN

STANDARD PLAN 151–3

SHEET 2 OF 2

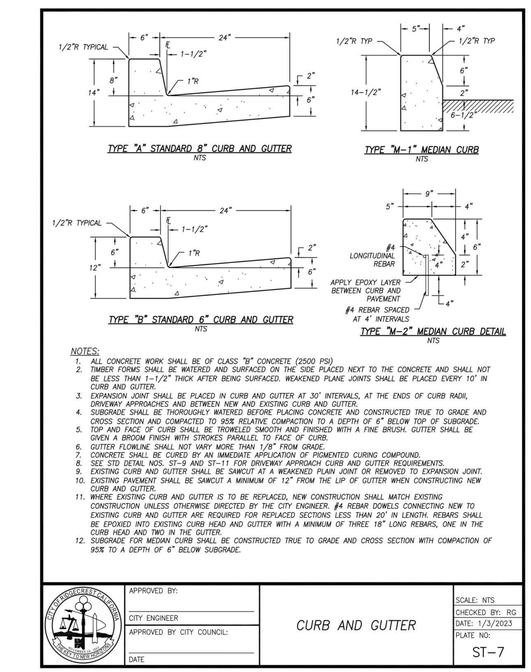

NOTES:

1. ALL CONCRETE WORK SHALL BE OF CLASS "B" CONCRETE (2500 PSI)
2. TIMBER FORMS SHALL BE WATERED AND SURFACED ON THE SIDE PLACED NEXT TO THE CONCRETE AND SHALL NOT BE LESS THAN 1–1/2" THICK AFTER BEING SURFACED. WEAKENED PLANE JOINTS SHALL BE PLACED EVERY 10' IN CURB AND GUTTER.
3. EXPANSION JOINT SHALL BE PLACED IN CURB AND GUTTER AT 30' INTERVALS, AT THE ENDS OF CURB RADII, DRIVEWAY APPROACHES AND BETWEEN NEW AND EXISTING CURB AND GUTTER.
4. SUBGRADE SHALL BE THOROUGHLY WATERED BEFORE PLACING CONCRETE AND CONSTRUCTED TRUE TO GRADE AND CROSS SECTION AND COMPACTED TO 95% RELATIVE COMPACTION TO A DEPTH OF 6" BELOW TOP OF SUBGRADE.
5. TOP AND FACE OF CURB SHALL BE TROWELED SMOOTH AND FINISHED WITH A FINE BRUSH. GUTTER SHALL BE GIVEN A BROOM FINISH WITH STROKES PARALLEL TO FACE OF CURB.
6. GUTTER FLOWLINE SHALL NOT VARY MORE THAN 1/8" FROM GRADE.
7. CONCRETE SHALL BE CURED BY AN IMMEDIATE APPLICATION OF PIGMENTED CURING COMPOUND.
8. SEE STD DETAIL NOS. ST–9 AND ST–11 FOR DRIVEWAY APPROACH CURB AND GUTTER REQUIREMENTS.
9. EXISTING CURB AND GUTTER SHALL BE SAWCUT AT A WEAKENED PLAIN JOINT OR REMOVED TO EXPANSION JOINT.
10. EXISTING PAVEMENT SHALL BE SAWCUT A MINIMUM OF 12" FROM THE LIP OF GUTTER WHEN CONSTRUCTING NEW CURB AND GUTTER.
11. WHERE EXISTING CURB AND GUTTER IS TO BE REPLACED, NEW CONSTRUCTION SHALL MATCH EXISTING CONSTRUCTION UNLESS OTHERWISE DIRECTED BY THE CITY ENGINEER. #4 REBAR DOWELS CONNECTING NEW TO EXISTING CURB AND GUTTER ARE REQUIRED FOR REPLACED SECTIONS LESS THAN 20' IN LENGTH. REBARS SHALL BE EPOXIED INTO EXISTING CURB HEAD AND GUTTER WITH A MINIMUM OF THREE 18" LONG REBARS, ONE IN THE CURB HEAD AND TWO IN THE GUTTER.
12. SUBGRADE FOR MEDIAN CURB SHALL BE CONSTRUCTED TRUE TO GRADE AND CROSS SECTION WITH COMPACTION OF 95% TO A DEPTH OF 6" BELOW SUBGRADE.

APPROVED BY:	CURB AND GUTTER	SCALE: NTS
CITY ENGINEER		CHECKED BY: RG
APPROVED BY CITY COUNCIL:		DATE: 1/3/2023
DATE		PLATE NO: ST–7

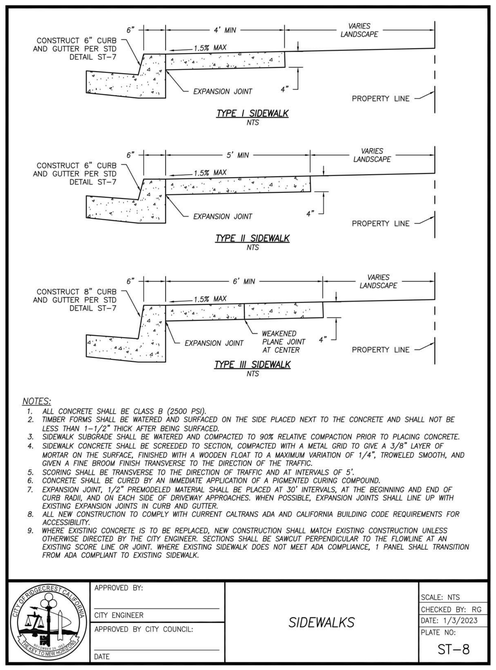

NOTES:

1. ALL CONCRETE SHALL BE CLASS B (2500 PSI).
2. TIMBER FORMS SHALL BE WATERED AND SURFACED ON THE SIDE PLACED NEXT TO THE CONCRETE AND SHALL NOT BE LESS THAN 1–1/2" THICK AFTER BEING SURFACED.
3. SIDEWALK SUBGRADE SHALL BE WATERED AND COMPACTED TO 90% RELATIVE COMPACTION PRIOR TO PLACING CONCRETE.
4. SIDEWALK CONCRETE SHALL BE SCREEDED TO SECTION, COMPACTED WITH A METAL GRID TO GIVE A 3/8" LAYER OF MORTAR ON THE SURFACE, FINISHED WITH A WOODEN FLOAT TO A MAXIMUM VARIATION OF 1/4", TROWELED SMOOTH, AND GIVEN A FINE BROOM FINISH TRANSVERSE TO THE DIRECTION OF THE TRAFFIC.
5. SCORING SHALL BE TRANSVERSE TO THE DIRECTION OF TRAFFIC AND AT INTERVALS OF 5'.
6. CONCRETE SHALL BE CURED BY AN IMMEDIATE APPLICATION OF A PIGMENTED CURING COMPOUND.
7. EXPANSION JOINT, 1/2" PREMODELED MATERIAL SHALL BE PLACED AT 30' INTERVALS, AT THE BEGINNING AND END OF CURB RADII, AND ON EACH SIDE OF DRIVEWAY APPROACHES. WHEN POSSIBLE, EXPANSION JOINTS SHALL LINE UP WITH EXISTING EXPANSION JOINTS IN CURB AND GUTTER.
8. ALL NEW CONSTRUCTION TO COMPLY WITH CURRENT CALTRANS ADA AND CALIFORNIA BUILDING CODE REQUIREMENTS FOR ACCESSIBILITY.
9. WHERE EXISTING CONCRETE IS TO BE REPLACED, NEW CONSTRUCTION SHALL MATCH EXISTING CONSTRUCTION UNLESS OTHERWISE DIRECTED BY THE CITY ENGINEER. SECTIONS SHALL BE SAWCUT PERPENDICULAR TO THE FLOWLINE AT AN EXISTING SCORE LINE OR JOINT. WHERE EXISTING SIDEWALK DOES NOT MEET ADA COMPLIANCE, 1 PANEL SHALL TRANSITION FROM ADA COMPLIANT TO EXISTING SIDEWALK.

APPROVED BY:	SIDEWALKS	SCALE: NTS
CITY ENGINEER		CHECKED BY: RG
APPROVED BY CITY COUNCIL:		DATE: 1/3/2023
DATE		PLATE NO: ST–8

REVIEWED FOR CODE COMPLIANCE BY: WILLDAN ENGINEERING

Approval of these plans & specifications shall not be construed to be a permit for, or an approval of any violation of any Federal, State, County or City laws or ordinances. One set of approved plans must be kept on the job until completion.

12:12:32 PM Jul 20, 2025

Know what's below. Call before you dig.

AGENCY

FLEWELLING & MOODY
architecture planning interiors

HEADQUARTERS OFFICE:
99 S. Lake Ave., Suite 300
Pasadena, CA 91101
323.543.8300
E-Mail: fm-pasadena@flewelling-moody.com

ANTELOPE VALLEY OFFICE:
1035 West Lancaster Boulevard
Lancaster, California 93534
661.949.0771
E-Mail: fm-lancaster@flewelling-moody.com

An Employee Owned Corporation

ARCHITECT

REGISTERED PROFESSIONAL ENGINEER JOSIAH D. JENISON NO 77454 CIVIL STATE OF CALIFORNIA

CONSULTANT

ECG Encompass Consultant Group
25115 AVE STANFORD, SUITE A320, SANTA CLARITA, CA 91355
PHONE: 661.600.9367 WEBSITE: WWW.ECGCIVIL.COM

Drawn by

Checked by

Revisions

No.	Date	Description

All dimensions must be checked at the job by the contractor who accepts full responsibility for their accuracy under the contract. These plans & the specifications in connection therewith have been prepared for a specific site. Any and all responsibility for their use in whole or in part on any other site is hereby disclaimed by Flewelling & Moody.

CITY OF RIDGECREST

SGT. JOHN PINNEY MEMORIAL POOL REPLACEMENT

205 S WARNER ST.
RIDGECREST, CA 93555

GRADING DETAILS

Job No. 3055-0100

Date 05/02/2025

C3.07

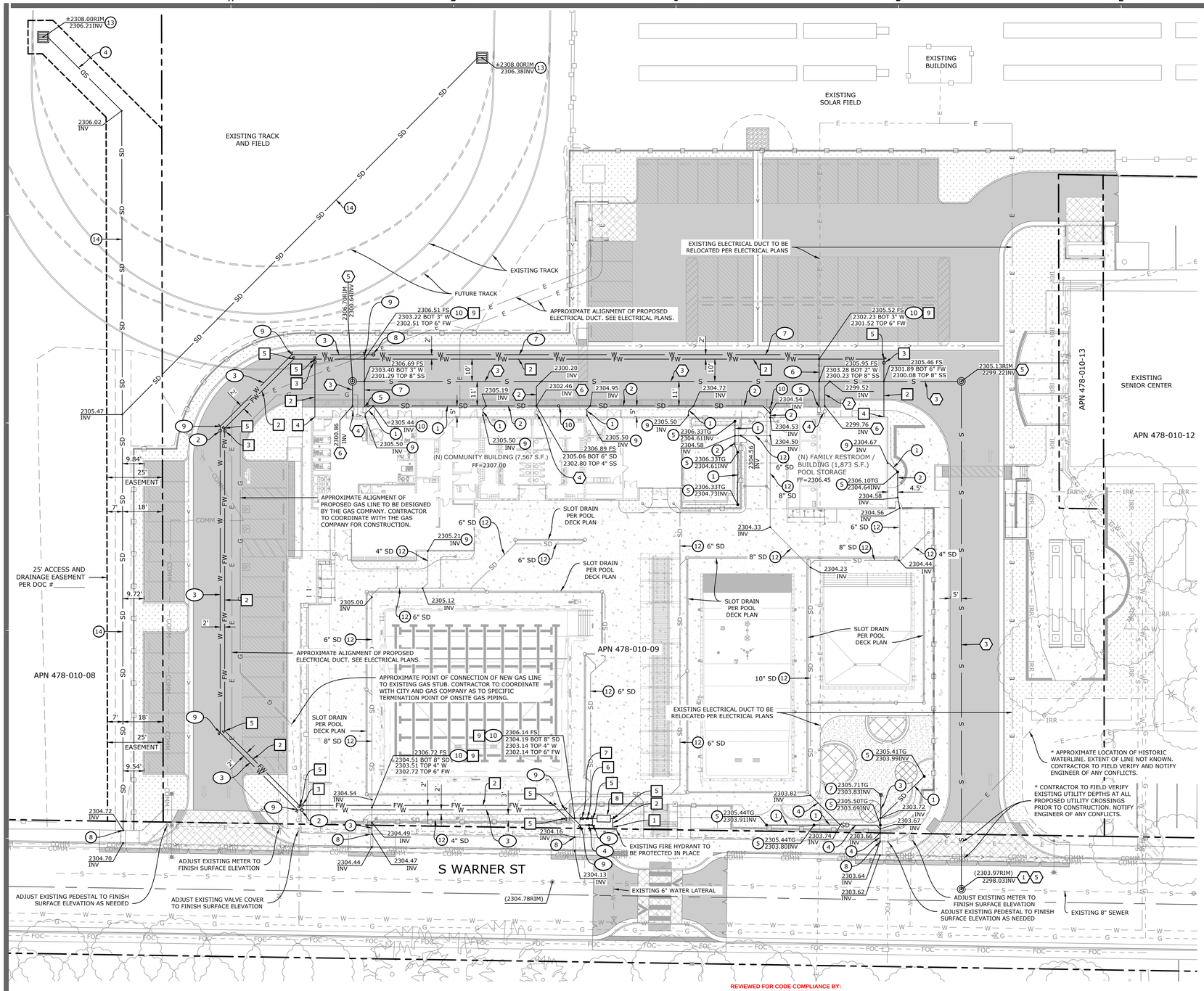

SEWER CONSTRUCTION NOTES

1. CONSTRUCT CONNECTION TO EXISTING 8" SEWER LINE AS SHOWN.
2. CONSTRUCT 4" SDR 35 PVC SANITARY SEWER LINE PER DETAIL "AA" ON SHEET C4.02. MINIMUM 2.0% SLOPE. INSTALL ALL FITTINGS, ELBOWS, WYES AND TEES NECESSARY TO CONSTRUCT SEWER SYSTEM AS SHOWN.
3. CONSTRUCT 8" SDR 35 PVC SANITARY SEWER LINE PER DETAIL "AA" ON SHEET C4.02. MINIMUM 0.52% SLOPE. INSTALL ALL FITTINGS, ELBOWS, WYES AND TEES NECESSARY TO CONSTRUCT SEWER SYSTEM AS SHOWN.
4. CONSTRUCT SANITARY SEWER CLEANOUT PER PLUMBING PLANS.
5. CONSTRUCT SEWER MANHOLE PER CITY OF RIDGECREST STANDARD DETAIL S-1 AND FRAME AND COVER PER CITY OF RIDGECREST STANDARD DETAIL S-2. DETAILS ON SHEET C4.02. EPOXY LINE ALL NEW SEWER MANHOLES.
6. CONSTRUCT CONNECTION TO BUILDING SEWER LINE. SEE PLUMBING PLAN FOR CONTINUATION.

STORM DRAIN CONSTRUCTION NOTES

1. CONSTRUCT 4" SDR 35 PVC PIPE PER DETAIL "AA" ON SHEET C4.02. NSTALL ALL FITTINGS, ELBOWS, WYES AND TEES NECESSARY TO CONSTRUCT STORM DRAIN SYSTEM AS SHOWN.
2. CONSTRUCT 6" SDR 35 PVC PIPE PER DETAIL "AA" ON SHEET C4.02. INSTALL ALL FITTINGS, ELBOWS, WYES AND TEES NECESSARY TO CONSTRUCT STORM DRAIN SYSTEM AS SHOWN.
3. CONSTRUCT 8" SDR 35 PVC PIPE PER DETAIL "AA" ON SHEET C4.02. INSTALL ALL FITTINGS, ELBOWS, WYES AND TEES NECESSARY TO CONSTRUCT STORM DRAIN SYSTEM AS SHOWN.
4. CONSTRUCT 10" SDR 35 PVC PIPE PER DETAIL "AA" ON SHEET C4.02. INSTALL ALL FITTINGS, ELBOWS, WYES AND TEES NECESSARY TO CONSTRUCT STORM DRAIN SYSTEM AS SHOWN.
5. CONSTRUCT 4" SDR 35 PVC PIPE RISER AND 4" ATRIUM GRATE.
6. NOT USED.
7. CONSTRUCT 18" DIAMETER NYLOPLAST DRAIN BASIN WITH STANDARD GRATE OR APPROVED EQUAL.
8. CONSTRUCT CONNECTION OF STORM DRAIN LINE TO PARKWAY DRAIN. SEE GRADING PLANS FOR CONTINUATION.
9. CONSTRUCT CONNECTION TO BUILDING ROOF DRAIN DOWNSPOUT PER ARCHITECT'S PLAN.
10. CONSTRUCT STORM DRAIN CLEANOUT PER CITY OF RIDGECREST STANDARD DETAIL S-3 ON SHEET C4.02 (MODIFIED FOR STORM DRAIN). LID TO READ "STORM".
11. NOT USED.
12. CONSTRUCT STORM DRAIN PER POOL DECK PLAN.
13. CONSTRUCT 48" X 48" PRECAST CONCRETE STORM DRAIN CATCH BASIN WITH STANDARD GRATE.
14. CONSTRUCT 12" SDR 35 PVC PIPE PER DETAIL "AA" ON SHEET C4.02. INSTALL ALL FITTINGS, ELBOWS, WYES AND TEES NECESSARY TO CONSTRUCT STORM DRAIN SYSTEM AS SHOWN.

DOMESTIC WATER CONSTRUCTION NOTES

1. NOT USED.
2. CONSTRUCT 4" GATE VALVE AND VALVE BOX PER INDIAN WELLS VALLEY WATER DISTRICT STANDARD DRAWING P-9 ON SHEET C4.03.
3. CONSTRUCT 4" SCH 80 PVC WATER LINE WITH ALL NECESSARY FITTINGS PER DETAIL "BB" ON SHEET C4.02.
4. CONSTRUCT 4" DOMESTIC WATER REDUCED PRESSURE BACKFLOW PREVENTER ASSEMBLY PER INDIAN WELLS VALLEY WATER DISTRICT STANDARD DRAWING BF-1 ON SHEET C4.03. INSTALL FREEZE PROTECTION BLANKET.
5. CONSTRUCT CONNECTION TO BUILDING WATER LINE. SEE PLUMBING PLANS FOR CONTINUATION.
6. CONSTRUCT 2" SCH 80 PVC WATER LINE WITH ALL NECESSARY FITTINGS PER DETAIL "CC" ON SHEET C4.02.
7. CONSTRUCT 3" SCH 80 PVC WATER LINE WITH ALL NECESSARY FITTINGS PER DETAIL "BB" ON SHEET C4.02.
8. CONSTRUCT 3" GATE VALVE AND VALVE BOX PER INDIAN WELLS VALLEY WATER DISTRICT STANDARD DRAWING P-9 ON SHEET C4.03.
9. CONSTRUCT HORIZONTAL BEND AND CONCRETE THRUST BLOCK PER INDIAN WELLS VALLEY WATER DISTRICT P-6(A-C) ON SHEET C4.03.
10. CONSTRUCT WATER LINE UTILITY CROSSING PER UTILITY CROSSING NOTES HEREON.

FIRE WATER CONSTRUCTION NOTES

1. CONSTRUCT CONNECTION TO EXISTING 6" INDIAN WELLS VALLEY WATER DISTRICT LINE PER INDIAN WELLS VALLEY WATER DISTRICT STANDARD CONSTRUCTION AND SPECIFICATIONS DRAWINGS. SEE WATER CONNECTION DETAIL "DD" ON SHEET C4.02. EXACT LOCATION OF EXISTING WATER LINE IS UNKNOWN. CONTRACTOR TO FIELD VERIFY PRIOR TO CONSTRUCTION AND NOTIFY ENGINEER OF ANY CONFLICTS WITH DESIGN.
2. CONSTRUCT 6" C900 CL 305 (DR 14) PVC FIRE WATER LINE PER DETAIL "BB" ON SHEET C4.02.
3. CONSTRUCT GATE VALVE AND VALVE BOX PER INDIAN WELLS VALLEY WATER DISTRICT STANDARD DRAWING P-9 ON SHEET C4.03.
4. CONSTRUCT CONNECTION TO BUILDING FIRE RISER. SEE FIRE PROTECTION PLANS FOR CONTINUATION.
5. CONSTRUCT HORIZONTAL BEND AND CONCRETE THRUST BLOCK PER INDIAN WELLS VALLEY WATER DISTRICT P-6(A-C) ON SHEET C4.03.
6. CONSTRUCT 6" DOUBLE CHECK DETECTOR ASSEMBLY PER INDIAN WELLS VALLEY WATER DISTRICT STANDARD DRAWING BF-2 ON SHEET C4.03. INSTALL FREEZE PROTECTION BLANKET.
7. CONSTRUCT FIRE DEPARTMENT CONNECTION.
8. CONSTRUCT 6" COMBINED FIRE AND DOMESTIC METER PER INDIAN WELLS VALLEY WATER DISTRICT STANDARD DRAWING P-25 ON SHEET C4.03.
9. CONSTRUCT FIRE WATER LINE UTILITY CROSSING PER UTILITY CROSSING NOTES HEREON.

CAUTION: UNDERGROUND UTILITIES

THE LOCATIONS OF UNDERGROUND UTILITIES AND STRUCTURES SHOWN ON THESE PLANS ARE BASED ON AVAILABLE RECORDS AND LIMITED FIELD INVESTIGATIONS. THE INFORMATION IS PROVIDED FOR REFERENCE ONLY AND SHOULD NOT BE CONSIDERED COMPLETE OR ACCURATE. THE PRESENCE OF ADDITIONAL UNDERGROUND UTILITIES OR STRUCTURES, WHETHER KNOWN OR UNKNOWN, REPORTED OR UNREPORTED, SHOULD BE ANTICIPATED.

BY ACCEPTING THESE PLANS AND PROCEEDING WITH CONSTRUCTION, THE CONTRACTOR ACKNOWLEDGES AND ASSUMES ALL RISKS ASSOCIATED WITH THE EXISTENCE OF UNDERGROUND UTILITIES AND STRUCTURES, INCLUDING THOSE NOT SHOWN OR INACCURATELY DEPICTED ON THE PLANS. THE ENGINEER, OWNER, AND THEIR REPRESENTATIVES, SHALL NOT BE LIABLE FOR ANY DAMAGES, DELAYS, CLAIMS, OR ADDITIONAL COSTS RESULTING FROM UNKNOWN OR INACCURATELY LOCATED UNDERGROUND UTILITIES OR STRUCTURES.

THE CONTRACTOR SHALL TAKE ALL NECESSARY PRECAUTIONS, INCLUDING BUT NOT LIMITED TO POTHOLING, UTILITY COORDINATION, AND COMPLIANCE WITH ALL APPLICABLE LAWS AND REGULATIONS, TO VERIFY THE EXACT LOCATIONS AND DEPTHS OF UNDERGROUND UTILITIES PRIOR TO EXCAVATION OR CONSTRUCTION ACTIVITIES. THE CONTRACTOR SHALL NOTIFY THE APPROPRIATE UTILITY OWNERS, CONDUCT FIELD INVESTIGATIONS, AND CONTACT 811 AS REQUIRED BY LAW BEFORE COMMENCING ANY EXCAVATION WORK.

IF THE CONTRACTOR ENCOUNTERS ANY UNDERGROUND UTILITIES OR STRUCTURES THAT ARE NOT SHOWN ON THE PLANS, ARE INACCURATELY DEPICTED, OR OTHERWISE VARY FROM EXPECTED CONDITIONS, THEY SHALL IMMEDIATELY NOTIFY THE ENGINEER AND THE UTILITY OWNER. NO ADDITIONAL COMPENSATION OR TIME EXTENSIONS WILL BE GRANTED FOR DELAYS OR COSTS INCURRED DUE TO SUCH DISCOVERIES UNLESS OTHERWISE AUTHORIZED BY CONTRACT PROVISIONS.

IT IS THE CONTRACTOR'S SOLE RESPONSIBILITY TO PROTECT ALL UNDERGROUND UTILITIES AND STRUCTURES THROUGHOUT THE DURATION OF CONSTRUCTION. ANY DAMAGE CAUSED TO EXISTING UTILITIES OR STRUCTURES SHALL BE REPAIRED AT THE CONTRACTOR'S EXPENSE AND IN ACCORDANCE WITH THE UTILITY OWNER'S REQUIREMENTS.

LEGEND

- PROPOSED FLOWLINE
- S — PROPOSED SEWER LINE
- SD — PROPOSED STORM DRAIN LINE
- W — PROPOSED WATER LINE
- FW — PROPOSED FIRE WATER LINE
- E — PROPOSED ELECTRICAL LINE (SEE ELECTRICAL PLANS)
- PROPOSED FENCE
- EXISTING RIGHT OF WAY
- EXISTING FENCE
- OHW — EXISTING OVER HEAD WIRE
- E — EXISTING ELECTRICAL LINE
- G — EXISTING GAS LINE
- W — EXISTING WATER LINE
- SD — EXISTING STORM DRAIN LINE
- FW — EXISTING FIREWATER LINE
- S — EXISTING SEWER LINE
- COMM — EXISTING COMMUNICATION LINE
- FOC — EXISTING FIBER OPTIC LINE

SCALE: 1"=20'

811 Know what's below. Call before you dig.

GENERAL NOTE

1. CONTRACTOR TO FURNISH AND INSTALL ALL FITTINGS NECESSARY TO CONSTRUCT UTILITY SYSTEMS AS SHOWN ON PLAN INCLUDING ECCENTRIC TEES/WYES WHERE NEEDED.
2. STORM WATER SHALL NOT BE DRAINED INTO SEWERS INTENDED FOR SANITARY DRAINAGE ONLY. [CPC 1101.3]
3. ALL INLETS AND OUTLETS INTO AND OUT OF MANHOLES SHALL INCORPORATE THE USE OF A FLEXIBLE COMPRESSION JOINT LOCATED BETWEEN 12" AND 36" FROM THE MANHOLE. NO FLEXIBLE COMPRESSION JOINT SHALL BE EMBEDDED IN THE MANHOLE BASE. [CPC 719.6]
4. A TWO-WAY CLEANOUT MUST BE AN APPROVED TYPE AS DEFINED IN THE CPC SECTION 203.0 & PER SECTION 707.4 EXCEPTION (4).

*EXISTING UTILITIES NOTE

LOCATION, SIZE AND DEPTH OF EXISTING UTILITIES SHOWN ARE ESTIMATES ONLY AND WERE BASED ON AS-BUILT PLANS AND OBSERVED SURFACE EVIDENCE. CONTRACTOR TO TO FIELD VERIFY LOCATION, SIZE, DEPTH AND MATERIAL TYPE OF ALL EXISTING UTILITIES PRIOR TO CONSTRUCTION AND NOTIFY ENGINEER OF ANY CONFLICTS.

UTILITY CROSSING NOTES

1. WHERE A DOMESTIC WATER LINE CROSSES A FIRE WATER LINE THE PIPE TO PIPE CLEARANCE SHALL BE 6" MINIMUM. IF NECESSARY USE 45° ELBOWS (AND THRUST BLOCKS FOR PIPE SIZES 4" AND LARGER) ON THE DOMESTIC WATER LINE, 5' ON EITHER SIDE OF THE FIRE WATER LINE TO CROSS THE DOMESTIC WATER LINE OVER THE FIRE WATER LINE TO ACHIEVE THE 6" MINIMUM PIPE TO PIPE CLEARANCE AND 24" MINIMUM COVER OVER THE DOMESTIC WATER LINE.
2. WHERE A DOMESTIC OR FIRE WATER LINE CROSSES A STORM DRAIN LINE THE PIPE TO PIPE CLEARANCE SHALL BE 12" MINIMUM. IF THE WATER LINE MUST BE ADJUSTED TO MEET THE 12" MINIMUM CROSSING CLEARANCE, USE 45° ELBOWS (AND THRUST BLOCKS FOR PIPE SIZES 4" AND LARGER) ON THE WATER LINE, 5' ON EITHER SIDE OF THE STORM DRAIN LINE TO CROSS THE WATER LINE OVER THE STORM DRAIN LINE TO ACHIEVE THE 12" MINIMUM PIPE TO PIPE CLEARANCE AND MAINTAIN 24" MINIMUM COVER OVER THE WATER LINE. IF THERE IS NOT ADEQUATE COVER OVER THE STORM DRAIN LINE TO CONSTRUCT THE WATER LINE ABOVE THE STORM DRAIN LINE, USE 45° ELBOWS (AND THRUST BLOCKS FOR PIPE SIZES 4" AND LARGER) ON THE WATER LINE, 5' ON EITHER SIDE OF THE STORM DRAIN LINE TO CROSS THE WATER LINE UNDER THE STORM DRAIN LINE TO ACHIEVE THE 12" MINIMUM PIPE TO PIPE CLEARANCE. NO PIPE JOINTS WITHIN 5' ON EITHER SIDE OF THE CROSSING.
3. WHERE A DOMESTIC OR FIRE WATER LINE CROSSES A SEWER LINE THE WATER LINE MUST CROSS OVER THE SEWER LINE WITH A MINIMUM PIPE TO PIPE CLEARANCE OF 12".

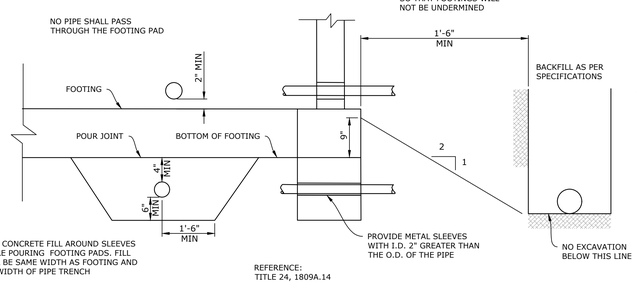

REFERENCE: TITLE 24, 1809A.14

TYPICAL PIPE TRENCH OR DUCT BANK AND FOOTING DETAIL

SCALE: N.T.S.

REVIEWED FOR CODE COMPLIANCE BY: WILLDAN ENGINEERING

Approval of these plans & specifications shall not be construed to be a permit for, or an approval of any violation of any Federal, State, County or City laws or ordinances. One set of approved plans must be kept on the job until completion.

12:12:32 PM Jul 20, 2025

AGENCY

FLEWELLING & MOODY
architecture planning interiors

HEADQUARTERS OFFICE:
99 S. Lake Ave., Suite 300
Pasadena, CA 91101
323.543.8300
E-Mail: fm-pasadena@flewelling-moody.com

ANTELOPE VALLEY OFFICE:
1035 West Lancaster Boulevard
Lancaster, California 93534
661.949.0771
E-Mail: fm-lancaster@flewelling-moody.com

An Employee Owned Corporation

ARCHITECT

CONSULTANT

REGISTERED PROFESSIONAL ENGINEER JUSTIN D. JENISON NO 77454 CIVIL STATE OF CALIFORNIA

ECG Encompass Consultant Group
25115 AVE STANFORD, SUITE A320, SANTA CLARITA, CA 91355
PHONE: 661.600.9367 WEBSITE: WWW.ECGCIVIL.COM

Drawn by

Checked by

Revisions

No.	Date	Description

All dimensions must be checked at the job by the contractor who accepts full responsibility for their accuracy under the contract. These plans & the specifications in connection therewith have been prepared for a specific site. Any and all responsibility for their use in whole or in part on any other site is hereby disclaimed by Flewelling & Moody.

CITY OF RIDGECREST

SGT. JOHN PINNEY MEMORIAL POOL REPLACEMENT

205 S WARNER ST.
RIDGECREST, CA 93555

WET UTILITY PLAN

Job No. 3055-0100

Date 05/02/2025

C4.01

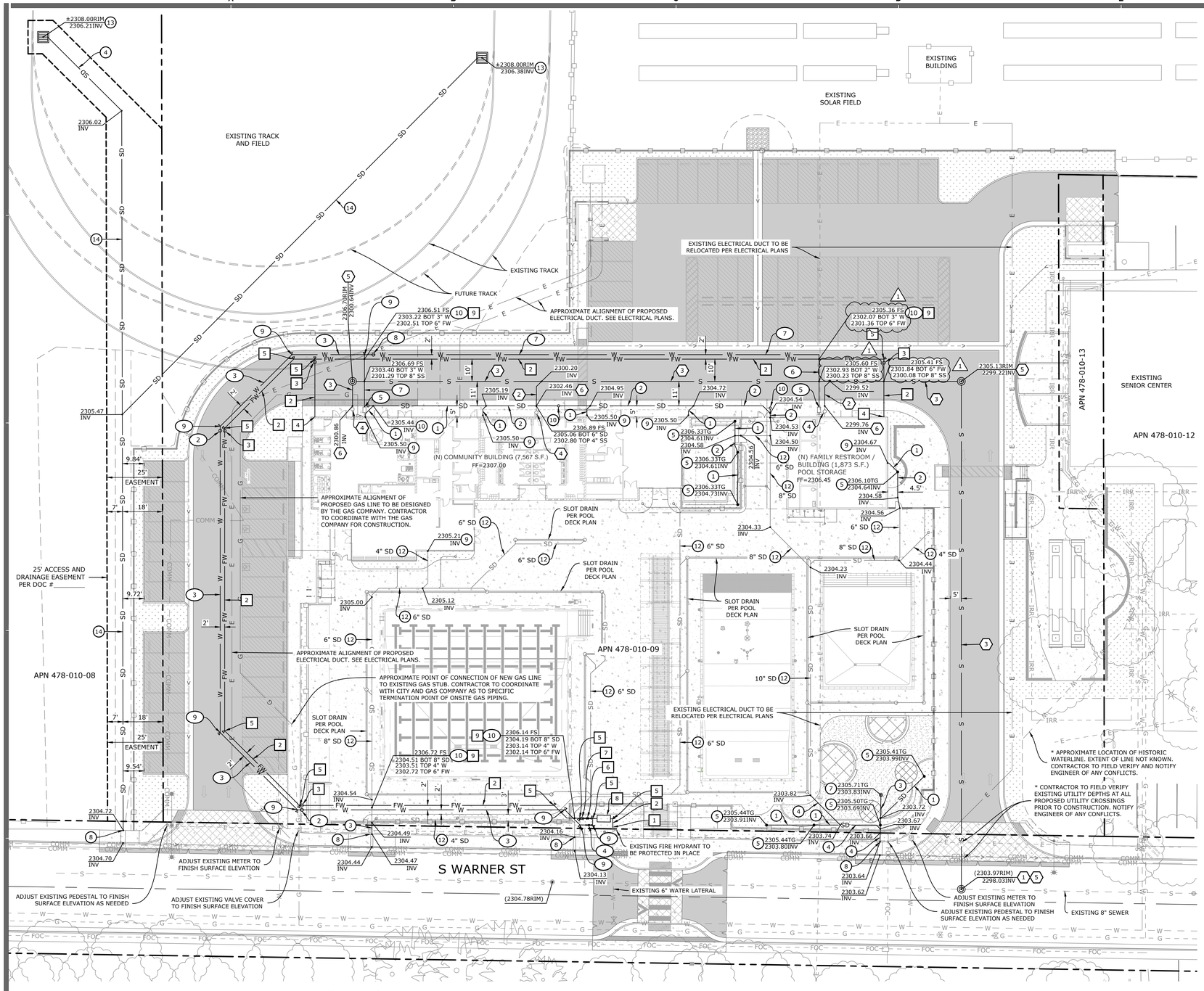

SEWER CONSTRUCTION NOTES

1. CONSTRUCT CONNECTION TO EXISTING 8" SEWER LINE AS SHOWN.
2. CONSTRUCT 4" SDR 35 PVC SANITARY SEWER LINE PER DETAIL "AA" ON SHEET C4.02. MINIMUM 2.0% SLOPE. INSTALL ALL FITTINGS, ELBOWS, WYES AND TEES NECESSARY TO CONSTRUCT SEWER SYSTEM AS SHOWN.
3. CONSTRUCT 8" SDR 35 PVC SANITARY SEWER LINE PER DETAIL "AA" ON SHEET C4.02. MINIMUM 0.52% SLOPE. INSTALL ALL FITTINGS, ELBOWS, WYES AND TEES NECESSARY TO CONSTRUCT SEWER SYSTEM AS SHOWN.
4. CONSTRUCT SANITARY SEWER CLEANOUT PER PLUMBING PLANS.
5. CONSTRUCT SEWER MANHOLE PER CITY OF RIDGECREST STANDARD DETAIL S-1 AND FRAME AND COVER PER CITY OF RIDGECREST STANDARD DETAIL S-2. DETAILS ON SHEET C4.02. EPOXY LINE ALL NEW SEWER MANHOLES.
6. CONSTRUCT CONNECTION TO BUILDING SEWER LINE. SEE PLUMBING PLAN FOR CONTINUATION.

STORM DRAIN CONSTRUCTION NOTES

1. CONSTRUCT 4" SDR 35 PVC PIPE PER DETAIL "AA" ON SHEET C4.02. NSTALL ALL FITTINGS, ELBOWS, WYES AND TEES NECESSARY TO CONSTRUCT STORM DRAIN SYSTEM AS SHOWN.
2. CONSTRUCT 6" SDR 35 PVC PIPE PER DETAIL "AA" ON SHEET C4.02. INSTALL ALL FITTINGS, ELBOWS, WYES AND TEES NECESSARY TO CONSTRUCT STORM DRAIN SYSTEM AS SHOWN.
3. CONSTRUCT 8" SDR 35 PVC PIPE PER DETAIL "AA" ON SHEET C4.02. INSTALL ALL FITTINGS, ELBOWS, WYES AND TEES NECESSARY TO CONSTRUCT STORM DRAIN SYSTEM AS SHOWN.
4. CONSTRUCT 10" SDR 35 PVC PIPE PER DETAIL "AA" ON SHEET C4.02. INSTALL ALL FITTINGS, ELBOWS, WYES AND TEES NECESSARY TO CONSTRUCT STORM DRAIN SYSTEM AS SHOWN.
5. CONSTRUCT 4" SDR 35 PVC PIPE RISER AND 4" ATRIUM GRATE.
6. NOT USED.
7. CONSTRUCT 18" DIAMETER NYLOPLAST DRAIN BASIN WITH STANDARD GRATE OR APPROVED EQUAL.
8. CONSTRUCT CONNECTION OF STORM DRAIN LINE TO PARKWAY DRAIN. SEE GRADING PLANS FOR CONTINUATION.
9. CONSTRUCT CONNECTION TO BUILDING ROOF DRAIN DOWNSPOUT PER ARCHITECT'S PLAN.
10. CONSTRUCT STORM DRAIN CLEANOUT PER CITY OF RIDGECREST STANDARD DETAIL S-3 ON SHEET C4.02 (MODIFIED FOR STORM DRAIN). LID TO READ "STORM".
11. NOT USED.
12. CONSTRUCT STORM DRAIN PER POOL DECK PLAN.
13. CONSTRUCT 48" X 48" PRECAST CONCRETE STORM DRAIN CATCH BASIN WITH STANDARD GRATE.
14. CONSTRUCT 12" SDR 35 PVC PIPE PER DETAIL "AA" ON SHEET C4.02. INSTALL ALL FITTINGS, ELBOWS, WYES AND TEES NECESSARY TO CONSTRUCT STORM DRAIN SYSTEM AS SHOWN.

DOMESTIC WATER CONSTRUCTION NOTES

1. NOT USED.
2. CONSTRUCT 4" GATE VALVE AND VALVE BOX PER INDIAN WELLS VALLEY WATER DISTRICT STANDARD DRAWING P-9 ON SHEET C4.03.
3. CONSTRUCT 4" SCH 80 PVC WATER LINE WITH ALL NECESSARY FITTINGS PER DETAIL "BB" ON SHEET C4.02.
4. CONSTRUCT 4" DOMESTIC WATER REDUCED PRESSURE BACKFLOW PREVENTER ASSEMBLY PER INDIAN WELLS VALLEY WATER DISTRICT STANDARD DRAWING BF-1 ON SHEET C4.03. INSTALL FREEZE PROTECTION BLANKET.
5. CONSTRUCT CONNECTION TO BUILDING WATER LINE. SEE PLUMBING PLANS FOR CONTINUATION.
6. CONSTRUCT 2" SCH 80 PVC WATER LINE WITH ALL NECESSARY FITTINGS PER DETAIL "CC" ON SHEET C4.02.
7. CONSTRUCT 3" SCH 80 PVC WATER LINE WITH ALL NECESSARY FITTINGS PER DETAIL "BB" ON SHEET C4.02.
8. CONSTRUCT 3" GATE VALVE AND VALVE BOX PER INDIAN WELLS VALLEY WATER DISTRICT STANDARD DRAWING P-9 ON SHEET C4.03.
9. CONSTRUCT HORIZONTAL BEND AND CONCRETE THRUST BLOCK PER INDIAN WELLS VALLEY WATER DISTRICT P-6(A-C) ON SHEET C4.03.
10. CONSTRUCT WATER LINE UTILITY CROSSING PER UTILITY CROSSING NOTES HEREON.

FIRE WATER CONSTRUCTION NOTES

1. CONSTRUCT CONNECTION TO EXISTING 6" INDIAN WELLS VALLEY WATER DISTRICT LINE PER INDIAN WELLS VALLEY WATER DISTRICT STANDARD CONSTRUCTION AND SPECIFICATIONS DRAWINGS. SEE WATER CONNECTION DETAIL "DD" ON SHEET C4.02. EXACT LOCATION OF EXISTING WATER LINE IS UNKNOWN. CONTRACTOR TO FIELD VERIFY PRIOR TO CONSTRUCTION AND NOTIFY ENGINEER OF ANY CONFLICTS WITH DESIGN.
2. CONSTRUCT 6" C900 CL 305 (DR 14) PVC FIRE WATER LINE PER DETAIL "BB" ON SHEET C4.02.
3. CONSTRUCT GATE VALVE AND VALVE BOX PER INDIAN WELLS VALLEY WATER DISTRICT STANDARD DRAWING P-9 ON SHEET C4.03.
4. CONSTRUCT CONNECTION TO BUILDING FIRE RISER. SEE FIRE PROTECTION PLANS FOR CONTINUATION.
5. CONSTRUCT HORIZONTAL BEND AND CONCRETE THRUST BLOCK PER INDIAN WELLS VALLEY WATER DISTRICT P-6(A-C) ON SHEET C4.03.
6. CONSTRUCT 6" DOUBLE CHECK DETECTOR ASSEMBLY PER INDIAN WELLS VALLEY WATER DISTRICT STANDARD DRAWING BF-2 ON SHEET C4.03. INSTALL FREEZE PROTECTION BLANKET.
7. CONSTRUCT FIRE DEPARTMENT CONNECTION.
8. CONSTRUCT 6" COMBINED FIRE AND DOMESTIC METER PER INDIAN WELLS VALLEY WATER DISTRICT STANDARD DRAWING P-25 ON SHEET C4.03.
9. CONSTRUCT FIRE WATER LINE UTILITY CROSSING PER UTILITY CROSSING NOTES HEREON.

CAUTION: UNDERGROUND UTILITIES

THE LOCATIONS OF UNDERGROUND UTILITIES AND STRUCTURES SHOWN ON THESE PLANS ARE BASED ON AVAILABLE RECORDS AND LIMITED FIELD INVESTIGATIONS. THE INFORMATION IS PROVIDED FOR REFERENCE ONLY AND SHOULD NOT BE CONSIDERED COMPLETE OR ACCURATE. THE PRESENCE OF ADDITIONAL UNDERGROUND UTILITIES OR STRUCTURES, WHETHER KNOWN OR UNKNOWN, REPORTED OR UNREPORTED, SHOULD BE ANTICIPATED.

BY ACCEPTING THESE PLANS AND PROCEEDING WITH CONSTRUCTION, THE CONTRACTOR ACKNOWLEDGES AND ASSUMES ALL RISKS ASSOCIATED WITH THE EXISTENCE OF UNDERGROUND UTILITIES AND STRUCTURES, INCLUDING THOSE NOT SHOWN OR INACCURATELY DEPICTED ON THE PLANS. THE ENGINEER, OWNER, AND THEIR REPRESENTATIVES, SHALL NOT BE LIABLE FOR ANY DAMAGES, DELAYS, CLAIMS, OR ADDITIONAL COSTS RESULTING FROM UNKNOWN OR INACCURATELY LOCATED UNDERGROUND UTILITIES OR STRUCTURES.

THE CONTRACTOR SHALL TAKE ALL NECESSARY PRECAUTIONS, INCLUDING BUT NOT LIMITED TO POTHOLING, UTILITY COORDINATION, AND COMPLIANCE WITH ALL APPLICABLE LAWS AND REGULATIONS, TO VERIFY THE EXACT LOCATIONS AND DEPTHS OF UNDERGROUND UTILITIES PRIOR TO EXCAVATION OR CONSTRUCTION ACTIVITIES. THE CONTRACTOR SHALL NOTIFY THE APPROPRIATE UTILITY OWNERS, CONDUCT FIELD INVESTIGATIONS, AND CONTACT 811 AS REQUIRED BY LAW BEFORE COMMENCING ANY EXCAVATION WORK.

IF THE CONTRACTOR ENCOUNTERS ANY UNDERGROUND UTILITIES OR STRUCTURES THAT ARE NOT SHOWN ON THE PLANS, ARE INACCURATELY DEPICTED, OR OTHERWISE VARY FROM EXPECTED CONDITIONS, THEY SHALL IMMEDIATELY NOTIFY THE ENGINEER AND THE UTILITY OWNER. NO ADDITIONAL COMPENSATION OR TIME EXTENSIONS WILL BE GRANTED FOR DELAYS OR COSTS INCURRED DUE TO SUCH DISCOVERIES UNLESS OTHERWISE AUTHORIZED BY CONTRACT PROVISIONS.

IT IS THE CONTRACTOR'S SOLE RESPONSIBILITY TO PROTECT ALL UNDERGROUND UTILITIES AND STRUCTURES THROUGHOUT THE DURATION OF CONSTRUCTION. ANY DAMAGE CAUSED TO EXISTING UTILITIES OR STRUCTURES SHALL BE REPAIRED AT THE CONTRACTOR'S EXPENSE AND IN ACCORDANCE WITH THE UTILITY OWNER'S REQUIREMENTS.

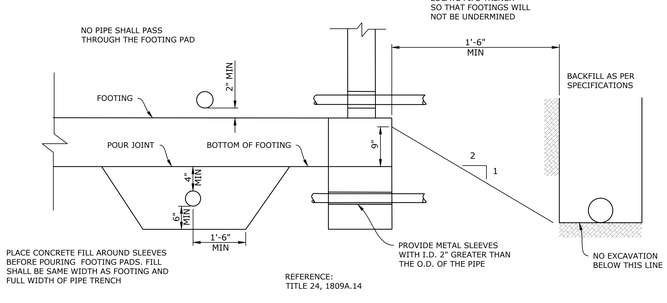

REFERENCE: TITLE 24, 1809A.14

TYPICAL PIPE TRENCH OR DUCT BANK AND FOOTING DETAIL

SCALE: N.T.S.

GENERAL NOTE

1. CONTRACTOR TO FURNISH AND INSTALL ALL FITTINGS NECESSARY TO CONSTRUCT UTILITY SYSTEMS AS SHOWN ON PLAN INCLUDING ECCENTRIC TEES/WYES WHERE NEEDED.
2. STORM WATER SHALL NOT BE DRAINED INTO SEWERS INTENDED FOR SANITARY DRAINAGE ONLY. [CPC 1101.3]
3. ALL INLETS AND OUTLETS INTO AND OUT OF MANHOLES SHALL INCORPORATE THE USE OF A FLEXIBLE COMPRESSION JOINT LOCATED BETWEEN 12" AND 36" FROM THE MANHOLE. NO FLEXIBLE COMPRESSION JOINT SHALL BE EMBEDDED IN THE MANHOLE BASE. [CPC 719.6]
4. A TWO-WAY CLEANOUT MUST BE AN APPROVED TYPE AS DEFINED IN THE CPC SECTION 203.0 & PER SECTION 707.4 EXCEPTION (4).

*EXISTING UTILITIES NOTE

LOCATION, SIZE AND DEPTH OF EXISTING UTILITIES SHOWN ARE ESTIMATES ONLY AND WERE BASED ON AS-BUILT PLANS AND OBSERVED SURFACE EVIDENCE. CONTRACTOR TO TO FIELD VERIFY LOCATION, SIZE, DEPTH AND MATERIAL TYPE OF ALL EXISTING UTILITIES PRIOR TO CONSTRUCTION AND NOTIFY ENGINEER OF ANY CONFLICTS.

UTILITY CROSSING NOTES

1. WHERE A DOMESTIC WATER LINE CROSSES A FIRE WATER LINE THE PIPE TO PIPE CLEARANCE SHALL BE 6" MINIMUM. IF NECESSARY USE 45° ELBOWS (AND THRUST BLOCKS FOR PIPE SIZES 4" AND LARGER) ON THE DOMESTIC WATER LINE, 5' ON EITHER SIDE OF THE FIRE WATER LINE TO CROSS THE DOMESTIC WATER LINE OVER THE FIRE WATER LINE TO ACHIEVE THE 6" MINIMUM PIPE TO PIPE CLEARANCE AND 24" MINIMUM COVER OVER THE DOMESTIC WATER LINE.
2. WHERE A DOMESTIC OR FIRE WATER LINE CROSSES A STORM DRAIN LINE THE PIPE TO PIPE CLEARANCE SHALL BE 12" MINIMUM. IF THE WATER LINE MUST BE ADJUSTED TO MEET THE 12" MINIMUM CROSSING CLEARANCE, USE 45° ELBOWS (AND THRUST BLOCKS FOR PIPE SIZES 4" AND LARGER) ON THE WATER LINE, 5' ON EITHER SIDE OF THE STORM DRAIN LINE TO CROSS THE WATER LINE OVER THE STORM DRAIN LINE TO ACHIEVE THE 12" MINIMUM PIPE TO PIPE CLEARANCE AND MAINTAIN 24" MINIMUM COVER OVER THE WATER LINE. IF THERE IS NOT ADEQUATE COVER OVER THE STORM DRAIN LINE TO CONSTRUCT THE WATER LINE ABOVE THE STORM DRAIN LINE, USE 45° ELBOWS (AND THRUST BLOCKS FOR PIPE SIZES 4" AND LARGER) ON THE WATER LINE, 5' ON EITHER SIDE OF THE STORM DRAIN LINE TO CROSS THE WATER LINE UNDER THE STORM DRAIN LINE TO ACHIEVE THE 12" MINIMUM PIPE TO PIPE CLEARANCE. NO PIPE JOINTS WITHIN 5' ON EITHER SIDE OF THE CROSSING.
3. WHERE A DOMESTIC OR FIRE WATER LINE CROSSES A SEWER LINE THE WATER LINE MUST CROSS OVER THE SEWER LINE WITH A MINIMUM PIPE TO PIPE CLEARANCE OF 12".

LEGEND

- PROPOSED FLOWLINE
- PROPOSED SEWER LINE
- PROPOSED STORM DRAIN LINE
- PROPOSED WATER LINE
- PROPOSED FIRE WATER LINE
- PROPOSED ELECTRICAL LINE (SEE ELECTRICAL PLANS)
- PROPOSED FENCE
- EXISTING RIGHT OF WAY
- EXISTING FENCE
- EXISTING OVER HEAD WIRE
- EXISTING ELECTRICAL LINE
- EXISTING GAS LINE
- EXISTING WATER LINE
- EXISTING STORM DRAIN LINE
- EXISTING FIREWATER LINE
- EXISTING SEWER LINE
- EXISTING COMMUNICATION LINE
- EXISTING FIBER OPTIC LINE

SCALE: 1"=20'
0 20 40 60

811 Know what's below. Call before you dig.

AGENCY

FLEWELLING & MOODY
architecture planning interiors

HEADQUARTERS OFFICE:
99 S. Lake Ave., Suite 300
Pasadena, CA 91101
323.543.8300
E-Mail: fm-pasadena@flewelling-moody.com

ANTELOPE VALLEY OFFICE:
1035 West Lancaster Boulevard
Lancaster, California 93534
661.949.0771
E-Mail: fm-lancaster@flewelling-moody.com

An Employee Owned Corporation

ARCHITECT

CONSULTANT

REGISTERED PROFESSIONAL ENGINEER JUSTIN D. JENSEN NO 77454 CIVIL STATE OF CALIFORNIA

ECG Encompass Consultant Group
25115 AVE STANFORD, SUITE A320, SANTA CLARITA, CA 91355
PHONE: 661.609.9367 WEBSITE: WWW.ECGCIVIL.COM

Drawn by

Checked by

Revisions

No.	Date	Description
1	08/27/2025	BID ALTERNATIVE

All dimensions must be checked at the job by the contractor who accepts full responsibility for their accuracy under the contract. These plans & the specifications in connection therewith have been prepared for a specific site. Any and all responsibility for their use in whole or in part on any other site is hereby disclaimed by Flewelling & Moody.

CITY OF RIDGECREST

SGT. JOHN PINNEY MEMORIAL POOL REPLACEMENT

205 S WARNER ST.
RIDGECREST, CA 93555

WET UTILITY PLAN ALT 4

Job No. 3055-0100

Date 06/25/2025

C4.01A4

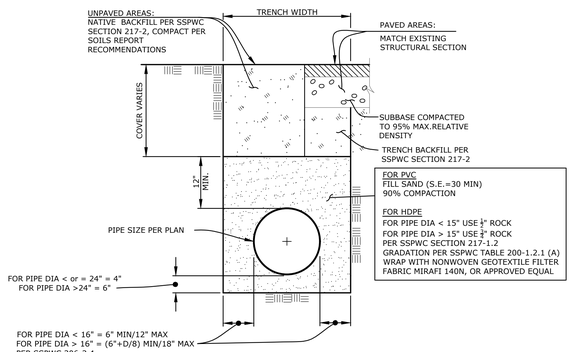

TYPICAL PLASTIC GRAVITY PIPE TRENCH

SCALE: N.T.S.

AA

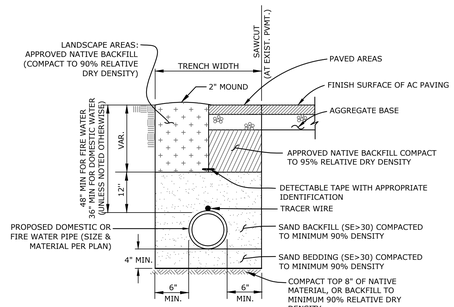

NOTE: CONTRACTOR SHALL VERIFY EXISTING UTILITIES BY POTHOLING PRIOR TO CONSTRUCTION AND NOTIFY THE ENGINEER OF ANY CONFLICTS OR DISCREPANCIES.

TYPICAL PVC WATER OR FIRE WATER TRENCH SECTION (PIPE DIAMETER 3" OR LARGER)

SCALE: N.T.S.

BB

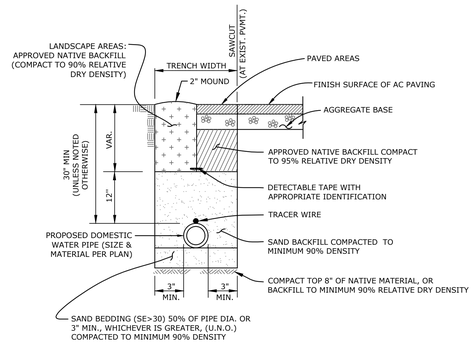

NOTE: CONTRACTOR SHALL VERIFY EXISTING UTILITIES BY POTHOLING PRIOR TO CONSTRUCTION AND NOTIFY THE ENGINEER OF ANY CONFLICTS OR DISCREPANCIES.

POTABLE PVC WATER LINE PIPE TRENCH (DIA < 3")

SCALE: N.T.S.

CC

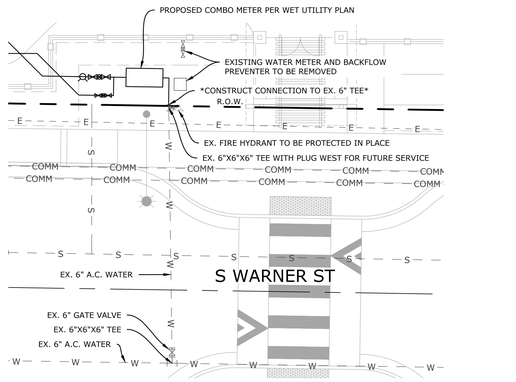

*NOTE: EXISTING WATER LATERAL SIZE, LOCATION AND ORIENTATION ARE ASSUMED BASED ON RECORD DRAWINGS PROVIDED BY INDIAN WELLS VALLEY WATER DISTRICT. CONTRACTOR SHALL VERIFY EXISTING WATERLINE SIZE, LOCATION AND ORIENTATION BY POTHOLING PRIOR TO CONSTRUCTION AND NOTIFY THE ENGINEER OF ANY CONFLICTS OR DISCREPANCIES.

WATER CONNECTION DETAIL

SCALE: N.T.S.

DD

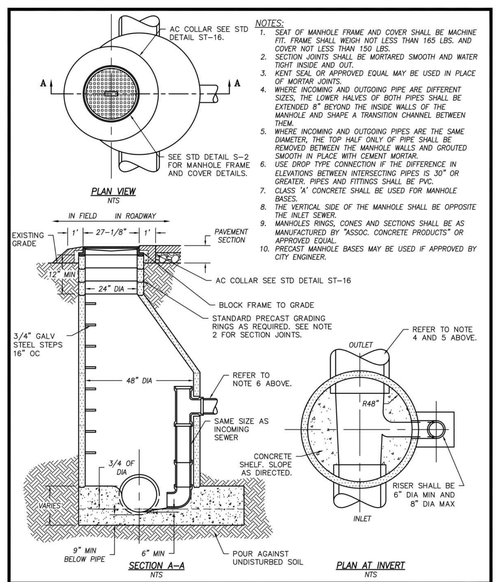

NOTES:
1. SEAT OF MANHOLE FRAME AND COVER SHALL BE MACHINE FIT. FRAME SHALL WEIGH NOT LESS THAN 165 LBS. AND COVER NOT LESS THAN 150 LBS.
2. SECTION JOINTS SHALL BE MORTARED SMOOTH AND WATER TIGHT INSIDE AND OUT.
3. KENT SEAL OR APPROVED EQUAL MAY BE USED IN PLACE OF MORTAR JOINTS.
4. WHERE INCOMING AND OUTGOING PIPE ARE DIFFERENT SIZES, THE LOWER HALVES OF BOTH PIPES SHALL BE EXTENDED 8" BEYOND THE INSIDE WALLS OF THE MANHOLE AND SHAPE A TRANSITION CHANNEL BETWEEN THEM.
5. WHERE INCOMING AND OUTGOING PIPES ARE THE SAME DIAMETER, THE TOP HALF ONLY OF PIPE SHALL BE REMOVED BETWEEN THE MANHOLE WALLS AND GROUTED SMOOTH IN PLACE WITH CEMENT MORTAR.
6. USE DROP TYPE CONNECTION IF THE DIFFERENCE IN ELEVATIONS BETWEEN INTERSECTING PIPES IS 30" OR GREATER. PIPES AND FITTINGS SHALL BE PVC.
7. CLASS 'A' CONCRETE SHALL BE USED FOR MANHOLE BASES.
8. THE VERTICAL SIDE OF THE MANHOLE SHALL BE OPPOSITE THE INLET SEWER.
9. MANHOLE RINGS, CONES AND SECTIONS SHALL BE AS MANUFACTURED BY "ASSOC. CONCRETE PRODUCTS" OR APPROVED EQUAL.
10. PRECAST MANHOLE BASES MAY BE USED IF APPROVED BY CITY ENGINEER.

APPROVED BY:	SCALE: NTS
CITY ENGINEER	CHECKED BY: RG
APPROVED BY CITY COUNCIL:	DATE: 1/3/2023
DATE	PLATE NO: S-1

SEWER MANHOLE

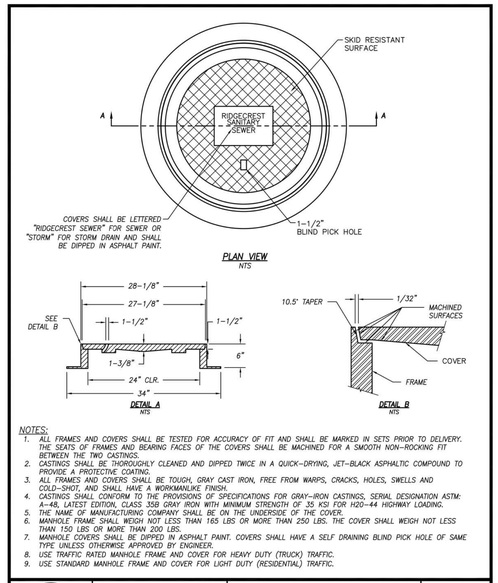

NOTES:
1. ALL FRAMES AND COVERS SHALL BE TESTED FOR ACCURACY OF FIT AND SHALL BE MARKED IN SETS PRIOR TO DELIVERY. THE SEATS OF FRAMES AND BEARING FACES OF THE COVERS SHALL BE MACHINED FOR A SMOOTH NON-ROCKING FIT BETWEEN THE TWO CASTINGS.
2. CASTINGS SHALL BE THOROUGHLY CLEANED AND DIPPED TWICE IN A QUICK-DRYING, JET-BLACK ASPHALTIC COMPOUND TO PROVIDE A PROTECTIVE COATING.
3. ALL FRAMES AND COVERS SHALL BE TOUGH, GRAY CAST IRON, FREE FROM WARPS, CRACKS, HOLES, SWELLS AND COLD-SHOT, AND SHALL HAVE A WORKMANLIKE FINISH.
4. CASTINGS SHALL CONFORM TO THE PROVISIONS OF SPECIFICATIONS FOR GRAY-IRON CASTINGS, SERIAL DESIGNATION ASTM: A-48, LATEST EDITION, CLASS 35B GRAY IRON WITH MINIMUM STRENGTH OF 35 KSI FOR H20-44 HIGHWAY LOADING.
5. THE NAME OF MANUFACTURING COMPANY SHALL BE ON THE UNDERSIDE OF THE COVER.
6. MANHOLE FRAME SHALL WEIGH NOT LESS THAN 165 LBS OR MORE THAN 250 LBS. THE COVER SHALL WEIGH NOT LESS THAN 150 LBS OR MORE THAN 200 LBS.
7. MANHOLE COVERS SHALL BE DIPPED IN ASPHALT PAINT. COVERS SHALL HAVE A SELF DRAINING BLIND PICK HOLE OF SAME TYPE UNLESS OTHERWISE APPROVED BY ENGINEER.
8. USE TRAFFIC RATED MANHOLE FRAME AND COVER FOR HEAVY DUTY (TRUCK) TRAFFIC.
9. USE STANDARD MANHOLE FRAME AND COVER FOR LIGHT DUTY (RESIDENTIAL) TRAFFIC.

APPROVED BY:	SCALE: NTS
CITY ENGINEER	CHECKED BY: RG
APPROVED BY CITY COUNCIL:	DATE: 1/3/2023
DATE	PLATE NO: S-2

MANHOLE FRAME AND COVER

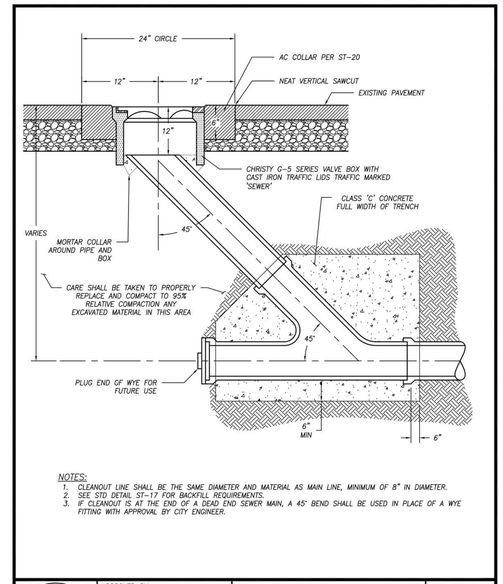

NOTES:
1. CLEANOUT LINE SHALL BE THE SAME DIAMETER AND MATERIAL AS MAIN LINE, MINIMUM OF 8" IN DIAMETER.
2. SEE STD DETAIL ST-17 FOR BACKFILL REQUIREMENTS.
3. IF CLEANOUT IS AT THE END OF A DEAD END SEWER MAIN, A 45° BEND SHALL BE USED IN PLACE OF A WYE FITTING WITH APPROVAL BY CITY ENGINEER.

APPROVED BY:	SCALE: NTS
CITY ENGINEER	CHECKED BY: RG
APPROVED BY CITY COUNCIL:	DATE: 1/3/2023
DATE	PLATE NO: S-3

SEWER CLEANOUT

REVIEWED FOR CODE COMPLIANCE BY: WILLDAN ENGINEERING

Approval of these plans & specifications shall not be construed to be a permit for, or an approval of any violation of any Federal, State, County or City laws or ordinances. One set of approved plans must be kept on the job until completion.

12:12:33 PM Jul 20, 2025

811 Know what's below. Call before you dig.

AGENCY

FLEWELLING & MOODY
architecture planning interiors

HEADQUARTERS OFFICE:
99 S. Lake Ave., Suite 300
Pasadena, CA 91101
323.543.8300
E-Mail: fm-pasadena@flewelling-moody.com

ANTELOPE VALLEY OFFICE:
1035 West Lancaster Boulevard
Lancaster, California 93534
661.949.0771
E-Mail: fm-lancaster@flewelling-moody.com

An Employee Owned Corporation

ARCHITECT

CONSULTANT

REGISTERED PROFESSIONAL ENGINEER JOSIAH D. JENSON NO 77454 CIVIL STATE OF CALIFORNIA

ECG Encompass Consultant Group
25115 AVE STANFORD, SUITE #320, SANTA CLARITA, CA 91355
PHONE: 661.600.9367 WEBSITE: WWW.ECGCIVIL.COM

Drawn by

Checked by

Revisions

No.	Date	Description

All dimensions must be checked at the job by the contractor who accepts full responsibility for their accuracy under the contract. These plans & the specifications in connection therewith have been prepared for a specific site. Any and all responsibility for their use in whole or in part on any other site is hereby disclaimed by Flewelling & Moody.

CITY OF RIDGECREST

SGT. JOHN PINNEY MEMORIAL POOL REPLACEMENT

205 S WARNER ST.
RIDGECREST, CA 93555

WET UTILITY DETAILS

Job No.
3055-0100

Date
05/02/2025

C4.02

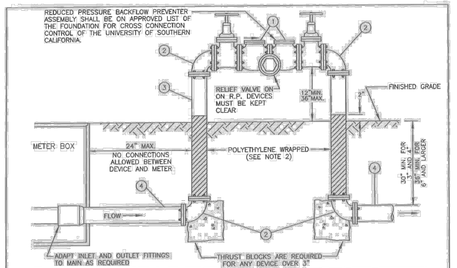

ITEM	No. REQ'D.	DESCRIPTION	APPROVED MATERIALS LIST No.
1	1	DOUBLE CHECK VALVE AND REDUCED PRESSURE BACKFLOW PREVENTION ASSEMBLY.	G-01
2	4	DUCTILE IRON FLANGED 90° ELL – SIZE AS REQUIRED.	D-01
3	VARIES	DUCTILE IRON PIPE OR 10 GA. CML/CMC WSP.	D-03
4	2	2" AND BELOW MUST BE BRASS OR COPPER PIPE, 3"+ MUST BE DUCTILE IRON PIPE.	N/A

NOTES:
1) ALL FITTINGS ON ASSEMBLY SHALL BE FLANGED.
2) DUCTILE IRON, COPPER, AND BRASS PIPE SHALL BE POLYETHYLENE WRAPPED WITH A 2" WIDE PLASTIC BACKED ADHESIVE TAPE, 60% LAPPED.
3) DUCTILE IRON PIPE AND FITTINGS SHALL BE CEMENT MORTAR LINED.
4) ALL EXPOSED PIPING SHALL BE PAINTED PER DISTRICT APPROVED PAINT SYSTEM.
5) OWNER OF DEVICE MUST HAVE BACKFLOW DEVICE TESTED BY THE DISTRICT AT INSTALLATION AND ANNUALLY THEREAFTER BY A STATE CERTIFIED TESTER.
6) UNDER NO CIRCUMSTANCES MAY A BYPASS BE CONSTRUCTED AROUND A BACKFLOW PREVENTION DEVICE.
7) IF INTERRUPTION OF WATER SERVICE TO FACILITY IS NOT PERMISSIBLE, TWO (2) IDENTICAL BACKFLOW PREVENTION DEVICES SHALL BE INSTALLED TO ALLOW TESTING AND SERVICE.
8) DEVICE MUST BE INSULATED OR COVERED TO PROTECT AGAINST FREEZING. (ACCESS FOR TESTING AND ACCESS TO TEST COCKS MUST BE MAINTAINED.)
9) SPRAY OR PAINT STEEL, CAST IRON, BRONZE AND OTHER METALLIC COMPONENTS (INCLUDING NUTS AND BOLTS) WITH A THICK COAT OF AN APPROVED BITUMASTIC. REPLACE ALL REMOVED WRAP OR COATING TO A THICKNESS, DENSITY, AND QUALITY EQUAL TO OR BETTER THAN THE ORIGINAL COATING.

INDIAN WELLS VALLEY WATER DISTRICT

Renee E. Marquecho R.C.E. 79344	REDUCED PRESSURE BACKFLOW PREVENTER	STANDARD DRAWING BF-1
CHIEF ENGINEER APPROVED March 12, 2012 DATE		

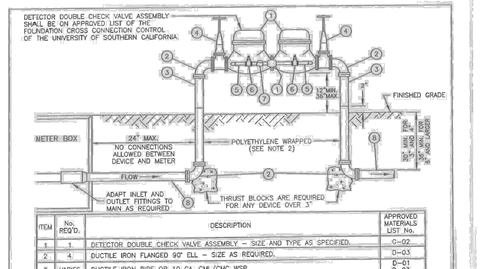

ITEM	No. REQ'D.	DESCRIPTION	APPROVED MATERIALS LIST No.
1	1	DETECTOR DOUBLE CHECK VALVE ASSEMBLY – SIZE AND TYPE AS SPECIFIED.	C-02
2	4	DUCTILE IRON FLANGED 90° ELL – SIZE AS REQUIRED.	D-03
3	VARIES	DUCTILE IRON PIPE OR 10 GA. CML/CMC WSP.	D-01 D-03
4	2	G.S. & "I" GATE VALVE – SIZE AS SPECIFIED.	B-01
5	VARIES	STANDARD WEIGHT BRASS PIPE AND FITTINGS, 3/4" FOR 4", 6", AND 8" DETECTOR CHECKS AND 1" FOR 10" DETECTOR CHECK.	G-02
6	1	BALL VALVE, 3/4" FOR 4", 6", AND 8" DETECTOR CHECKS AND 1" FOR 10" DETECTOR CHECK.	B-16 B-15
7	1	METER – SIZE AND TYPE AS SPECIFIED	N/A
8	2	2" AND BELOW MUST BE BRASS OR COPPER PIPE, 3"+ MUST BE DUCTILE IRON PIPE.	N/A

NOTES:
1) ALL FITTINGS ON ASSEMBLY SHALL BE THREADED.
2) DUCTILE IRON, COPPER, AND BRASS PIPE SHALL BE POLYETHYLENE WRAPPED WITH A 2" WIDE PLASTIC BACKED ADHESIVE TAPE, 60% LAPPED.
3) DUCTILE IRON PIPE AND FITTINGS SHALL BE CEMENT MORTAR LINED.
4) ALL EXPOSED PIPING SHALL BE PAINTED PER DISTRICT APPROVED PAINT SYSTEM.
5) OWNER OF DEVICE MUST HAVE BACKFLOW DEVICE TESTED BY THE DISTRICT AT INSTALLATION AND ANNUALLY THEREAFTER BY A STATE CERTIFIED TESTER.
6) UNDER NO CIRCUMSTANCES MAY A BYPASS BE CONSTRUCTED AROUND A BACKFLOW PREVENTION DEVICE.
7) IF INTERRUPTION OF WATER SERVICE TO FACILITY IS NOT PERMISSIBLE, TWO (2) IDENTICAL BACKFLOW PREVENTION DEVICES SHALL BE INSTALLED TO ALLOW TESTING AND SERVICE.
8) DEVICE MUST BE INSULATED OR COVERED TO PROTECT AGAINST FREEZING. (ACCESS FOR TESTING AND ACCESS TO TEST COCKS MUST BE MAINTAINED.)
9) AT THE DIRECTION OF THE DISTRICT, CONTRACTOR SHALL INSTALL DETECTOR DOUBLE CHECK VALVE ASSEMBLY IN A VAULT PER STD. DWG. P-24.
10) SPRAY OR PAINT STEEL, CAST IRON, BRONZE AND OTHER METALLIC COMPONENTS (INCLUDING NUTS AND BOLTS) WITH A THICK COAT OF AN APPROVED BITUMASTIC. REPLACE ALL REMOVED WRAP OR COATING TO A THICKNESS, DENSITY, AND QUALITY EQUAL TO OR BETTER THAN THE ORIGINAL COATING.

INDIAN WELLS VALLEY WATER DISTRICT

Renee E. Marquecho R.C.E. 79344	DETECTOR DOUBLE CHECK VALVE ASSEMBLY	STANDARD DRAWING BF-2
CHIEF ENGINEER APPROVED March 12, 2012 DATE		

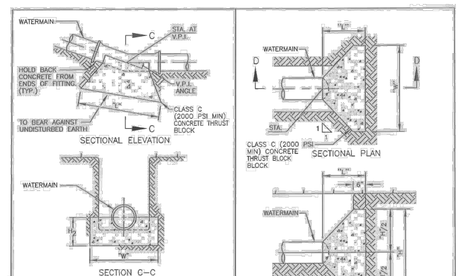

PIPE DIA.	"W"	"H"	"L"	V.P.I. ANGLE
4",6"& 8"	2'-0"	1'-0"	3'-0"	5°–20°
	3'-0"	1'-0"	3'-0"	21°–40°
	5'-0"	1'-0"	3'-0"	41°–60°
10"& 12"	2'-0"	1'-0"	3'-0"	5°–20°
	3'-0"	1'-0"	3'-0"	21°–40°
	5'-0"	1'-0"	3'-6"	41°–60°
14"& 16"	2'-0"	1'-0"	3'-0"	5°–20°
	3'-0"	1'-0"	3'-6"	21°–40°
	5'-0"	1'-0"	4'-6"	41°–60°
18"& 20"	3'-0"	1'-6"	5'-0"	5°–20°
	4'-0"	1'-6"	5'-0"	21°–40°
	5'-0"	1'-6"	5'-0"	41°–60°
24"	3'-0"	2'-0"	5'-0"	5°–20°
	4'-0"	2'-0"	5'-0"	21°–40°
	5'-0"	2'-0"	5'-0"	41°–60°
27"	3'-0"	2'-0"	5'-0"	5°–20°
	4'-0"	2'-0"	5'-0"	21°–40°
	5'-0"	2'-0"	6'-0"	41°–60°
30"	3'-0"	2'-6"	5'-0"	5°–20°
	4'-0"	2'-6"	5'-0"	21°–40°
	5'-0"	2'-6"	6'-0"	41°–60°
33"	4'-0"	3'-0"	6'-0"	5°–20°
	4'-6"	3'-0"	6'-0"	21°–40°
	5'-0"	3'-0"	6'-0"	41°–60°
36"	4'-0"	3'-0"	6'-0"	5°–20°
	4'-6"	3'-0"	6'-0"	21°–40°
	5'-0"	3'-6"	6'-0"	41°–60°

NOTES
1) THRUST BLOCKS SHOWN HEREON ARE APPLICABLE TO WSP, ACP, PVC, AND DIP INSTALLATIONS.
2) NO MIXING OF CONCRETE IN DITCH.

PIPE DIA.	"H"	"L"	"W"
4"	2'-0"	1'-0"	2'-4"
6"	2'-0"	1'-0"	2'-6"
8"	2'-6"	1'-0"	2'-8"
10"	3'-0"	1'-0"	2'-10"
12"	3'-3"	1'-0"	3'-0"
14"	3'-0"	1'-0"	3'-2"
16"	4'-3"	1'-0"	3'-4"
18"	4'-6"	1'-0"	3'-6"
20"	5'-0"	1'-0"	3'-8"
24"	5'-3"	1'-0"	4'-0"
27"	5'-6"	1'-0"	4'-3"
30"	6'-0"	1'-0"	4'-6"
33"	6'-3"	1'-0"	4'-9"
36"	6'-3"	1'-0"	5'-0"

INDIAN WELLS VALLEY WATER DISTRICT

Renee E. Marquecho R.C.E. 79344	THRUST BLOCK DETAIL (CLASS 235 OR LESS)	STANDARD DRAWING P-6A
CHIEF ENGINEER APPROVED March 12, 2012 DATE		

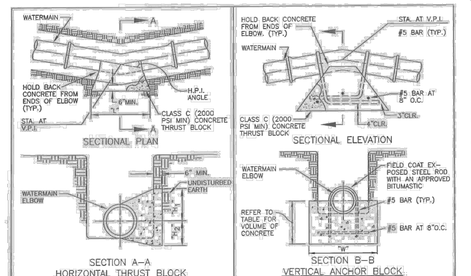

PIPE DIA.	"H1"	"H2"	"L"	H.P.I.
4",6"& 8"	2'-0"	1'-0"	4'-0"	5°–20°
	2'-0"	1'-0"	4'-0"	41°–90°
	3'-0"	1'-0"	4'-0"	5°–60°
10"& 12"	2'-0"	1'-0"	4'-0"	61°–90°
	3'-0"	1'-0"	5'-0"	5°–60°
14"& 16"	2'-0"	1'-0"	5'-0"	61°–90°
	3'-0"	1'-6"	5'-0"	5°–60°
18"& 20"	3'-0"	1'-6"	6'-0"	61°–90°
	3'-0"	1'-6"	6'-0"	5°–30°
24"	3'-0"	2'-0"	6'-0"	31°–60°
	4'-0"	2'-0"	10'-0"	61°–90°
27"	3'-0"	1'-6"	6'-0"	5°–30°
	4'-0"	2'-0"	8'-0"	31°–60°
	4'-0"	2'-0"	10'-0"	61°–90°
30"	4'-0"	2'-0"	8'-0"	5°–30°
	4'-0"	2'-0"	10'-0"	31°–60°
33"	4'-0"	2'-0"	8'-0"	5°–30°
	4'-0"	2'-0"	10'-0"	31°–60°
36"	4'-0"	2'-0"	8'-0"	5°–30°
	5'-0"	2'-6"	12'-0"	31°–60°
	5'-0"	2'-6"	12'-0"	61°–90°

NOTES:
1) THRUST BLOCKS SHOWN HEREON ARE APPLICABLE TO WSP, ACP, PVC & DIP INSTALLATIONS.
2) NO MIXING OF CONCRETE IN DITCH

PIPE DIA.	"W"	VOL. C.Y.	GRADE % DIFF.
4",6"& 8"	2'-0"	19.0	5°–20°
	2'-0"	28.0	21°–40°
	2'-0"	40.0	41°–60°
10"& 12"	2'-0"	20.0	5°–20°
	2'-0"	35.0	21°–40°
	2'-0"	50.0	41°–60°
14"& 16"	3'-0"	26.0	5°–20°
	3'-0"	53.0	21°–40°
	3'-0"	80.0	41°–60°
18"& 20"	3'-0"	33.0	5°–20°
	3'-6"	60.0	21°–40°
	3'-6"	85.0	41°–60°
24"	4'-0"	54.0	5°–20°
	4'-0"	80.0	21°–40°
	4'-0"	126.0	41°–60°
27"	4'-0"	63.0	5°–20°
	4'-6"	108.0	21°–40°
	4'-6"	153.0	41°–60°
30"	5'-0"	72.0	5°–20°
	5'-0"	126.0	21°–40°
	5'-0"	180.0	41°–60°
33"	5'-6"	81.0	5°–20°
	5'-6"	144.0	21°–40°
	5'-6"	207.0	41°–60°
36"	6'-0"	90.0	5°–20°
	6'-0"	162.0	21°–40°
	6'-0"	234.0	41°–60°

INDIAN WELLS VALLEY WATER DISTRICT

Renee E. Marquecho R.C.E. 79344	THRUST BLOCK DETAIL (CLASS 235 OR LESS)	STANDARD DRAWING P-6B
CHIEF ENGINEER APPROVED March 12, 2012 DATE		

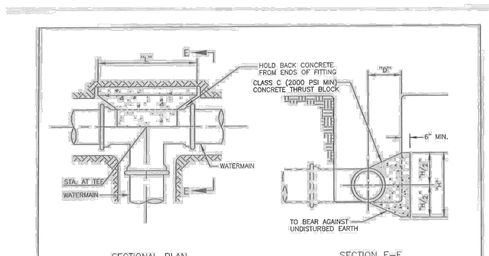

TEE THRUST BLOCK

PIPE DIA.*	"H"	"L"	"D"
4"	2'-0"	2'-4"	1'-0"
6"	2'-0"	2'-6"	1'-0"
8"	2'-6"	2'-8"	1'-0"
10"	3'-0"	2'-10"	1'-0"
12"	3'-3"	3'-0"	1'-4"
14"	3'-10"	4'-2"	1'-6"
16"	4'-3"	4'-3"	1'-6"
18"	4'-6"	4'-10"	1'-10"
20"	5'-0"	5'-8"	2'-0"
24"	5'-3"	6'-0"	2'-0"
27"	5'-6"	6'-3"	2'-0"
30"	5'-9"	6'-6"	2'-0"
33"	6'-0"	6'-9"	2'-0"
36"	6'-3"	7'-0"	2'-0"

* OUTLET PIPE DIAMETER

NOTES
1) THRUST BLOCK SHOWN HEREON IS APPLICABLE TO WSP, ACP, FVC AND DIP INSTALLATIONS.
2) HOLD CONCRETE BACK FROM BOLTS ON CROSSES, TEES, VALVES, AND ELBOWS USING PLASTIC SHEETING BETWEEN BOLTS AND CONCRETE.

INDIAN WELLS VALLEY WATER DISTRICT

Renee E. Marquecho R.C.E. 79344	THRUST BLOCK DETAIL (CLASS 235 OR LESS)	STANDARD DRAWING P-6C
CHIEF ENGINEER APPROVED March 12, 2012 DATE		

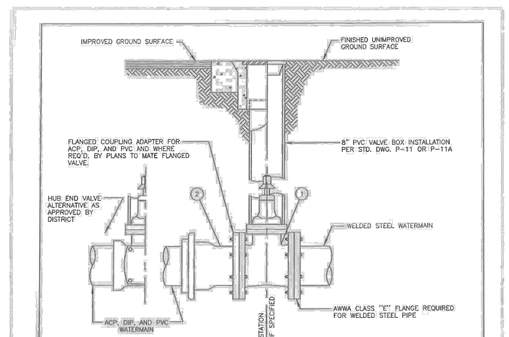

ITEM	NO. REQ'D.	DESCRIPTION	APPROVED MATERIALS LIST No.
1	1	AWWA C509 GATE VALVE WITH DUCTILE IRON BODY AND RESILIENT SEAT. VALVE STEM SHALL BE NON–RISING WITH 2" SQUARE OPERATING NUT AND SHALL TURN COUNTER–CLOCKWISE TO OPEN. VALVES SHALL HAVE "O" RING SEALS AND NON–SHOCK COLD WATER WORKING PRESSURE OF 200 P.S.I.	B-01
2	1	FLANGED COUPLING ADAPTER REQUIRED FOR ACP, DIP AND PVC WATERMAIN.	H-02
—	—	FLANGE BOLTS, NUTS, AND GASKETS AS REQUIRED	H-04 H-06-2

NOTES
1) SPRAY OR PAINT STEEL, CAST IRON, BRONZE AND OTHER METALLIC COMPONENTS (INCLUDING NUTS AND BOLTS) WITH A THICK COAT OF AN APPROVED BITUMASTIC. REPLACE ALL REMOVED WRAP OR COATING TO A THICKNESS, DENSITY, AND QUALITY EQUAL TO OR BETTER THAN THE ORIGINAL COATING.

INDIAN WELLS VALLEY WATER DISTRICT

Renee E. Marquecho R.C.E. 79344	GATE VALVE INSTALLATION DETAIL (WATERMAIN DIAMETER SMALLER THAN 12")	STANDARD DRAWING P-9
CHIEF ENGINEER APPROVED March 12, 2012 DATE		

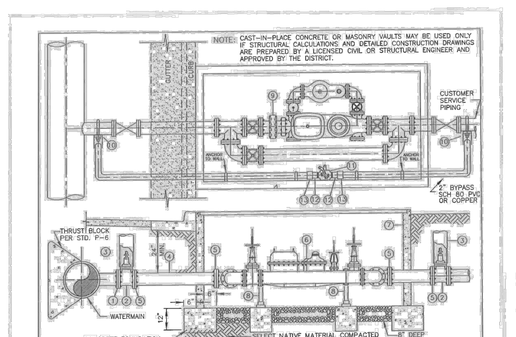

ITEM	NO. REQ'D.	DESCRIPTION	APPROVED MATERIALS LIST No.
1	1	FLANGED SIDE OUTLET ON STEEL WATERMAIN OR HUB x HUB x FLG'D DIP TEE ON DIP, AND PVC WATERMAINS. SIZE AS SPECIFIED.	—
2	1	FLANGED GATE VALVE PER STD. DWG. P–9 OR BUTTERFLY VALVE PER STD. DWG. P–10.	—
3	1	VALVE BOX INSTALLATION PER STD. DWG. P–11 OR P–11A.	—
4	VARIES	STANDARD STEEL PIPE CML & CMC, SIZE AS SPECIFIED.	D-02
5	4	AWWA CLASS "E" FLANGE (REDUCING FLANGE OR REDUCER IF REQUIRED)	C-01-1/C-02
6	1	COMBINED FIRE AND DOMESTIC SERVICE METER WITH BYPASS. SIZE AS SPECIFIED.	H-15-3
7	VARIES	PRECAST CONCRETE PARKWAY VAULT WITH REMOVABLE STEEL COVER WITH READING LID OVER METER REGISTER. VAULT COVER AND PIPING WITHIN VAULT TO BE PAINTED PER DISTRICT APPROVED PAINT SYSTEM.	E-03
8	VARIES	PIPE SUPPORT PER STD. DWG. P–16.	—
9	VARIES	STRAINER, SIZED ACCORDING TO INLET OF METER.	—
10	2	CONNECTIONS PER STD. DWG. P–17	—
11	1	2 INCH WING LOCK BALL VALVE (LEAD FREE).	B-17
12	2	2 INCH I.P.T. BRASS NIPPLE	D-06
13	2	2 INCH FEMALE THREAD BY SLIP FITTING	—
—	—	FLANGE BOLTS, NUTS, AND GASKETS AS REQUIRED.	H-04 H-06-2

NOTE: METER REGISTER MUST BE DIRECT READ IN CUBIC FEET AND APPROVED BY THE DISTRICT.

INDIAN WELLS VALLEY WATER DISTRICT

Renee E. Marquecho R.C.E. 79344	COMBINED FIRE AND DOMESTIC SERVICE INSTALLATION DETAIL (4", 6", AND 8" SERVICE)	STANDARD DRAWING P-25
CHIEF ENGINEER APPROVED March 12, 2012 DATE		

REVIEWED FOR CODE COMPLIANCE BY: WILLDAN ENGINEERING

Approval of these plans & specifications shall not be construed to be a permit for, or an approval of any violation of any Federal, State, County or City laws or ordinances. One set of approved plans must be kept on the job until completion.

12:12:34 PM Jul 20, 2025

Know what's below. Call before you dig.

AGENCY

FLEWELLING & MOODY
architecture planning interiors

HEADQUARTERS OFFICE:
99 S. Lake Ave., Suite 300
Pasadena, CA 91101
323.543.8300
E-Mail: fm-pasadena@flewelling-moody.com

ANTELOPE VALLEY OFFICE:
1035 West Lancaster Boulevard
Lancaster, California 93534
661.949.0771
E-Mail: fm-lancaster@flewelling-moody.com

An Employee Owned Corporation

ARCHITECT

CONSULTANT

REGISTERED PROFESSIONAL ENGINEER JOSTAL D. JENSON NO 77454 CIVIL STATE OF CALIFORNIA

ECG
Encompass Consultant Group
25115 AVE STANFORD, SUITE A335, SANTA CLARITA, CA 91355
PHONE: 661.600.9367 WEBSITE: WWW.ECGCIVIL.COM

Drawn by

Checked by

Revisions

No.	Date	Description

All dimensions must be checked at the job by the contractor who accepts full responsibility for their accuracy under the contract. These plans & the specifications in connection therewith have been prepared for a specific site. Any and all responsibility for their use in whole or in part on any other site is hereby disclaimed by Flewelling & Moody.

CITY OF RIDGECREST

SGT. JOHN PINNEY MEMORIAL POOL REPLACEMENT

205 S WARNER ST.
RIDGECREST, CA 93555

WET UTILITY DETAILS

Job No.
3055-0100

Date
05/02/2025

C4.03

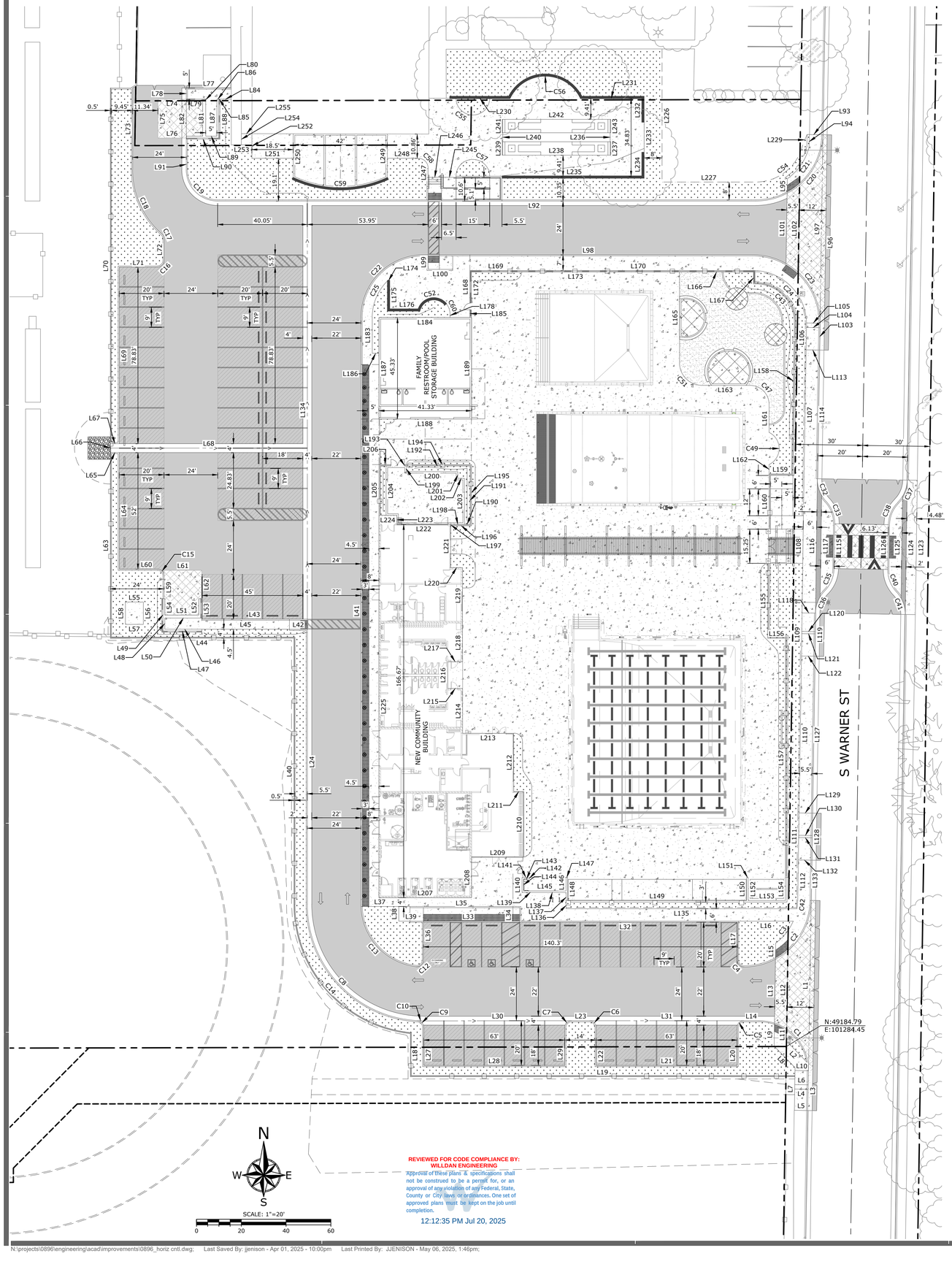

REVIEWED FOR CODE COMPLIANCE BY:
WILLDAN ENGINEERING

Approval of these plans & specifications shall not be construed to be a permit for, or an approval of any violation of any Federal, State, County or City laws or ordinances. One set of approved plans must be kept on the job until completion.

12:12:35 PM Jul 20, 2025

LINE TABLE				
LINE	LENGTH	DIRECTION	START N	START E
L1	76.04	N0° 54' 17"E	49173.95	101294.30
L2	13.00	N44° 07' 34"W	49177.85	101293.53
L3	17.65	S1° 10' 07"W	49173.84	101294.30
L4	5.98	S88° 47' 04"E	49165.79	101288.15
L5	5.93	S89° 05' 25"E	49156.29	101288.01
L6	5.98	S88° 47' 04"E	49167.79	101288.19
L7	19.05	N0° 52' 26"E	49156.29	101288.01
L8	13.44	N44° 07' 34"W	49175.34	101288.30
L9	10.23	N0° 52' 26"E	49184.98	101278.95
L10	6.02	S88° 47' 04"E	49174.08	101288.28
L11	5.38	N0° 52' 26"E	49187.18	101284.48
L12	35.02	N0° 52' 26"E	49192.56	101284.56
L13	28.57	N0° 52' 26"E	49195.21	101279.10
L14	6.72	N90° 00' 00"E	49196.29	101265.45
L15	7.13	N0° 52' 26"E	49223.77	101279.54
L16	24.46	N90° 00' 00"W	49240.79	101287.54
L17	17.00	N0° 00' 00"E	49223.29	101262.59
L18	19.24	S0° 00' 00"E	49190.52	101116.45
L19	171.80	N90° 00' 00"E	49171.29	101116.45
L20	17.00	N0° 00' 00"E	49176.29	101262.45
L21	63.00	N90° 00' 00"E	49176.29	101199.45
L22	17.00	S0° 00' 00"E	49193.29	101199.45
L23	8.18	N90° 00' 00"E	49196.29	101188.45
L24	127.41	S0° 00' 00"E	49375.62	101070.45
L27	17.00	S0° 00' 00"E	49193.29	101122.45
L28	63.00	N90° 00' 00"E	49176.29	101122.45
L29	17.00	N0° 00' 00"E	49176.29	101185.45
L30	65.94	N89° 55' 50"E	49196.21	101122.51
L31	68.82	N90° 00' 00"E	49196.29	101196.63
L32	100.30	N90° 00' 00"W	49240.29	101262.59
L33	40.00	N90° 00' 00"E	49240.79	101122.29
L34	6.50	N0° 00' 00"E	49240.29	101162.29
L35	46.00	N90° 00' 00"W	49246.79	101162.29
L36	17.38	N0° 00' 00"E	49223.41	101122.29
L37	16.83	N90° 00' 00"E	49247.29	101094.46
L38	6.50	S0° 00' 00"E	49247.29	101111.29
L39	11.00	N90° 00' 00"E	49240.79	101111.29
L40	118.91	N0° 00' 00"E	49248.21	101064.45
L41	262.08	S0° 00' 00"E	49510.29	101094.45
L42	8.00	N90° 00' 00"E	49371.12	101062.45
L43	47.17	N90° 00' 00"E	49375.62	101023.28
L44	82.00	N90° 00' 00"E	49367.12	100982.45
L45	39.17	N90° 00' 00"E	49371.12	101023.28
L46	16.50	N90° 00' 00"E	49371.12	101006.78
L47	17.33	N90° 00' 00"E	49370.29	101005.95
L48	5.00	N0° 00' 00"E	49371.12	101006.78
L49	14.50	S0° 00' 00"E	49384.79	101005.95
L50	16.50	N90° 00' 00"E	49376.12	101006.78
L51	15.17	N90° 00' 00"E	49377.46	101006.78
L52	6.83	N0° 00' 00"E	49377.46	101021.95
L53	9.17	N0° 00' 00"E	49375.62	101023.28
L54	6.83	N0° 00' 00"E	49377.46	101006.78
L55	8.00	N90° 00' 00"E	49383.29	100989.20
L56	10.00	S0° 00' 00"E	49383.29	100997.20
L57	8.00	N90° 00' 00"W	49373.29	100997.20
L58	10.00	N0° 00' 00"E	49373.29	100989.20
L59	10.17	S0° 00' 00"E	49394.96	101006.45
L60	17.00	N90° 00' 00"E	49397.96	100986.45
L61	16.83	S89° 59' 57"E	49397.45	101006.45
L62	12.66	S0° 00' 00"E	49397.45	101023.28
L63	82.83	S0° 00' 00"E	49449.96	100982.45
L64	52.00	S0° 00' 00"E	49449.96	100986.45
L65	4.00	N90° 00' 00"W	49449.96	100986.45
L66	4.00	S0° 00' 00"E	49453.96	100982.45
L67	4.00	N90° 00' 00"W	49453.96	100986.45
L68	88.00	S90° 00' 00"E	49451.96	100982.44
L69	78.83	S0° 00' 00"E	49532.79	100986.45
L70	158.83	N0° 00' 00"E	49453.96	100982.45
L71	17.00	N90° 00' 00"E	49532.79	100986.45
L72	9.60	N0° 00' 00"E	49535.79	101006.45
L73	36.40	N0° 00' 00"E	49576.39	100992.40
L74	12.66	N90° 00' 00"W	49607.79	101016.40
L75	17.38	S0° 00' 00"E	49607.79	101003.73
L76	12.66	N89° 46' 44"E	49590.41	101003.73
L77	20.10	N90° 00' 00"E	49612.79	101016.40
L78	5.00	S0° 00' 00"E	49612.79	101016.40
L79	8.67	N90° 00' 00"W	49607.79	101025.06
L80	0.50	S0° 00' 00"W	49607.79	101025.06
L81	16.00	N0° 00' 00"E	49591.29	101025.06
L82	17.33	S0° 00' 00"E	49607.79	101016.40
L84	5.10	N90° 00' 00"E	49607.79	101031.40
L85	0.50	N90° 00' 00"W	49607.79	101031.40
L86	0.83	N90° 00' 00"E	49607.79	101030.06
L87	16.50	N0° 00' 00"E	49591.29	101030.06
L88	17.83	N0° 00' 00"E	49589.96	101031.40
L89	5.00	N90° 00' 00"W	49591.29	101030.06
L90	15.00	N90° 00' 00"E	49589.96	101016.40
L91	14.17	S0° 00' 00"E	49590.46	101016.40
L92	240.37	N90° 00' 00"E	49562.29	101030.40
L93	6.10	S89° 07' 34"E	49592.01	101294.66
L94	5.50	S0° 52' 26"W	49592.01	101294.66
L95	6.50	N0° 52' 26"E	49565.75	101284.76
L96	96.16	N0° 51' 15"E	49495.74	101301.22
L97	84.07	N0° 53' 36"E	49507.86	101299.45
L98	147.01	N90° 00' 00"W	49538.29	101269.46
L99	6.50	N0° 00' 00"E	49531.79	101124.40
L100	11.00	N90° 00' 00"W	49531.79	101135.40
L101	31.38	N0° 52' 26"E	49534.37	101284.28

LINE TABLE				
LINE	LENGTH	DIRECTION	START N	START E
L102	39.03	N0° 52' 26"E	49530.51	101289.72
L103	12.00	S1° 00' 28"W	49507.77	101299.45
L104	6.00	S89° 05' 49"E	49505.86	101293.42
L105	6.02	S89° 05' 49"E	49507.86	101293.43
L106	11.01	S0° 58' 24"W	49506.88	101293.43
L107	57.72	S0° 58' 24"W	49495.87	101293.25
L108	59.77	S0° 47' 42"W	49438.16	101292.27
L109	19.25	S0° 48' 04"W	49378.39	101291.44
L110	70.09	S0° 53' 59"W	49359.14	101291.17
L111	21.00	S0° 50' 00"W	49289.06	101290.07
L112	18.24	S0° 49' 41"W	49268.06	101289.76
L113	5.99	S89° 01' 54"E	49495.87	101293.25
L114	57.48	N0° 58' 24"E	49438.31	101297.77
L115	20.00	S0° 52' 26"W	49418.18	101306.01
L116	60.00	S0° 47' 42"W	49438.30	101298.27
L117	45.30	S0° 47' 42"W	49430.92	101300.17
L118	6.00	S89° 12' 28"E	49378.39	101291.44
L119	19.25	S0° 47' 45"W	49378.31	101297.44
L120	6.00	S89° 12' 28"E	49370.14	101291.32
L121	6.00	S89° 12' 28"E	49369.14	101291.31
L122	6.00	S89° 12' 28"E	49359.14	101291.17
L123	60.00	S0° 51' 33"W	49437.62	101342.92
L124	60.00	S0° 51' 55"W	49437.69	101338.44
L125	45.40	S0° 51' 55"W	49430.42	101336.33
L126	20.00	S0° 52' 26"W	49417.81	101330.01
L127	70.09	S0° 53' 59"W	49359.06	101296.67
L128	21.00	S0° 50' 00"W	49288.97	101296.07
L129	5.50	S89° 08' 10"E	49289.06	101290.07
L130	6.00	S89° 08' 18"E	49279.06	101289.92
L131	6.00	S89° 10' 00"E	49278.06	101289.91
L132	5.50	S89° 10' 00"E	49268.06	101289.76
L133	18.00	S0° 49' 41"W	49267.98	101295.26
L134	186.67	N0° 00' 00"E	49375.62	101070.45
L135	103.13	N90° 00' 00"W	49246.29	101289.17
L136	3.00	N0° 00' 00"E	49246.29	101186.04
L137	4.33	S0° 00' 00"E	49253.62	101186.04
L138	12.33	N90° 00' 00"E	49253.62	101173.71
L139	7.33	N90° 00' 00"E	49253.62	101166.38
L140	6.67	N0° 00' 00"E	49253.62	101166.38
L141	3.33	N90° 00' 00"E	49260.29	101166.38
L142	0.67	N0° 00' 00"E	49259.62	101169.71
L143	2.67	N90° 00' 00"E	49259.62	101167.04
L144	5.33	N0° 00' 00"E	49254.29	101167.04
L145	19.00	N90° 00' 00"W	49254.29	101186.04
L146	6.00	N0° 00' 00"E	49254.29	101186.04
L147	0.67	N90° 00' 00"E	49260.29	101186.04
L148	10.33	S0° 00' 00"E	49260.29	101186.71
L149	80.00	N90° 00' 00"W	49249.96	101266.71
L150	10.33	N0° 00' 00"E	49249.96	101266.71
L151	0.67	N90° 00' 00"E	49260.29	101266.71
L152	10.33	N0° 00' 00"E	49249.96	101267.38
L153	16.67	N90° 00' 00"W	49249.96	101284.04
L154	10.33	N0° 00' 00"E	49249.96	101284.04
L155	33.42	S0° 00' 18"E	49400.54	101276.04
L156	8.00	N90° 00' 00"E	49367.12	101276.04
L157	106.83	S0° 00' 08"E	49367.12	101284.04
L158	67.01	S1° 07' 55"W	49507.45	101288.03
L159	10.00	N89° 58' 51"W	49440.45	101286.71
L160	24.67	S0° 00' 28"E	49440.46	101276.71
L161	12.51	S0° 00' 00"E	49471.50	101276.71
L162	4.14	S0° 00' 00"E	49444.60	101276.71
L163	22.09	N89° 57' 04"W	49480.00	101268.21
L165	40.62	N0° 00' 00"E	49490.00	101236.73
L166	33.00	N90° 00' 00"E	49530.62	101236.73
L167	5.33	S0° 00' 00"E	49530.62	101269.73
L168	14.53	N0° 00' 30"E	49516.76	101143.06
L169	23.18	N90° 00' 00"E	49531.29	101143.06
L170	104.15	N90° 00' 00"E	49531.29	101166.25
L172	13.86	N0° 01' 03"E	49516.76	101143.73
L173	92.99	N90° 00' 00"E	49530.62	101143.74
L174	0.75	N90° 00' 00"E	49526.77	101106.36
L175	12.73	S0° 00' 00"E	49526.77	101107.11
L176	12.94	N90° 00' 00"E	49514.04	101107.11
L178	1.50	S0° 00' 00"E	49511.79	101134.20
L183	16.10	N0° 00' 00"E	49494.29	101099.45
L184	41.33	N90° 00' 00"W	49510.29	101143.78
L185	3.47	N0° 03' 25"E	49510.29	101143.06
L186	3.00	N90° 00' 00"W	49494.29	101102.45
L187	45.33	S0° 00' 00"E	49510.29	101102.45
L188	41.33	N90° 00' 00"E	49464.96	101102.45
L189	45.33	N0° 00' 00"E	49464.96	101143.78
L190	2.50	N90° 00' 00"E	49417.96	101140.61
L191	26.00	N0° 00' 00"E	49417.96	101143.11
L192	29.33	N90° 00' 00"W	49443.96	101143.11
L193	0.67	N0° 00' 00"E	49443.96	101113.78
L194	30.00	N90° 00' 00"E	49444.62	101113.78
L195	27.33	S0° 00' 00"E	49444.62	101143.78
L196	9.17	N90° 00' 00"W	49417.29	101143.78
L197	0.67	N0° 00' 00"E	49417.29	101134.61
L198	6.00	N90° 00' 00"E	49417.96	101134.61
L199	2.50	S0° 00' 00"E	49443.96	101114.61
L200	23.00	N90° 00' 00"E	49441.46	101114.61
L201	3.00	S0° 00' 00"E	49441.46	101137.61
L202	3.00	N90° 00' 00"E	49438.46	101137.61
L203	20.50	S0° 00' 00"E	49438.46	101140.61
L204	22.00	S0° 00' 00"E	49443.96	101105.61
L205	22.67	N0° 00' 00"E	49421.96	101102.45
L206	5.33	N90° 00' 00"E	49444.62	101102.45

LINE TABLE				
LINE	LENGTH	DIRECTION	START N	START E
L207	41.33	N90° 00' 00"E	49251.29	101102.45
L208	18.00	N0° 00' 00"E	49251.29	101143.78
L209	23.33	N90° 00' 00"E	49269.29	101143.78
L210	29.33	N0° 00' 00"E	49269.29	101167.11
L211	4.50	N90° 00' 00"W	49298.62	101167.11
L212	26.00	N0° 00' 00"E	49298.62	101162.61
L213	22.83	N90° 00' 00"W	49324.62	101162.61
L214	20.00	N0° 00' 00"E	49324.62	101139.78
L215	6.67	N90° 00' 00"W	49344.62	101139.78
L216	12.00	N0° 00' 00"E	49344.62	101133.11
L217	6.67	N90° 00' 00"E	49356.62	101133.11
L218	17.06	N0° 09' 51"W	49356.62	101139.78
L219	24.94	N0° 06' 44"E	49373.68	101139.73
L220	5.33	N90° 00' 00"W	49398.62	101139.78
L221	19.33	N0° 00' 00"E	49398.62	101134.45
L222	24.00	N90° 00' 00"W	49417.96	101134.45
L223	4.00	N0° 00' 00"E	49417.96	101110.45
L224	8.00	N90° 00' 00"W	49421.96	101110.45
L225	170.67	S0° 00' 00"E	49421.96	101102.45
L226	59.35	S0° 00' 00"E	49630.14	101228.90
L227	41.87	N90° 00' 00"E	49570.79	101228.90
L229	5.21	N22° 34' 08"E	49587.22	101291.66
L230	26.72	N90° 00' 00"W	49608.21	101160.92
L231	27.44	N90° 00' 00"W	49608.21	101219.98
L232	10.58	N0° 00' 00"E	49597.63	101219.98
L233	13.66	S0° 00' 00"E	49597.63	101220.90
L234	10.58	N0° 00' 00"E	49573.39	101219.98
L235	62.58	N90° 00' 00"E	49573.39	101157.40
L236	4.00	N0° 00' 00"E	49588.80	101205.73
L237	6.00	N0° 00' 00"E	49582.80	101205.73
L238	48.00	N90° 00' 00"E	49582.80	101157.73
L239	6.00	S0° 00' 00"E	49588.80	101157.73
L240	4.00	N0° 00' 00"E	49588.80	101157.73
L241	6.00	N0° 00' 00"E	49592.80	101157.73
L242	48.00	N90° 00' 00"E	49598.80	101157.73
L243	6.00	S0° 00' 00"E	49598.80	101205.73
L245	6.00	N90° 00' 00"E	49572.89	101130.90
L246	6.00	N90° 00' 00"E	49572.89	101124.40
L247	4.17	S0° 00' 00"E	49577.05	101124.40
L248	13.88	N90° 00' 00"W	49581.39	101120.06
L249	19.59	S0° 00' 00"E	49592.27	101106.19
L250	19.70	S0° 00' 00"E	49592.39	101064.19
L251	18.50	N90° 00' 00"W	49581.39	101064.19
L252	11.00	S0° 00' 00"E	49592.39	101045.69
L253	9.19	N90° 00' 00"W	49587.39	101045.69
L254	5.00	S0° 00' 00"E	49592.39	101040.97
L255	4.71	N90° 00' 00"W	49592.39	101045.69

CURVE TABLE					
CURVE	DELTA	RADIUS	LENGTH	START N	START E
C1	91°32'39"	22.00	35.15	49173.84	101294.30
C2	89°14'08"	30.00	46.72	49220.29	101265.60
C3	30°34'56"	23.99	12.81	49230.90	101279.65
C4	90°11'22"	3.00	4.72	49223.29	101262.59
C5	90°00'00"	3.00	4.71	49196.29	101265.45
C6	86°18'44"	3.01	4.53	49193.29	101199.45
C7	90°00'00"	3.00	4.71	49196.29	101188.45
C8	86°52'24"	52.00	78.84	49248.21	101070.45
C9	86°52'24"	3.00	4.55	49196.29	101119.61
C10	3°12'12"	52.00	2.91	49196.29	101119.60
C12	97°14'54"	3.00	5.09	49220.43	101118.91
C13	82°45'06"	28.00	40.44	49248.21	101094.45
C14	84°06'16"	57.98	85.10	49248.21	101064.45
C15	90°00'00"	3.00	4.71	49394.96	101006.45
C16	90°00'00"	3.00	4.71	49532.79	101003.45
C17	48°54'09"	3.00	2.56	49545.39	101006.45
C18	49°02'52"	38.00	32.53	49576.39	100992.40
C19	90°00'00"	14.00	21.99	49576.29	101016.40
C20	89°06'31"	30.00	46.66	49562.29	101270.77
C21	41°14'52"	24.50	17.64	49572.25	101284.85
C22	90°00'00"	28.00	43.98	49538.29	101122.45
C23	90°59'47"	30.00	47.65	49507.77	101299.45
C24	88°41'00"	24.00	37.15	49531.27	101270.40
C25	45°37'52"	23.00	18.32	49526.73	101106.36
C32	43°49'00"	14.44	11.05	49438.30	101298.27
C33	43°49'00"	14.44	11.05	49428.24	101302.14
C35	43°25'19"	14.55	11.03	49398.18	101305.70
C36	43°25'19"	14.55	11.03	49388.24	101301.57
C37	44°15'16"	14.33	11.07	49437.69	101338.44
C38	44°15'16"	14.33	11.07	49427.75	101334.22
C40	44°17'55"	14.32	11.07	49397.82	101329.70
C41	44°17'55"	14.32	11.07	49387.76	101333.62
C42	9°00'16"	23.99	3.77	49246.29	101289.17
C43	92°54'56"	17.16	27.83	49525.29	101270.69
C47	90°00'00"	8.50	13.35	49480.00	101268.21
C49	128°06'40"	8.00	17.89	49458.98	101276.71
C51	86°29'03"	10.00	15.09	49480.02	101246.12
C52	121°24'35"	7.25	15.36	49514.04	101120.05
C54	76°21'14"	21.50	28.65	49570.79	101270.77
C55	180°00'00"	7.50	23.56	49608.21	101136.90
C56	129°14'46"	17.50	39.48	49608.21	101192.54
C57	180°00'00"	7.50	23.56	49573.39	101151.90
C58	90°00'00"	4.33	6.81	49577.05	101124.40
C59	48°53'12"	50.75	43.30	49572.68	101064.19
C60	40°30'37"	7.25	5.13	49516.50	101132.46

AGENCY

FLEWELLING & MOODY
architecture planning interiors

HEADQUARTERS OFFICE:
99 S. Lake Ave., Suite 300
Pasadena, CA 91101
323.543.8300
E-Mail: fm-pasadena@flewelling-moody.com

ANTELOPE VALLEY OFFICE:
1035 West Lancaster Boulevard
Lancaster, California 93534
661.949.0771
E-Mail: fm-lancaster@flewelling-moody.com

An Employee Owned Corporation

ARCHITECT

CONSULTANT

REGISTERED PROFESSIONAL ENGINEER
JOSIAH D. JENISON
NO 77454
CIVIL
STATE OF CALIFORNIA

ECG
Encompass Consultant Group
25115 AVE STANFORD, SUITE A320, SANTA CLARITA, CA 91355
PHONE: 661.600.9367 WEBSITE: WWW.ECGCIVIL.COM

Drawn by

Checked by

Revisions

No.	Date	Description

All dimensions must be checked at the job by the contractor who accepts full responsibility for their accuracy under the contract. These plans & the specifications in connection therewith have been prepared for a specific site. Any and all responsibility for their use in whole or in part on any other site is hereby disclaimed by Flewelling & Moody.

CITY OF RIDGECREST

SGT. JOHN PINNEY MEMORIAL POOL REPLACEMENT

205 S WARNER ST.
RIDGECREST, CA 93555

HORIZONTAL CONTROL PLAN

Job No.
3055-0100

Date
05/02/2025

C5.01

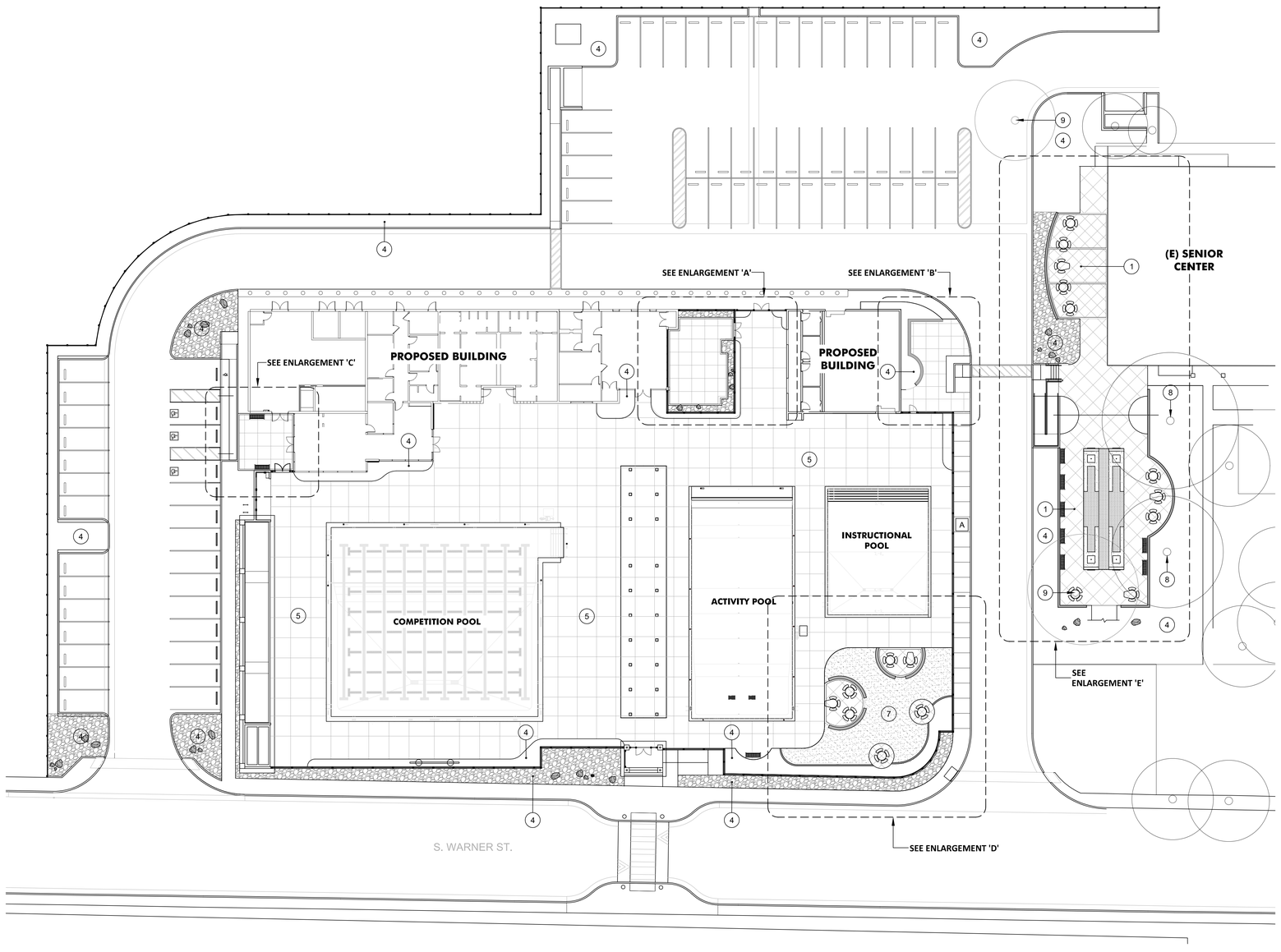

CONSTRUCTION PLAN KEYNOTES (1)

#	DESCRIPTION	REFERENCE
1.	COLORED CONCRETE PAVING. SEE HARDSCAPE FINISH LEGEND, BELOW.	DETAIL 1A & 1B, SHEET L1.03
2.	8" WIDE COLORED CONCRETE BAND	DETAIL 1A & 1B, SHEET L1.03
3.	18" TALL CONCRETE SEATWALL	DETAIL 2, SHEET L1.03
4.	LANDSCAPE PLANTER, SEE PLANTING AND IRRIGATION PLANS	
5.	CONCRETE POOL DECK (PER AQUATIC PLANS).	
6.	6" CONCRETE TURF HEADER	DETAIL 3, SHEET L1.03
7.	SOD TURF, REFER TO PLANTING PLAN L2.01	
8.	EXISTING TREE TO REMAIN	
9.	EXISTING TREE TO BE REMOVED	

CONSTRUCTION NOTES

- DIMENSIONS ARE FROM EDGES OF PAVING, FACE OF CURB, FACE OF WALL, CURB RETURN, OR CORNERS OF BUILT ELEMENTS, U.O.N.
- FORM WORK TO BE REVIEWED AND APPROVED PRIOR TO PLACING CONCRETE. PROVIDE 48-HOURS NOTICE TO LANDSCAPE ARCHITECT FOR REVIEW OF FORMS.
- LAYOUT FORM WORK TO CONFORM TO DIMENSIONS AND GRADES INDICATED. CONFIRM THAT DIMENSIONS AND GRADES CONFORM TO MINIMUMS PROVIDED ON THE PLANS AS WELL AS WITHIN MINIMUM OR MAXIMUM REQUIREMENTS FROM ADA OR OTHER APPLICABLE CODES.
- CURVES SHALL BE SMOOTH AND FLOWING WITHOUT ABRUPT ANGLES OR FLAT EDGES.
- SLOPES ON PAVING SHALL NOT EXCEED 5% LONGITUDINAL SLOPE OR 2% CROSS SLOPE, U.O.N.
- CONSTRUCTION AND FINISHES OF THE WORK OF THESE PLANS SHALL CONFORM TO REQUIREMENTS OF ADA OR OTHER APPLICABLE CODES.
- INSTALL IRRIGATION SLEEVES UNDERNEATH AREAS TO RECEIVE PAVING PRIOR TO SETTING THE FORM WORK FOR THE PAVING.

SCALE: 1" = 20'-0"

0' 20' 40' 60'

LANDSCAPE ARCHITECTS SEAL

AGENCY

REVIEWED FOR CODE COMPLIANCE BY:
WILLDAN ENGINEERING
Approval of these plans & specifications shall not be construed to be a permit for, or an approval of any violation of any Federal, State, County or City laws or ordinances. One set of approved plans must be kept on the job until completion.
9:25:56 AM Jul 21, 2025

PTN._____ APPL._____

FLEWELLING & MOODY
architecture planning interiors

HEADQUARTERS OFFICE:
815 Colorado Blvd, Suite 200
Los Angeles, CA 90041
P 323.543.8300
E-Mail: fm-pasadena@flewelling-moody.com

ANTELOPE VALLEY OFFICE:
1035 West Lancaster Boulevard
Lancaster, California 93534
P 661.949.0771
E-Mail: fm-lancaster@flewelling-moody.com

An Employee Owned Corporation

ARCHITECT

CONSULTANT

OASIS ASSOCIATES
LANDSCAPE ARCHITECTURE • PLANNING
3427 MIGUELITO COURT
SAN LUIS OBISPO
CALIFORNIA 93401
P 805.541.4509
F 805.546-0525
RLA 2248 CLARB #907

Drawn by SDW

Checked by MLC

Revisions

No.	Date	Description

All dimensions must be checked at the job by the contractor who accepts full responsibility for their accuracy under the contract. These plans & the specifications in connection therewith have been prepared for a specific site. Any and all responsibility for their use in whole or in part on any other site is hereby disclaimed by Flewelling & Moody.

CITY OF RIDGECREST

SGT. JOHN PINNEY MEMORIAL POOL REPLACEMENT

205 S. WARNER STREET
RIDGECREST, CA 93555

Drawing Title

LANDSCAPE CONSTRUCTION PLAN

Job No. 3055-0100

Sheet No. L1.01

Date 3-31-2025

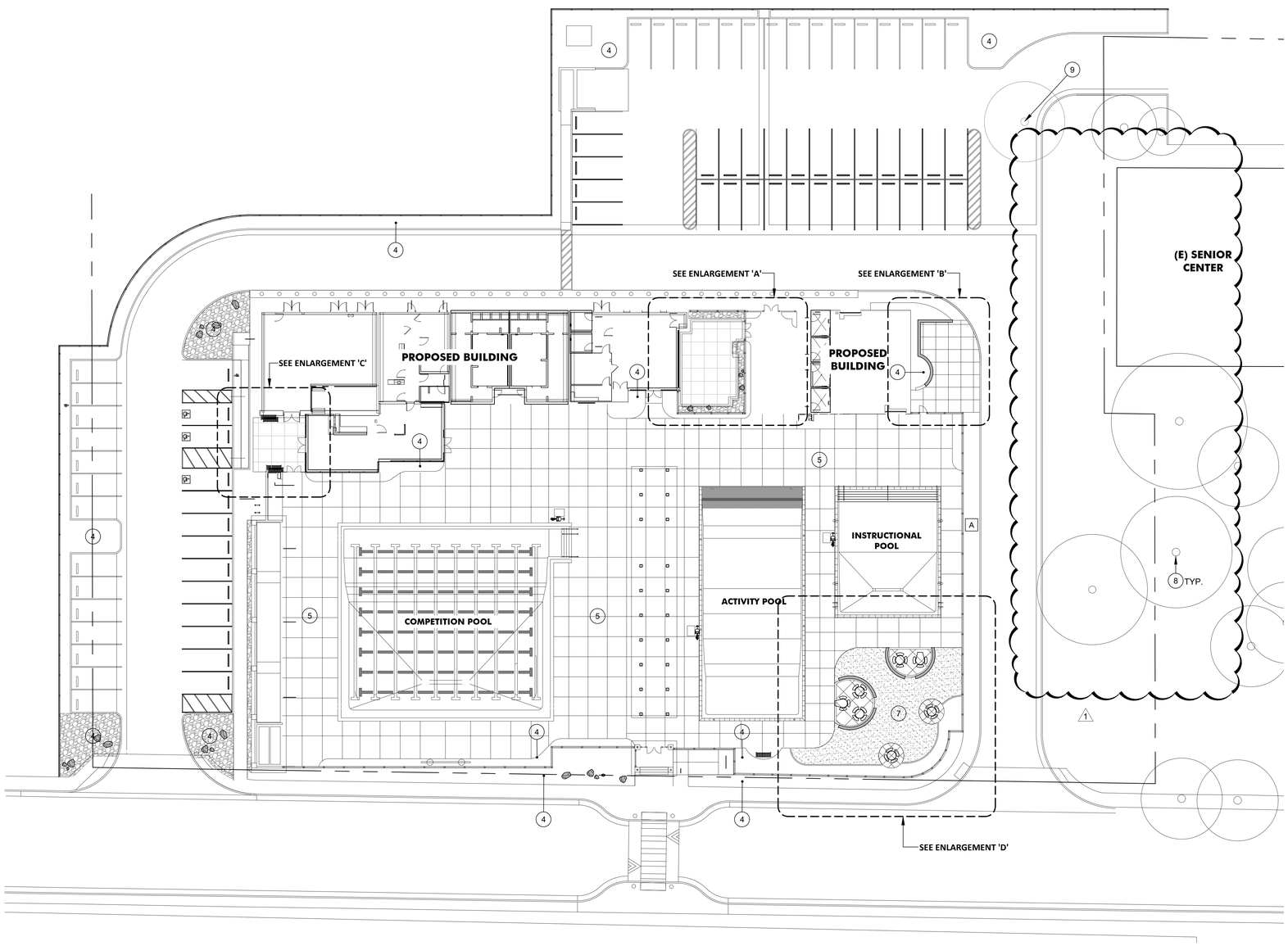

CONSTRUCTION PLAN KEYNOTES (1)

#	DESCRIPTION	REFERENCE
1.	COLORED CONCRETE PAVING. SEE HARDSCAPE FINISH LEGEND, BELOW.	DETAIL 1A & 1B, SHEET L1.03A2 / 1
2.	8" WIDE COLORED CONCRETE BAND	DETAIL 1A & 1B, SHEET L1.03A2 / 1
3.	18" TALL CONCRETE SEATWALL	DETAIL 2, SHEET L1.03A2 / 1
4.	LANDSCAPE PLANTER, SEE PLANTING AND IRRIGATION PLANS	
5.	CONCRETE POOL DECK (PER AQUATIC PLANS).	
6.	6" CONCRETE TURF HEADER	DETAIL 3, SHEET L1.03A2 / 1
7.	SOD TURF, REFER TO PLANTING PLAN	L2.01A2 / 1
8.	EXISTING TREE TO REMAIN, typ.	
9.	EXISTING TREE TO BE REMOVED	

CONSTRUCTION NOTES

- DIMENSIONS ARE FROM EDGES OF PAVING, FACE OF CURB, FACE OF WALL, CURB RETURN, OR CORNERS OF BUILT ELEMENTS, U.O.N.
- FORM WORK TO BE REVIEWED AND APPROVED PRIOR TO PLACING CONCRETE. PROVIDE 48-HOURS NOTICE TO LANDSCAPE ARCHITECT FOR REVIEW OF FORMS.
- LAYOUT FORM WORK TO CONFORM TO DIMENSIONS AND GRADES INDICATED. CONFIRM THAT DIMENSIONS AND GRADES CONFORM TO MINIMUMS PROVIDED ON THE PLANS AS WELL AS WITHIN MINIMUM OR MAXIMUM REQUIREMENTS FROM ADA OR OTHER APPLICABLE CODES.
- CURVES SHALL BE SMOOTH AND FLOWING WITHOUT ABRUPT ANGLES OR FLAT EDGES.
- SLOPES ON PAVING SHALL NOT EXCEED 5% LONGITUDINAL SLOPE OR 2% CROSS SLOPE, U.O.N.
- CONSTRUCTION AND FINISHES OF THE WORK OF THESE PLANS SHALL CONFORM TO REQUIREMENTS OF ADA OR OTHER APPLICABLE CODES.
- INSTALL IRRIGATION SLEEVES UNDERNEATH AREAS TO RECEIVE PAVING PRIOR TO SETTING THE FORM WORK FOR THE PAVING.

SCALE: 1" = 20'-0"

0' 20' 40' 60'

REGISTERED LANDSCAPE ARCHITECT — 5976 — 11/30/25 — RENEWAL — ATASCADERO, CALIFORNIA

LANDSCAPE ARCHITECTS SEAL

AGENCY

PTN._____ - _____ APPL._____ - _____

FLEWELLING & MOODY
architecture planning interiors

HEADQUARTERS OFFICE:
815 Colorado Blvd, Suite 200
Los Angeles, CA 90041
P 323.543.8300
E-Mail: fm-pasadena@flewelling-moody.com

ANTELOPE VALLEY OFFICE:
1035 West Lancaster Boulevard
Lancaster, California 93534
P 661.949.0771
E-Mail: fm-lancaster@flewelling-moody.com

An Employee Owned Corporation

ARCHITECT

CONSULTANT

OASIS ASSOCIATES
LANDSCAPE ARCHITECTURE + PLANNING
3427 MIGUELITO COURT
SAN LUIS OBISPO
CALIFORNIA 93401
P 805.541.4509
F 805.546-0525
R.L.A 2248 C.L.A.R.B #907

Drawn by: SDW

Checked by: MLC

Revisions

No.	Date	Description
1	01/15/25	BID ALTERNATE

All dimensions must be checked at the job by the contractor who accepts full responsibility for their accuracy under the contract. These plans & the specifications in connection therewith have been prepared for a specific site. Any and all responsibility for their use in whole or in part on any other site is hereby disclaimed by Flewelling & Moody.

CITY OF RIDGECREST

SGT. JOHN PINNEY MEMORIAL POOL REPLACEMENT

205 S. WARNER STREET
RIDGECREST, CA 93555

Drawing Title

LANDSCAPE CONSTRUCTION PLAN - ALT 2

Job No. 3055.0000

Sheet No. L1.01A2

Date 6-5-2025

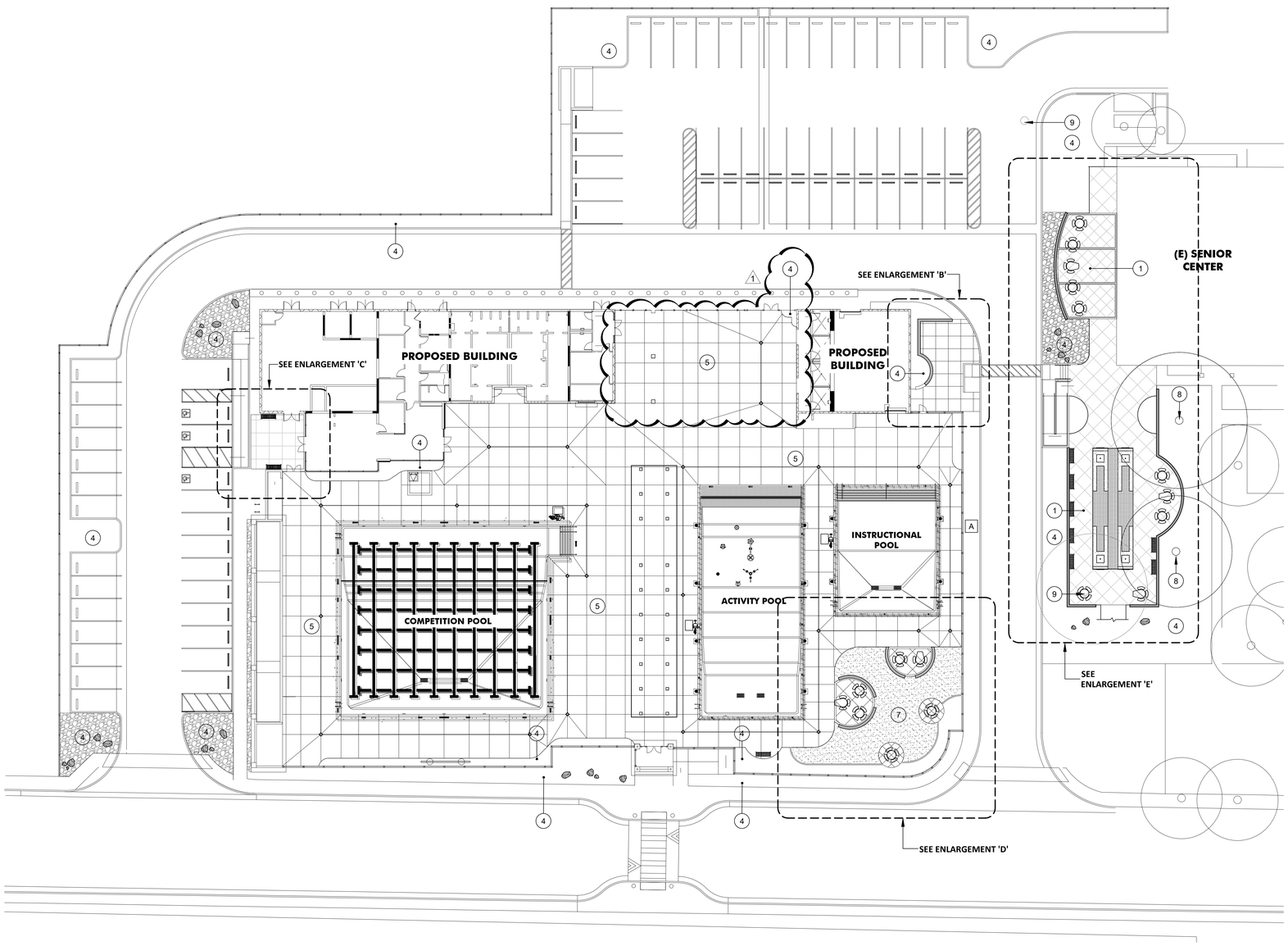

CONSTRUCTION PLAN KEYNOTES (1)

#	DESCRIPTION	REFERENCE
1.	COLORED CONCRETE PAVING. SEE HARDSCAPE FINISH LEGEND, BELOW.	DETAIL 1A & 1B, SHEET L1.03A6 (1)
2.	8" WIDE COLORED CONCRETE BAND	DETAIL 1A & 1B, SHEET L1.03A6 (1)
3.	18" TALL CONCRETE SEATWALL	DETAIL 2, SHEET L1.03A6 (1)
4.	LANDSCAPE PLANTER, SEE PLANTING AND IRRIGATION PLANS	
5.	CONCRETE POOL DECK (PER AQUATIC PLANS).	
6.	6" CONCRETE TURF HEADER	DETAIL 3, SHEET L1.03A6 (1)
7.	SOD TURF, REFER TO PLANTING PLAN L2.01A6 (1)	
8.	EXISTING TREE TO REMAIN	
9.	EXISTING TREE TO BE REMOVED	

CONSTRUCTION NOTES

- DIMENSIONS ARE FROM EDGES OF PAVING, FACE OF CURB, FACE OF WALL, CURB RETURN, OR CORNERS OF BUILT ELEMENTS, U.O.N.
- FORM WORK TO BE REVIEWED AND APPROVED PRIOR TO PLACING CONCRETE. PROVIDE 48-HOURS NOTICE TO LANDSCAPE ARCHITECT FOR REVIEW OF FORMS.
- LAYOUT FORM WORK TO CONFORM TO DIMENSIONS AND GRADES INDICATED. CONFIRM THAT DIMENSIONS AND GRADES CONFORM TO MINIMUMS PROVIDED ON THE PLANS AS WELL AS WITHIN MINIMUM OR MAXIMUM REQUIREMENTS FROM ADA OR OTHER APPLICABLE CODES.
- CURVES SHALL BE SMOOTH AND FLOWING WITHOUT ABRUPT ANGLES OR FLAT EDGES.
- SLOPES ON PAVING SHALL NOT EXCEED 5% LONGITUDINAL SLOPE OR 2% CROSS SLOPE, U.O.N.
- CONSTRUCTION AND FINISHES OF THE WORK OF THESE PLANS SHALL CONFORM TO REQUIREMENTS OF ADA OR OTHER APPLICABLE CODES.
- INSTALL IRRIGATION SLEEVES UNDERNEATH AREAS TO RECEIVE PAVING PRIOR TO SETTING THE FORM WORK FOR THE PAVING.

SCALE: 1" = 20'-0"

0' 20' 40' 60'

REGISTERED LANDSCAPE ARCHITECT
STEPHEN L. CLARK
11/30/25
6/5/25
STATE OF CALIFORNIA

LANDSCAPE ARCHITECTS SEAL

AGENCY

PTN. - APPL. -

FLEWELLING & MOODY
architecture planning interiors

HEADQUARTERS OFFICE:
815 Colorado Blvd, Suite 200
Los Angeles, CA 90041
P 323.543.8300
E-Mail: fm-pasadena@flewelling-moody.com

ANTELOPE VALLEY OFFICE:
1035 West Lancaster Boulevard
Lancaster, California 93534
P 661.949.0771
E-Mail: fm-lancaster@flewelling-moody.com

An Employee Owned Corporation

ARCHITECT

CONSULTANT

OASIS ASSOCIATES
LANDSCAPE ARCHITECTURE + PLANNING
3427 MIGUELITO COURT
SAN LUIS OBISPO
CALIFORNIA 93401
P 805.541.4509
F 805.546-0525
RLA 2248 CLARB #907

Drawn by SDW

Checked by MLC

Revisions

No.	Date	Description
1	08/27/2025	BID ALTERNATE

All dimensions must be checked at the job by the contractor who accepts full responsibility for their accuracy under the contract. These plans & the specifications in connection therewith have been prepared for a specific site. Any and all responsibility for their use in whole or in part on any other site is hereby disclaimed by Flewelling & Moody.

CITY OF RIDGECREST

SGT. JOHN PINNEY MEMORIAL POOL REPLACEMENT

205 S. WARNER STREET
RIDGECREST, CA 93555

Drawing Title

LANDSCAPE CONSTRUCTION PLAN - ALT 6

Job No. 3055.0000

Date 6-5-2025

Sheet No. L1.01A6

O:\Pinney Memorial Pool Replacement_23-0069\Drawings\L11 Constr Plan R2.dwg; Last Saved By: DesignAssist - Jul 21, 2025 - 11:20am Last Printed By: DESIGNASSIST - Jul 21, 2025, 1:31pm;

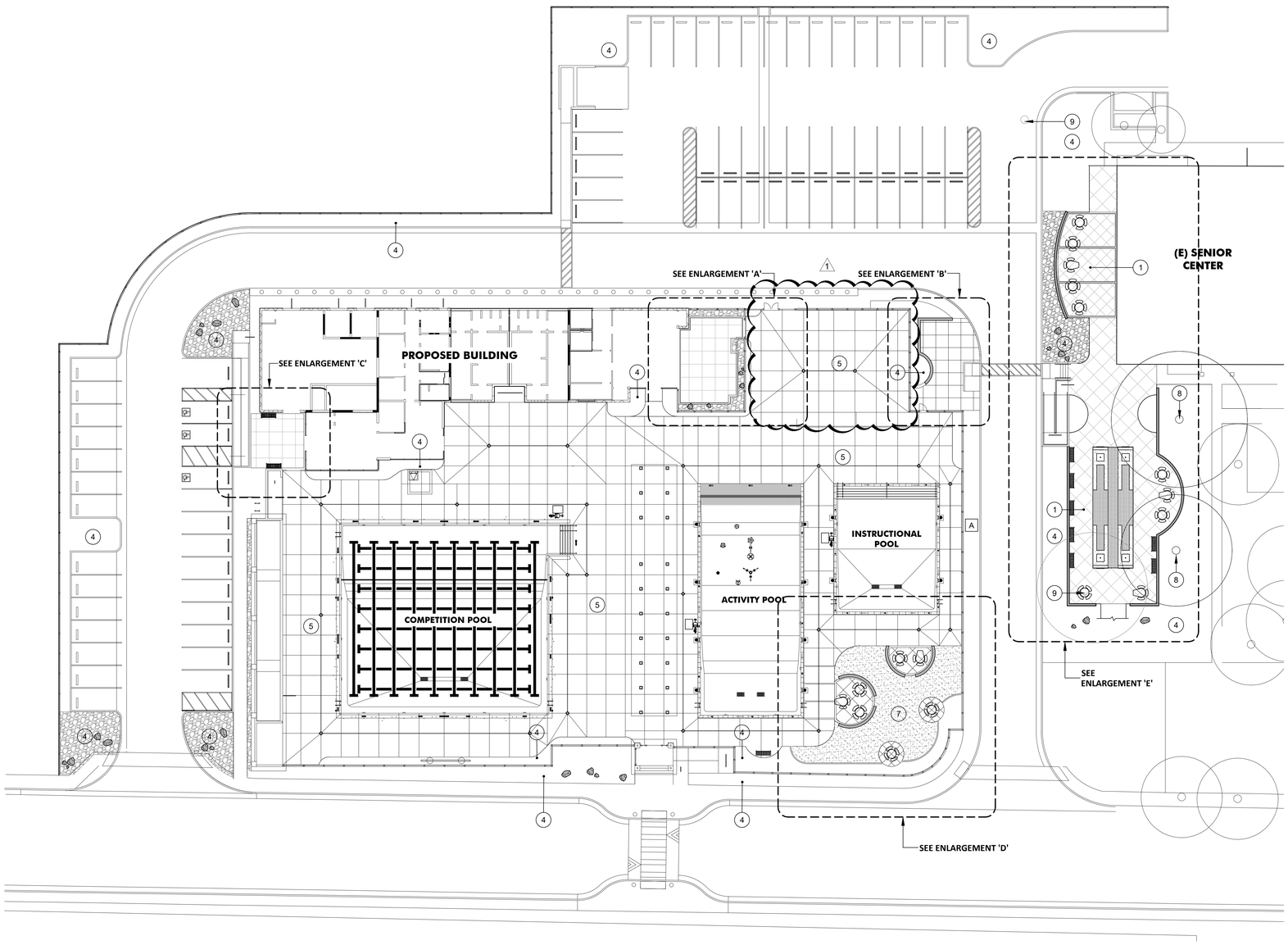

CONSTRUCTION PLAN KEYNOTES (1)

#	DESCRIPTION	REFERENCE
1.	COLORED CONCRETE PAVING. SEE HARDSCAPE FINISH LEGEND, BELOW.	DETAIL 1A & 1B, SHEET L1.03
2.	8" WIDE COLORED CONCRETE BAND	DETAIL 1A & 1B, SHEET L1.03
3.	18" TALL CONCRETE SEATWALL	DETAIL 2, SHEET L1.03
4.	LANDSCAPE PLANTER, SEE PLANTING AND IRRIGATION PLANS	
5.	CONCRETE POOL DECK (PER AQUATIC PLANS).	
6.	6" CONCRETE TURF HEADER	DETAIL 3, SHEET L1.03
7.	SOD TURF, REFER TO PLANTING PLAN L2.01A7 1	
8.	EXISTING TREE TO REMAIN	
9.	EXISTING TREE TO BE REMOVED	

CONSTRUCTION NOTES

- DIMENSIONS ARE FROM EDGES OF PAVING, FACE OF CURB, FACE OF WALL, CURB RETURN, OR CORNERS OF BUILT ELEMENTS, U.O.N.
- FORM WORK TO BE REVIEWED AND APPROVED PRIOR TO PLACING CONCRETE. PROVIDE 48-HOURS NOTICE TO LANDSCAPE ARCHITECT FOR REVIEW OF FORMS.
- LAYOUT FORM WORK TO CONFORM TO DIMENSIONS AND GRADES INDICATED. CONFIRM THAT DIMENSIONS AND GRADES CONFORM TO MINIMUMS PROVIDED ON THE PLANS AS WELL AS WITHIN MINIMUM OR MAXIMUM REQUIREMENTS FROM ADA OR OTHER APPLICABLE CODES.
- CURVES SHALL BE SMOOTH AND FLOWING WITHOUT ABRUPT ANGLES OR FLAT EDGES.
- SLOPES ON PAVING SHALL NOT EXCEED 5% LONGITUDINAL SLOPE OR 2% CROSS SLOPE, U.O.N.
- CONSTRUCTION AND FINISHES OF THE WORK OF THESE PLANS SHALL CONFORM TO REQUIREMENTS OF ADA OR OTHER APPLICABLE CODES.
- INSTALL IRRIGATION SLEEVES UNDERNEATH AREAS TO RECEIVE PAVING PRIOR TO SETTING THE FORM WORK FOR THE PAVING.

SCALE: 1" = 20'-0"

0' 20' 40' 60'

LANDSCAPE ARCHITECTS SEAL

AGENCY

PTN._____ - _____ APPL._____ - _____

FLEWELLING & MOODY
architecture planning interiors

HEADQUARTERS OFFICE:
815 Colorado Blvd, Suite 200
Los Angeles, CA 90041
P 323.543.8300
E-Mail: fm-pasadena@flewelling-moody.com

ANTELOPE VALLEY OFFICE:
1035 West Lancaster Boulevard
Lancaster, California 93534
P 661.949.0771
E-Mail: fm-lancaster@flewelling-moody.com

An Employee Owned Corporation

ARCHITECT

CONSULTANT

OASIS ASSOCIATES
LANDSCAPE ARCHITECTURE + PLANNING
3427 MIGUELITO COURT
SAN LUIS OBISPO
CALIFORNIA 93401
P 805.541.4509
F 805.546-0525
RLA 2248 CLARB #907

Drawn by SDW

Checked by MLC

Revisions

No.	Date	Description
1	08/27/2025	BID ALTERNATE

All dimensions must be checked at the job by the contractor who accepts full responsibility for their accuracy under the contract. These plans & the specifications in connection therewith have been prepared for a specific site. Any and all responsibility for their use in whole or in part on any other site is hereby disclaimed by Flewelling & Moody.

CITY OF RIDGECREST

SGT. JOHN PINNEY MEMORIAL POOL REPLACEMENT

205 S. WARNER STREET
RIDGECREST, CA 93555

Drawing Title

LANDSCAPE CONSTRUCTION PLAN - ALT 7

Job No. 3055.0000

Date 6-5-2025

Sheet No. L1.01A7

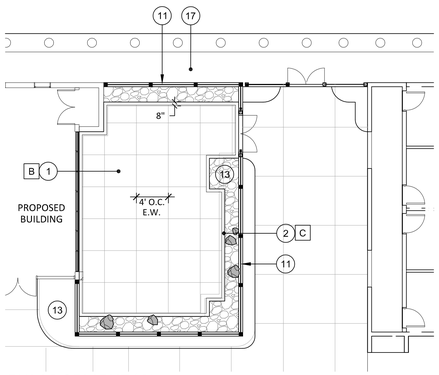

ENLARGEMENT 'A'
SCALE: 1"=10'

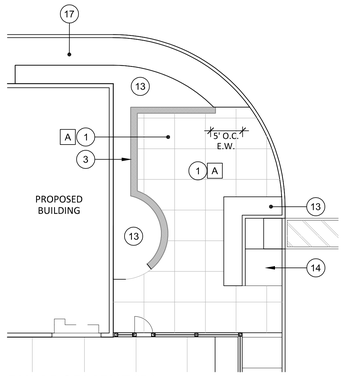

ENLARGEMENT 'B'
SCALE: 1"=10'

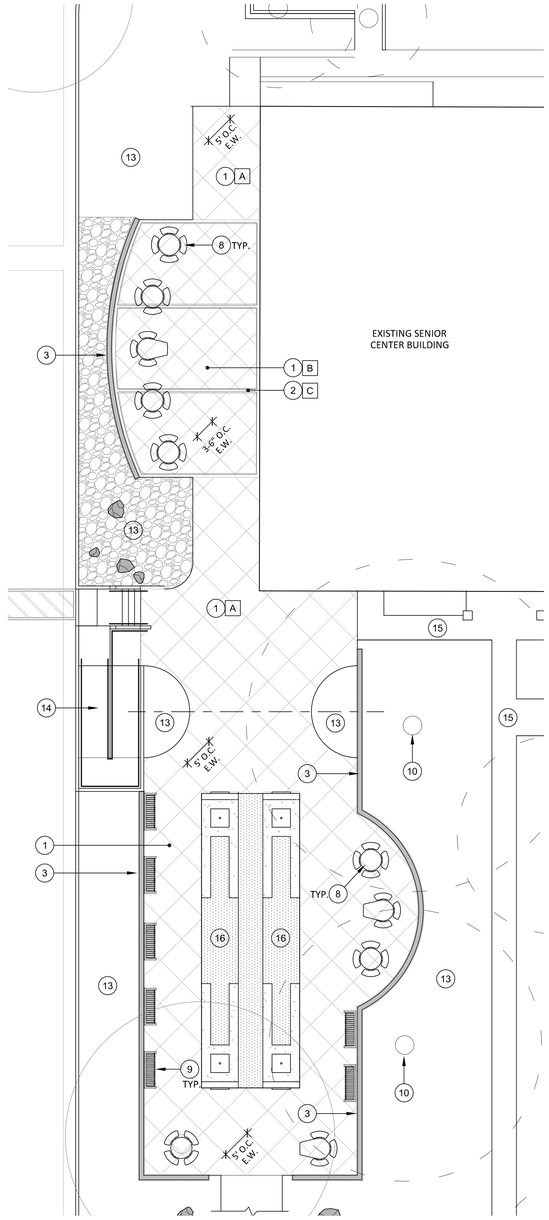

ENLARGEMENT 'E'
SCALE: 1"=10'

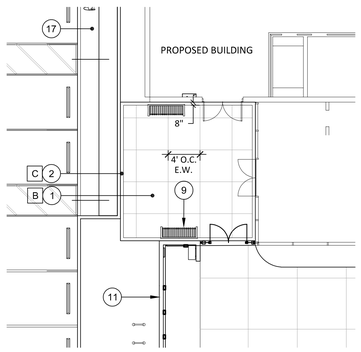

ENLAGEMENT 'C'
SCALE: 1"=10'

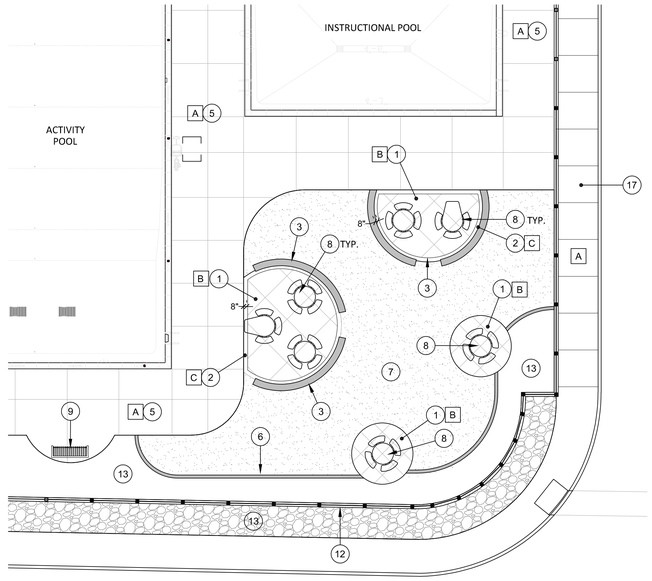

ENLARGEMENT 'D'
SCALE: 1"=10'

CONSTRUCTION PLAN KEYNOTES (1)

#	DESCRIPTION	REFERENCE
1.	CONCRETE PAVING. SEE HARDSCAPE FINISH LEGEND, BELOW.	DETAIL 1a & 1B, SHEET LL1.03
2.	8" WIDE COLORED CONCRETE BAND	DETAIL 1a & 1B, SHEET L1.03
3.	18" TALL BLOCK SEATWALL WITH STUCCO FINISH.	DETAIL 2, SHEET L1.03
4.	NOT USED.	
5.	CONCRETE POOL DECK, PER AQUATIC PLANS	
6.	6" CONCRETE TURF HEADER	DETAIL 3, SHEET L1.03
7.	SOD TURF	
8.	PICNIC TABLE SHALL BE "FOOD COURT ROUND" QR-42FC (QTY. 12) AND QR-42FC-ADA (QTY. 5), WHERE SHOWN. FINISH: CRAFTSMAN'S ETCH. COLOR AT POOL: MISSION WHITE. COLOR AT SENIOR CENTER: LATTE. INSTALL PER MANF'S INSTRUCTIONS. AVAILABLE FROM QCP 866-703-3434.	
9.	BENCH SHALL BE "Y2" Q4-Y272B (QTY. 10). FINISH: CRAFTSMAN'S ETCH. COLOR AT POOL: MISSION WHITE. COLOR AT SENIOR CENTER: LATTE. INSTALL PER MANF'S INSTRUCTIONS. AVAILABLE FROM QCP 866-703-3434.	
10.	EXISTING TREE TO REMAIN	
11.	FENCE/WALL PER ARCHITECT'S PLAN	
12.	FENCE PER ARCHITECT'S PLANS	
13.	AT-GRADE PLANTER. SEE PLANTING AND IRRIGATION SHEETS.	
14.	RAMP PER CIVIL'S PLANS	
15.	EXISTING HARDSCAPE TO REMAIN	
16.	HORSESHOE PIT (2)	DETAIL 5, SHEET L1.03
17.	SIDEWALK PER CIVIL PLANS.	

HARDSCAPE LEGEND (A)

#	DESCRIPTION	TYPE	COLOR	FINISH	MANUFACTURER
A	CONCRETE	-	PER AQUATIC PLANS	-	-
B	COLORED CONCRETE	INTEGRAL	PALOMINO 5447	SAND	DAVIS COLORS
C	COLORED CONCRETE	INTEGRAL	COCOA 6130	SAND	DAVIS COLORS

CONSTRUCTION NOTES

- DIMENSIONS ARE FROM EDGES OF PAVING, FACE OF CURB, FACE OF WALL, CURB RETURN, OR CORNERS OF BUILT ELEMENTS, U.O.N.
- FORM WORK TO BE REVIEWED AND APPROVED PRIOR TO PLACING CONCRETE. PROVIDE 48-HOURS NOTICE TO LANDSCAPE ARCHITECT FOR REVIEW OF FORMS.
- LAYOUT FORM WORK TO CONFORM TO DIMENSIONS AND GRADES INDICATED. CONFIRM THAT DIMENSIONS AND GRADES CONFORM TO MINIMUMS PROVIDED ON THE PLANS AS WELL AS WITHIN MINIMUM OR MAXIMUM REQUIREMENTS FROM ADA OR OTHER APPLICABLE CODES.
- CURVES SHALL BE SMOOTH AND FLOWING WITHOUT ABRUPT ANGLES OR FLAT EDGES.
- SLOPES ON PAVING SHALL NOT EXCEED 5% LONGITUDINAL SLOPE OR 2% CROSS SLOPE, U.O.N.
- CONSTRUCTION AND FINISHES OF THE WORK OF THESE PLANS SHALL CONFORM TO REQUIREMENTS OF ADA OR OTHER APPLICABLE CODES.
- INSTALL IRRIGATION SLEEVES UNDERNEATH AREAS TO RECEIVE PAVING PRIOR TO SETTING THE FORM WORK FOR THE PAVING.

SCALE: 1" = 20'-0"

0' 20' 40' 60'

LANDSCAPE ARCHITECTS SEAL

AGENCY

REVIEWED FOR CODE COMPLIANCE BY:
WILLDAN ENGINEERING

Approval of these plans & specifications shall not be construed to be a permit for, or an approval of any violation of any Federal, State, County or City laws or ordinances. One set of approved plans must be kept on the job until completion.

9:26:01 AM Jul 21, 2025

PTN._____ - _____ APPL._____ - _____

FLEWELLING & MOODY
architecture planning interiors

HEADQUARTERS OFFICE:
815 Colorado Blvd, Suite 200
Los Angeles, CA 90041
P 323.543.8300
E-Mail: fm-pasadena@flewelling-moody.com

ANTELOPE VALLEY OFFICE:
1035 West Lancaster Boulevard
Lancaster, California 93534
P 661.949.0771
E-Mail: fm-lancaster@flewelling-moody.com

An Employee Owned Corporation

ARCHITECT

CONSULTANT

OASIS ASSOCIATES
LANDSCAPE ARCHITECTURE + PLANNING
3427 MIGUELITO COURT
SAN LUIS OBISPO
CALIFORNIA 93401
P 805.541.4509
F 805.546-0525
RLA 2248 CLARB #907

Drawn by SDW

Checked by MLC

Revisions

No.	Date	Description

All dimensions must be checked at the job by the contractor who accepts full responsibility for their accuracy under the contract. These plans & the specifications in connection therewith have been prepared for a specific site, only and all responsibility for their use in whole or in part on any other site is hereby disclaimed by Flewelling & Moody.

CITY OF RIDGECREST

SGT. JOHN PINNEY MEMORIAL
POOL REPLACEMENT

205 S. WARNER STREET
RIDGECREST, CA 93555

Drawing Title

LANDSCAPE
CONSTRUCTION
PLAN
ENLARGEMENTS

Job No. 3055-0100

Sheet No. L1.02

Date 3-31-2025

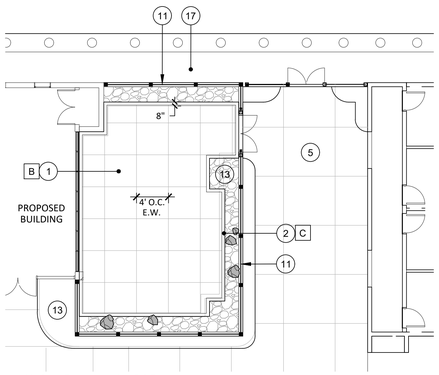

ENLARGEMENT 'A'
SCALE: 1"=10'

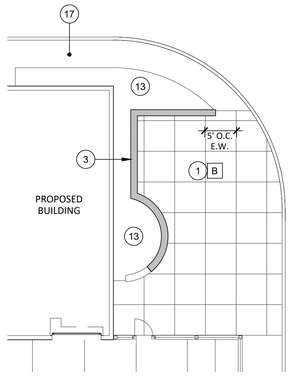

ENLARGEMENT 'B'
SCALE: 1"=10'

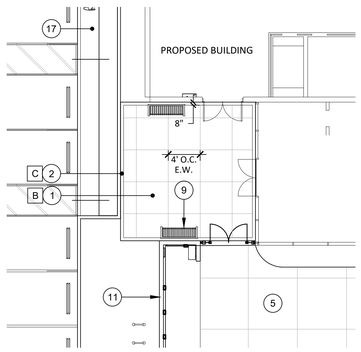

ENLAGEMENT 'C'
SCALE: 1"=10'

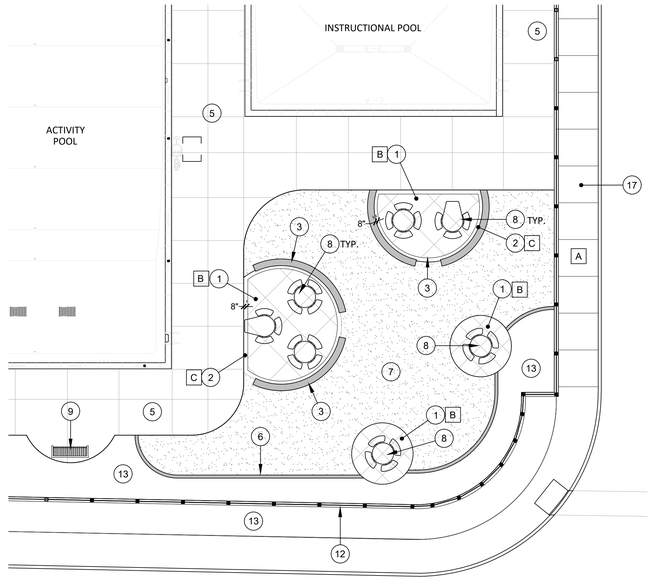

ENLARGEMENT 'D'
SCALE: 1"=10'

CONSTRUCTION PLAN KEYNOTES (1)

#	DESCRIPTION	REFERENCE
1.	CONCRETE PAVING. SEE HARDSCAPE FINISH LEGEND, BELOW.	DETAIL 1a & 1B, SHEET L1.03A2
2.	8" WIDE COLORED CONCRETE BAND	DETAIL 1a & 1B, SHEET L1.03A2
3.	18" TALL BLOCK SEATWALL WITH STUCCO FINISH.	DETAIL 2, SHEET L1.03A2
4.	NOT USED.	
5.	CONCRETE POOL DECK, PER AQUATIC PLANS	
6.	6" CONCRETE TURF HEADER	DETAIL 3, SHEET L1.03A2
7.	SOD TURF	
8.	PICNIC TABLE SHALL BE "FOOD COURT ROUND" QR-42FC (QTY. 5) AND QR-42FC-ADA (QTY. 2), WHERE SHOWN. FINISH: CRAFTSMAN'S ETCH. COLOR AT POOL: MISSION WHITE. COLOR AT SENIOR CENTER: LATTE. INSTALL PER MANF'S INSTRUCTIONS. AVAILABLE FROM QCP 866-703-3434.	
9.	BENCH SHALL BE "Y2" Q4-Y272B (QTY. 3). FINISH: CRAFTSMAN'S ETCH. COLOR AT POOL: MISSION WHITE. COLOR AT SENIOR CENTER: LATTE. INSTALL PER MANF'S INSTRUCTIONS. AVAILABLE FROM QCP 866-703-3434.	
10.	EXISTING TREE TO REMAIN	
11.	FENCE/WALL PER ARCHITECT'S PLAN	
12.	FENCE PER ARCHITECT'S PLANS	
13.	AT-GRADE PLANTER. SEE PLANTING AND IRRIGATION SHEETS.	
14.		
15.	EXISTING HARDSCAPE TO REMAIN	
16.		
17.	SIDEWALK PER CIVIL PLANS.	

HARDSCAPE LEGEND (A)

#	DESCRIPTION	TYPE	COLOR	FINISH	MANUFACTURER
A	CONCRETE	-	STANDARD GREY	LIGHT BROOM	-
B	COLORED CONCRETE	INTEGRAL	PALOMINO 5447	SAND	DAVIS COLORS
C	COLORED CONCRETE	INTEGRAL	COCOA 6130	SAND	DAVIS COLORS

CONSTRUCTION NOTES

- DIMENSIONS ARE FROM EDGES OF PAVING, FACE OF CURB, FACE OF WALL, CURB RETURN, OR CORNERS OF BUILT ELEMENTS, U.O.N.
- FORM WORK TO BE REVIEWED AND APPROVED PRIOR TO PLACING CONCRETE. PROVIDE 48-HOURS NOTICE TO LANDSCAPE ARCHITECT FOR REVIEW OF FORMS.
- LAYOUT FORM WORK TO CONFORM TO DIMENSIONS AND GRADES INDICATED. CONFIRM THAT DIMENSIONS AND GRADES CONFORM TO MINIMUMS PROVIDED ON THE PLANS AS WELL AS WITHIN MINIMUM OR MAXIMUM REQUIREMENTS FROM ADA OR OTHER APPLICABLE CODES.
- CURVES SHALL BE SMOOTH AND FLOWING WITHOUT ABRUPT ANGLES OR FLAT EDGES.
- SLOPES ON PAVING SHALL NOT EXCEED 5% LONGITUDINAL SLOPE OR 2% CROSS SLOPE, U.O.N.
- CONSTRUCTION AND FINISHES OF THE WORK OF THESE PLANS SHALL CONFORM TO REQUIREMENTS OF ADA OR OTHER APPLICABLE CODES.
- INSTALL IRRIGATION SLEEVES UNDERNEATH AREAS TO RECEIVE PAVING PRIOR TO SETTING THE FORM WORK FOR THE PAVING.

SCALE: 1" = 20'-0"

0' 20' 40' 60'

REGISTERED LANDSCAPE ARCHITECT — MICHAEL L. CLARK — 11/30/25 — LANDSCAPE ARCHITECTS SEAL

AGENCY

PTN._____ - _____ APPL._____ - _____

FLEWELLING & MOODY
architecture planning interiors

HEADQUARTERS OFFICE:
815 Colorado Blvd, Suite 200
Los Angeles, CA. 90041
P 323.543.8300
E-Mail: fm-pasadena@flewelling-moody.com

ANTELOPE VALLEY OFFICE:
1035 West Lancaster Boulevard
Lancaster, California 93534
P 661.949.0771
E-Mail: fm-lancaster@flewelling-moody.com

An Employee Owned Corporation

ARCHITECT

CONSULTANT

OASIS ASSOCIATES
LANDSCAPE ARCHITECTURE + PLANNING
3427 MIGUELITO COURT
SAN LUIS OBISPO
CALIFORNIA 93401
P 805.541.4509
F 805.546-0525
RLA 2248 CLARB #907

Drawn by SDW

Checked by MLC

Revisions

No.	Date	Description
1	08/27/2025	BID ALTERNATE

All dimensions must be checked at the job by the contractor who accepts full responsibility for their accuracy under the contract. These plans & the specifications in connection therewith have been prepared for a specific site. Any and all responsibility for their use in whole or in part on any other site is hereby disclaimed by Flewelling & Moody.

CITY OF RIDGECREST

SGT. JOHN PINNEY MEMORIAL
POOL REPLACEMENT

205 S. WARNER STREET
RIDGECREST, CA 93555

Drawing Title

LANDSCAPE
CONSTRUCTION
PLAN
ENLARGEMENTS - ALT 2

Job No. 3055.0000

Sheet No. L1.02A2

Date 6-5-2025

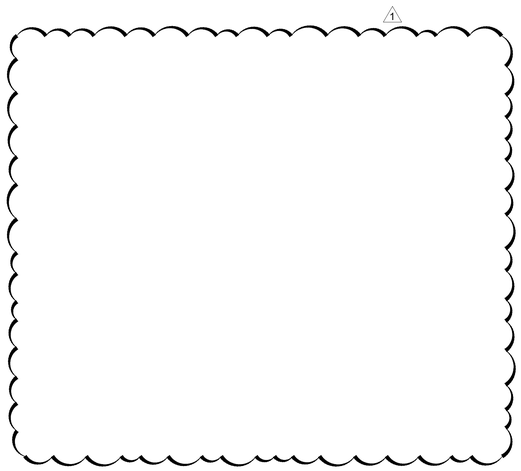

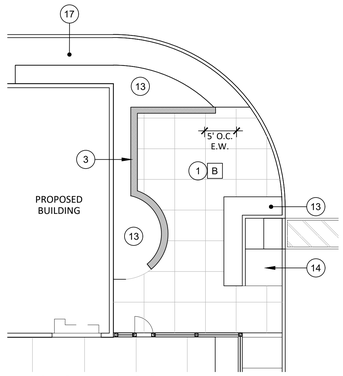

ENLARGEMENT 'B'
SCALE: 1"=10'

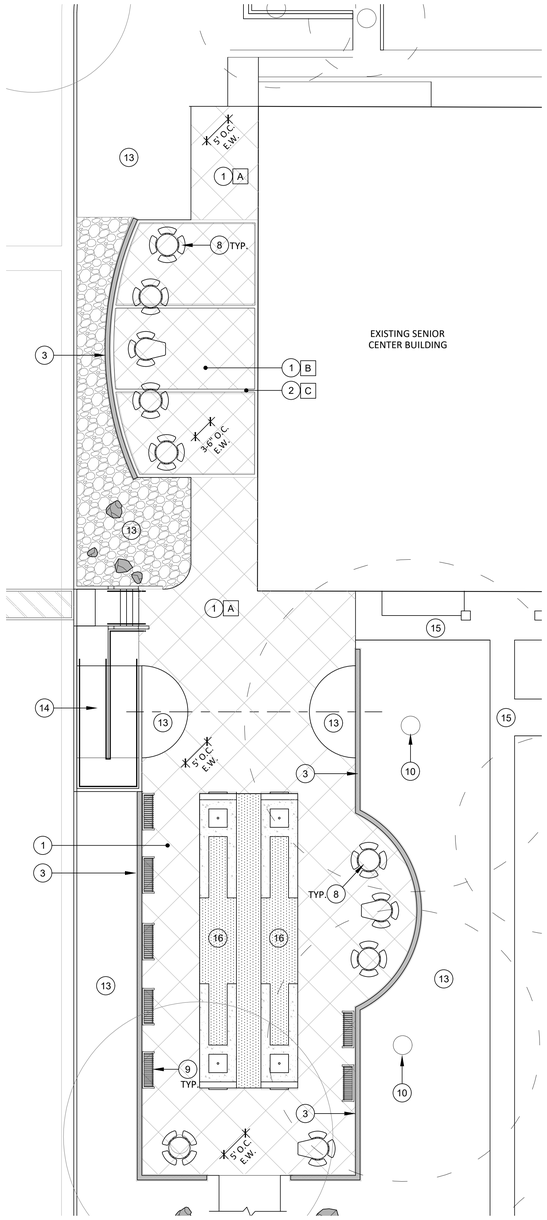

ENLARGEMENT 'E'
SCALE: 1"=10'

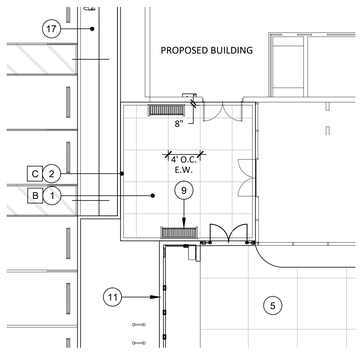

ENLAGEMENT 'C'
SCALE: 1"=10'

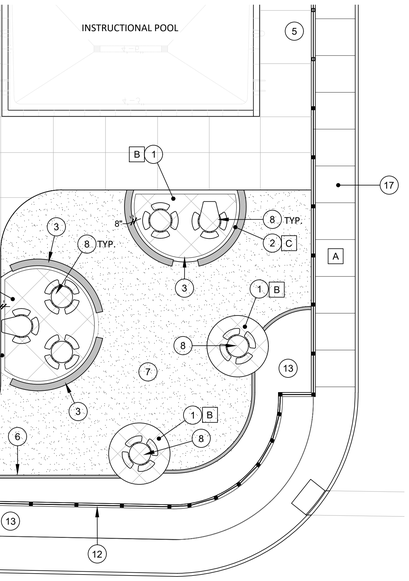

ENLARGEMENT 'D'
SCALE: 1"=10'

CONSTRUCTION PLAN KEYNOTES (1)

#	DESCRIPTION	REFERENCE
1.	CONCRETE PAVING. SEE HARDSCAPE FINISH LEGEND, BELOW.	DETAIL 1a & 1B, SHEET L1.03A6
2.	8" WIDE COLORED CONCRETE BAND	DETAIL 1a & 1B, SHEET L1.03A6
3.	18" TALL BLOCK SEATWALL WITH STUCCO FINISH.	DETAIL 2, SHEET L1.03A6
4.	NOT USED.	
5.	CONCRETE POOL DECK, PER AQUATIC PLANS	
6.	6" CONCRETE TURF HEADER	DETAIL 3, SHEET L1.03A6
7.	SOD TURF	
8.	PICNIC TABLE SHALL BE "FOOD COURT ROUND" QR-42FC (QTY. 12) AND QR-42FC-ADA (QTY. 5), WHERE SHOWN. FINISH: CRAFTSMAN'S ETCH. COLOR AT POOL: MISSION WHITE. COLOR AT SENIOR CENTER: LATTE. INSTALL PER MANF'S INSTRUCTIONS. AVAILABLE FROM QCP 866-703-3434.	
9.	BENCH SHALL BE "Y2" Q4-Y272B (QTY. 10). FINISH: CRAFTSMAN'S ETCH. COLOR AT POOL: MISSION WHITE. COLOR AT SENIOR CENTER: LATTE. INSTALL PER MANF'S INSTRUCTIONS. AVAILABLE FROM QCP 866-703-3434.	
10.	EXISTING TREE TO REMAIN	
11.	FENCE/WALL PER ARCHITECT'S PLAN	
12.	FENCE PER ARCHITECT'S PLANS	
13.	AT-GRADE PLANTER. SEE PLANTING AND IRRIGATION SHEETS.	
14.	RAMP PER CIVIL'S PLANS	
15.	EXISTING HARDSCAPE TO REMAIN	
16.	HORSESHOE PIT (2)	DETAIL 5, SHEET L1.03A6
17.	SIDEWALK PER CIVIL PLANS.	

HARDSCAPE LEGEND (A)

#	DESCRIPTION	TYPE	COLOR	FINISH	MANUFACTURER
A	CONCRETE	-	STANDARD GREY	LIGHT BROOM	-
B	COLORED CONCRETE	INTEGRAL	PALOMINO 5447	SAND	DAVIS COLORS
C	COLORED CONCRETE	INTEGRAL	COCOA 6130	SAND	DAVIS COLORS

CONSTRUCTION NOTES

- DIMENSIONS ARE FROM EDGES OF PAVING, FACE OF CURB, FACE OF WALL, CURB RETURN, OR CORNERS OF BUILT ELEMENTS, U.O.N.
- FORM WORK TO BE REVIEWED AND APPROVED PRIOR TO PLACING CONCRETE. PROVIDE 48-HOURS NOTICE TO LANDSCAPE ARCHITECT FOR REVIEW OF FORMS.
- LAYOUT FORM WORK TO CONFORM TO DIMENSIONS AND GRADES INDICATED. CONFIRM THAT DIMENSIONS AND GRADES CONFORM TO MINIMUMS PROVIDED ON THE PLANS AS WELL AS WITHIN MINIMUM OR MAXIMUM REQUIREMENTS FROM ADA OR OTHER APPLICABLE CODES.
- CURVES SHALL BE SMOOTH AND FLOWING WITHOUT ABRUPT ANGLES OR FLAT EDGES.
- SLOPES ON PAVING SHALL NOT EXCEED 5% LONGITUDINAL SLOPE OR 2% CROSS SLOPE, U.O.N.
- CONSTRUCTION AND FINISHES OF THE WORK OF THESE PLANS SHALL CONFORM TO REQUIREMENTS OF ADA OR OTHER APPLICABLE CODES.
- INSTALL IRRIGATION SLEEVES UNDERNEATH AREAS TO RECEIVE PAVING PRIOR TO SETTING THE FORM WORK FOR THE PAVING.

SCALE: 1" = 20'-0"

0' 20' 40' 60'

REGISTERED LANDSCAPE ARCHITECT — 11/30/25 — LANDSCAPE ARCHITECTS SEAL

AGENCY

PTN._____ - APPL._____ -

FLEWELLING & MOODY
architecture planning interiors

HEADQUARTERS OFFICE:
815 Colorado Blvd, Suite 200
Los Angeles, CA 90041
P 323.543.8300
E-Mail: fm-pasadena@flewelling-moody.com

ANTELOPE VALLEY OFFICE:
1035 West Lancaster Boulevard
Lancaster, California 93534
P 661.949.0771
E-Mail: fm-lancaster@flewelling-moody.com

An Employee Owned Corporation

ARCHITECT

CONSULTANT

OASIS ASSOCIATES
LANDSCAPE ARCHITECTURE + PLANNING
3427 MIGUELITO COURT
SAN LUIS OBISPO
CALIFORNIA 93401
P 805.541.4509
F 805.546-0525
RLA 2248 CLARB #907

Drawn by SDW

Checked by MLC

Revisions

No.	Date	Description
1	08/27/2025	BID ALTERNATE

All dimensions must be checked at the job by the contractor who accepts full responsibility for their accuracy under the contract. These plans & the specifications in connection therewith have been prepared for a specific site. Any and all responsibility for their use in whole or in part on any other site is hereby disclaimed by Flewelling & Moody.

CITY OF RIDGECREST

SGT. JOHN PINNEY MEMORIAL
POOL REPLACEMENT

205 S. WARNER STREET
RIDGECREST, CA 93555

Drawing Title

LANDSCAPE
CONSTRUCTION
PLAN
ENLARGEMENTS - ALT 6

Job No. 3055.0000

Sheet No. L1.02A6

Date 6-5-2025

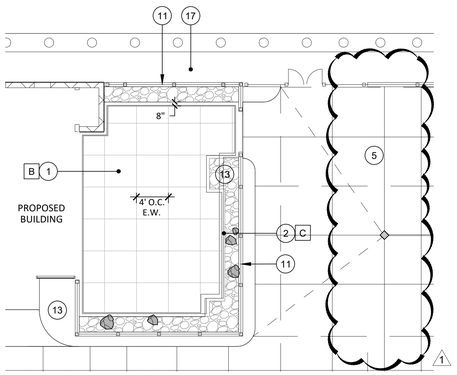

ENLARGEMENT 'A'
SCALE: 1"=10'

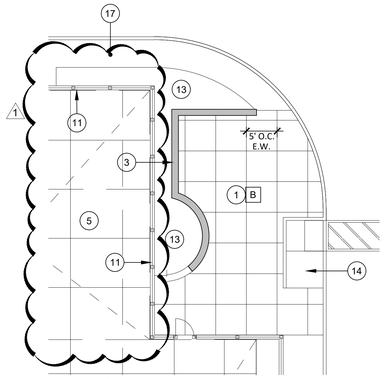

ENLARGEMENT 'B'
SCALE: 1"=10'

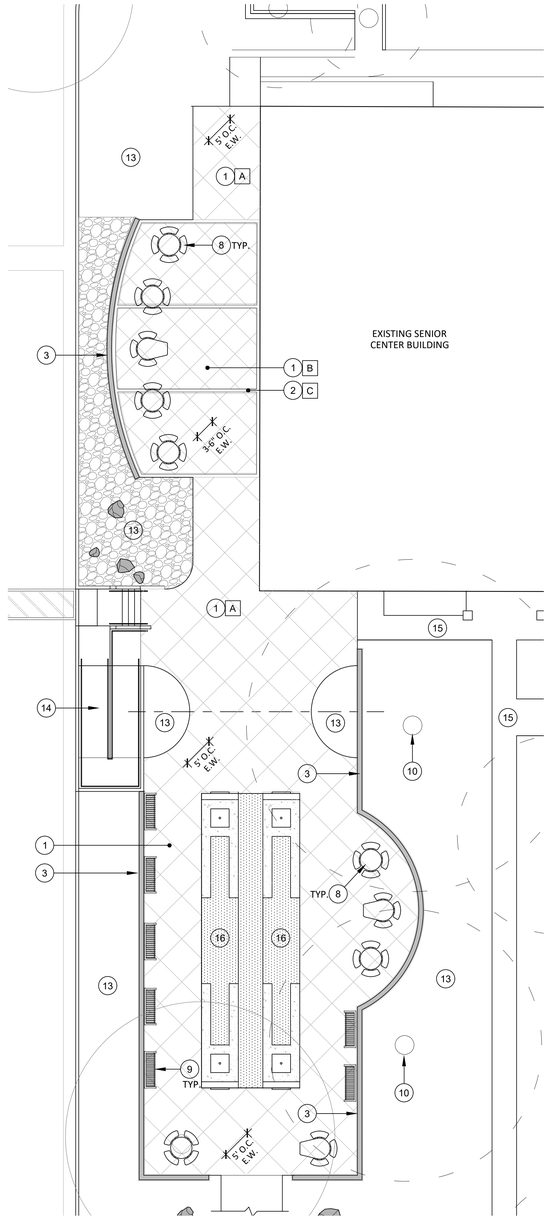

ENLARGEMENT 'E'
SCALE: 1"=10'

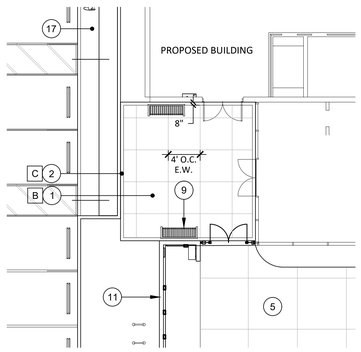

ENLAGEMENT 'C'
SCALE: 1"=10'

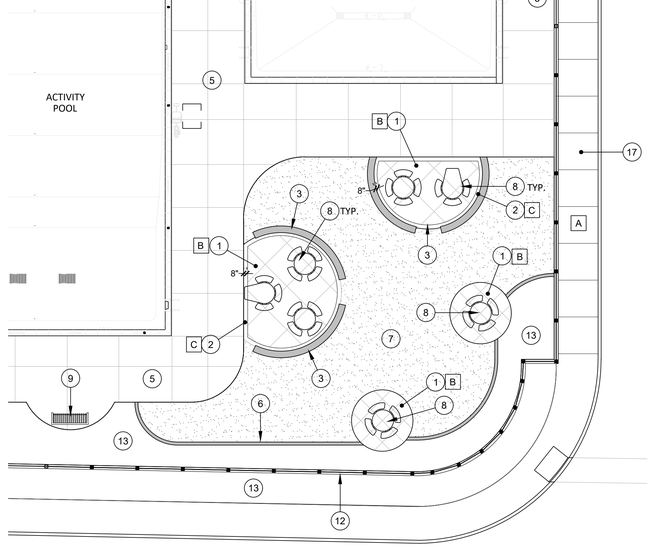

ENLARGEMENT 'D'
SCALE: 1"=10'

CONSTRUCTION PLAN KEYNOTES (1)

#	DESCRIPTION	REFERENCE
1.	CONCRETE PAVING. SEE HARDSCAPE FINISH LEGEND, BELOW.	DETAIL 1a & 1B, SHEET L1.03
2.	8" WIDE COLORED CONCRETE BAND	DETAIL 1a & 1B, SHEET L1.03
3.	18" TALL BLOCK SEATWALL WITH STUCCO FINISH.	DETAIL 2, SHEET L1.03
4.	NOT USED.	
5.	CONCRETE POOL DECK, PER AQUATIC PLAN$	
6.	6" CONCRETE TURF HEADER	DETAIL 3, SHEET L1.03
7.	SOD TURF	
8.	PICNIC TABLE SHALL BE "FOOD COURT ROUND" QR-42FC (QTY. 12) AND QR-42FC-ADA (QTY. 5), WHERE SHOWN. FINISH: CRAFTSMAN'S ETCH. COLOR AT POOL: MISSION WHITE. COLOR AT SENIOR CENTER: LATTE. INSTALL PER MANF'S INSTRUCTIONS. AVAILABLE FROM QCP 866-703-3434.	
9.	BENCH SHALL BE "Y2" Q4-Y272B (QTY. 10). FINISH: CRAFTSMAN'S ETCH. COLOR AT POOL: MISSION WHITE. COLOR AT SENIOR CENTER: LATTE. INSTALL PER MANF'S INSTRUCTIONS. AVAILABLE FROM QCP 866-703-3434.	
10.	EXISTING TREE TO REMAIN	
11.	FENCE/WALL PER ARCHITECT'S PLAN	
12.	FENCE PER ARCHITECT'S PLANS	
13.	AT-GRADE PLANTER. SEE PLANTING AND IRRIGATION SHEETS.	
14.	RAMP PER CIVIL'S PLANS	
15.	EXISTING HARDSCAPE TO REMAIN	
16.	HORSESHOE PIT (2)	DETAIL 5, SHEET L1.03
17.	SIDEWALK PER CIVIL PLANS.	

HARDSCAPE LEGEND (A)

#	DESCRIPTION	TYPE	COLOR	FINISH	MANUFACTURER
A	CONCRETE	-	STANDARD GREY	LIGHT BROOM	-
B	COLORED CONCRETE	INTEGRAL	PALOMINO 5447	SAND	DAVIS COLORS
C	COLORED CONCRETE	INTEGRAL	COCOA 6130	SAND	DAVIS COLORS

CONSTRUCTION NOTES

- DIMENSIONS ARE FROM EDGES OF PAVING, FACE OF CURB, FACE OF WALL, CURB RETURN, OR CORNERS OF BUILT ELEMENTS, U.O.N.
- FORM WORK TO BE REVIEWED AND APPROVED PRIOR TO PLACING CONCRETE. PROVIDE 48-HOURS NOTICE TO LANDSCAPE ARCHITECT FOR REVIEW OF FORMS.
- LAYOUT FORM WORK TO CONFORM TO DIMENSIONS AND GRADES INDICATED. CONFIRM THAT DIMENSIONS AND GRADES CONFORM TO MINIMUMS PROVIDED ON THE PLANS AS WELL AS WITHIN MINIMUM OR MAXIMUM REQUIREMENTS FROM ADA OR OTHER APPLICABLE CODES.
- CURVES SHALL BE SMOOTH AND FLOWING WITHOUT ABRUPT ANGLES OR FLAT EDGES.
- SLOPES ON PAVING SHALL NOT EXCEED 5% LONGITUDINAL SLOPE OR 2% CROSS SLOPE, U.O.N.
- CONSTRUCTION AND FINISHES OF THE WORK OF THESE PLANS SHALL CONFORM TO REQUIREMENTS OF ADA OR OTHER APPLICABLE CODES.
- INSTALL IRRIGATION SLEEVES UNDERNEATH AREAS TO RECEIVE PAVING PRIOR TO SETTING THE FORM WORK FOR THE PAVING.

SCALE: 1" = 20'-0"

0' 20' 40' 60'

REGISTERED LANDSCAPE ARCHITECT — MICHAEL L. CLARB — 6505 — 11/30/25 — LICENSE — LANDSCAPE ARCHITECTS SEAL

AGENCY

PTN._____ APPL._____

FLEWELLING & MOODY
architecture planning interiors

HEADQUARTERS OFFICE:
815 Colorado Blvd, Suite 200
Los Angeles, CA. 90041
P 323.543.8300
E-Mail: fm-pasadena@flewelling-moody.com

ANTELOPE VALLEY OFFICE:
1035 West Lancaster Boulevard
Lancaster, California 93534
P 661.949.0771
E-Mail: fm-lancaster@flewelling-moody.com

An Employee Owned Corporation

ARCHITECT

CONSULTANT

OASIS ASSOCIATES
LANDSCAPE ARCHITECTURE + PLANNING
3427 MIGUELITO COURT
SAN LUIS OBISPO
CALIFORNIA 93401
P 805.541.4509
F 805.546-0525
RLA 2248 CLARB #907

Drawn by SDW

Checked by MLC

Revisions

No.	Date	Description
1	08/27/2025	BID ALTERNATE

All dimensions must be checked at the job by the contractor who accepts full responsibility for their accuracy under the contract. These plans & the specifications in connection therewith have been prepared for a specific site. Any and all responsibility for their use in whole or in part on any other site is hereby disclaimed by Flewelling & Moody.

CITY OF RIDGECREST

SGT. JOHN PINNEY MEMORIAL
POOL REPLACEMENT

205 S. WARNER STREET
RIDGECREST, CA 93555

Drawing Title

LANDSCAPE
CONSTRUCTION
PLAN
ENLARGEMENTS - ALT 7

Job No. 3055.0000

Sheet No. L1.02A7

Date 6-5-2025

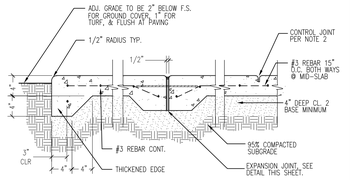

NOTES:
1. EXPANSION JOINTS SHALL BE SPACED 20' O.C. EACH WAY, MAX. CONTROL JOINTS SPACING PER PLAN. REFER TO DETAIL 1b/L1.03.
2. CONTROL JOINTS TO BE 1/8" WIDE X 1/4 DEPTH OF CONC. JOINTS TO OCCUR AT ALL HARDSCAPE CORNERS.
3. APPLY THICKENED EDGE AT ALL PERIMETERS AND/OR WHERE NOTED.
4. MAX CROSS SLOPE SHALL NOT EXCEED 2%.
5. LIGHT BROOM SURFACE FINISH UNLESS OTHERWISE SPECIFIED
6. INSTALL EXPANSION JOINTS WHERE ALL NEW CONCRETE ABUTS EXISTING WITH REBAR DOWELS PLACED 36" ON CENTER (DRILL INTO EX. CONC. 6" MIN. DEPTH).

1A CONCRETE PAVING

NOT TO SCALE

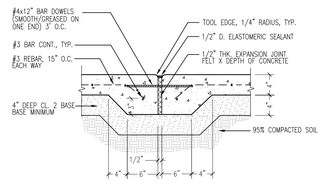

NOTES:
1. INSTALL JOINTS 20' ON CENTER MAXIMUM.
2. REFER TO PLAN FOR ADDITIONAL EXPANSION JOINT LOCATIONS.
3. INSTALL JOINTS WHERE ALL NEW CONCRETE ABUTS EXISTING WITH REBAR DOWELS PLACED 36" ON CENTER (DRILL INTO EX. CONC. 6" MIN. DEPTH).

1B EXPANSION JOINT

NOT TO SCALE

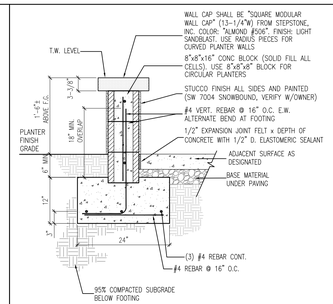

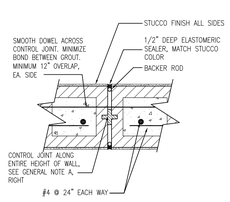

PLAN VIEW- NO SCALE

NOTES:
1) CONTROL JOINTS SPACED 30' O.C.
2) REFER TO GENERAL NOTES, RIGHT, FOR ADDITIONAL REQIREMENTS

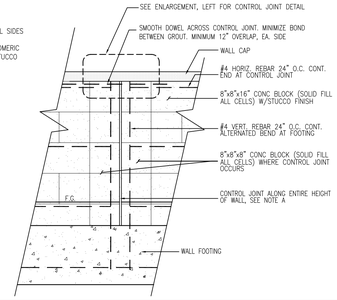

GENERAL NOTES:
1. THESE PLANTER WALL DESIGNS ARE BASED ON UNIFORM SOIL CONDITIONS. ACTUAL SOIL CONDITIONS WHICH DEVIATE APPRECIABLY FROM THOSE ASSUMED, AND SITUATIONS BEYOND THOSE TABULATED, SHALL REQUIRE INDIVIDUAL CONSIDERATION.
2. REINFORCING STEEL SHALL CONFORM TO ASTM A615 GRADE 40.
3. SPLICES IN REINFORCEMENT JSHALL BE LAPPED A MIN. OF 30 BAR DIA.
4. CONCRETE SHALL BE CLASS B (5 SACKS PER CUBIC YARD).
5. MAXIMUM AGGREGATE SIZE = 1".
6. VIBRATE ALL CONC. AND GROUT IN PLACE WITH A MECHANICAL VIBRATOR.

SPECIFIC NOTES:
A. WALL CONTROL JOINT SHALL BE "DA2025" RAPID "I" JOINT RUBBER CONTROL JOINT, BY DUR-O-WAL.

2 SEATWALL W/CAP

SCALE: 3/8"=1'-0"

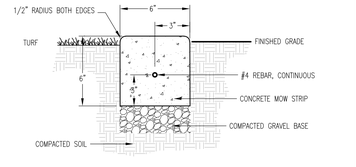

NOTES:
1. EXPANSION JOINTS 20' O.C.
2. INSTALL HEADER BETWEEN ALL TURF AND PLANTER AREAS.

3 CONCRETE HEADER

NOT TO SCALE

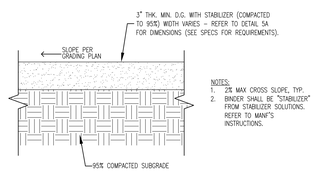

NOTES:
1. 2% MAX CROSS SLOPE, TYP.
2. BINDER SHALL BE "STABILIZER" FROM STABILIZER SOLUTIONS. REFER TO MANF'S INSTRUCTIONS.

4 DECOMPOSED GRANITE

NOT TO SCALE

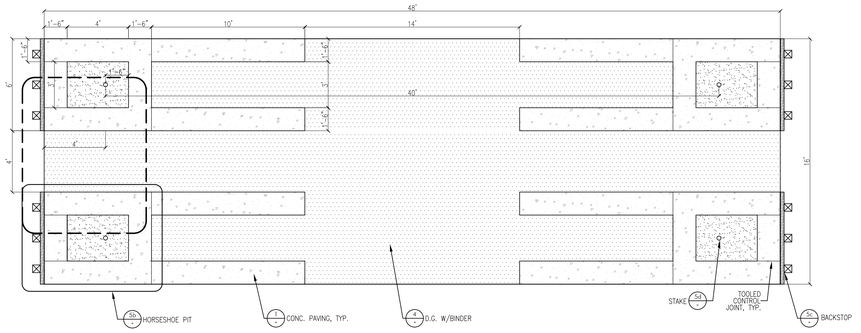

5a HORSESHOE PITS

SCALE: 1/4"=1'-0"

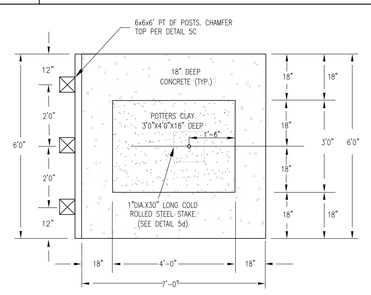

5b HORSESHOE PIT DETAIL

SCALE: 1/2"=1'-0"

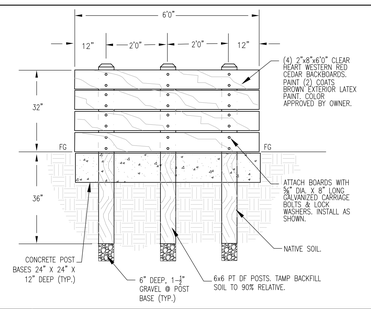

5c HORSESHOE PIT BACKSTOP & POSTS

SCALE: 1/2"=1'-0"

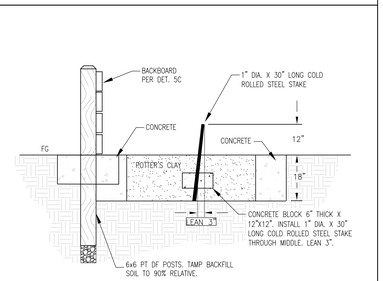

5d HORSESHOE PIT STAKE DETAIL

SCALE: 1/2"=1'-0"

LANDSCAPE ARCHITECTS SEAL

AGENCY

REVIEWED FOR CODE COMPLIANCE BY:
WILLDAN ENGINEERING

Approval of these plans & specifications shall not be construed to be a permit for, or an approval of any violation of any Federal, State, County or City laws or ordinances. One set of approved plans must be kept on the job until completion.

9:26:03 AM Jul 21, 2025

PTN._____ APPL._____

FLEWELLING & MOODY
architecture planning interiors

HEADQUARTERS OFFICE:
815 Colorado Blvd, Suite 200
Los Angeles, CA. 90041
P 323.543.8300
E-Mail: fm-pasadena@flewelling-moody.com

ANTELOPE VALLEY OFFICE:
1035 West Lancaster Boulevard
Lancaster, California 93534
P 661.949.0771
E-Mail: fm-lancaster@flewelling-moody.com

An Employee Owned Corporation

ARCHITECT

CONSULTANT

OASIS ASSOCIATES
LANDSCAPE ARCHITECTURE • PLANNING

3427 MIGUELITO COURT
SAN LUIS OBISPO
CALIFORNIA 93401
P 805.541.4509
F 805.546-0525
RLA 2248 CLARB #907

Drawn by: SDW

Checked by: MLC

Revisions

No.	Date	Description

All dimensions must be checked at the job by the contractor who accepts full responsibility for their accuracy under the contract. These plans & the specifications & or connection therewith have been prepared for a specific site. Any and all responsibility for their use in whole or in part on any other site is hereby disclaimed by Flewelling & Moody.

CITY OF RIDGECREST

SGT. JOHN PINNEY MEMORIAL POOL REPLACEMENT

205 S. WARNER STREET
RIDGECREST, CA 93555

Drawing Title

LANDSCAPE CONSTRUCTION DETAILS

Job No. 3055-0100

Date 3-31-2025

Sheet No. L1.03

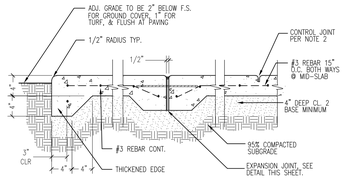

NOTES:
1. EXPANSION JOINTS SHALL BE SPACED 20' O.C. EACH WAY, MAX. CONTROL JOINTS SPACING PER PLAN. REFER TO DETAIL 1b/L1.03.
2. CONTROL JOINTS TO BE 1/8" WIDE X 1/4 DEPTH OF CONC. JOINTS TO OCCUR AT ALL HARDSCAPE CORNERS.
3. APPLY THICKENED EDGE AT ALL PERIMETERS AND/OR WHERE NOTED.
4. MAX CROSS SLOPE SHALL NOT EXCEED 2%.
5. LIGHT BROOM SURFACE FINISH UNLESS OTHERWISE SPECIFIED
6. INSTALL EXPANSION JOINTS WHERE ALL NEW CONCRETE ABUTS EXISTING WITH REBAR DOWELS PLACED 36" ON CENTER (DRILL INTO EX. CONC. 6" MIN. DEPTH).

1A CONCRETE PAVING

NOT TO SCALE

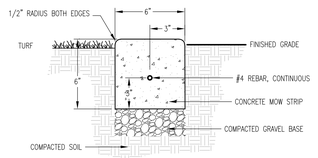

NOTES:
1. EXPANSION JOINTS 20' O.C.
2. INSTALL HEADER BETWEEN ALL TURF AND PLANTER AREAS.

3 CONCRETE HEADER

NOT TO SCALE

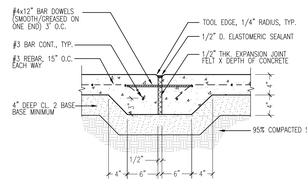

NOTES:
1. INSTALL JOINTS 20' ON CENTER MAXIMUM.
2. REFER TO PLAN FOR ADDITIONAL EXPANSION JOINT LOCATIONS.
3. INSTALL JOINTS WHERE ALL NEW CONCRETE ABUTS EXISTING WITH REBAR DOWELS PLACED 36" ON CENTER (DRILL INTO EX. CONC. 6" MIN. DEPTH).

1B EXPANSION JOINT

NOT TO SCALE

2 SEATWALL W/CAP

SCALE: 3/8"=1'-0"

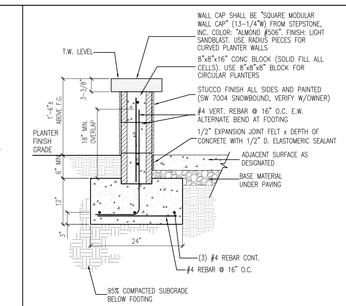

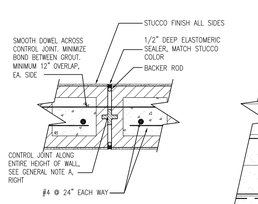

PLAN VIEW- NO SCALE

NOTES:
1) CONTROL JOINTS SPACED 30' O.C.
2) REFER TO GENERAL NOTES, RIGHT, FOR ADDITIONAL REQIREMENTS

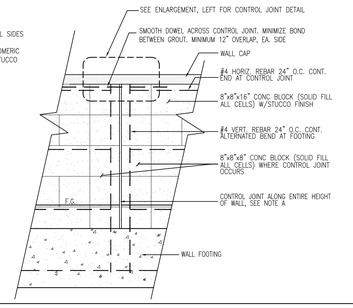

GENERAL NOTES:
1. THESE PLANTER WALL DESIGNS ARE BASED ON UNIFORM SOIL CONDITIONS. ACTUAL SOIL CONDITIONS WHICH DEVIATE APPRECIABLY FROM THOSE ASSUMED, AND SITUATIONS BEYOND THOSE TABULATED, SHALL REQUIRE INDIVIDUAL CONSIDERATION.
2. REINFORCING STEEL SHALL CONFORM TO ASTM A615 GRADE 40.
3. SPLICES IN REINFORCEMENT SHALL BE LAPPED A MIN. OF 30 BAR DIA.
4. CONCRETE SHALL BE CLASS B (5 SACKS PER CUBIC YARD).
5. MAXIMUM AGGREGATE SIZE = 1".
6. VIBRATE ALL CONC. AND GROUT IN PLACE WITH A MECHANICAL VIBRATOR.

SPECIFIC NOTES:
A. WALL CONTROL JOINT SHALL BE "DA2025" RAPID "I" JOINT RUBBER CONTROL JOINT, BY DUR-O-WAL.

LANDSCAPE ARCHITECTS SEAL

AGENCY

PTN._____ APPL._____

FLEWELLING & MOODY
architecture planning interiors

HEADQUARTERS OFFICE:
815 Colorado Blvd, Suite 200
Los Angeles, CA 90041
P 323.543.8300
E-Mail: fm-pasadena@flewelling-moody.com

ANTELOPE VALLEY OFFICE:
1035 West Lancaster Boulevard
Lancaster, California 93534
P 661.949.0771
E-Mail: fm-lancaster@flewelling-moody.com

An Employee Owned Corporation

ARCHITECT

CONSULTANT

OASIS ASSOCIATES
LANDSCAPE ARCHITECTURE + PLANNING

3427 MIGUELITO COURT
SAN LUIS OBISPO
CALIFORNIA 93401
P 805.541.4509
F 805.546-0525
RLA 2248 CLARB #7907

Drawn by: SDW

Checked by: MLC

Revisions

No.	Date	Description
1	08/27/2025	BID ALTERNATE

All dimensions must be checked at the job by the contractor who accepts full responsibility for their accuracy under the contract. These plans & the specifications in connection therewith have been prepared for a specific site. Any and all responsibility for their use in whole or in part on any other site is hereby disclaimed by Flewelling & Moody.

CITY OF RIDGECREST

SGT. JOHN PINNEY MEMORIAL POOL REPLACEMENT

205 S. WARNER STREET
RIDGECREST, CA 93555

Drawing Title

LANDSCAPE CONSTRUCTION DETAILS ALT 2

Job No. 3055.0000

Date 6-5-2025

Sheet No. L1.03A2

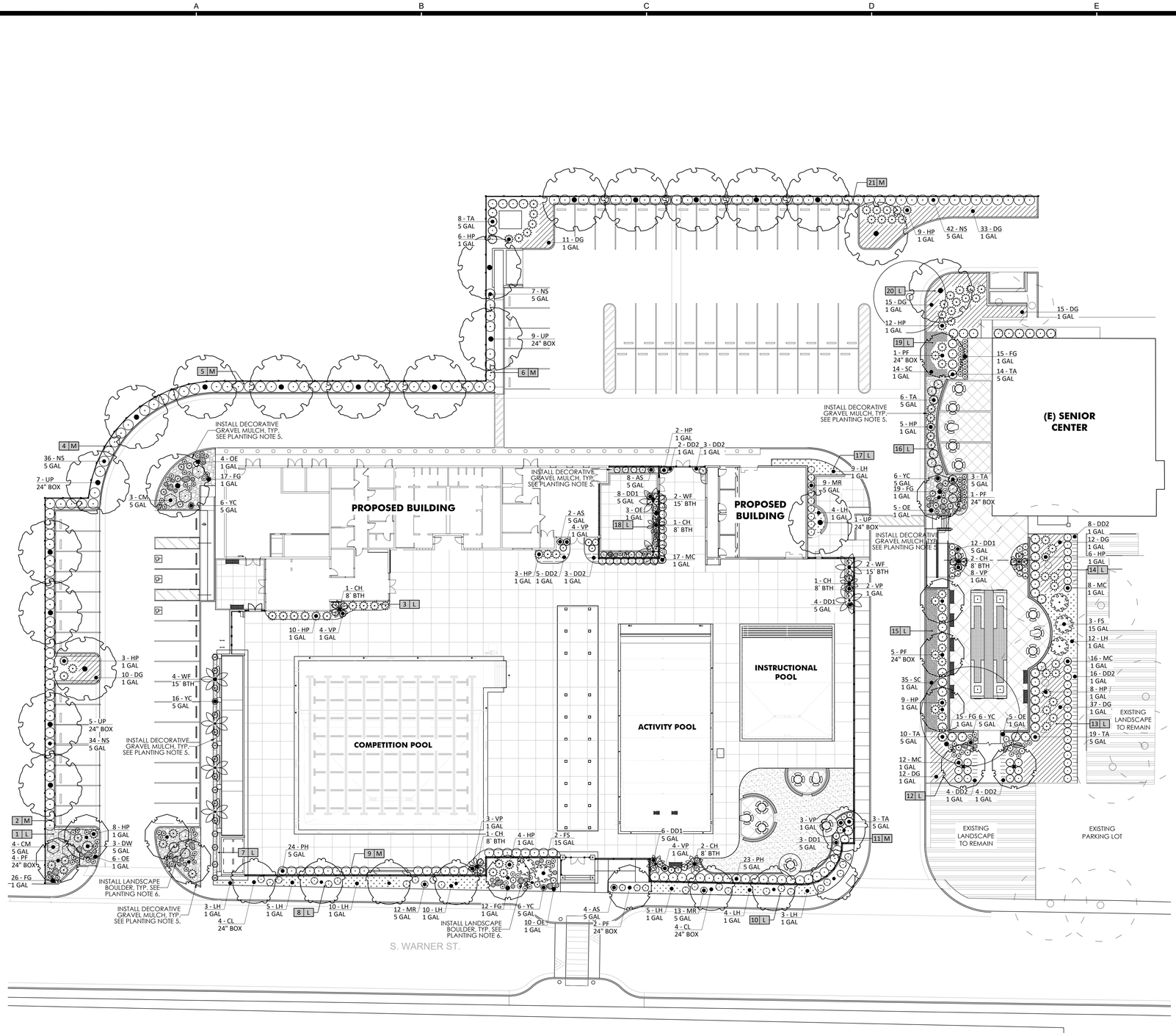

PLANT LEGEND

SYMBOL	CODE	BOTANICAL / COMMON NAME	SIZE	WUCOLS	DETAILS	QTY
TREES					SHEET L4.01	
	CH	CHAMAEROPS HUMILIS MEDITERRANEAN FAN PALM	8` BTH	M	2D	8
	CL	CHILOPSIS LINEARIS DESERT WILLOW	24" BOX	M	2A, 2B, 2C	8
	PF	PARKINSONIA FLORIDA BLUE PALO VERDE	24" BOX	L	2A, 2B, 2C	13
	UP	ULMUS PARVIFOLIA LACEBARK ELM	24" BOX	M	2A, 2B, 2C	22
	WF	WASHINGTONIA FILIFERA CALIFORNIA FAN PALM	15` BTH	M	2D	8
SHRUBS						
	AS	ASCLEPIAS SUBULATA RUSH MILKWEED	5 GAL	L	1	14
	CM	CAESALPINEA MEXICANA MEXICAN BIRD OF PARADISE	5 GAL	L	1	7
	DD1	DALEA CAPITATA DALEA	5 GAL	L	1	33
	DW	DASYLIRION WHEELERI GREY DESERT SPOON	5 GAL	L	1	3
	FG	FESTUCA OVINA GLAUCA BLUE SHEEP FESCUE	1 GAL	M	1	113
	FS	FOUQUIERIA SPLENDENS OCOTILLO	15 GAL	VL	1	5
	HP	HESPERALOE PARVIFLORA RED YUCCA	1 GAL	L	1	88
	MC	MUHLENBERGIA CAPILLARIS PINK MUHLY GRASS	1 GAL	M	1	53
	MR	MUHLENBERGIA RIGENS DEER GRASS	5 GAL	M	1	33
	NS	NERIUM OLEANDER `PETITE SALMON` PETITE SALMON OLEANDER	5 GAL	L	1	118
	OE	OENOTHERA STUBBEI BAJA EVENING PRIMROSE	1 GAL	L	1	33
	PH	PHOTINIA X FRASERI RED TIP PHOTINIA	5 GAL	M	1	47
	TA	TEUCRIUM FRUTICANS `AZUREUM` AZURE BUSH GERMANDER	5 GAL	M	1	62
	VP	VERBENA PULCHELLA ROCK VERBENA	1 GAL	L	1	28
	YC	YUCCA FILAMENTOSA `COLOR GUARD` COLOR GUARD ADAM`S NEEDLE	5 GAL	L	1	38

SYMBOL	CODE	BOTANICAL / COMMON NAME	SIZE	WUCOLS	DETAILS	SPACING	QTY
GROUND COVERS							
	DD2	DALEA CAPITATA DALEA	1 GAL	L	3A	36" o.c.	45
	DG	DALEA GREGGII TRAILING INDIGO BUSH	1 GAL	L	3A	48" o.c.	145
	LH	LANTANA X `NEW GOLD` NEW GOLD LANTANA	1 GAL	M	3A	48" o.c.	60
	SC	SANTOLINA CHYMAECYPARISSUS LAVENDER COTTON	1 GAL	L	3A	36" o.c.	49

SOD TURF - REFER TO SPECIFICATIONS FOR TYPE

DECORATIVE GRAVEL MULCH - SEE NOTE 5, BELOW

LANDSCAPE CERTIFICATION

The landscape plans, in addition to the related details and specifications, adhere to all of the project's conditions of approval pertaining to landscaping, City Landscape Guidelines, and MWELO landscape ordinance.

Michael L. Cripe, ASLA

PLANTING NOTES

1. QUANTITIES AND SIZES SHOWN IN THE PLANT LEGEND ARE FOR REFERENCE ONLY AND SHALL BE VERIFIED BY THE CONTRACTOR. NOTIFY PROJECT LANDSCAPE ARCHITECT OF ANY MAJOR DISCREPANCIES.
2. ALL PLANTER AREAS, AS DESIGNATED ON THE PLAN, SHALL BE PREPARED AND AMENDED PER THE SPECIFICATIONS. SOIL AMENDMENTS AND PREPARATION SHALL CONFORM TO STATE AB1881 AND LOCAL WATER EFFICIENT LANDSCAPE ORDINANCES.
3. ALL TREES PLANTED WITHIN 7' OF HARDSCAPE OR STRUCTURES SHALL BE INSTALLED WITH A DEEP ROOT PLANTER, PER DETAIL 2B/L4.01.
4. INSTALL MINIMUM 3" THICK BARK MULCH IN ALL PLANTING AREAS EXCEPT WHERE NOTED ON PLAN. REFER TO SPECIFICATIONS FOR TYPE. PROVIDE SAMPLE FOR APPROVAL.
5. INSTALL MINIMUM 2" THICK DECORATIVE GRAVEL MULCH WHERE NOTED ON PLAN. USE CALI GOLD ¾" OR APPROVED EQUAL. PROVIDE PHOTOS FOR APPROVAL.
6. INSTALL LANDSCAPE BOULDERS. PROVIDE (10) 18"D, (11) 24"D, (7) 36"D. USE DESERT BLUSH BOULDERS OR APPROVED EQUAL. PROVIDE PHOTOS FOR APPROVAL.
7. ADJUST PLANT MATERIAL AS NECESSARY AROUND UTILITY LOCATIONS. NOTIFY LANDSCAPE ARCHITECT OF ANY MAJOR CONFLICTS OR NECESSARY ADJUSTMENTS.
8. REVIEW THE PLANTING AND IRRIGATION SPECIFICATIONS PRIOR TO BIDDING. IF NOT PROVIDED, CONTACT THE LANDSCAPE ARCHITECT.
9. ALL PLANT MATERIAL SPECIFIED ARE IN COMPLIANCE WITH THE INDIAN WELLS WATER DISTRICT (RIDGECREST) APPROVED PLANT LIST.
10. CONTRACTOR TO OBTAIN AGRONOMIC SOILS ANALYSIS WITH INFILTRATION RATES, PRIOR TO CONSTRUCTION. LANDSCAPE ARCHITECT MAY ADJUST PLANTING SOIL PREP, SOIL AMENDMENTS, FERTILIZER (AMONG OTHER ITEMS), DEPENDING ON THE RESULTS OF THE ANALYSIS. REFER TO PLANTING SPEC'S SECTION 1.2B.

SCALE: 1" = 20'-0"

0' 20' 40' 60'

REGISTERED LANDSCAPE ARCHITECT — MICHAEL L. CRIPE — 11/30/25 — 3/31/25 — STATE OF CALIFORNIA

LANDSCAPE ARCHITECTS SEAL

AGENCY

REVIEWED FOR CODE COMPLIANCE BY:
WILLDAN ENGINEERING

Approval of these plans & specifications shall not be construed to be a permit for, or an approval of any violation of any Federal, State, County or City laws or ordinances. One set of approved plans must be kept on the job until completion.

9:26:04 AM Jul 21, 2025

PTN._____-_____ APPL._____-_____

FLEWELLING & MOODY
architecture planning interiors

HEADQUARTERS OFFICE:
815 Colorado Blvd, Suite 200
Los Angeles, CA. 90041
P 323.543.8300
E-Mail: fm-pasadena@flewelling-moody.com

ANTELOPE VALLEY OFFICE:
1035 West Lancaster Boulevard
Lancaster, California 93534
P 661.949.0771
E-Mail: fm-lancaster@flewelling-moody.com

An Employee Owned Corporation

ARCHITECT

CONSULTANT

OASIS ASSOCIATES
LANDSCAPE ARCHITECTURE • PLANNING

3427 MIGUELITO COURT
SAN LUIS OBISPO
CALIFORNIA 93401
P 805.541.4509
F 805.546-0525
RLA 2248 CLARB #907

Drawn by SEW

Checked by MLC

Revisions

No.	Date	Description

All dimensions must be checked at the job by the contractor who accepts full responsibility for their accuracy under the contract. These plans & the specifications in connection therewith have been prepared for a specific site. Any and all responsibility for their use in whole or in part on any other site is hereby disclaimed by Flewelling & Moody.

CITY OF RIDGECREST

SGT. JOHN PINNEY MEMORIAL POOL REPLACEMENT

205 S. WARNER STREET
RIDGECREST, CA 93555

Drawing Title

PLANTING PLAN

Job No. 3055-0100

Sheet No. L2.01

Date 3-31-2025

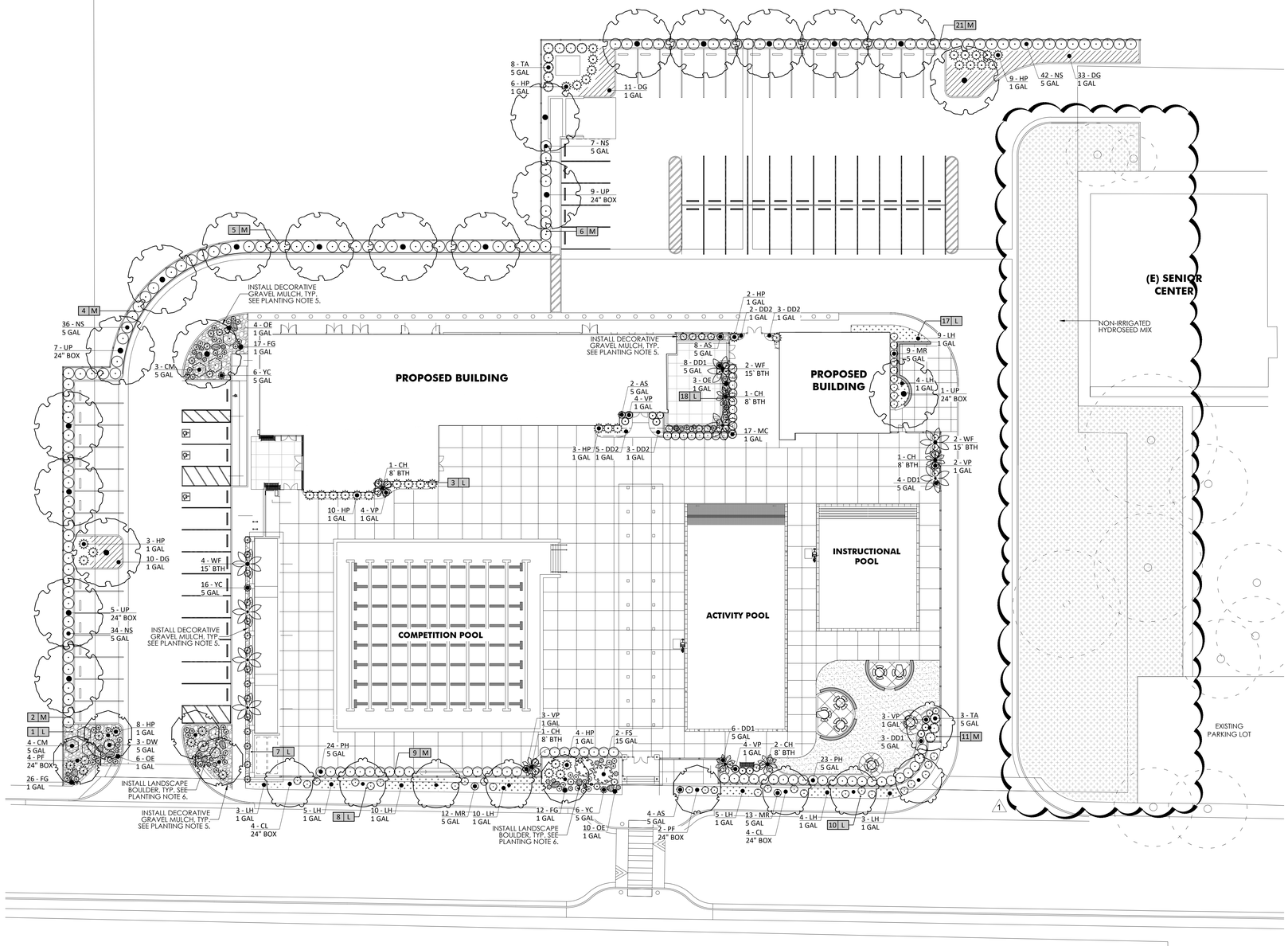

PLANT LEGEND

SYMBOL	CODE	BOTANICAL / COMMON NAME	SIZE	WUCOLS	DETAILS	QTY
TREES					SHEET L4.01	
	CH	CHAMAEROPS HUMILIS MEDITERRANEAN FAN PALM	8` BTH	M	2D	6
	CL	CHILOPSIS LINEARIS DESERT WILLOW	24" BOX	M	2A, 2B, 2C	8
	PF	PARKINSONIA FLORIDA BLUE PALO VERDE	24" BOX	L	2A, 2B, 2C	6
	UP	ULMUS PARVIFOLIA LACEBARK ELM	24" BOX	M	2A, 2B, 2C	21
	WF	WASHINGTONIA FILIFERA CALIFORNIA FAN PALM	15` BTH	M	2D	8
SHRUBS						
	AS	ASCLEPIAS SUBULATA RUSH MILKWEED	5 GAL	L	1	14
	CM	CAESALPINEA MEXICANA MEXICAN BIRD OF PARADISE	5 GAL	L	1	7
	DD1	DALEA CAPITATA DALEA	5 GAL	L	1	21
	DW	DASYLIRION WHEELERI GREY DESERT SPOON	5 GAL	L	1	3
	FG	FESTUCA OVINA GLAUCA BLUE SHEEP FESCUE	1 GAL	M	1	64
	FS	FOUQUIERIA SPLENDENS OCOTILLO	15 GAL	VL	1	2
	HP	HESPERALOE PARVIFLORA RED YUCCA	1 GAL	L	1	45
	MC	MUHLENBERGIA CAPILLARIS PINK MUHLY GRASS	1 GAL	M	1	17
	MR	MUHLENBERGIA RIGENS DEER GRASS	5 GAL	M	1	33
	NS	NERIUM OLEANDER 'PETITE SALMON' PETITE SALMON OLEANDER	5 GAL	L	1	118
	OE	OENOTHERA STUBBEI BAJA EVENING PRIMROSE	1 GAL	L	1	23
	PH	PHOTINIA X FRASERI RED TIP PHOTINIA	5 GAL	M	1	47
	TA	TEUCRIUM FRUTICANS `AZUREUM` AZURE BUSH GERMANDER	5 GAL	M	1	11
	VP	VERBENA PULCHELLA ROCK VERBENA	1 GAL	L	1	20
	YC	YUCCA FILAMENTOSA `COLOR GUARD` COLOR GUARD ADAM`S NEEDLE	5 GAL	L	1	26
GROUND COVERS						
	DD2	DALEA CAPITATA DALEA	1 GAL	L	3A	13
	DG	DALEA GREGGII TRAILING INDIGO BUSH	1 GAL	L	3A	54
	LH	LANTANA X 'NEW GOLD' NEW GOLD LANTANA	1 GAL	M	3A	48
		SOD TURF - REFER TO SPECIFICATIONS FOR TYPE				1
		DECORATIVE GRAVEL MULCH - SEE NOTE 5, BELOW				
		NON-IRRIGATED WILDFLOWER HYDROSEED MIX REFER TO SPECIFICATIONS, SECTION 32-93-00				1

LANDSCAPE CERTIFICATION

The landscape plans, in addition to the related details and specifications, adhere to all of the project's conditions of approval pertaining to landscaping, City Landscape Guidelines, and MWELO landscape ordinance.

Michael L. Cripe, ASLA

PLANTING NOTES

1. QUANTITIES AND SIZES SHOWN IN THE PLANT LEGEND ARE FOR REFERENCE ONLY AND SHALL BE VERIFIED BY THE CONTRACTOR. NOTIFY PROJECT LANDSCAPE ARCHITECT OF ANY MAJOR DISCREPANCIES.
2. ALL PLANTER AREAS, AS DESIGNATED ON THE PLAN, SHALL BE PREPARED AND AMENDED PER THE SPECIFICATIONS. SOIL AMENDMENTS AND PREPARATION SHALL CONFORM TO STATE AB1881 AND LOCAL WATER EFFICIENT LANDSCAPE ORDINANCES.
3. ALL TREES PLANTED WITHIN 7' OF HARDSCAPE OR STRUCTURES SHALL BE INSTALLED WITH A DEEP ROOT PLANTER, PER DETAIL 2B/L4.01.
4. INSTALL MINIMUM 3" THICK BARK MULCH IN ALL PLANTING AREAS EXCEPT WHERE NOTED ON PLAN. REFER TO SPECIFICATIONS FOR TYPE. PROVIDE SAMPLE FOR APPROVAL.
5. INSTALL MINIMUM 2" THICK DECORATIVE GRAVEL MULCH WHERE NOTED ON PLAN. USE CALI GOLD ¾" OR APPROVED EQUAL. PROVIDE PHOTOS FOR APPROVAL.
6. INSTALL LANDSCAPE BOULDERS. PROVIDE (10) 18"D, (11) 24"D, (7) 36"D. USE DESERT BLUSH BOULDERS OR APPROVED EQUAL. PROVIDE PHOTOS FOR APPROVAL.
7. ADJUST PLANT MATERIAL AS NECESSARY AROUND UTILITY LOCATIONS. NOTIFY LANDSCAPE ARCHITECT OF ANY MAJOR CONFLICTS OR NECESSARY ADJUSTMENTS.
8. REVIEW THE PLANTING AND IRRIGATION SPECIFICATIONS PRIOR TO BIDDING. IF NOT PROVIDED, CONTACT THE LANDSCAPE ARCHITECT.
9. ALL PLANT MATERIAL SPECIFIED ARE IN COMPLIANCE WITH THE INDIAN WELLS WATER DISTRICT (RIDGECREST) APPROVED PLANT LIST.
10. CONTRACTOR TO OBTAIN AGRONOMIC SOILS ANALYSIS WITH INFILTRATION RATES, PRIOR TO CONSTRUCTION. LANDSCAPE ARCHITECT MAY ADJUST PLANTING SOIL PREP., SOIL AMENDMENTS, FERTILIZER (AMONG OTHER ITEMS), DEPENDING ON THE RESULTS OF THE ANALYSIS. REFER TO PLANTING SPECS SECTION 1.2B.

SCALE: 1" = 20'-0"

0' 20' 40' 60'

REGISTERED LANDSCAPE ARCHITECT MICHAEL L. CRIPE 5058 11/30/25 RENEWAL STATE OF CALIFORNIA

LANDSCAPE ARCHITECTS SEAL

AGENCY

PTN._____ - _____ APPL._____ - _____

FLEWELLING & MOODY
architecture planning interiors

HEADQUARTERS OFFICE:
815 Colorado Blvd, Suite 200
Los Angeles, CA 90041
P 323.543.8300
E-Mail: fm-pasadena@flewelling-moody.com

ANTELOPE VALLEY OFFICE:
1035 West Lancaster Boulevard
Lancaster, California 93534
P 661.949.0771
E-Mail: fm-lancaster@flewelling-moody.com

An Employee Owned Corporation

ARCHITECT

CONSULTANT

OASIS ASSOCIATES
LANDSCAPE ARCHITECTURE + PLANNING

3427 MIGUELITO COURT
SAN LUIS OBISPO
CALIFORNIA 93401
P 805.541.4509
F 805.546-0525
RLA 2248 CLARB #907

Drawn by SEW

Checked by MLC

Revisions

No.	Date	Description
1	08/27/2025	BID ALTERNATE

All dimensions must be checked at the job by the contractor who accepts full responsibility for their accuracy under the contract. These plans & the specifications in connection therewith have been prepared for a specific site. Any and all responsibility for their use in whole or in part on any other site is hereby disclaimed by Flewelling & Moody.

CITY OF RIDGECREST

SGT. JOHN PINNEY MEMORIAL

POOL REPLACEMENT

205 S. WARNER STREET
RIDGECREST, CA 93555

Drawing Title

PLANTING
PLAN
ALT 2

Job No. 3055.0000

Sheet No. L2.01A2

Date 6-5-2025

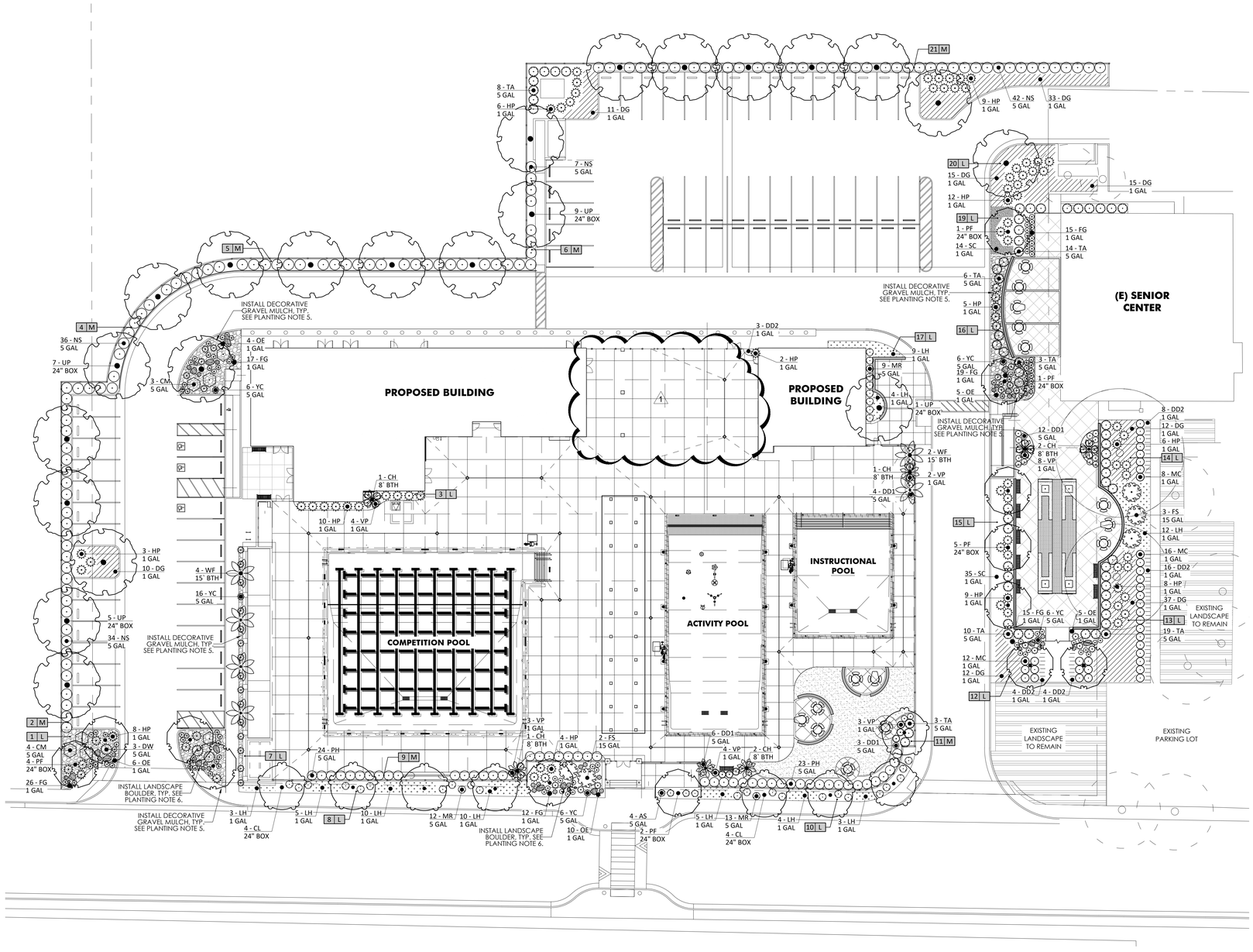

PLANT LEGEND

SYMBOL	CODE	BOTANICAL / COMMON NAME	SIZE	WUCOLS	DETAILS	QTY
TREES						
	CH	CHAMAEROPS HUMILIS MEDITERRANEAN FAN PALM	8` BTH	M	2D	7 / 1
	CL	CHILOPSIS LINEARIS DESERT WILLOW	24" BOX	M	2A, 2B, 2C	8
	PF	PARKINSONIA FLORIDA BLUE PALO VERDE	24" BOX	L	2A, 2B, 2C	13
	UP	ULMUS PARVIFOLIA LACEBARK ELM	24" BOX	M	2A, 2B, 2C	22
	WF	WASHINGTONIA FILIFERA CALIFORNIA FAN PALM	15` BTH	M	2D	6 / 1
SHRUBS						
	AS	ASCLEPIAS SUBULATA RUSH MILKWEED	5 GAL	L	1	4 / 1
	CM	CAESALPINEA MEXICANA MEXICAN BIRD OF PARADISE	5 GAL	L	1	7
	DD1	DALEA CAPITATA DALEA	5 GAL	L	1	25 / 1
	DW	DASYLIRION WHEELERI GREY DESERT SPOON	5 GAL	L	1	3
	FG	FESTUCA OVINA GLAUCA BLUE SHEEP FESCUE	1 GAL	M	1	104 / 1
	FS	FOUQUIERIA SPLENDENS OCOTILLO	15 GAL	VL	1	5
	HP	HESPERALOE PARVIFLORA RED YUCCA	1 GAL	L	1	84
	MC	MUHLENBERGIA CAPILLARIS PINK MUHLY GRASS	1 GAL	M	1	36 / 1
	MR	MUHLENBERGIA RIGENS DEER GRASS	5 GAL	M	1	33
	NS	NERIUM OLEANDER 'PETITE SALMON' PETITE SALMON OLEANDER	5 GAL	L	1	118
	OE	OENOTHERA STUBBEI BAJA EVENING PRIMROSE	1 GAL	L	1	30 / 1
	PH	PHOTINIA X FRASERI RED TIP PHOTINIA	5 GAL	M	1	47
	TA	TEUCRIUM FRUTICANS `AZUREUM` AZURE BUSH GERMANDER	5 GAL	M	1	62
	VP	VERBENA PULCHELLA ROCK VERBENA	1 GAL	L	1	24 / 1
	YC	YUCCA FILAMENTOSA `COLOR GUARD` COLOR GUARD ADAM`S NEEDLE	5 GAL	L	1	38
GROUND COVERS						
	DD2	DALEA CAPITATA DALEA	1 GAL	L	3A	35 / 1
	DG	DALEA GREGGII TRAILING INDIGO BUSH	1 GAL	L	3A	146
	LH	LANTANA X 'NEW GOLD' NEW GOLD LANTANA	1 GAL	M	3A	62
	SC	SANTOLINA CHYMAECYPARISSUS LAVENDER COTTON	1 GAL	L	3A	49
		SOD TURF - REFER TO SPECIFICATIONS FOR TYPE				
		DECORATIVE GRAVEL MULCH - SEE NOTE 5, BELOW				

LANDSCAPE CERTIFICATION

The landscape plans, in addition to the related details and specifications, adhere to all of the project's conditions of approval pertaining to landscaping, City Landscape Guidelines, and MWELO landscape ordinance.

Michael L. Cripe, ASLA

PLANTING NOTES

1. QUANTITIES AND SIZES SHOWN IN THE PLANT LEGEND ARE FOR REFERENCE ONLY AND SHALL BE VERIFIED BY THE CONTRACTOR. NOTIFY PROJECT LANDSCAPE ARCHITECT OF ANY MAJOR DISCREPANCIES.
2. ALL PLANTER AREAS, AS DESIGNATED ON THE PLAN, SHALL BE PREPARED AND AMENDED PER THE SPECIFICATIONS. SOIL AMENDMENTS AND PREPARATION SHALL CONFORM TO STATE AB1881 AND LOCAL WATER EFFICIENT LANDSCAPE ORDINANCES.
3. ALL TREES PLANTED WITHIN 7' OF HARDSCAPE OR STRUCTURES SHALL BE INSTALLED WITH A DEEP ROOT PLANTER, PER DETAIL 2B/L4.01.
4. INSTALL MINIMUM 3" THICK BARK MULCH IN ALL PLANTING AREAS EXCEPT WHERE NOTED ON PLAN. REFER TO SPECIFICATIONS FOR TYPE. PROVIDE SAMPLE FOR APPROVAL.
5. INSTALL MINIMUM 2" THICK DECORATIVE GRAVEL MULCH WHERE NOTED ON PLAN. USE CALI GOLD ¾" OR APPROVED EQUAL. PROVIDE PHOTOS FOR APPROVAL.
6. INSTALL LANDSCAPE BOULDERS. PROVIDE (10) 18"D, (11) 24"D, (7) 36"D. USE DESERT BLUSH BOULDERS OR APPROVED EQUAL. PROVIDE PHOTOS FOR APPROVAL.
7. ADJUST PLANT MATERIAL AS NECESSARY AROUND UTILITY LOCATIONS. NOTIFY LANDSCAPE ARCHITECT OF ANY MAJOR CONFLICTS OR NECESSARY ADJUSTMENTS.
8. REVIEW THE PLANTING AND IRRIGATION SPECIFICATIONS PRIOR TO BIDDING. IF NOT PROVIDED, CONTACT THE LANDSCAPE ARCHITECT.
9. ALL PLANT MATERIAL SPECIFIED ARE IN COMPLIANCE WITH THE INDIAN WELLS WATER DISTRICT (RIDGECREST) APPROVED PLANT LIST.
10. CONTRACTOR TO OBTAIN AGRONOMIC SOILS ANALYSIS WITH INFILTRATION RATES, PRIOR TO CONSTRUCTION. LANDSCAPE ARCHITECT MAY ADJUST PLANTING SOIL PREP., SOIL AMENDMENTS, FERTILIZER (AMONG OTHER ITEMS), DEPENDING ON THE RESULTS OF THE ANALYSIS. REFER TO PLANTING SPECS SECTION 1.2B.

SCALE: 1" = 20'-0"

0' 20' 40' 60'

REGISTERED LANDSCAPE ARCHITECT MICHAEL L. CRIPE 11/30/25 STATE OF CALIFORNIA

LANDSCAPE ARCHITECTS SEAL

AGENCY

PTN._____ - _____ APPL._____ - _____

FLEWELLING & MOODY
architecture planning interiors

HEADQUARTERS OFFICE:
815 Colorado Blvd, Suite 200
Los Angeles, CA 90041
P 323.543.8300
E-Mail: fm-pasadena@flewelling-moody.com

ANTELOPE VALLEY OFFICE:
1035 West Lancaster Boulevard
Lancaster, California 93534
P 661.949.0771
E-Mail: fm-lancaster@flewelling-moody.com

An Employee Owned Corporation

ARCHITECT

CONSULTANT

OASIS ASSOCIATES
LANDSCAPE ARCHITECTURE + PLANNING

3427 MIGUELITO COURT
SAN LUIS OBISPO
CALIFORNIA 93401
P 805.541.4509
F 805.546-0525
RLA 2248 CLARB #907

Drawn by: SEW

Checked by: MLC

Revisions

No.	Date	Description
1	08/27/2025	BID ALTERNATE

All dimensions must be checked at the job by the contractor who accepts full responsibility for their accuracy under the contract. These plans & the specifications in connection therewith have been prepared for a specific site. Any and all responsibility for their use in whole or in part on any other site is hereby disclaimed by Flewelling & Moody.

CITY OF RIDGECREST

SGT. JOHN PINNEY MEMORIAL POOL REPLACEMENT

205 S. WARNER STREET
RIDGECREST, CA 93555

Drawing Title

PLANTING PLAN ALT 6

Job No. 3055.0000

Sheet No. L2.01A6

Date 6-5-2025

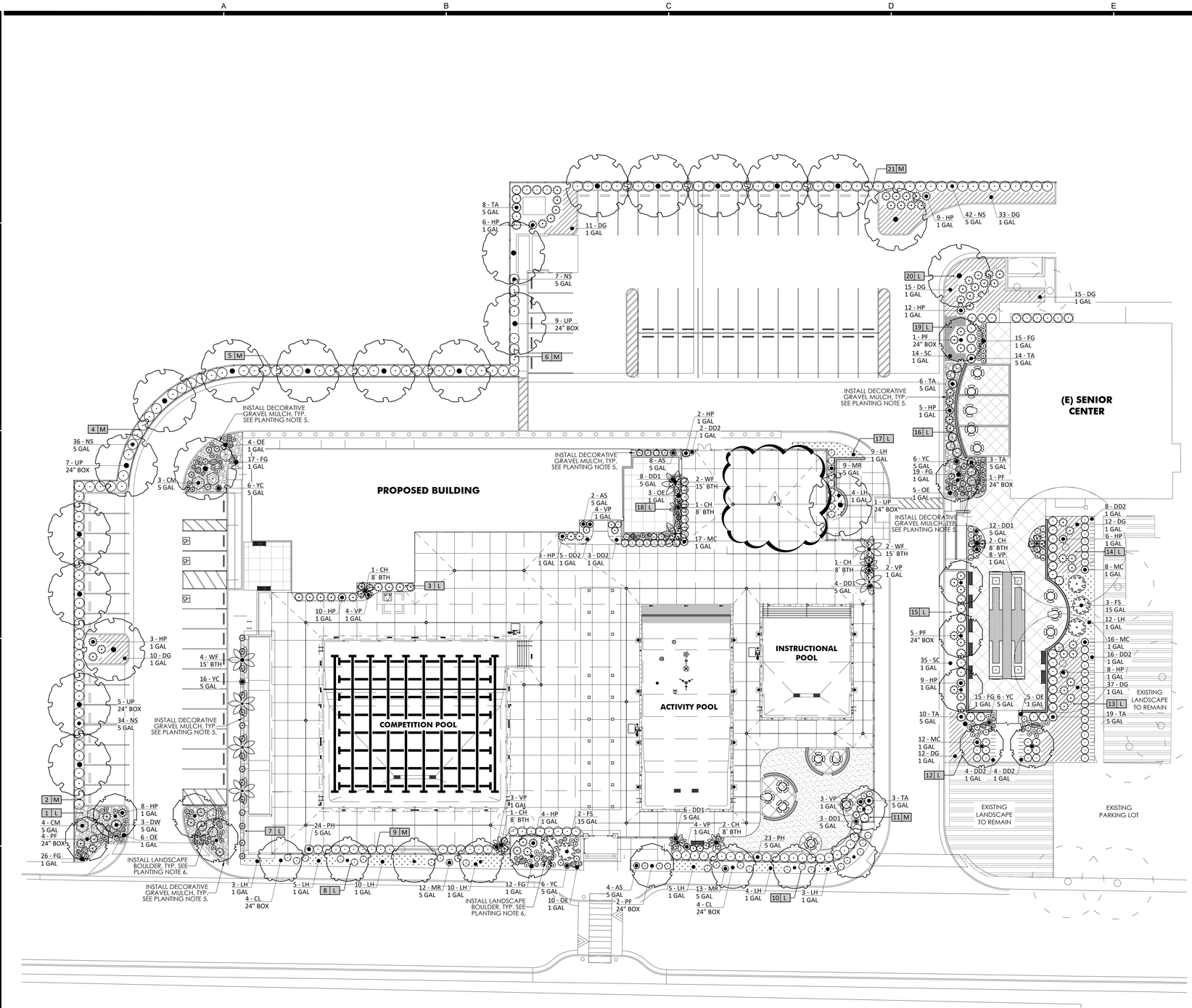

PLANT LEGEND

SYMBOL	CODE	BOTANICAL / COMMON NAME	SIZE	WUCOLS	DETAILS	QTY
TREES						
	CH	CHAMAEROPS HUMILIS MEDITERRANEAN FAN PALM	8` BTH	M	2D	8
	CL	CHILOPSIS LINEARIS DESERT WILLOW	24" BOX	M	2A, 2B, 2C	8
	PF	PARKINSONIA FLORIDA BLUE PALO VERDE	24" BOX	L	2A, 2B, 2C	13
	UP	ULMUS PARVIFOLIA LACEBARK ELM	24" BOX	M	2A, 2B, 2C	22
	WF	WASHINGTONIA FILIFERA CALIFORNIA FAN PALM	15` BTH	M	2D	8
SHRUBS						
	AS	ASCLEPIAS SUBULATA RUSH MILKWEED	5 GAL	L	1	14
	CM	CAESALPINEA MEXICANA MEXICAN BIRD OF PARADISE	5 GAL	L	1	7
	DD1	DALEA CAPITATA DALEA	5 GAL	L	1	33
	DW	DASYLIRION WHEELERI GREY DESERT SPOON	5 GAL	L	1	3
	FG	FESTUCA OVINA GLAUCA BLUE SHEEP FESCUE	1 GAL	M	1	113
	FS	FOUQUIERIA SPLENDENS OCOTILLO	15 GAL	VL	1	5
	HP	HESPERALOE PARVIFLORA RED YUCCA	1 GAL	L	1	87 / 1
	MC	MUHLENBERGIA CAPILLARIS PINK MUHLY GRASS	1 GAL	M	1	53
	MR	MUHLENBERGIA RIGENS DEER GRASS	5 GAL	M	1	33
	NS	NERIUM OLEANDER 'PETITE SALMON' PETITE SALMON OLEANDER	5 GAL	L	1	118
	OE	OENOTHERA STUBBEI BAJA EVENING PRIMROSE	1 GAL	L	1	33
	PH	PHOTINIA X FRASERI RED TIP PHOTINIA	5 GAL	M	1	47
	TA	TEUCRIUM FRUTICANS `AZUREUM` AZURE BUSH GERMANDER	5 GAL	M	1	62
	VP	VERBENA PULCHELLA ROCK VERBENA	1 GAL	L	1	28
	YC	YUCCA FILAMENTOSA `COLOR GUARD` COLOR GUARD ADAM`S NEEDLE	5 GAL	L	1	38
GROUND COVERS						
	DD2	DALEA CAPITATA DALEA	1 GAL	L	3A	42 / 1
	DG	DALEA GREGGII TRAILING INDIGO BUSH	1 GAL	L	3A	146
	LH	LANTANA X 'NEW GOLD' NEW GOLD LANTANA	1 GAL	M	3A	62
	SC	SANTOLINA CHYMAECYPARISSUS LAVENDER COTTON	1 GAL	L	3A	49
		SOD TURF - REFER TO SPECIFICATIONS FOR TYPE				
		DECORATIVE GRAVEL MULCH - SEE NOTE 5, BELOW				

LANDSCAPE CERTIFICATION

The landscape plans, in addition to the related details and specifications, adhere to all of the project's conditions of approval pertaining to landscaping, City Landscape Guidelines, and MWELO landscape ordinance.

Michael L. Cope, ASLA

PLANTING NOTES

1. QUANTITIES AND SIZES SHOWN IN THE PLANT LEGEND ARE FOR REFERENCE ONLY AND SHALL BE VERIFIED BY THE CONTRACTOR. NOTIFY PROJECT LANDSCAPE ARCHITECT OF ANY MAJOR DISCREPANCIES.
2. ALL PLANTER AREAS, AS DESIGNATED ON THE PLAN, SHALL BE PREPARED AND AMENDED PER THE SPECIFICATIONS. SOIL AMENDMENTS AND PREPARATION SHALL CONFORM TO STATE AB1881 AND LOCAL WATER EFFICIENT LANDSCAPE ORDINANCES.
3. ALL TREES PLANTED WITHIN 7' OF HARDSCAPE OR STRUCTURES SHALL BE INSTALLED WITH A DEEP ROOT PLANTER, PER DETAIL 2B/L4.01.
4. INSTALL MINIMUM 3" THICK BARK MULCH IN ALL PLANTING AREAS EXCEPT WHERE NOTED ON PLAN. REFER TO SPECIFICATIONS FOR TYPE. PROVIDE SAMPLE FOR APPROVAL.
5. INSTALL MINIMUM 2" THICK DECORATIVE GRAVEL MULCH WHERE NOTED ON PLAN. USE CALI GOLD ¾" OR APPROVED EQUAL. PROVIDE PHOTOS FOR APPROVAL.
6. INSTALL LANDSCAPE BOULDERS. PROVIDE (10) 18"D, (11) 24"D, (7) 36"D. USE DESERT BLUSH BOULDERS OR APPROVED EQUAL. PROVIDE PHOTOS FOR APPROVAL.
7. ADJUST PLANT MATERIAL AS NECESSARY AROUND UTILITY LOCATIONS. NOTIFY LANDSCAPE ARCHITECT OF ANY MAJOR CONFLICTS OR NECESSARY ADJUSTMENTS.
8. REVIEW THE PLANTING AND IRRIGATION SPECIFICATIONS PRIOR TO BIDDING. IF NOT PROVIDED, CONTACT THE LANDSCAPE ARCHITECT.
9. ALL PLANT MATERIAL SPECIFIED ARE IN COMPLIANCE WITH THE INDIAN WELLS WATER DISTRICT (RIDGECREST) APPROVED PLANT LIST.
10. CONTRACTOR TO OBTAIN AGRONOMIC SOILS ANALYSIS WITH INFILTRATION RATES, PRIOR TO CONSTRUCTION. LANDSCAPE ARCHITECT MAY ADJUST PLANTING SOIL PREP., SOIL AMENDMENTS, FERTILIZER (AMONG OTHER ITEMS), DEPENDING ON THE RESULTS OF THE ANALYSIS. REFER TO PLANTING SPEC'S SECTION 1.2B.

SCALE: 1" = 20'-0"

0' 20' 40' 60'

LANDSCAPE ARCHITECTS SEAL

AGENCY

PTN._____ - _____ APPL._____ - _____

FLEWELLING & MOODY
architecture planning interiors

HEADQUARTERS OFFICE:
815 Colorado Blvd, Suite 200
Los Angeles, CA 90041
P 323.543.8300
E-Mail: fm-pasadena@flewelling-moody.com

ANTELOPE VALLEY OFFICE:
1035 West Lancaster Boulevard
Lancaster, California 93534
P 661.949.0771
E-Mail: fm-lancaster@flewelling-moody.com

An Employee Owned Corporation

ARCHITECT

CONSULTANT

OASIS ASSOCIATES
LANDSCAPE ARCHITECTURE + PLANNING

3427 MIGUELITO COURT
SAN LUIS OBISPO
CALIFORNIA 93401
P 805.541.4509
F 805.546-0525
RLA 2248 CLARB #907

Drawn by SEW

Checked by MLC

Revisions

No.	Date	Description
1	08/27/2025	BID ALTERNATE

All dimensions must be checked at the job by the contractor who accepts full responsibility for their accuracy under the contract. These plans & the specifications in connection therewith have been prepared for a specific site. Any and all responsibility for their use in whole or in part on any other site is hereby disclaimed by Flewelling & Moody.

CITY OF RIDGECREST

SGT. JOHN PINNEY MEMORIAL POOL REPLACEMENT

205 S. WARNER STREET
RIDGECREST, CA 93555

Drawing Title

PLANTING PLAN ALT 7

Job No. 3055.0000

Date 6-5-2025

Sheet No. L2.01A7

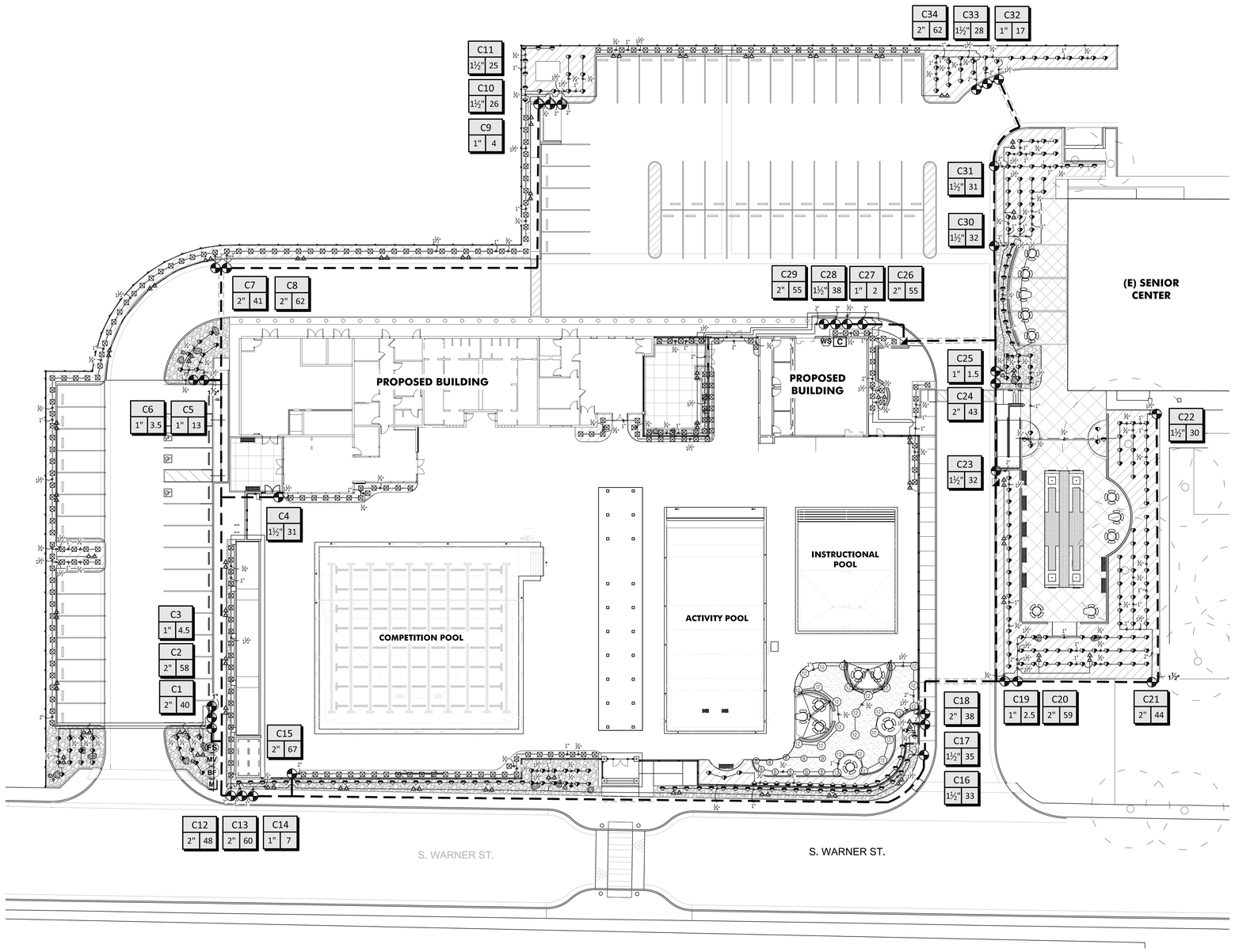

IRRIGATION LEGEND

SYMBOL	DESCRIPTION	NOTE
M	WATER METER: 2"	EXISTING TO REMAIN. WATER PURVEYOR: INDIAN WELLS VALLEY WATER DISTRICT (760) 375-5086
C / WS	CONTROLLER: RAINBIRD ESP-LXME2 (12-48 STATIONS), WITH WEATHER SENSOR: CLIMATE LOGIC® CL-100-WIRELESS IN V.I.T. SB-165SW WALL MOUNT ENCLOSURE	INSTALL PER LOCAL CODES AND MANUFACTURERS INSTRUCTIONS. REFER TO DETAIL 4 & 5, SHEET L-4.1.
BF	REDUCED PRESSURE BACKFLOW PREVENTER: FEBCO 825YA 1.5" IN INSULATED ENCLOSURE STRONG BOX SBBC-22ALI (INCLUDES PBB-22 INSULATION COVER)	INSTALL PER DETAIL 6, SHEET L-4.1.
MV / FS	MASTER VALVE: SUPERIOR 3100-150, WITH FLOW SENSOR: RAINBIRD FS100B	REFER TO DETAIL 7, SHEET L-4.1. REFER TO DETAIL 8, SHEET L-4.1. SEE NOTE 'K'.
	ELECTRIC VALVE: RAINBIRD PEB/PESB SERIES, WITH PEB-NP-HAN1 (1") [PEB-NP-HAN2 (1-1/2" & 2") (PURPLE, NON-POTABLE)	REFER TO DETAIL 9, SHEET L-4.1.
	QUICK COUPLER VALVE: RAINBIRD 44-NP (PURPLE, NON-POTABLE)	SIZE PER VALVE KEY. INSTALL PER DETAIL 10, SHEET L-4.1.
	BALL VALVE: BRASS BALL VALVE WITH UNIONS	SIZE PER MAINLINE. INSTALL PER DETAIL 11, SHEET L-4.1.
	MAINLINE: SCH. 40 PVC PIPE (PURPLE, NON-POTABLE)	2.5" SIZE UNLESS NOTED OTHERWISE. REFER TO DETAIL 12 & 13, SHEET L-4.1.
	SLEEVE: SCH. 40 PC PIPE & WIRE SLEEVE	REFER TO DETAIL 12, SHEET L-4.1.
	LATERAL LINE: SCH. 40 PVC PIPE (PURPLE, NON-POTABLE)	1" SIZE UNLESS NOTED OTHERWISE. REFER TO DETAIL 12, SHEET L-4.1.
	IRRIGATION AREA	-

IRRIGATION HEADS

SYMBOL	DESCRIPTION	PSI	RADIUS (FT.)	FLOW (GPM)	PRECIP (IN/HR)
1401	TREE BUBBLER: RAINBIRD RWS-B-C-1401-SOCK-GRATE-P INSTALL (2) PER TREE ON EITHER SIDE OF TREE AT OUTSIDE EDGE OF ROOTBALL. INSTALL PER DETAIL 14, SHEET L-4.1	30	DRIP BUBBLER	0.25	N/A
511-30 512-30 514-00	STREAM BUBBLER: TORO 500 SERIES BUBBLERS WITH STREAM BUBLER NOZZLES INSTALL PER DETAIL 15, SHEET L-4.1 SEE IRRIGATION NOTE 'N'.	10	6'-10'	~1.08-1.89	N/A
514-20	FLOOD BUBBLER: TORO 500 SERIES BUBBLERS WITH FLOOD BUBBLER NOZZLE INSTALL PER DETAIL 15, SHEET L-4.1 SEE IRRIGATION NOTE 'O'.	30	FLOOD BUBBLER	2.40	N/A
08HE-VAN 12HE-VAN	TURF SPRAY: RAINBIRD 1806-SAM-LJ POP-UP TURF SPRAY INSTALL PER DETAIL 16, SHEET L-4.1	30	8'-12'	~0.29-2.37	~1.58-2.03

VALVE CALLOUT

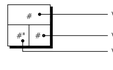

IRRIGATION NOTES

A. IRRIGATION PLANS ARE DIAGRAMMATIC! ACTUAL LINE AND HEAD PLACEMENT SHALL BE DETERMINED ON SITE DURING CONSTRUCTION. CONTRACTOR SHALL ADJUST NOZZLE RADIUS (TO ACHIEVE 100% COVERAGE) BASED ON PLAN LAYOUT & IN-FIELD DIMENSIONS.

B. POINT OF CONNECTION (P.O.C.) AT EXISTING 2" WATER METER.

C. SYSTEM DESIGN BASED ON 60 P.S.I. STATIC WATER PRESSURE. MINIMUM OPERATING PRESSURE SHALL BE 30 P.S.I. FOR TREE BUBBLERS, STREAM BUBBLERS, FLOOD BUBBLERS, AND TURF SPRAY. VERIFY WATER PRESSURE ON SITE PRIOR TO INSTALLATION.

D. LANDSCAPE CONTRACTOR SHALL BE RESPONSIBLE FOR 100% COVERAGE AT NO ADDITIONAL COST TO OWNER. SITE DIMENSIONS SHOULD BE THOROUGHLY CHECKED BY CONTRACTOR PRIOR TO BIDDING AND CONSTRUCTION. DISCREPANCIES SHOULD BE IMMEDIATELY BROUGHT TO THE ATTENTION OF THE LANDSCAPE ARCHITECT.

E. REFER TO THE SPECIFICATIONS PRIOR TO BIDDING AND CONSTRUCTION (DOCUMENTS ARE INCOMPLETE WITHOUT SPECIFICATIONS).

F. ALL LINES (MAINLINES & LATERALS) & CONTROL WIRES UNDER PAVING SHALL BE SLEEVED. CONTRACTOR SHALL INSTALL SLEEVES IN STRAIGHT LINES FROM PLANTER TO PLANTER. PLACE DESIGNATED LINE (& WIRES) INSIDE SLEEVE PRIOR TO INSTALLATION. SLEEVES SHALL BE 2x LINE SIZE.

G. PIPE SIZES SHOWN ON THE PLAN CONTINUE DOWNSTREAM, TO THE NEXT SIZE LABEL, TYPICAL.

H. INSTALL ALL VALVE BOXES & QUICK COUPLER VALVE BOXES WITHIN 12" OF CURB OR WALKWAY. NO EXCEPTIONS.

I. IRRIGATION EQUIPMENT MAY BE SHOWN OUTSIDE OF PLANTERS FOR CLARITY. INSTALL ALL EQUIPMENT IN PLANTERS UNLESS NOTED OTHERWISE.

J. INSTALL TWO (2)- 1 GPH EMITTERS PER 1 GAL. CONTAINER, 3- 1 GPH/5 GAL., 2- 2 GPH/15 GAL., AND 3- 2 GPH/24" BOX. INSTALL EMITTERS AT EQUAL DISTANCE AROUND ROOTBALL.

K. SYSTEM IS DESIGNED FOR A MINIMUM OPERATING RANGE OF 2 GPM TO A MAXIMUM OF 40 GPM PER FLOW SENSOR SPECIFICATIONS. DO NOT EXCEED THESE PARAMETERS.

L. 120v ELECTRICAL FOR AUTOMATIC CONTROLLER SHALL BE STUBBED OUT BY ELECTRICAL CONTRACTOR. FINAL HOOKUP TO NEW CLOCK SHALL BE BY LANDSCAPE CONTRACTOR.

M. IRRIGATION DESIGN COMPLIES WITH THE CRITERIA OUTLINED IN THE ORDINANCE AND APPLIES THEM ACCORDINGLY FOR THE EFFICIENT USE OF WATER IN THE IRRIGATION DESIGN PLAN.

N. STREAM BUBBLERS SHALL BE INSTALLED 6" FROM THE BACK OF WALK, WALL, OR FENCE AND SPRAY OUTWARD.

O. FLOOD BUBBLERS SHALL BE PLACE IN THE CENTER OF THE PLANTER, AS SHOWN ON PLAN.

SCALE: 1" = 20'-0"

0' 20' 40' 60'

LANDSCAPE ARCHITECTS SEAL

AGENCY

REVIEWED FOR CODE COMPLIANCE BY:
WILLDAN ENGINEERING

Approval of these plans & specifications shall not be construed to be a permit for, or an approval of any violation of any Federal, State, County or City laws or ordinances. One set of approved plans must be kept on the job until completion.

9:26:06 AM Jul 21, 2025

PTN._____ APPL._____

FLEWELLING & MOODY
architecture planning interiors

HEADQUARTERS OFFICE:
815 Colorado Blvd, Suite 200
Los Angeles, CA 90041
P 323.543.8300
E-Mail: fm-pasadena@flewelling-moody.com

ANTELOPE VALLEY OFFICE:
1035 West Lancaster Boulevard
Lancaster, California 93534
P 661.949.0771
E-Mail: fm-lancaster@flewelling-moody.com

An Employee Owned Corporation

ARCHITECT

CONSULTANT

OASIS ASSOCIATES
LANDSCAPE ARCHITECTURE + PLANNING

3427 MIGUELITO COURT
SAN LUIS OBISPO
CALIFORNIA 93401
P 805.541.4509
F 805.546-0525
RLA 2248 CLARB #907

Drawn by SEW

Checked by MLC

Revisions

No.	Date	Description

All dimensions must be checked at the job by the contractor who accepts full responsibility for their accuracy under the contract. These plans & the specifications & connection therewith have been prepared for a specific site, they are not responsible for their use in whole or in part on any other site is hereby disclaimed by Flewelling & Moody.

CITY OF RIDGECREST

SGT. JOHN PINNEY MEMORIAL POOL REPLACEMENT

205 S. WARNER STREET
RIDGECREST, CA 93555

Drawing Title

IRRIGATION PLAN

Job No. 3055-0100

Sheet No. L3.01

Date 1-20-2025

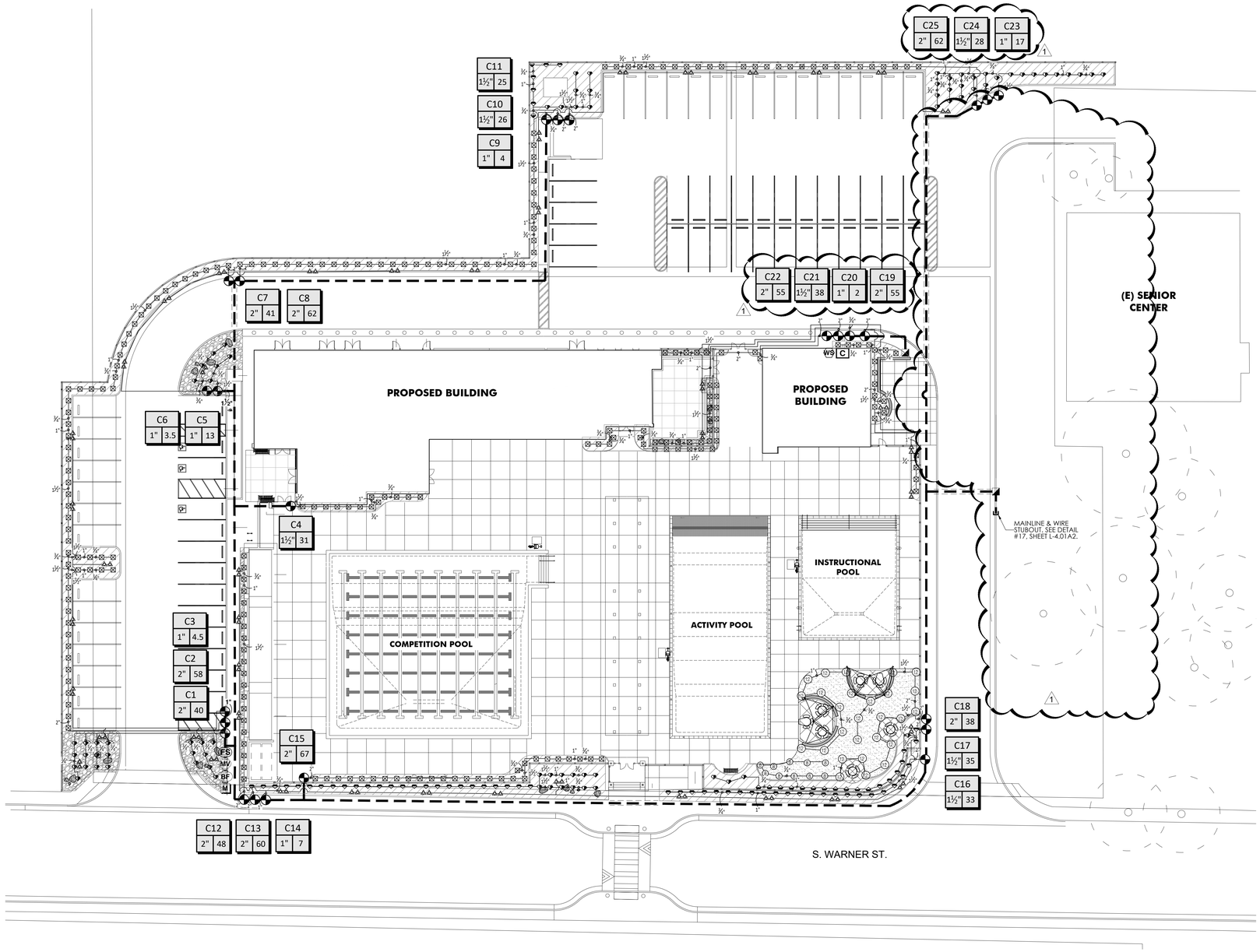

IRRIGATION LEGEND

SYMBOL	DESCRIPTION	NOTE
M	WATER METER: 2"	EXISTING TO REMAIN. WATER PURVEYOR: INDIAN WELLS VALLEY WATER DISTRICT (760) 375-5086
C / WS	CONTROLLER: RAINBIRD ESP-LXME2 (12-48 STATIONS), WITH WEATHER SENSOR: CLIMATE LOGIC CL-100-WIRELESS IN V.I.T. SB-165SW WALL MOUNT ENCLOSURE	INSTALL PER LOCAL CODES AND MANUFACTURERS INSTRUCTIONS. REFER TO DETAIL 4 & 5, SHEET L-4.1.
BF	REDUCED PRESSURE BACKFLOW PREVENTER: FEBCO 825YA 1.5" IN INSULATED ENCLOSURE STRONG BOX SBBC-22ALI (INCLUDES PBB-22 INSULATION COVER)	INSTALL PER DETAIL 6, SHEET L-4.1.
MV / FS	MASTER VALVE: SUPERIOR 3100-150, WITH FLOW SENSOR: RAINBIRD FS100B	REFER TO DETAIL 7, SHEET L-4.1. REFER TO DETAIL 8, SHEET L-4.1. SEE NOTE 'K'.
	ELECTRIC VALVE: RAINBIRD PEB/PESB SERIES, WITH PEB-NP-HAN1 (1")	PEB-NP-HAN2 (1-1/2" & 2") (PURPLE, NON-POTABLE)	REFER TO DETAIL 9, SHEET L-4.1.
	QUICK COUPLER VALVE: RAINBIRD 44-NP (PURPLE, NON-POTABLE)	SIZE PER VALVE KEY. INSTALL PER DETAIL 10, SHEET L-4.1.
	BALL VALVE: BRASS BALL VALVE WITH UNIONS	SIZE PER MAINLINE. INSTALL PER DETAIL 11, SHEET L-4.1.
	MAINLINE: SCH. 40 PVC PIPE (PURPLE, NON-POTABLE)	2.5" SIZE UNLESS NOTED OTHERWISE. REFER TO DETAIL 12 & 13, SHEET L-4.1.
	SLEEVE: SCH. 40 PC PIPE & WIRE SLEEVE	REFER TO DETAIL 12, SHEET L-4.1.
	LATERAL LINE: SCH. 40 PVC PIPE (PURPLE, NON-POTABLE)	1" SIZE UNLESS NOTED OTHERWISE. REFER TO DETAIL 12, SHEET L-4.1.
	IRRIGATION AREA	-

IRRIGATION HEADS

SYMBOL	DESCRIPTION	PSI	RADIUS (FT.)	FLOW (GPM)	PRECIP (IN/HR)
1401	TREE BUBBLER: RAINBIRD RWS-B-C-1401-SOCK-GRATE-P INSTALL (2) PER TREE ON EITHER SIDE OF TREE AT OUTSIDE EDGE OF ROOTBALL. INSTALL PER DETAIL 14, SHEET L-4.1	30	DRIP BUBBLER	0.25	N/A
511-30 512-30 514-30	STREAM BUBBLER: TORO 500 SERIES BUBBLERS WITH STREAM BUBLER NOZZLES INSTALL PER DETAIL 15, SHEET L-4.1 SEE IRRIGATION NOTE 'H'.	10	6'-10'	~1.08-1.89	N/A
514-20	FLOOD BUBBLER: TORO 500 SERIES BUBBLERS WITH FLOOD BUBBLER NOZZLE INSTALL PER DETAIL 15, SHEET L-4.1 SEE IRRIGATION NOTE 'O'.	30	FLOOD BUBBLER	2.40	N/A
08HE-VAN 12HE-VAN	TURF SPRAY: RAINBIRD 1806-SAM-U POP-UP TURF SPRAY INSTALL PER DETAIL 16, SHEET L-4.1	30	8-12'	~0.29-2.37	~1.58-2.03

VALVE CALLOUT

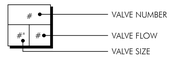

IRRIGATION NOTES

A. IRRIGATION PLANS ARE DIAGRAMMATIC! ACTUAL LINE AND HEAD PLACEMENT SHALL BE DETERMINED ON SITE DURING CONSTRUCTION. CONTRACTOR SHALL ADJUST NOZZLE RADIUS (TO ACHIEVE 100% COVERAGE) BASED ON PLAN LAYOUT & IN-FIELD DIMENSIONS.

B. POINT OF CONNECTION (P.O.C.) AT EXISTING 2" WATER METER.

C. SYSTEM DESIGN BASED ON 60 P.S.I. STATIC WATER PRESSURE. MINIMUM OPERATING PRESSURE SHALL BE 30 P.S.I. FOR TREE BUBBLERS, STREAM BUBBLERS, FLOOD BUBBLERS, AND TURF SPRAY. VERIFY WATER PRESSURE ON SITE PRIOR TO INSTALLATION.

D. LANDSCAPE CONTRACTOR SHALL BE RESPONSIBLE FOR 100% COVERAGE AT NO ADDITIONAL COST TO OWNER. SITE DIMENSIONS SHOULD BE THOROUGHLY CHECKED BY CONTRACTOR PRIOR TO BIDDING AND CONSTRUCTION. DISCREPANCIES SHOULD BE IMMEDIATELY BROUGHT TO THE ATTENTION OF THE LANDSCAPE ARCHITECT.

E. REFER TO THE SPECIFICATIONS PRIOR TO BIDDING AND CONSTRUCTION (DOCUMENTS ARE INCOMPLETE WITHOUT SPECIFICATIONS).

F. ALL LINES (MAINLINES & LATERALS) & CONTROL WIRES UNDER PAVING SHALL BE SLEEVED. CONTRACTOR SHALL INSTALL SLEEVES IN STRAIGHT LINES FROM PLANTER TO PLANTER. PLACE DESIGNATED LINE (& WIRES) INSIDE SLEEVE PRIOR TO INSTALLATION. SLEEVES SHALL BE 2x LINE SIZE.

G. PIPE SIZES SHOWN ON THE PLAN CONTINUE DOWNSTREAM, TO THE NEXT SIZE LABEL, TYPICAL.

H. INSTALL ALL VALVE BOXES & QUICK COUPLER VALVE BOXES WITHIN 12" OF CURB OR WALKWAY. NO EXCEPTIONS.

I. IRRIGATION EQUIPMENT MAY BE SHOWN OUTSIDE OF PLANTERS FOR CLARITY. INSTALL ALL EQUIPMENT IN PLANTERS UNLESS NOTED OTHERWISE.

J. INSTALL TWO (2)- 1 GPH EMITTERS PER 1 GAL CONTAINER, 3- 1 GPH/5 GAL., 2- 2 GPH/15 GAL., AND 3- 2 GPH/24" BOX. INSTALL EMITTERS AT EQUAL DISTANCE AROUND ROOTBALL.

K. SYSTEM IS DESIGNED FOR A MINIMUM OPERATING RANGE OF 2 GPM TO A MAXIMUM OF 40 GPM PER FLOW SENSOR SPECIFICATIONS. DO NOT EXCEED THESE PARAMETERS.

L. 120v ELECTRICAL FOR AUTOMATIC CONTROLLER SHALL BE STUBBED OUT BY ELECTRICAL CONTRACTOR. FINAL HOOKUP TO NEW CLOCK SHALL BE BY LANDSCAPE CONTRACTOR.

M. IRRIGATION DESIGN COMPLIES WITH THE CRITERIA OUTLINED IN THE ORDINANCE AND APPLIES THEM ACCORDINGLY FOR THE EFFICIENT USE OF WATER IN THE IRRIGATION DESIGN PLAN.

N. STREAM BUBBLERS SHALL BE INSTALLED 6" FROM THE BACK OF WALK, WALL, OR FENCE AND SPRAY OUTWARD.

O. FLOOD BUBBLERS SHALL BE PLACE IN THE CENTER OF THE PLANTER, AS SHOWN ON PLAN.

SCALE: 1" = 20'-0"

0' 20' 40' 60'

LANDSCAPE ARCHITECTS SEAL

AGENCY

PTN._____ APPL._____

FLEWELLING & MOODY
architecture planning interiors

HEADQUARTERS OFFICE:
815 Colorado Blvd, Suite 200
Los Angeles, CA 90041
P 323.543.8300
E-Mail: fm-pasadena@flewelling-moody.com

ANTELOPE VALLEY OFFICE:
1035 West Lancaster Boulevard
Lancaster, California 93534
P 661.949.0771
E-Mail: fm-lancaster@flewelling-moody.com

An Employee Owned Corporation

ARCHITECT

CONSULTANT

OASIS ASSOCIATES
LANDSCAPE ARCHITECTURE + PLANNING
3427 MIGUELITO COURT
SAN LUIS OBISPO
CALIFORNIA 93401
P 805.541.4509
F 805.546-0525
RLA 2248 CLARB #907

Drawn by SEW

Checked by MLC

Revisions

No.	Date	Description
1	08/27/2025	BID ALTERNATE

All dimensions must be checked at the job by the contractor who accepts full responsibility for their accuracy under the contract. These plans & the specifications in connection therewith have been prepared for a specific site. Any and all responsibility for their use in whole or in part on any other site is hereby disclaimed by Flewelling & Moody.

CITY OF RIDGECREST

SGT. JOHN PINNEY MEMORIAL POOL REPLACEMENT

205 S. WARNER STREET
RIDGECREST, CA 93555

Drawing Title

IRRIGATION PLAN
ALT 2

Job No. 3055.0000

Sheet No. L3.01A2

Date 6-5-2025

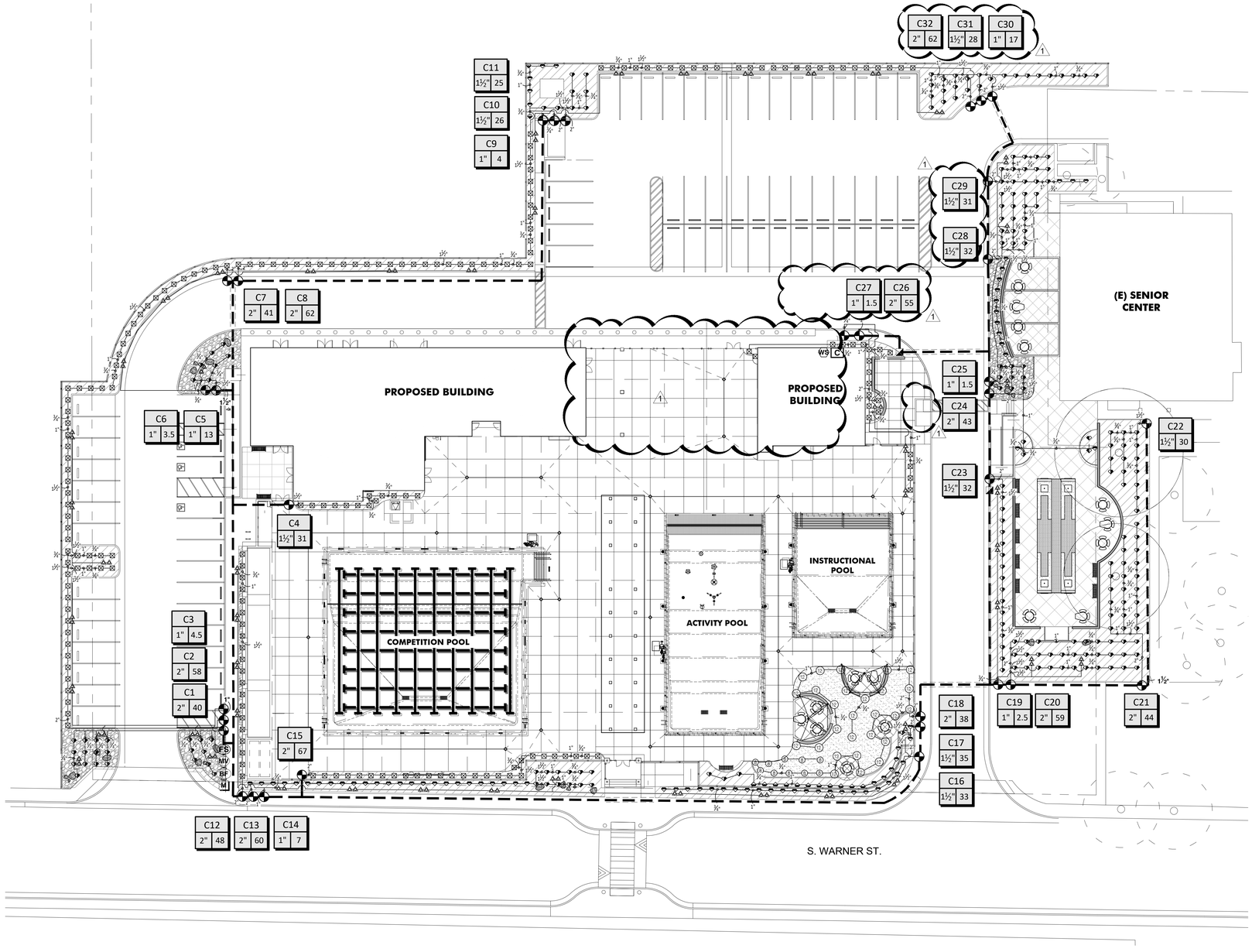

IRRIGATION LEGEND

SYMBOL	DESCRIPTION	NOTE
M	WATER METER: 2"	EXISTING TO REMAIN. WATER PURVEYOR: INDIAN WELLS VALLEY WATER DISTRICT (760) 375-5086
C / WS	CONTROLLER: RAINBIRD ESP-LXME2 (12-48 STATIONS), WITH WEATHER SENSOR: CLIMATE LOGIC CL-100-WIRELESS IN V.I.T. SB-165SW WALL MOUNT ENCLOSURE	INSTALL PER LOCAL CODES AND MANUFACTURERS INSTRUCTIONS. REFER TO DETAIL 4 & 5, SHEET L-4.1.
BF	REDUCED PRESSURE BACKFLOW PREVENTER: FEBCO 825YA 1.5" IN INSULATED ENCLOSURE STRONG BOX SBBC-22ALI (INCLUDES PBB-22 INSULATION COVER)	INSTALL PER DETAIL 6, SHEET L-4.1.
MV / FS	MASTER VALVE: SUPERIOR 3100-150, WITH FLOW SENSOR: RAINBIRD FS100B	REFER TO DETAIL 7, SHEET L-4.1. REFER TO DETAIL 8, SHEET L-4.1. SEE NOTE 'K'.
	ELECTRIC VALVE: RAINBIRD PEB/PESB SERIES, WITH PEB-NP-HAN1 (1")	PEB-NP-HAN2 (1-1/2" & 2") (PURPLE, NON-POTABLE)	REFER TO DETAIL 9, SHEET L-4.1.
	QUICK COUPLER VALVE: RAINBIRD 44-NP (PURPLE, NON-POTABLE)	SIZE PER VALVE KEY. INSTALL PER DETAIL 10, SHEET L-4.1.
	BALL VALVE: BRASS BALL VALVE WITH UNIONS	SIZE PER MAINLINE. INSTALL PER DETAIL 11, SHEET L-4.1.
	MAINLINE: SCH. 40 PVC PIPE (PURPLE, NON-POTABLE)	2.5" SIZE UNLESS NOTED OTHERWISE. REFER TO DETAIL 12 & 13, SHEET L-4.1.
	SLEEVE: SCH. 40 PC PIPE & WIRE SLEEVE	REFER TO DETAIL 12, SHEET L-4.1.
	LATERAL LINE: SCH. 40 PVC PIPE (PURPLE, NON-POTABLE)	1" SIZE UNLESS NOTED OTHERWISE. REFER TO DETAIL 12, SHEET L-4.1.
	IRRIGATION AREA	-

IRRIGATION HEADS

SYMBOL	DESCRIPTION	PSI	RADIUS (FT.)	FLOW (GPM)	PRECIP (IN/HR)
1401	TREE BUBBLER: RAINBIRD RWS-B-C-1401-SOCK-GRATE-P INSTALL (2) PER TREE ON EITHER SIDE OF TREE AT OUTSIDE EDGE OF ROOTBALL. INSTALL PER DETAIL 14, SHEET L-4.1	30	DRIP BUBBLER	0.25	N/A
511-30 512-30 514-00	STREAM BUBBLER: TORO 500 SERIES BUBBLERS WITH STREAM BUBLER NOZZLES INSTALL PER DETAIL 15, SHEET L-4.1 SEE IRRIGATION NOTE 'N'.	10	6'-10'	~1.08-1.89	N/A
514-20	FLOOD BUBBLER: TORO 500 SERIES BUBBLERS WITH FLOOD BUBBLER NOZZLE INSTALL PER DETAIL 15, SHEET L-4.1 SEE IRRIGATION NOTE 'O'.	30	FLOOD BUBBLER	2.40	N/A
08HE-VAN 12HE-VAN	TURF SPRAY: RAINBIRD 1806-SAM-U POP-UP TURF SPRAY INSTALL PER DETAIL 16, SHEET L-4.1	30	8'-12'	~0.29-2.37	~1.58-2.03

VALVE CALLOUT

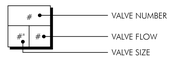

IRRIGATION NOTES

A. IRRIGATION PLANS ARE DIAGRAMMATIC! ACTUAL LINE AND HEAD PLACEMENT SHALL BE DETERMINED ON SITE DURING CONSTRUCTION. CONTRACTOR SHALL ADJUST NOZZLE RADIUS (TO ACHIEVE 100% COVERAGE) BASED ON PLAN LAYOUT & IN-FIELD DIMENSIONS.

B. POINT OF CONNECTION (P.O.C.) AT EXISTING 2" WATER METER.

C. SYSTEM DESIGN BASED ON 60 P.S.I. STATIC WATER PRESSURE. MINIMUM OPERATING PRESSURE SHALL BE 30 P.S.I. FOR TREE BUBBLERS, STREAM BUBBLERS, FLOOD BUBBLERS, AND TURF SPRAY. VERIFY WATER PRESSURE ON SITE PRIOR TO INSTALLATION.

D. LANDSCAPE CONTRACTOR SHALL BE RESPONSIBLE FOR 100% COVERAGE AT NO ADDITIONAL COST TO OWNER. SITE DIMENSIONS SHOULD BE THOROUGHLY CHECKED BY CONTRACTOR PRIOR TO BIDDING AND CONSTRUCTION. DISCREPANCIES SHOULD BE IMMEDIATELY BROUGHT TO THE ATTENTION OF THE LANDSCAPE ARCHITECT.

E. REFER TO THE SPECIFICATIONS PRIOR TO BIDDING AND CONSTRUCTION (DOCUMENTS ARE INCOMPLETE WITHOUT SPECIFICATIONS).

F. ALL LINES (MAINLINES & LATERALS) & CONTROL WIRES UNDER PAVING SHALL BE SLEEVED. CONTRACTOR SHALL INSTALL SLEEVES IN STRAIGHT LINES FROM PLANTER TO PLANTER. PLACE DESIGNATED LINE (& WIRES) INSIDE SLEEVE PRIOR TO INSTALLATION. SLEEVES SHALL BE 2x LINE SIZE.

G. PIPE SIZES SHOWN ON THE PLAN CONTINUE DOWNSTREAM, TO THE NEXT SIZE LABEL, TYPICAL.

H. INSTALL ALL VALVE BOXES & QUICK COUPLER VALVE BOXES WITHIN 12" OF CURB OR WALKWAY. NO EXCEPTIONS.

I. IRRIGATION EQUIPMENT MAY BE SHOWN OUTSIDE OF PLANTERS FOR CLARITY. INSTALL ALL EQUIPMENT IN PLANTERS UNLESS NOTED OTHERWISE.

J. INSTALL TWO (2)- 1 GPH EMITTERS PER 1 GAL. CONTAINER, 3- 1 GPH/5 GAL., 2- 2 GPH/15 GAL., AND 3- 2 GPH/24" BOX. INSTALL EMITTERS AT EQUAL DISTANCE AROUND ROOTBALL.

K. SYSTEM IS DESIGNED FOR A MINIMUM OPERATING RANGE OF 2 GPM TO A MAXIMUM OF 40 GPM PER FLOW SENSOR SPECIFICATIONS. DO NOT EXCEED THESE PARAMETERS.

L. 120v ELECTRICAL FOR AUTOMATIC CONTROLLER SHALL BE STUBBED OUT BY ELECTRICAL CONTRACTOR. FINAL HOOKUP TO NEW CLOCK SHALL BE BY LANDSCAPE CONTRACTOR.

M. IRRIGATION DESIGN COMPLIES WITH THE CRITERIA OUTLINED IN THE ORDINANCE AND APPLIES THEM ACCORDINGLY FOR THE EFFICIENT USE OF WATER IN THE IRRIGATION DESIGN PLAN.

N. STREAM BUBBLERS SHALL BE INSTALLED 6" FROM THE BACK OF WALK, WALL, OR FENCE AND SPRAY OUTWARD.

O. FLOOD BUBBLERS SHALL BE PLACE IN THE CENTER OF THE PLANTER, AS SHOWN ON PLAN.

SCALE: 1" = 20'-0"

0' 20' 40' 60'

LANDSCAPE ARCHITECTS SEAL

AGENCY

PTN._____ APPL._____

FLEWELLING & MOODY
architecture planning interiors

HEADQUARTERS OFFICE:
815 Colorado Blvd, Suite 200
Los Angeles, CA. 90041
P 323.543.8300
E-Mail: fm-pasadena@flewelling-moody.com

ANTELOPE VALLEY OFFICE:
1035 West Lancaster Boulevard
Lancaster, California 93534
P 661.949.0771
E-Mail: fm-lancaster@flewelling-moody.com

An Employee Owned Corporation

ARCHITECT

CONSULTANT

OASIS ASSOCIATES
LANDSCAPE ARCHITECTURE + PLANNING
3427 MIGUELITO COURT
SAN LUIS OBISPO
CALIFORNIA 93401
P 805.541.4509
F 805.546-0525
RLA 2248 CLARB #907

Drawn by SEW

Checked by MLC

Revisions

No.	Date	Description
1	08/27/2025	BID ALTERNATE

All dimensions must be checked at the job by the contractor who accepts full responsibility for their accuracy under the contract. These plans & the specifications in connection therewith have been prepared for a specific site. Any and all responsibility for their use in whole or in part on any other site is hereby disclaimed by Flewelling & Moody.

CITY OF RIDGECREST

SGT. JOHN PINNEY MEMORIAL POOL REPLACEMENT

205 S. WARNER STREET
RIDGECREST, CA 93555

Drawing Title

IRRIGATION PLAN
ALT 6

Job No. 3055.0000

Sheet No. L3.01A6

Date 6-5-2025

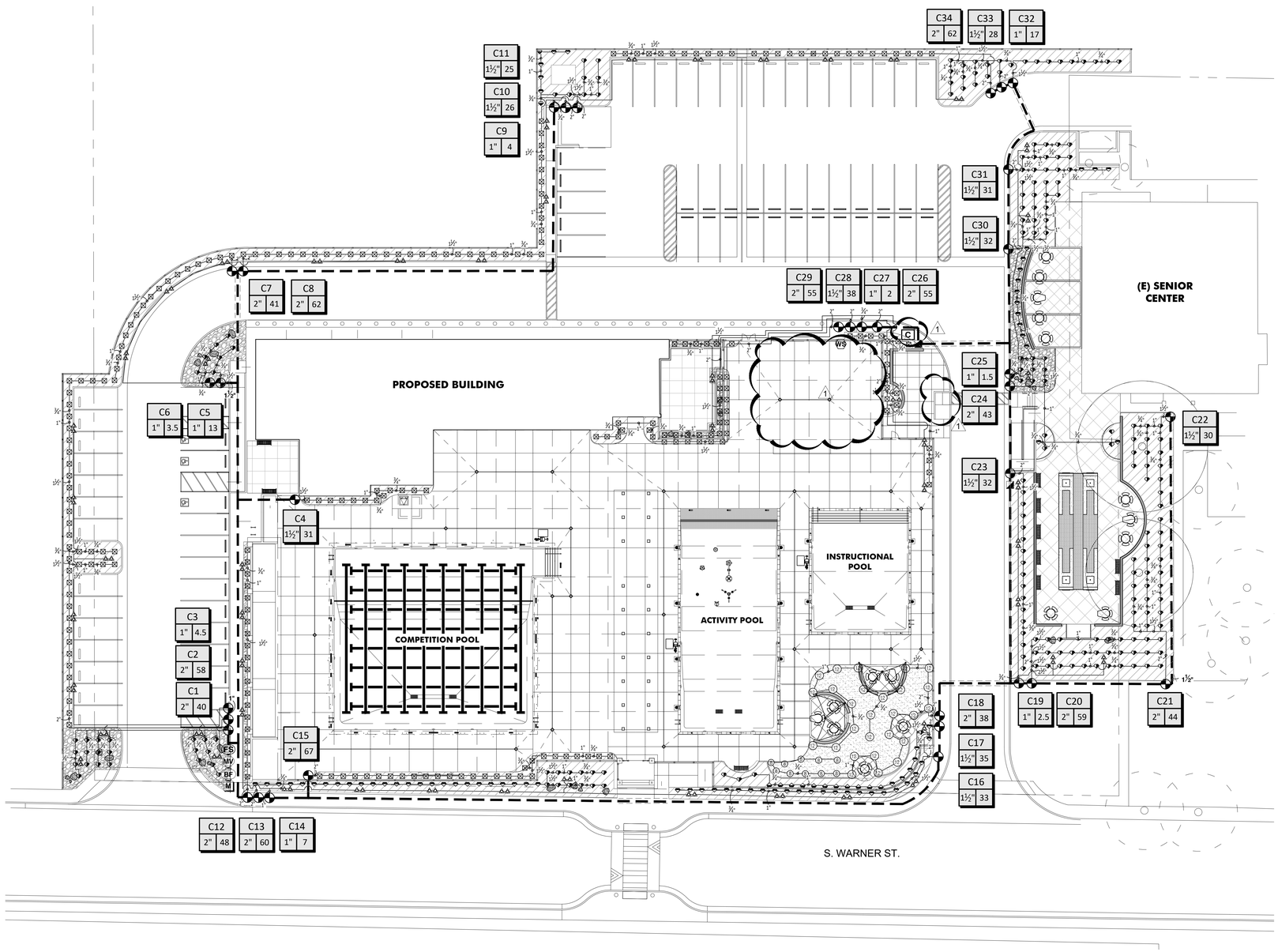

IRRIGATION LEGEND

SYMBOL	DESCRIPTION	NOTE
M	WATER METER: 2"	EXISTING TO REMAIN. WATER PURVEYOR: INDIAN WELLS VALLEY WATER DISTRICT (760) 375-5086
C / WS	CONTROLLER: RAINBIRD ESP-LXME2 (12-48 STATIONS), WITH WEATHER SENSOR (MOUNTED TO FENCE): CLIMATE LOGIC CL-100-WIRELESS IN SC-PED-SS STRONG BOX PEDESTAL MOUNT	INSTALL PER LOCAL CODES AND MANUFACTURERS INSTRUCTIONS. REFER TO DETAIL 4 & 5, SHEET L-4.1.
BF	REDUCED PRESSURE BACKFLOW PREVENTER: FEBCO 825YA 1.5" IN INSULATED ENCLOSURE STRONG BOX SBBC-22ALI (INCLUDES PBB-22 INSULATION COVER)	INSTALL PER DETAIL 6, SHEET L-4.1.
MV / FS	MASTER VALVE: SUPERIOR 3100-150, WITH FLOW SENSOR: RAINBIRD FS100B	REFER TO DETAIL 7, SHEET L-4.1. REFER TO DETAIL 8, SHEET L-4.1. SEE NOTE 'K'.
	ELECTRIC VALVE: RAINBIRD PEB/PESB SERIES, WITH PEB-NP-HAN1 (1")	PEB-NP-HAN2 (1-1/2" & 2") (PURPLE, NON-POTABLE)	REFER TO DETAIL 9, SHEET L-4.1.
	QUICK COUPLER VALVE: RAINBIRD 44-NP (PURPLE, NON-POTABLE)	SIZE PER VALVE KEY. INSTALL PER DETAIL 10, SHEET L-4.1.
	BALL VALVE: BRASS BALL VALVE WITH UNIONS	SIZE PER MAINLINE. INSTALL PER DETAIL 11, SHEET L-4.1.
	MAINLINE: SCH. 40 PVC PIPE (PURPLE, NON-POTABLE)	2.5" SIZE UNLESS NOTED OTHERWISE. REFER TO DETAIL 12 & 13, SHEET L-4.1.
	SLEEVE: SCH. 40 PC PIPE & WIRE SLEEVE	REFER TO DETAIL 12, SHEET L-4.1.
	LATERAL LINE: SCH. 40 PVC PIPE (PURPLE, NON-POTABLE)	1" SIZE UNLESS NOTED OTHERWISE. REFER TO DETAIL 12, SHEET L-4.1.
	IRRIGATION AREA	-

IRRIGATION HEADS

SYMBOL	DESCRIPTION	PSI	RADIUS (FT.)	FLOW (GPM)	PRECIP (IN/HR)
1401	TREE BUBBLER: RAINBIRD RWS-B-C-1401-SOCK-GRATE-P INSTALL (2) PER TREE ON EITHER SIDE OF TREE AT OUTSIDE EDGE OF ROOTBALL. INSTALL PER DETAIL 14, SHEET L-4.1	30	DRIP BUBBLER	0.25	N/A
511-30 512-30 514-30	STREAM BUBBLER: TORO 500 SERIES BUBBLERS WITH STREAM BUBLER NOZZLES INSTALL PER DETAIL 15, SHEET L-4.1 SEE IRRIGATION NOTE 'H'.	10	6'-10'	~1.08-1.89	N/A
514-20	FLOOD BUBBLER: TORO 500 SERIES BUBBLERS WITH FLOOD BUBBLER NOZZLE INSTALL PER DETAIL 15, SHEET L-4.1 SEE IRRIGATION NOTE 'O'.	30	FLOOD BUBBLER	2.40	N/A
08HE-VAN 12HE-VAN	TURF SPRAY: RAINBIRD 1806-SAM-U POP-UP TURF SPRAY INSTALL PER DETAIL 16, SHEET L-4.1	30	8'-12'	~0.29-2.37	~1.58-2.03

VALVE CALLOUT

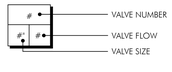

IRRIGATION NOTES

A. IRRIGATION PLANS ARE DIAGRAMMATIC! ACTUAL LINE AND HEAD PLACEMENT SHALL BE DETERMINED ON SITE DURING CONSTRUCTION. CONTRACTOR SHALL ADJUST NOZZLE RADIUS (TO ACHIEVE 100% COVERAGE) BASED ON PLAN LAYOUT & IN-FIELD DIMENSIONS.

B. POINT OF CONNECTION (P.O.C.) AT EXISTING 2" WATER METER.

C. SYSTEM DESIGN BASED ON 60 P.S.I. STATIC WATER PRESSURE. MINIMUM OPERATING PRESSURE SHALL BE 30 P.S.I. FOR TREE BUBBLERS, STREAM BUBBLERS, FLOOD BUBBLERS, AND TURF SPRAY. VERIFY WATER PRESSURE ON SITE PRIOR TO INSTALLATION.

D. LANDSCAPE CONTRACTOR SHALL BE RESPONSIBLE FOR 100% COVERAGE AT NO ADDITIONAL COST TO OWNER. SITE DIMENSIONS SHOULD BE THOROUGHLY CHECKED BY CONTRACTOR PRIOR TO BIDDING AND CONSTRUCTION. DISCREPANCIES SHOULD BE IMMEDIATELY BROUGHT TO THE ATTENTION OF THE LANDSCAPE ARCHITECT.

E. REFER TO THE SPECIFICATIONS PRIOR TO BIDDING AND CONSTRUCTION (DOCUMENTS ARE INCOMPLETE WITHOUT SPECIFICATIONS).

F. ALL LINES (MAINLINES & LATERALS) & CONTROL WIRES UNDER PAVING SHALL BE SLEEVED. CONTRACTOR SHALL INSTALL SLEEVES IN STRAIGHT LINES FROM PLANTER TO PLANTER. PLACE DESIGNATED LINE (& WIRES) INSIDE SLEEVE PRIOR TO INSTALLATION. SLEEVES SHALL BE 2x LINE SIZE.

G. PIPE SIZES SHOWN ON THE PLAN CONTINUE DOWNSTREAM, TO THE NEXT SIZE LABEL, TYPICAL.

H. INSTALL ALL VALVE BOXES & QUICK COUPLER VALVE BOXES WITHIN 12" OF CURB OR WALKWAY. NO EXCEPTIONS.

I. IRRIGATION EQUIPMENT MAY BE SHOWN OUTSIDE OF PLANTERS FOR CLARITY. INSTALL ALL EQUIPMENT IN PLANTERS UNLESS NOTED OTHERWISE.

J. INSTALL TWO (2)- 1 GPH EMITTERS PER 1 GAL CONTAINER, 3- 1 GPH/5 GAL., 2- 2 GPH/15 GAL., AND 3- 2 GPH/24" BOX. INSTALL EMITTERS AT EQUAL DISTANCE AROUND ROOTBALL.

K. SYSTEM IS DESIGNED FOR A MINIMUM OPERATING RANGE OF 2 GPM TO A MAXIMUM OF 40 GPM PER FLOW SENSOR SPECIFICATIONS. DO NOT EXCEED THESE PARAMETERS.

L. 120v ELECTRICAL FOR AUTOMATIC CONTROLLER SHALL BE STUBBED OUT BY ELECTRICAL CONTRACTOR. FINAL HOOKUP TO NEW CLOCK SHALL BE BY LANDSCAPE CONTRACTOR.

M. IRRIGATION DESIGN COMPLIES WITH THE CRITERIA OUTLINED IN THE ORDINANCE AND APPLIES THEM ACCORDINGLY FOR THE EFFICIENT USE OF WATER IN THE IRRIGATION DESIGN PLAN.

N. STREAM BUBBLERS SHALL BE INSTALLED 6" FROM THE BACK OF WALK, WALL, OR FENCE AND SPRAY OUTWARD.

O. FLOOD BUBBLERS SHALL BE PLACE IN THE CENTER OF THE PLANTER, AS SHOWN ON PLAN.

SCALE: 1" = 20'-0"

0' 20' 40' 60'

LANDSCAPE ARCHITECTS SEAL

AGENCY

PTN._____ APPL._____

FLEWELLING & MOODY
architecture planning interiors

HEADQUARTERS OFFICE:
815 Colorado Blvd, Suite 200
Los Angeles, CA. 90041
P 323.543.8300
E-Mail: fm-pasadena@flewelling-moody.com

ANTELOPE VALLEY OFFICE:
1035 West Lancaster Boulevard
Lancaster, California 93534
P 661.949.0771
E-Mail: fm-lancaster@flewelling-moody.com

An Employee Owned Corporation

ARCHITECT

CONSULTANT

OASIS ASSOCIATES
LANDSCAPE ARCHITECTURE + PLANNING

3427 MIGUELITO COURT
SAN LUIS OBISPO
CALIFORNIA 93401
P 805.541.4509
F 805.546-0525
RLA 2248 CLARB #907

Drawn by SEW

Checked by MLC

Revisions

No.	Date	Description
1	08/27/2025	BID ALTERNATE

All dimensions must be checked at the job by the contractor who accepts full responsibility for their accuracy under the contract. These plans & the specifications in connection therewith have been prepared for a specific site. Any and all responsibility for their use in whole or in part on any other site is hereby disclaimed by Flewelling & Moody.

CITY OF RIDGECREST

SGT. JOHN PINNEY MEMORIAL POOL REPLACEMENT

205 S. WARNER STREET
RIDGECREST, CA 93555

Drawing Title

IRRIGATION PLAN
ALT 7

Job No. 3055.0000

Sheet No. L3.01A7

Date 6-5-2025

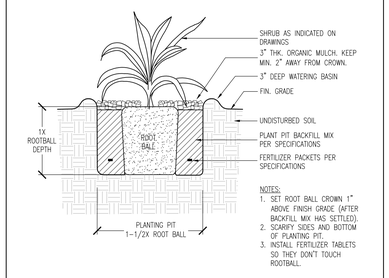

NOTES:
1. SET ROOT BALL CROWN 1" ABOVE FINISH GRADE (AFTER BACKFILL MIX HAS SETTLED).
2. SCARIFY SIDES AND BOTTOM OF PLANTING PIT.
3. INSTALL FERTILIZER TABLETS SO THEY DON'T TOUCH ROOTBALL.

1 TYPICAL SHRUB PLANTING — NOT TO SCALE

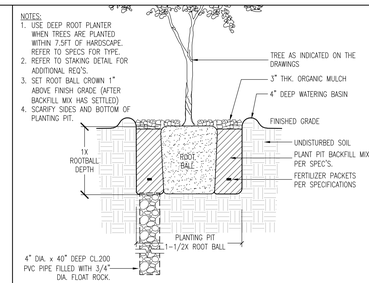

2A TYPICAL TREE PLANTING — NOT TO SCALE

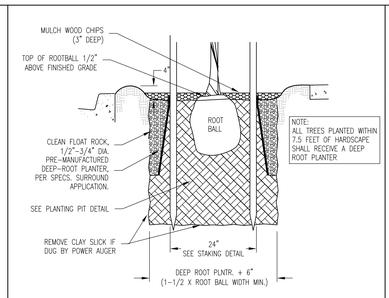

2B DEEP ROOT PLANTER — NOT TO SCALE

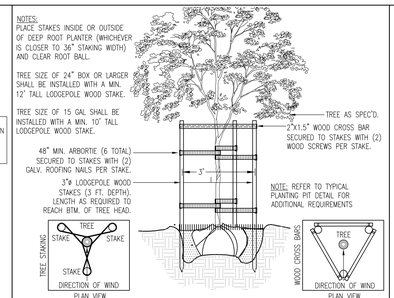

2C TYPICAL TREE STAKING — NOT TO SCALE

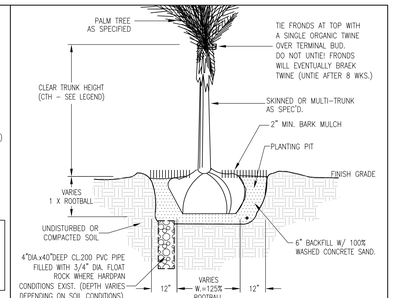

2D PALM TREE INSTALLATION

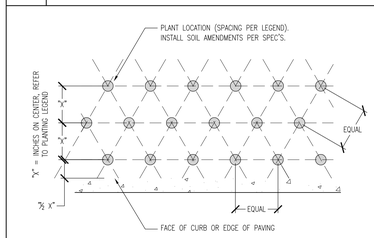

NOTE:
ALL GROUND COVERS ARE TO BE PLANTED AT EQUAL TRIANGULAR SPACING UNLESS OTHERWISE NOTED ON PLAN.

3A GROUNDCOVER LAYOUT — NOT TO SCALE

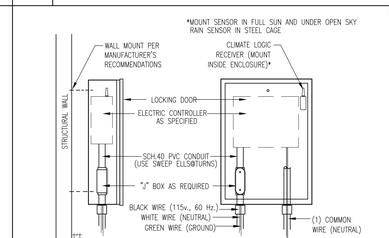

4 CONTROLLER WITH ENCLOSURE & SENSOR — NOT TO SCALE

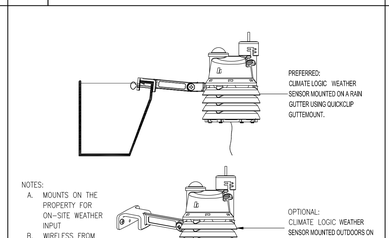

5 WEATHER SENSOR - MOUNT OPTS. — NOT TO SCALE

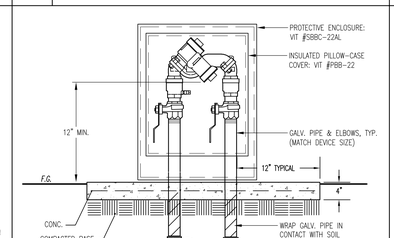

6 BACKFLOW PREVENTER W/ INSULATED ENCLOSURE — NOT TO SCALE

7 MASTER VALVE — NOT TO SCALE

8 FLOW SENSOR — NOT TO SCALE

9 AUTOMATIC VALVE — NOT TO SCALE

10 BRASS BALL VALVE — NOT TO SCALE

11 QUICK COUPLER VALVE — NOT TO SCALE

NOTES: BACKFILL UNDER ALL ASPHALT & CONC. PAVING COMPACTED TO 95%.
BACKFILL AT ALL PLANTING AREAS COMPACTED TO 85% (SLOPES 90%). BACKFILL UNDER PAVING REQUIRES SAND (SEE SPEC'S.)
TRENCHES SHALL BE WIDE ENOUGH TO ALLOW 4" MIN. HORIZ. CLEARANCE BETWEEN PIPES.
ALL CONTROL WIRES UNDER PAVING SHALL BE SLEEVED.
CONTROL WIRE BUNDLES SHALL BE TAPED EVERY 10 FT. O.C.
MAINLINE EQUAL TO & GREATER THAN 1-1/2" DIA. SHALL HAVE THRUST BLOCKS AT ALL CORNERS, TEES, & CAPS.
ALL LINES UNDER PAVING SHALL BE SLEEVED.

12 TYPICAL IRRIGATION PIPE TRENCHING — NOT TO SCALE

NOTES:
1. SUPPLY LINES 1-1/2" IN DIAMETER AND LARGER SHALL RECEIVE CONCRETE THRUST BLOCKS.
2. USE 1/2 C.F. OF CONCRETE PER DIA. INCH OF PIPE (e.g. 2" PIPE = 1 C.F. CONC.)

13 THRUST BLOCKS — NOT TO SCALE

14 TREE BUBBLER — NOT TO SCALE

15 SHRUB BUBBLER — NOT TO SCALE

NOTE: ADJUST NOZZLE RADIUS FOR MAXIMUM COVERAGE WITHOUT OVERSPRAY ONTO WALKS/BUILDINGS.

16 POP-UP SPRINKLER HEAD — NOT TO SCALE

AGENCY

REVIEWED FOR CODE COMPLIANCE BY: WILLDAN ENGINEERING

Approval of these plans & specifications shall not be construed to be a permit for, or an approval of any violation of any Federal, State, County or City laws or ordinances. One set of approved plans must be kept on the job until completion.

9:26:08 AM Jul 21, 2025

PTN._____ APPL._____

FLEWELLING & MOODY
architecture planning interiors

HEADQUARTERS OFFICE:
815 Colorado Blvd, Suite 200
Los Angeles, CA 90041
P 323.543.8300
E-Mail: fm-pasadena@flewelling-moody.com

ANTELOPE VALLEY OFFICE:
1035 West Lancaster Boulevard
Lancaster, California 93534
P 661.949.0771
E-Mail: fm-lancaster@flewelling-moody.com

An Employee Owned Corporation

ARCHITECT

CONSULTANT

OASIS ASSOCIATES
LANDSCAPE ARCHITECTURE • PLANNING

3427 MIGUELITO COURT
SAN LUIS OBISPO
CALIFORNIA 93401
P 805.541.4509
F 805.546-0525
RLA 2248 CLARB #907

Drawn by: SEW
Checked by: MLC

Revisions

No.	Date	Description

All dimensions must be checked at the job by the contractor who accepts full responsibility for their accuracy under the contract. These plans & the specifications in connection therewith have been prepared for a specific site. Any and all responsibility for their use in whole or in part on any other site is hereby disclaimed by Flewelling & Moody.

CITY OF RIDGECREST

SGT. JOHN PINNEY MEMORIAL POOL REPLACEMENT

205 S. WARNER STREET
RIDGECREST, CA 93555

Drawing Title

LANDSCAPE DETAILS

Job No. 3055-0100

Sheet No. L4.01

Date 1-20-2025

REGISTERED LANDSCAPE ARCHITECT — 11/30/25 — 1/20/35 — STATE OF CALIFORNIA

LANDSCAPE ARCHITECTS SEAL

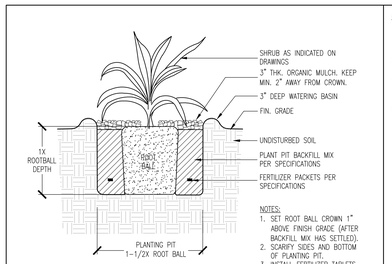

NOTES:
1. SET ROOT BALL CROWN 1" ABOVE FINISH GRADE (AFTER BACKFILL MIX HAS SETTLED).
2. SCARIFY SIDES AND BOTTOM OF PLANTING PIT.
3. INSTALL FERTILIZER TABLETS SO THEY DON'T TOUCH ROOTBALL.

1 TYPICAL SHRUB PLANTING — NOT TO SCALE

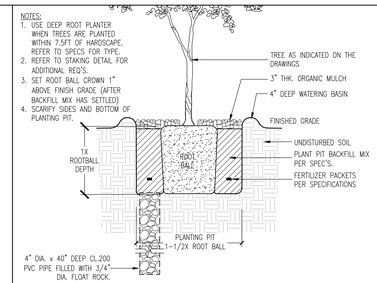

2A TYPICAL TREE PLANTING — NOT TO SCALE

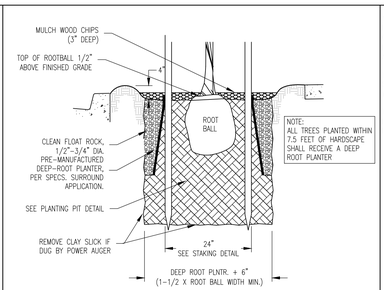

2B DEEP ROOT PLANTER — NOT TO SCALE

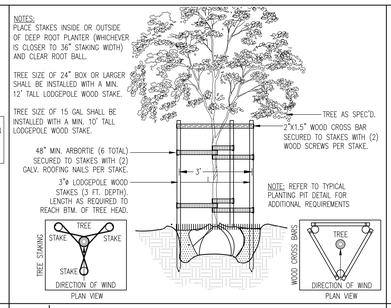

2C TYPICAL TREE STAKING — NOT TO SCALE

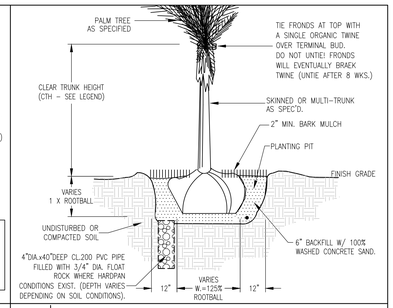

2D PALM TREE INSTALLATION

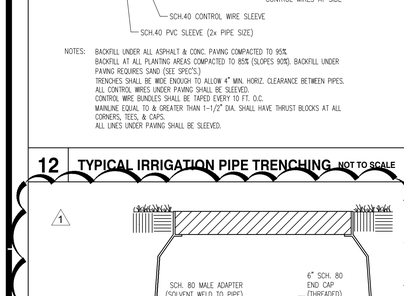

NOTE:
ALL GROUND COVERS ARE TO BE PLANTED AT EQUAL TRIANGULAR SPACING UNLESS OTHERWISE NOTED ON PLAN.

3A GROUNDCOVER LAYOUT — NOT TO SCALE

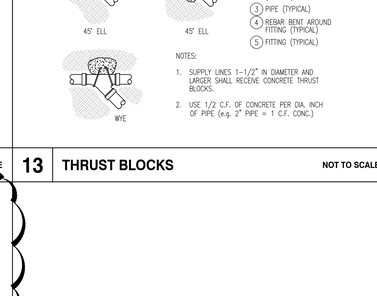

4 CONTROLLER WITH ENCLOSURE & SENSOR

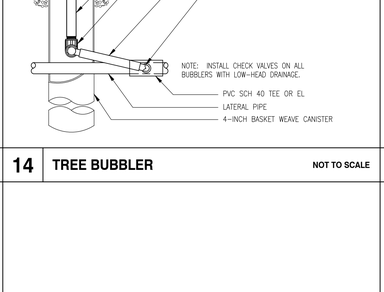

NOTES:
A. MOUNTS ON THE PROPERTY FOR ON-SITE WEATHER INPUT
B. WIRELESS FROM SENSOR TO RECEIVER (RF TRANSMISSION)
C. UP TO 1000' LINE OF SIGHT (LOS) RANGE.

5 WEATHER SENSOR - MOUNT OPTS. — NOT TO SCALE

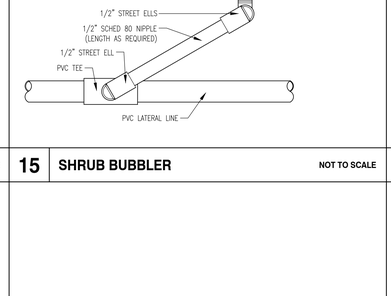

NOTES
INSTALL DEVICE WITH 4" THK. CONCRETE PAD (REINFORCED w/#3 BAR 24" O.C.) UNDERNEATH.

6 BACKFLOW PREVENTER W/ INSULATED ENCLOSURE — NOT TO SCALE

7 MASTER VALVE — NOT TO SCALE

8 FLOW SENSOR — NOT TO SCALE

9 AUTOMATIC VALVE — NOT TO SCALE

10 BRASS BALL VALVE — NOT TO SCALE

11 QUICK COUPLER VALVE — NOT TO SCALE

NOTES: BACKFILL UNDER ALL ASPHALT & CONC. PAVING COMPACTED TO 95%.
BACKFILL AT ALL PLANTING AREAS COMPACTED TO 85% (SLOPES 90%). BACKFILL UNDER PAVING REQUIRES SAND (SEE SPEC'S.)
TRENCHES SHALL BE WIDE ENOUGH TO ALLOW 4" MIN. HORIZ. CLEARANCE BETWEEN PIPES.
ALL CONTROL WIRES UNDER PAVING SHALL BE SLEEVED.
CONTROL WIRE BUNDLES SHALL BE TAPED EVERY 10 FT. O.C.
MAINLINE EQUAL TO & GREATER THAN 1-1/2" DIA. SHALL HAVE THRUST BLOCKS AT ALL CORNERS, TEES, & CAPS.
ALL LINES UNDER PAVING SHALL BE SLEEVED.

12 TYPICAL IRRIGATION PIPE TRENCHING — NOT TO SCALE

NOTES:
1. SUPPLY LINES 1-1/2" IN DIAMETER AND LARGER SHALL RECEIVE CONCRETE THRUST BLOCKS.
2. USE 1/2 C.F. OF CONCRETE PER DIA. INCH OF PIPE (e.g. 2" PIPE = 1 C.F. CONC.)

13 THRUST BLOCKS — NOT TO SCALE

14 TREE BUBBLER — NOT TO SCALE

15 SHRUB BUBBLER — NOT TO SCALE

NOTE: ADJUST NOZZLE RADIUS FOR MAXIMUM COVERAGE WITHOUT OVERSPRAY ONTO WALKS/BUILDINGS.

16 POP-UP SPRINKLER HEAD — NOT TO SCALE

17 MAINLINE & WIRE STUBOUT

AGENCY

PTN._____ - _____ APPL._____ - _____

FLEWELLING & MOODY
architecture planning interiors

HEADQUARTERS OFFICE:
815 Colorado Blvd, Suite 200
Los Angeles, CA 90041
P 323.543.8300
E-Mail: fm-pasadena@flewelling-moody.com

ANTELOPE VALLEY OFFICE:
1035 West Lancaster Boulevard
Lancaster, California 93534
P 661.949.0771
E-Mail: fm-lancaster@flewelling-moody.com

An Employee Owned Corporation

ARCHITECT

CONSULTANT

OASIS ASSOCIATES
LANDSCAPE ARCHITECTURE • PLANNING

3427 MIGUELITO COURT
SAN LUIS OBISPO
CALIFORNIA 93401
P 805.541.4509
F 805.546-0525
RLA 2248 CLARB #907

Drawn by: SEW
Checked by: MLC

Revisions

No.	Date	Description
1	08/27/2025	BID ALTERNATE

All dimensions must be checked at the job by the contractor who accepts full responsibility for their accuracy under the contract. These plans & the specifications in connection therewith have been prepared for a specific site. Any and all responsibility for their use in whole or in part on any other site is hereby disclaimed by Flewelling & Moody.

CITY OF RIDGECREST

SGT. JOHN PINNEY MEMORIAL POOL REPLACEMENT

205 S. WARNER STREET
RIDGECREST, CA 93555

Drawing Title

LANDSCAPE DETAILS
ALT 2

Job No. 3055.0000

Sheet No. L4.01A2

Date 6-5-2025

LANDSCAPE ARCHITECTS SEAL
REGISTERED LANDSCAPE ARCHITECT
11/30/25
STATE OF CALIFORNIA

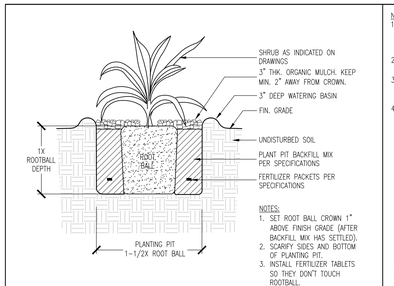

1 TYPICAL SHRUB PLANTING — NOT TO SCALE

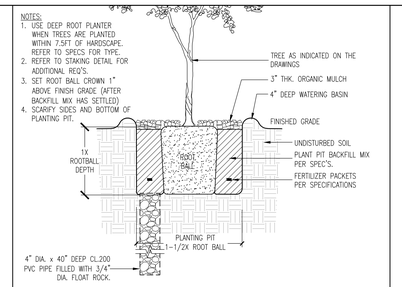

2A TYPICAL TREE PLANTING — NOT TO SCALE

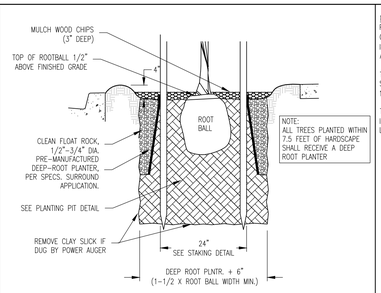

2B DEEP ROOT PLANTER — NOT TO SCALE

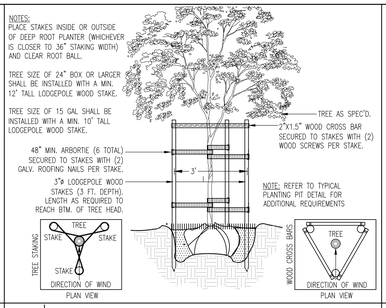

2C TYPICAL TREE STAKING — NOT TO SCALE

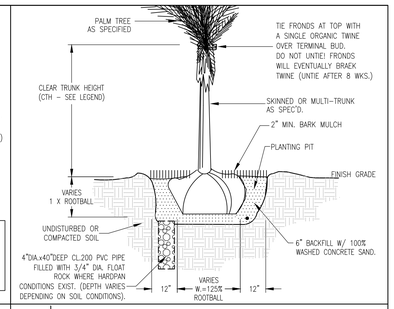

2D PALM TREE INSTALLATION

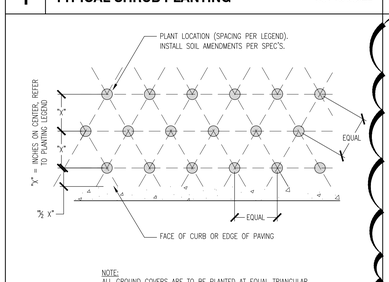

3A GROUNDCOVER LAYOUT — NOT TO SCALE

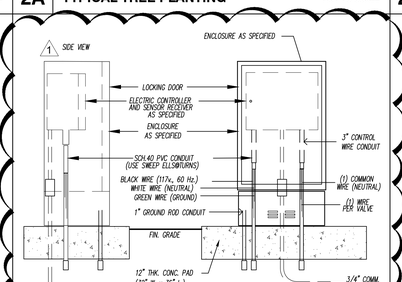

4 CONTROLLER (PEDESTAL MOUNT)

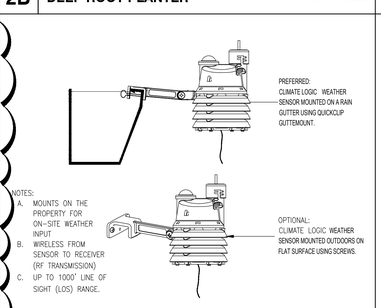

5 WEATHER SENSOR - MOUNT OPTS. — NOT TO SCALE

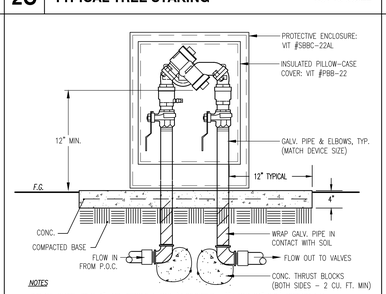

6 BACKFLOW PREVENTER W/ INSULATED ENCLOSURE — NOT TO SCALE

7 MASTER VALVE — NOT TO SCALE

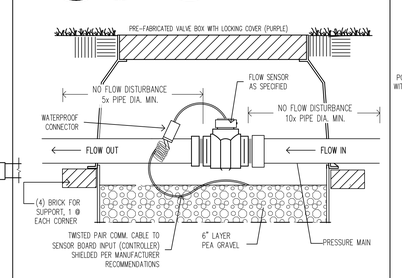

8 FLOW SENSOR — NOT TO SCALE

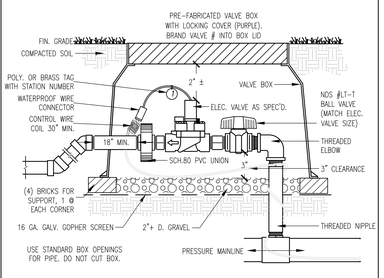

9 AUTOMATIC VALVE — NOT TO SCALE

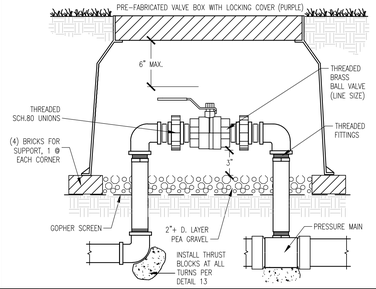

10 BRASS BALL VALVE — NOT TO SCALE

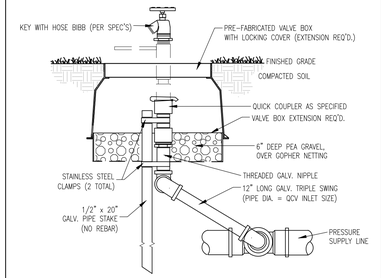

11 QUICK COUPLER VALVE — NOT TO SCALE

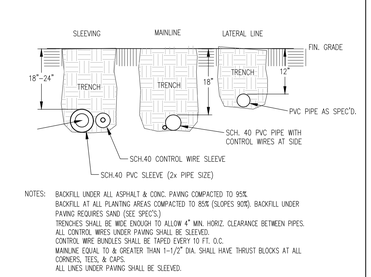

12 TYPICAL IRRIGATION PIPE TRENCHING — NOT TO SCALE

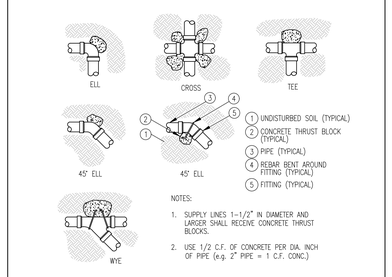

13 THRUST BLOCKS — NOT TO SCALE

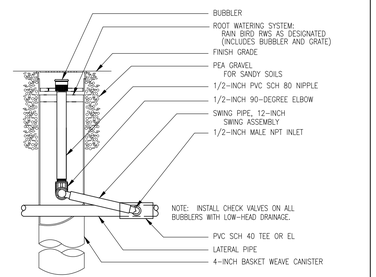

14 TREE BUBBLER — NOT TO SCALE

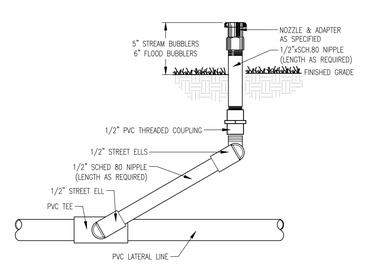

15 SHRUB BUBBLER — NOT TO SCALE

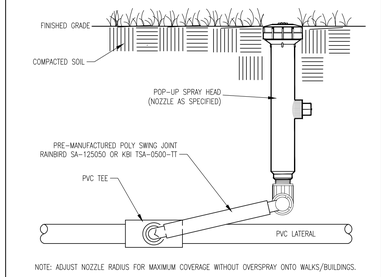

16 POP-UP SPRINKLER HEAD — NOT TO SCALE

AGENCY

PTN._____ - _____ APPL._____ - _____

FLEWELLING & MOODY
architecture planning interiors

HEADQUARTERS OFFICE:
815 Colorado Blvd, Suite 200
Los Angeles, CA 90041
P 323.543.8300
E-Mail: fm-pasadena@flewelling-moody.com

ANTELOPE VALLEY OFFICE:
1035 West Lancaster Boulevard
Lancaster, California 93534
P 661.949.0771
E-Mail: fm-lancaster@flewelling-moody.com

An Employee Owned Corporation

ARCHITECT

CONSULTANT

OASIS ASSOCIATES
LANDSCAPE ARCHITECTURE • PLANNING

3427 MIGUELITO COURT
SAN LUIS OBISPO
CALIFORNIA 93401
P 805.541.4509
F 805.546-0525
RLA 2248 CLARB #907

Drawn by	SEW
Checked by	MLC

Revisions

No.	Date	Description
1	08/27/2025	BID ALTERNATE

All dimensions must be checked at the job by the contractor who accepts full responsibility for their accuracy under the contract. These plans & the specifications in connection therewith have been prepared for a specific site. Any and all responsibility for their use in whole or in part on any other site is hereby disclaimed by Flewelling & Moody.

CITY OF RIDGECREST

SGT. JOHN PINNEY MEMORIAL POOL REPLACEMENT

205 S. WARNER STREET
RIDGECREST, CA 93555

Drawing Title

LANDSCAPE DETAILS
ALT 7

Job No.	Sheet No.
3055.0000	L4.01A7
Date	
6-5-2025	

LANDSCAPE ARCHITECTS SEAL
11/30/25
6/5/25

Maximum Applied Water Allowance Calculations for New and Rehabilitated Non-Residential Landscapes

Enter value in Pale Blue Cells

Tan Cells Show Results

Messages and Warnings

Click on the blue cell on right to Pick City Name	Lancaster	Name of City
ET_o of City from Appendix A	71.10	ET_o (inches/year)
	15856	Overhead Landscape Area (ft^2)
	0	Drip Landscape Area (ft^2)
	1540	SLA (ft^2)
Total Landscape Area	17,396	
Results:		
$(ET_o) \times (0.62) \times [(0.45 \times LA) + (1.0 - 0.45) \times SLA)]$	-	Gallons
	-	Cubic Feet
	-	HCF
	-	Acre-feet
	-	Millions of Gallons
MAWA calculation incorporating Effective Precipitation (Optional)		
Precipitation (Optional)		
ET_o of City from Appendix A	71	ET_o (inches/year)
Total Landscape Area	17,396	LA (ft^2)
Special Landscape Area	1,540	SLA (ft^2)
	17	Total annual precipitation (inches/year)
Enter Effective Precipitation	4.25	Eppt (in/yr)(25% of total annual precipitation)
Results:		
$MAWA = [(ET_o - Eppt) \times (0.62)] \times [(0.45 \times LA) + ((1.0 - 0.45) \times SLA)]$	359,561	Gallons
	48,066.48	Cubic Feet
	480.66	HCF
	1.10	Acre-feet
	0.36	Millions of Gallons

Estimated Total Water Use

Equation: ETWU = $ET_o \times 0.62 \times [((PF \times HA)/IE) + SLA]$; Considering precipitation ETWA = $(ETo-Eppt) \times 0.62 \times [((PF \times HA)/IE) + SLA]$

Enter values in Pale Blue Cells

Tan Cells Show Results

Messages and Warnings

Irrigation Efficiency Default Value for overhead 0.75 and drip 0.81.

Plant Water Use Type	Plant Factor
Very Low	0 - 0.1
Low	0.2 - 0.3
Medium	0.4 - 0.6
High	0.7 - 1.0
SLA	1.0

Hydrozone	Select System From the Dropdown List click on cell below	Plant Water Use Type (s) (low, medium, high)	Plant Factor (PF)	Hydrozone Area (HA) (ft^2) Without SLA	Enter Irrigation Efficiency (IE)	(PF x HA (ft^2))/IE
Zone 1	Overhead Spray	Low	0.20	831	0.75	222
Zone 2	Overhead Spray	Medium	0.45	1,069	0.75	641
Zone 3	Drip	Low	0.20	-	0.81	0
Zone 4	Overhead Spray	Low	0.20	639	0.75	170
Zone 5	Overhead Spray	Low	0.20	431	0.75	115
Zone 6	Drip	Low	0.20	-	0.81	0
Zone 7	Overhead Spray	Low	0.20	402		
Zone 8	Overhead Spray	Low	0.20	612	0.75	163
Zone 9	Drip	Low	0.20	-	0.81	0
Zone 10	Overhead Spray	Low	0.20	224	0.75	60
Zone 11	Overhead Spray	Low	0.20	614	0.75	164
Zone 12	Overhead Spray	Low	0.20	340	0.75	91
Zone 13	Overhead Spray	Low	0.20	1,158	0.75	309
Zone 14	Drip	Low	0.20	-	0.81	0
Zone 15	Overhead Spray	Low	0.20	479	0.75	128
Zone 16	Overhead Spray	Low	0.20	584	0.75	156
Zone 17	Overhead Spray	Low	0.20	651	0.75	174
Zone 18						
Zone 19	Drip	Low	0.20	-	0.81	0
Zone 20	Overhead Spray	Low	0.20	1,210	0.75	323
Zone 21	Overhead Spray	Low	0.20	946	0.75	252
Zone 22	Overhead Spray	Low	0.20	730	0.75	195
Zone 23	Overhead Spray	Low	0.20	817	0.75	218
Zone 24	Overhead Spray	Low	0.20	530	0.75	141
Zone 25	Drip	Low	0.20	-	0.81	0
Zone 26	Overhead Spray	Low	0.20	422	0.75	113
Zone 27	Drip	Low	0.20	-	0.81	0
Zone 28	Overhead Spray	Low	0.20	194	0.75	52
Zone 29	Overhead Spray	Low	0.20	320	0.75	85
Zone 30	Overhead Spray	Low	0.20	538	0.75	143
Zone 31	Overhead Spray	Low	0.20	934	0.75	249
Zone 32	Overhead Spray	Low	0.20	164	0.75	44
Zone 33	Overhead Spray	Low	0.20	589	0.75	157
Zone 34	Overhead Spray	Low	0.20	428	0.75	114
						4,477
		SLA		1,540		1,540
			Sum	17,396		

Results

MAWA = 359,561

ETWU = 249,403 Gallons
33,340 Cubic Feet
333.40 HCF
0.77 Acre-feet
0.25 Millions of Gallons

ETWU complies with MAWA

16 MAWA / ETWU CALCULATIONS

AGENCY

REVIEWED FOR CODE COMPLIANCE BY:
WILLDAN ENGINEERING

Approval of these plans & specifications shall not be construed to be a permit for, or an approval of any violation of any Federal, State, County or City laws or ordinances. One set of approved plans must be kept on the job until completion.

9:26:09 AM Jul 21, 2025

PTN._____ - _____ APPL._____ - _____

FLEWELLING & MOODY
architecture planning interiors

HEADQUARTERS OFFICE:
815 Colorado Blvd, Suite 200
Los Angeles, CA. 90041
P 323.543.8300
E-Mail: fm-pasadena@flewelling-moody.com

ANTELOPE VALLEY OFFICE:
1035 West Lancaster Boulevard
Lancaster, California 93534
P 661.949.0771
E-Mail: fm-lancaster@flewelling-moody.com

An Employee Owned Corporation

ARCHITECT

CONSULTANT

OASIS ASSOCIATES
LANDSCAPE ARCHITECTURE + PLANNING
3427 MIGUELITO COURT
SAN LUIS OBISPO
CALIFORNIA 93401
P 805.541.4509
F 805.546-0525
RLA 2248 CLARB #707

Drawn by SEW

Checked by MLC

Revisions

No.	Date	Description

All dimensions must be checked at the job by the contractor who accepts full responsibility for their accuracy under the contract. These plans & the specifications in connection therewith have been prepared for a specific site, Any and all responsibility for their use in whole or in part on any other site is hereby disclaimed by Flewelling & Moody.

CITY OF RIDGECREST

SGT. JOHN PINNEY MEMORIAL
POOL REPLACEMENT

205 S. WARNER STREET
RIDGECREST, CA 93555

Drawing Title

LANDSCAPE DETAILS

LANDSCAPE ARCHITECTS SEAL

Job No. 3055-0100

Sheet No. L4.02

Date 11-22-2024

Maximum Applied Water Allowance Calculations for New and Rehabilitated Non-Residential Landscapes

Enter value in Pale Blue Cells

Tan Cells Show Results

Messages and Warnings

	Lancaster	Name of City
Click on the blue cell on right to Pick City Name		
ET_o of City from Appendix A	71.10	ET_o (inches/year)
	10151	Overhead Landscape Area (ft^2)
	0	Drip Landscape Area (ft^2)
	1540	SLA (ft^2)
Total Landscape Area	11,691	
Results:		
(ET_o) x (0.62) x [(0.45 x LA) + (1.0 - 0.45) X SLA)]	-	Gallons
	-	Cubic Feet
	-	HCF
	-	Acre-feet
	-	Millions of Gallons
MAWA calculation incorporating Effective Precipitation (Optional)		
Precipitation (Optional)		
ET_o of City from Appendix A	71	ET_o (inches/year)
Total Landscape Area	11,691	LA (ft^2)
Special Landscape Area	1,540	SLA (ft^2)
	17	Total annual precipitation (inches/year)
Enter Effective Precipitation	4.25	Eppt (in/yr)(25% of total annual precipitation)
Results:		
MAWA = [$(ET_o$- Eppt) x (0.62)] x [(0.45 x LA) + ((1.0 - 0.45) x SLA)]	253,156	Gallons
	33,842.17	Cubic Feet
	338.42	HCF
	0.78	Acre-feet
	0.25	Millions of Gallons

Estimated Total Water Use

Equation: ETWU = ET_o x 0.62 x [((PF x HA)/IE) + SLA]; Considering precipitation ETWA = (ETo-Eppt) x 0.62 x [((PF x HA)/IE) +SLA]

Enter values in Pale Blue Cells

Tan Cells Show Results

Messages and Warnings

Irrigation Efficiency Default Value for overhead 0.75 and drip 0.81.

Plant Water Use Type	Plant Factor
Very Low	0 - 0.1
Low	0.2 - 0.3
Medium	0.4 - 0.6
High	0.7 - 1.0
SLA	1.0

Hydrozone	Select System From the Dropdown List click on cell below	Plant Water Use Type (s) (low, medium, high)	Plant Factor (PF)	Hydrozone Area (HA) (ft^2) Without SLA	Enter Irrigation Efficiency (IE)	(PF x HA (ft^2))/IE
Zone 1	Overhead Spray	Low	0.20	831	0.75	222
Zone 2	Overhead Spray	Medium	0.45	1,069	0.75	641
Zone 3	Drip	Low	0.20	-	0.81	0
Zone 4	Overhead Spray	Low	0.20	639	0.75	170
Zone 5	Overhead Spray	Low	0.20	431	0.75	115
Zone 6	Drip	Low	0.20	-	0.81	0
Zone 7	Overhead Spray	Low	0.20	402	0.75	
Zone 8	Overhead Spray	Low	0.20	612	0.75	163
Zone 9	Drip	Low	0.20	-	0.81	0
Zone 10	Overhead Spray	Low	0.20	224	0.75	60
Zone 11	Overhead Spray	Low	0.20	614	0.75	164
Zone 12	Overhead Spray	Low	0.20	340	0.75	91
Zone 13	Overhead Spray	Low	0.20	1,158	0.75	309
Zone 14	Drip	Low	0.20	-	0.81	0
Zone 15	Overhead Spray	Low	0.20	479	0.75	128
Zone 16	Overhead Spray	Low	0.20	584	0.75	156
Zone 17	Overhead Spray	Low	0.20	651	0.75	174
Zone 18						
Zone 19	Overhead Spray	Low	0.20	422	0.75	113
Zone 20	Drip	Low	0.20	-	0.81	0
Zone 21	Overhead Spray	Low	0.20	194	0.75	52
Zone 22	Overhead Spray	Low	0.20	320	0.75	85
Zone 23	Overhead Spray	Low	0.20	164	0.75	44
Zone 24	Overhead Spray	Low	0.20	589	0.75	157
Zone 25	Overhead Spray	Low	0.20	428	0.75	114
						2,956
		SLA		1,540		1,540
			Sum	11,691		

Results

MAWA = 253,156

ETWU = 186,348 Gallons
24,911 Cubic Feet
249.11 HCF
0.57 Acre-feet
0.19 Millions of Gallons

ETWU complies with MAWA

18 MAWA / ETWU CALCULATIONS

AGENCY

PTN._____ - _____ APPL._____ - _____

FLEWELLING & MOODY
architecture planning interiors

HEADQUARTERS OFFICE:
815 Colorado Blvd, Suite 200
Los Angeles, CA. 90041
P 323.543.8300
E-Mail: fm-pasadena@flewelling-moody.com

ANTELOPE VALLEY OFFICE:
1035 West Lancaster Boulevard
Lancaster, California 93534
P 661.949.0771
E-Mail: fm-lancaster@flewelling-moody.com

An Employee Owned Corporation

ARCHITECT

CONSULTANT

OASIS ASSOCIATES
LANDSCAPE ARCHITECTURE + PLANNING

3427 MIGUELITO COURT
SAN LUIS OBISPO
CALIFORNIA, 93401
P 805.541.4509
F 805.546-0525
RLA 2248 CLARB #907

Drawn by SEW

Checked by MLC

Revisions

No.	Date	Description
1	08/27/2025	BID ALTERNATE

All dimensions must be checked at the job by the contractor who accepts full responsibility for their accuracy under the contract. These plans & the specifications in connection therewith have been prepared for a specific site. Any and all responsibility for their use in whole or in part on any other site is hereby disclaimed by Flewelling & Moody.

CITY OF RIDGECREST

SGT. JOHN PINNEY MEMORIAL POOL REPLACEMENT

205 S. WARNER STREET
RIDGECREST, CA 93555

Drawing Title

LANDSCAPE DETAILS
ALT 2

Job No. 3055.0000

Sheet No. L4.02A2

Date 6-5-2025

LANDSCAPE ARCHITECTS SEAL

Maximum Applied Water Allowance Calculations for New and Rehabilitated Non-Residential Landscapes

Enter value in Pale Blue Cells

Tan Cells Show Results

Messages and Warnings

	Lancaster	Name of City
Click on the blue cell on right to Pick City Name		
ET_o of City from Appendix A	71.10	ET_o (inches/year)
	15342	Overhead Landscape Area (ft^2)
	0	Drip Landscape Area (ft^2)
	1540	SLA (ft^2)
Total Landscape Area	16,882	
Results:		
(ET_o) x (0.62) x [(0.45 x LA) + (1.0 - 0.45) X SLA)]	-	Gallons
	-	Cubic Feet
	-	HCF
	-	Acre-feet
	-	Millions of Gallons
MAWA calculation incorporating Effective Precipitation (Optional)		
Precipitation (Optional)		
ET_o of City from Appendix A	71	ET_o (inches/year)
Total Landscape Area	16,882	LA (ft^2)
Special Landscape Area	1,540	SLA (ft^2)
	17	Total annual precipitation (inches/year)
Enter Effective Precipitation	4.25	Eppt (in/yr)(25% of total annual precipitation)
Results:		
MAWA = $[(ET_o - Eppt) \times (0.62)] \times [(0.45 \times LA) + ((1.0 - 0.45) \times SLA)]$	349,974	Gallons
	46,784.92	Cubic Feet
	467.85	HCF
	1.07	Acre-feet
	0.35	Millions of Gallons

Estimated Total Water Use

Equation: ETWU = ET_o x 0.62 x [((PF x HA)/IE) + SLA]; Considering precipitation ETWA = (ETo-Eppt) x 0.62 x [((PF x HA)/IE) +SLA]

Enter values in Pale Blue Cells

Tan Cells Show Results

Messages and Warnings

Irrigation Efficiency Default Value for overhead 0.75 and drip 0.81.

Plant Water Use Type	Plant Factor
Very Low	0 - 0.1
Low	0.2 - 0.3
Medium	0.4 - 0.6
High	0.7 - 1.0
SLA	1.0

Hydrozone	Select System From the Dropdown List click on cell below	Plant Water Use Type (s) (low, medium, high)	Plant Factor (PF)	Hydrozone Area (HA) (ft^2) Without SLA	Enter Irrigation Efficiency (IE)	(PF x HA (ft^2))/IE
Zone 1	Overhead Spray	Low	0.20	831	0.75	222
Zone 2	Overhead Spray	Medium	0.45	1,069	0.75	641
Zone 3	Drip	Low	0.20	-	0.81	0
Zone 4	Overhead Spray	Low	0.20	639	0.75	170
Zone 5	Overhead Spray	Low	0.20	431	0.75	115
Zone 6	Drip	Low	0.20	-	0.81	0
Zone 7	Overhead Spray	Low	0.20	402		
Zone 8	Overhead Spray	Low	0.20	612	0.75	163
Zone 9	Drip	Low	0.20	-	0.81	0
Zone 10	Overhead Spray	Low	0.20	224	0.75	60
Zone 11	Overhead Spray	Low	0.20	614	0.75	164
Zone 12	Overhead Spray	Low	0.20	340	0.75	91
Zone 13	Overhead Spray	Low	0.20	1,158	0.75	309
Zone 14	Drip	Low	0.20	-	0.81	0
Zone 15	Overhead Spray	Low	0.20	479	0.75	128
Zone 16	Overhead Spray	Low	0.20	584	0.75	156
Zone 17	Overhead Spray	Low	0.20	651	0.75	174
Zone 18						
Zone 19	Drip	Low	0.20	-	0.81	0
Zone 20	Overhead Spray	Low	0.20	1,210	0.75	323
Zone 21	Overhead Spray	Low	0.20	946	0.75	252
Zone 22	Overhead Spray	Low	0.20	730	0.75	195
Zone 23	Overhead Spray	Low	0.20	817	0.75	218
Zone 24	Overhead Spray	Low	0.20	530	0.75	141
Zone 25	Drip	Low	0.20	-	0.81	0
Zone 26	Overhead Spray	Low	0.20	422	0.75	113
Zone 27	Drip	Low	0.20	-	0.81	0
Zone 28	Overhead Spray	Low	0.20	538	0.75	143
Zone 29	Overhead Spray	Low	0.20	934	0.75	249
Zone 30	Overhead Spray	Low	0.20	164	0.75	44
Zone 31	Overhead Spray	Low	0.20	589	0.75	157
Zone 32	Overhead Spray	Low	0.20	428	0.75	114
						4,340
		SLA		1,540		1,540
			Sum	16,882		

Results

MAWA = 349,974

ETWU = 243.722 Gallons
32.581 Cubic Feet
325.81 HCF
0.75 Acre-feet
0.24 Millions of Gallons

ETWU complies with MAWA

18 MAWA / ETWU CALCULATIONS

AGENCY

PTN._____-_____ APPL._____-_____

FLEWELLING & MOODY
architecture planning interiors

HEADQUARTERS OFFICE:
815 Colorado Blvd, Suite 200
Los Angeles, CA. 90041
P 323.543.8300
E-Mail: fm-pasadena@flewelling-moody.com

ANTELOPE VALLEY OFFICE:
1035 West Lancaster Boulevard
Lancaster, California 93534
P 661.949.0771
E-Mail: fm-lancaster@flewelling-moody.com

An Employee Owned Corporation

ARCHITECT

CONSULTANT

OASIS ASSOCIATES
LANDSCAPE ARCHITECTURE + PLANNING
3427 MIGUELITO COURT
SAN LUIS OBISPO
CALIFORNIA 93401
P 805.541.4509
F 805.546-0525
RLA 2248 CLARB #907

Drawn by SEW

Checked by MLC

Revisions

No.	Date	Description
1	08/27/2025	BID ALTERNATE

All dimensions must be checked at the job by the contractor who accepts full responsibility for their accuracy under the contract. These plans & the specifications in connection therewith have been prepared for a specific site. Any and all responsibility for their use in whole or in part on any other site is hereby disclaimed by Flewelling & Moody.

CITY OF RIDGECREST

SGT. JOHN PINNEY MEMORIAL
POOL REPLACEMENT

205 S. WARNER STREET
RIDGECREST, CA 93555

Drawing Title

LANDSCAPE DETAILS
ALT 6

Job No. 3055.0000

Sheet No. L4.02A6

Date 6-5-2025

REGISTERED LANDSCAPE ARCHITECT — 2499 — 11/30/25 — STATE OF CALIFORNIA

LANDSCAPE ARCHITECTS SEAL

1

Maximum Applied Water Allowance Calculations for New and Rehabilitated Non-Residential Landscapes

Enter value in Pale Blue Cells

Tan Cells Show Results

Messages and Warnings

Click on the blue cell on right to Pick City Name	Lancaster	Name of City
ET_o of City from Appendix A	71.10	ET_o (inches/year)
	15856	Overhead Landscape Area (ft^2)
	0	Drip Landscape Area (ft^2)
	1540	SLA (ft^2)
Total Landscape Area	17,396	
Results:		
(ET_o) x (0.62) x [(0.45 x LA) + (1.0 - 0.45) X SLA)]	-	Gallons
	-	Cubic Feet
	-	HCF
	-	Acre-feet
	-	Millions of Gallons
MAWA calculation incorporating Effective Precipitation (Optional) Precipitation (Optional)		
ET_o of City from Appendix A	71	ET_o (inches/year)
Total Landscape Area	17,396	LA (ft^2)
Special Landscape Area	1,540	SLA (ft^2)
	17	Total annual precipitation (inches/year)
Enter Effective Precipitation	4.25	Eppt (in/yr)(25% of total annual precipitation)
Results:		
MAWA = $[(ET_o - Eppt) \times (0.62)] \times [(0.45 \times LA) + ((1.0 - 0.45) \times SLA)]$	359,561	Gallons
	48,066.48	Cubic Feet
	480.66	HCF
	1.10	Acre-feet
	0.36	Millions of Gallons

Estimated Total Water Use

Equation: ETWU = ET_o x 0.62 x [((PF x HA)/IE) + SLA]; Considering precipitation ETWA = (ETo-Eppt) x 0.62 x [((PF x HA)/IE) +SLA]

Enter values in Pale Blue Cells

Tan Cells Show Results

Messages and Warnings

Irrigation Efficiency Default Value for overhead 0.75 and drip 0.81.

Plant Water Use Type	Plant Factor
Very Low	0 - 0.1
Low	0.2 - 0.3
Medium	0.4 - 0.6
High	0.7 - 1.0
SLA	1.0

Hydrozone	Select System From the Dropdown List click on cell below	Plant Water Use Type (s) (low, medium, high)	Plant Factor (PF)	Hydrozone Area (HA) (ft^2) Without SLA	Enter Irrigation Efficiency (IE)	(PF x HA (ft^2))/IE
Zone 1	Overhead Spray	Low	0.20	831	0.75	222
Zone 2	Overhead Spray	Medium	0.45	1,069	0.75	641
Zone 3	Drip	Low	0.20	-	0.81	0
Zone 4	Overhead Spray	Low	0.20	639	0.75	170
Zone 5	Overhead Spray	Low	0.20	431	0.75	115
Zone 6	Drip	Low	0.20	-	0.81	0
Zone 7	Overhead Spray	Low	0.20	402		
Zone 8	Overhead Spray	Low	0.20	612	0.75	163
Zone 9	Drip	Low	0.20	-	0.81	0
Zone 10	Overhead Spray	Low	0.20	224	0.75	60
Zone 11	Overhead Spray	Low	0.20	614	0.75	164
Zone 12	Overhead Spray	Low	0.20	340	0.75	91
Zone 13	Overhead Spray	Low	0.20	1,158	0.75	309
Zone 14	Drip	Low	0.20	-	0.81	0
Zone 15	Overhead Spray	Low	0.20	479	0.75	128
Zone 16	Overhead Spray	Low	0.20	584	0.75	156
Zone 17	Overhead Spray	Low	0.20	651	0.75	174
Zone 18						
Zone 19	Drip	Low	0.20	-	0.81	0
Zone 20	Overhead Spray	Low	0.20	1,210	0.75	323
Zone 21	Overhead Spray	Low	0.20	946	0.75	252
Zone 22	Overhead Spray	Low	0.20	730	0.75	195
Zone 23	Overhead Spray	Low	0.20	817	0.75	218
Zone 24	Overhead Spray	Low	0.20	530	0.75	141
Zone 25	Drip	Low	0.20	-	0.81	0
Zone 26	Overhead Spray	Low	0.20	422	0.75	113
Zone 27	Drip	Low	0.20	-	0.81	0
Zone 28	Overhead Spray	Low	0.20	194	0.75	52
Zone 29	Overhead Spray	Low	0.20	320	0.75	85
Zone 30	Overhead Spray	Low	0.20	538	0.75	143
Zone 31	Overhead Spray	Low	0.20	934	0.75	249
Zone 32	Overhead Spray	Low	0.20	164	0.75	44
Zone 33	Overhead Spray	Low	0.20	589	0.75	157
Zone 34	Overhead Spray	Low	0.20	428	0.75	114
						4,477
		SLA		1,540		1,540
			Sum	17,396		

Results

MAWA = 359,561

ETWU = 249,403 Gallons
33,340 Cubic Feet
333.40 HCF
0.77 Acre-feet
0.25 Millions of Gallons

ETWU complies with MAWA

17 MAWA / ETWU CALCULATIONS

AGENCY

PTN._____ APPL._____

FLEWELLING & MOODY
architecture planning interiors

HEADQUARTERS OFFICE:
815 Colorado Blvd, Suite 200
Los Angeles, CA. 90041
P 323.543.8300
E-Mail: fm-pasadena@flewelling-moody.com

ANTELOPE VALLEY OFFICE:
1035 West Lancaster Boulevard
Lancaster, California 93534
P 661.949.0771
E-Mail: fm-lancaster@flewelling-moody.com

An Employee Owned Corporation

ARCHITECT

CONSULTANT

OASIS ASSOCIATES
LANDSCAPE ARCHITECTURE + PLANNING
3427 MIGUELITO COURT
SAN LUIS OBISPO
CALIFORNIA 93401
P 805.541.4509
F 805.546-0525
RLA 2248 CLARB #907

Drawn by SEW

Checked by MLC

Revisions

No.	Date	Description
1	08/27/2025	BID ALTERNATE

All dimensions must be checked at the job by the contractor who accepts full responsibility for their accuracy under the contract. These plans & the specifications in connection therewith have been prepared for a specific site. Any and all responsibility for their use in whole or in part on any other site is hereby disclaimed by Flewelling & Moody.

CITY OF RIDGECREST

SGT. JOHN PINNEY MEMORIAL
POOL REPLACEMENT

205 S. WARNER STREET
RIDGECREST, CA 93555

Drawing Title

LANDSCAPE DETAILS
ALT 7

REGISTERED LANDSCAPE ARCHITECT — 11/30/25 — STATE OF CALIFORNIA

LANDSCAPE ARCHITECTS SEAL

Job No. 3055.0000

Date 6-5-2025

Sheet No. L4.02A7

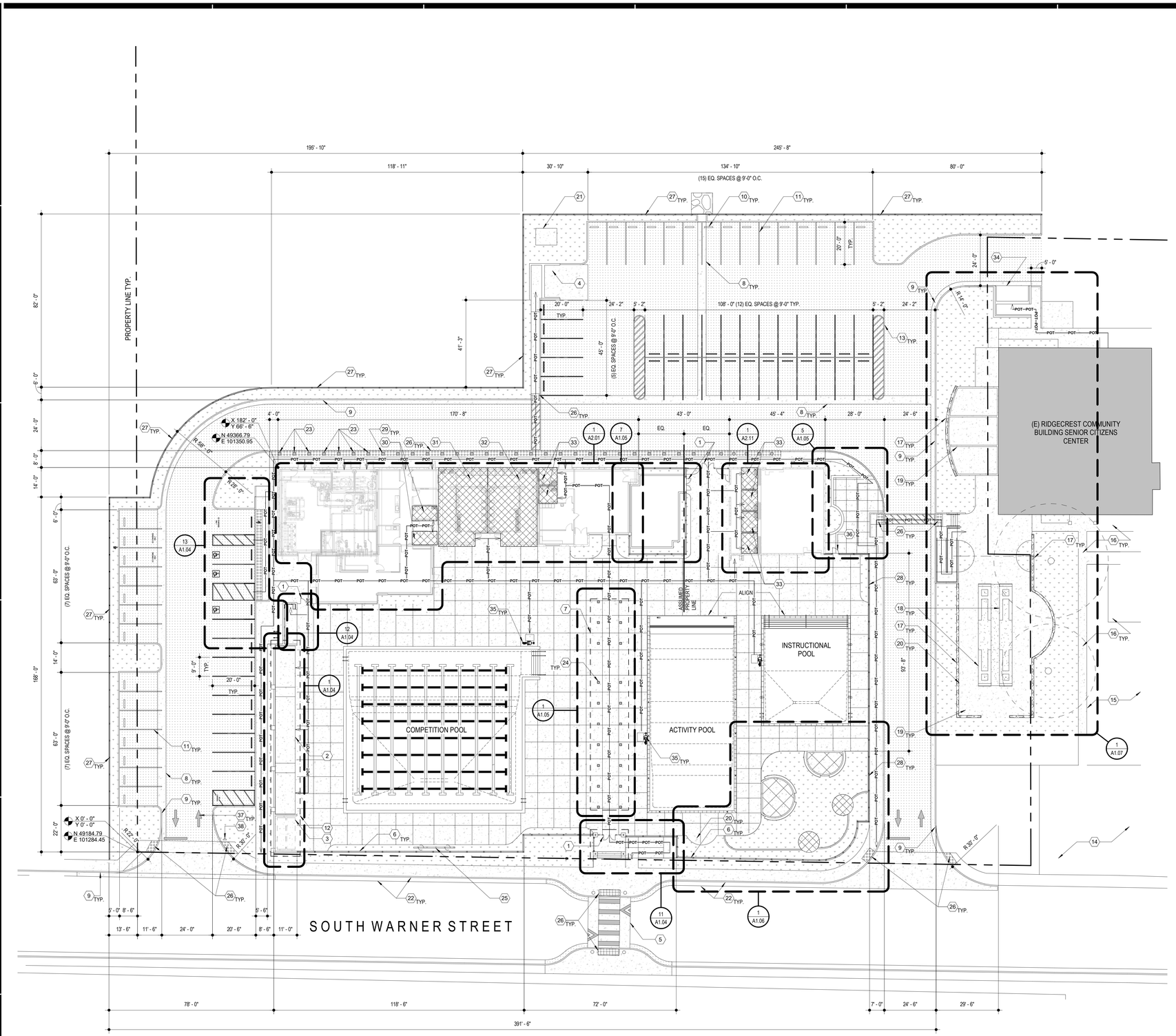

OVERALL SITE PLAN RECONSTRUCTION

SCALE: 1" = 20'-0"

1 / A1.01

N

GENERAL NOTES

1. REFER TO CIVIL, STRUCTURAL, PLUMBING, LOW VOLTAGE, POOL, LANDSCAPE, AND ELECTRICAL DRAWINGS FOR ADDITIONAL APPLICABLE SCOPE OF WORK.
2. CONTRACTOR SHALL VERIFY ALL CONDITIONS PRIOR TO CONSTRUCTION. ALL DISCREPANCIES SHALL BE BROUGHT TO THE ATENTION OF OWNER AND ARCHITECT PRIOR TO COMMENCING WORK.
3. PATCH AND REPAIR, OR REPLACE, ALL EXISTING ADJACENT SURFACES AND ITEMS AFFECTED BY NEW WORK. RESTORE FINISHES AND ITEMS TO MATCH EXISTING.
4. CONTRACTOR SHALL COORDINATE ALL REQUIRED SCOPE OF WORK WITH ALL TRADES TO COMMENCING WORK.
5. REFER TO POOL DRAWINGS FOR LOCATION OF COMEPETION POOL, ACTIVITY POOL, AND INSTRUCTIONAL POOL.

LEGEND

- (N) LANDSCAPE
- (N) CONCRETE
- (N) AC PAVING
- X 0' - 0" / Y 0' - 0" — DATUM POINT
- N 0.0 / E 0.0 — COORDINATES BASED ON ASSUMED DATUM ON TOPOGRAPHIC SURVEY PROVIDED BY THE CITY
- (N) ACCESSIBLE FACILITIES
- POT — ACCESSIBLE PATH OF TRAVEL

DESIGN PROFESSIONAL IN GENERAL RESPONSIBLE CHARGE STATEMENT:

PATH OF TRAVEL (P.O.T.) AS INDICATED IS A COMMON BARRIER FREE ACCESS ROUTE WITHOUT ANY ABRUPT VERTICAL CHANGES EXCEEDING 1/2" AT 1:2 MAXIMUM SLOPE, EXCEPT THAT LEVEL CHANGES DO NOT EXCEED 1/4" VERTICAL. P.O.T. IS A MINIMUM OF 48" WIDE. THE SURFACE SHALL BE FIRM, STABLE, AND SLIP RESISTANT. PASSING SPACES (11B-805.5.3) AT LEAST 60" X 60" SHALL BE LOCATED NOT MORE THAN 200' APART. PARTS OF P.O.T. WITH CONTINUOUS GRADIENTS SHALL HAVE 60" LEVEL AREAS AT INTERVALS OF 400' MAXIMUM (11B-401.1). SLOPES GREATER THAN 5% TO A MAXIMUM OF 8.33% SHALL BE CONSIDERED AS RAMP (11B405). THERE SHALL BE NO DROP-OFF OVER 4" ALONG THE EDGE OF WALK OR LANDING. P.O.T. SHALL BE MAINTAINED FREE OF OVERHANG OBSTRUCTIONS AND OBJECTS PROTRUDING GREATER THAN 4" FROM A WALL, BETWEEN 27" TO 80" ABOVE FINISHED GRADE. ARCHITECT SHALL VERIFY THAT NO BARRIERS EXIST IN THE PATH OF TRAVEL.

THE P.O.T. IDENTIFIED IN THESE CONSTRUCTION DOCUMENTS IS COMPLIANT WITH THE CURRENT APPLICABLE CALIFORNIA BUILDING CODE ACCESSIBILITY PROVISIONS FOR PATH OF TRAVEL REQUIREMENTS FOR ALTERNATIONS, ADDITIONS AND STRUCTURAL REPAIRS. AS PART OF THE DESIGN OF THIS PROJECT, THE P.O.T. WAS EXAMINED AND ANY ELEMENTS, COMPONENTS OR PORTIONS OF THE P.O.T. THAT WERE DETERMINED TO BE NONCOMPLIANT 1) HAVE BEEN IDENTIFIED AND 2) THE CORRECTIVE WORK NECESSARY TO BRING THEM INTO COMPLIANCE HAS BEEN INCLUDED WITHIN THE SCOPE OF THIS PROJECTS WORK THROUGH DETAILS, DRAWINGS AND SPECIFICATIONS INCORPERATED INTO THESE CONSTRUCTION DOCUMENTS. ANY NON COMPLIANT ELEMENTS, COMPONENTS OR PORTIONS OF THE P.O.T. THAT WILL BE NOT BE CORRECTED BY THIS PROJECT BASED ON VALUATION THRESHOLD LIMITATIONS OR A FIND OF UNREASONABLE HARDSHIP ARE SO INDICATED IN THESE CONSTRUCTION DOCUMENTS.

DURING CONSTRUCTION, IF P.O.T. ITEMS WITHIN THE SCOPE OF THE PROJECT REPRESENTED AS CODE COMPLIANT ARE FOUND TO BE NONCONFORMING BEYOND REASONABLE CONSTRUCTION TOLERANCE, THEY SHALL BE BROUGHT INTO COMPLIANCE WITH THE CBC AS A PART OF THIS PROJECT BY MEANS OF CONSTRUCTION CHANGE DOCUMENTS.

CONSTRUCTION NOTES

1. 7'-0" WIDE ACCESSIBLE GATE. SEE 6/A1.08 FOR ADDITIONAL INFORMATION
2. FLOOR ANCHORED 5 ROW BLEACHER SEATING BY NATIONAL RECREATION SYSTEMS. SEE STRUCTURAL DWGS FOR ADDITIONAL INFORMATION
3. COMPETITION POOL REEL STORAGE AREA, POOL TARPS SHOWN DASHED
4. STANDARD ACCESSIBLE TRASH ENCLOSURE PER CITY OF RIDGECREST ENGINEER DESIGN STANDARDS PLATE NO. M-1. SEE A1.10 FOR ADDITIONAL INFORMATION
5. RAISED PEDESTRIAN CROSSWALK, SEE CIVIL DWGS. FOR ADDITIONAL INFORMATION
6. 6'-0" H. WROUGHT IRON PERIMETER FENCING. SEE 2/A1.08 FOR ADDITIONAL INFORMATION
7. 18' X 100' HSS TUBE STEEL TRELLIS STRUCTURE. SEE 1/A1.05 FOR ADDITIONAL INFORMATION
8. 4' CONCRETE RIBBON GUTTER, SEE CIVIL DWGS. FOR ADDITIONAL INFORMATION
9. 6" CURB AND 24" GUTTER, SEE CIVIL DWGS. FOR ADDITIONAL INFORMATION
10. CONCRETE WHEEL STOP. SEE 6/A1.10 FOR ADDITIONAL INFORMATION
11. 4" THICK WHITE STRIPING, TYPICAL FOR STANDARD PARKING SPACES. SEE 8/1.10 FOR ADDITIONAL INFORMATION
12. 14'-0" X 102'-6" HSS ROOF STRUCTURE SHOWN DASHED. SEE 1/A1.04 FOR ADDITIONAL INFORMATION
13. 4" WIDE BLUE STRIPING
14. (E) AC PAVING PARKING LOT TO REMAIN. PROTECT IN PLACE
15. (E) LANDSCAPE TO REMAIN. PROTECT IN PLACE
16. (E) CONCRETE TO REMAIN. PROTECT IN PLACE
17. 18" TALL BLOCK SEATWALL W/ STUCCO FINISH. SEE LANDSCAPE DWGS FOR ADDITIONAL INFORMATION
18. HORSESHOE PIT. SEE LANDSCAPE DWGS FOR ADDITIONAL INFORMATION
19. PICNIC TABLE. OWNER FURNISHED CONTRACTOR INSTALLED
20. BENCH. OWNER FURNISHED CONTRACTOR INSTALLED
21. TRANSFORMER PAD. SEE ELECTRICAL DRAWINGS FOR ADDITIONAL INFORMATION
22. (E) CURB AND GUTTER TO REMAIN, PROTECT IN PLACE
23. 6" X 36" REMOVABLE STEEL BOLLARD POWDER COATED YELLOW BY POST GUARD OR APPROVED EQUAL @ 5'-0" O.C. SEE NOTE #3 ON 12/A1.10 FOR ADDITIONAL INFORMATION
24. 6" X 6" X 1/4" HSS COLUMN, TYP. SEE STRUCTURAL DRAWINGS FOR ADDITIONAL INFORMATION
25. FREE STANDING SCORE BOARD. SEE ELECTRICAL & POOL DRAWINGS FOR ADDITIONAL INFORMATION
26. TRUNCATED DOMES. SEE 5/A1.10 FOR ADDITIONAL INFORMATION
27. 6'-6" H. WROUGHT IRON PERIMETER FENCING. SEE 1/A1.08 FOR ADDITIONAL INFORMATION
28. 6'-0" H. WROUGHT IRON PERIMITER FENCING OVER CONCRETE RETAINING LOW WALL SHOWN SCREENED. SEE 3/A1.08 AND CIVIL DRAWINGS FOR ADDITIONAL INFORMATION
29. FIXED STEEL PEDESTRIAN BOLLARDS ALONG TRUNCATED DOMES, 7'-0" O.C MAX U.N.O. SEE DETAIL 12/A1.10 FOR ADDITIONAL INFORMATION
30. ACCESSIBLE ALL GENDER SINGLE OCCUPANCY RESTROOM AND SHOWER ROOM
31. ACCESIBLE MALE LOCKER ROOM, SHOWER ROOM AND RESTROOM FACILITIES
32. ACCESSIBLE FEMALE LOCKER ROOM, SHOWER ROOM AND RESTROOM FACILITIES
33. ACCESSIBLE ALL GENDER RESTROOM
34. (N) STANDARD ACCESSIBLE TRASH ENCLOSURE FOR (E) SENIOR CITIZENS CENTER PER CITY OF RIDGECREST ENGINEER DESIGN STANDARDS PLATE NO. M-1. SEE A1.10 FOR ADDITIONAL INFORMATION
35. ACCESSIBLE LIFT, SEE POOL DRAWINGS FOR ADDITIONAL INFORMATION
36. 2-8" WIDE ACCESSIBLE GATE. SEE 5/A1.08 FOR ADDITIONAL INFORMATION
37. DIRECTIONAL ARROW. SEE 7/A1.10 FOR ADDITIONAL INFORMATION
38. ENTRANCE WARNING SIGN. SEE 9/A1.10 FOR ADDITIONAL INFORMATION

AGENCY

REVIEWED FOR CODE COMPLIANCE BY: WILLDAN ENGINEERING

Approval of these plans & specifications shall not be construed to be a permit for, or an approval of any violation of any Federal, State, County or City laws or ordinances. One set of approved plans must be kept on the job until completion.

9:23:37 AM Jul 21, 2025

FLEWELLING & MOODY
architecture planning interiors

HEADQUARTERS OFFICE:
99 S. Lake Avenue, Suite 300
Pasadena, CA 91101
Phone: 323.543.8300
E-Mail: fm-pasadena@flewelling-moody.com

ANTELOPE VALLEY OFFICE:
1035 West Lancaster Bouldvard
Lancaster, California 93534
Phone: 661.949.0771
E-Mail: fm-lancaster@flewelling-moody.com

An Employee Owned Corporation

ARCHITECT

LICENSED ARCHITECT — MATT T. GABBARD — C-14211 — REN. DATE 08/31/2025 — STATE OF CALIFORNIA

CONSULTANT

Drawn by: Author

Check by: Checker

Revisions

No.	Date	Description

All dimensions must be checked at the job by the contractor who accepts full responsibility for their accuracy under the contract. These plans & the specifications in connection therewith have been prepared for a specific site. Any and all responsibility for their use in whole or in part on any other site is hereby disclaimed by Flewelling & Moody.

CITY OF RIDGECREST

SGT. JOHN PINNEY MEMORIAL POOL REPLACEMENT PROJECT

205 S WARNER ST, RIDGECREST, CA 93555

Drawing Title

OVERALL SITE PLAN

Job No. 3055-0100

Date 07/14/2025

Sheet No. **A1.01**

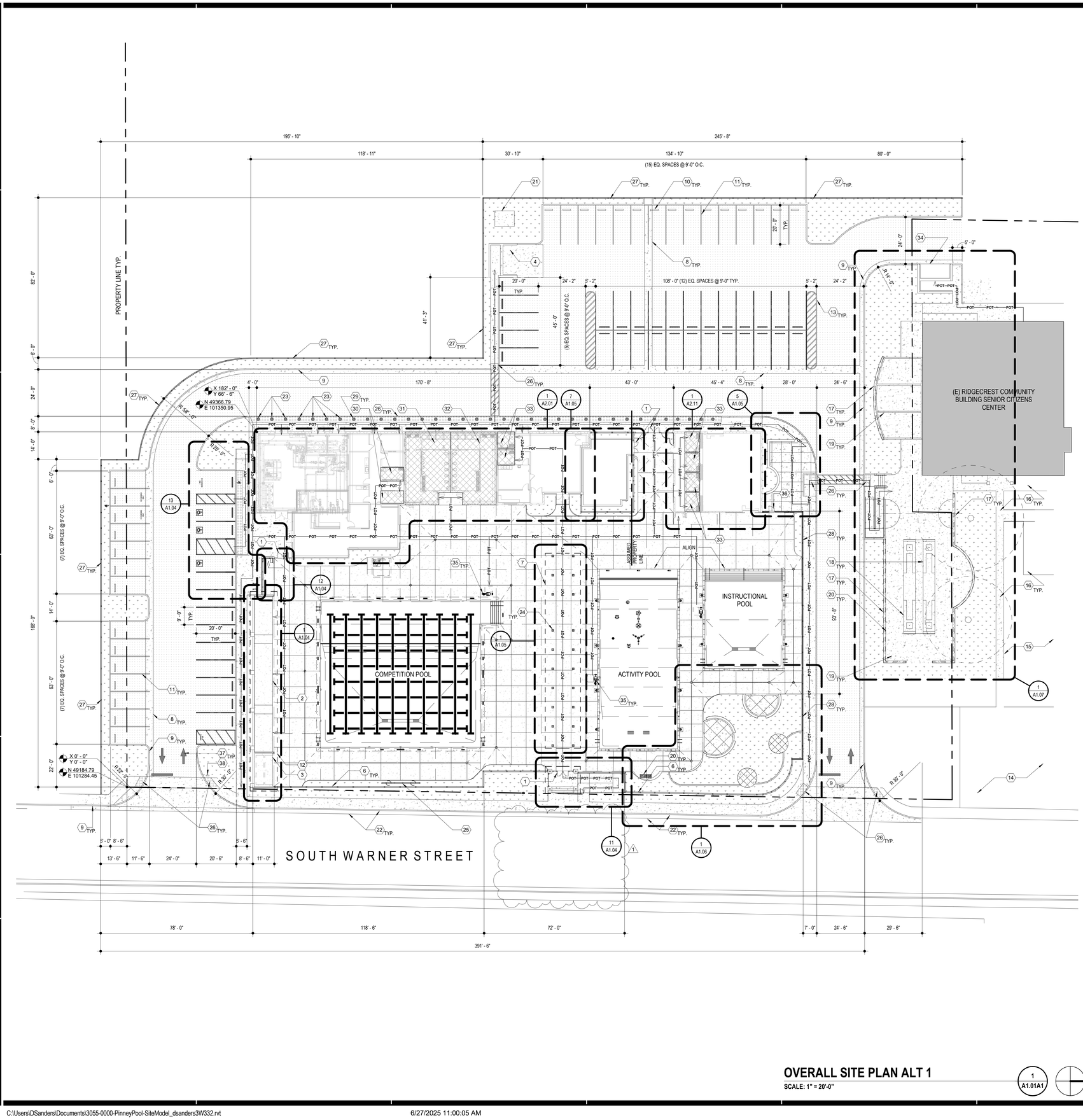

OVERALL SITE PLAN ALT 1

SCALE: 1" = 20'-0"

1 / A1.01A1

N

GENERAL NOTES

1. REFER TO CIVIL, STRUCTURAL, PLUMBING, LOW VOLTAGE, POOL, LANDSCAPE, AND ELECTRICAL DRAWINGS FOR ADDITIONAL APPLICABLE SCOPE OF WORK.
2. CONTRACTOR SHALL VERIFY ALL CONDITIONS PRIOR TO CONSTRUCTION. ALL DISCREPANCIES SHALL BE BROUGHT TO THE ATENTION OF OWNER AND ARCHITECT PRIOR TO COMMENCING WORK.
3. PATCH AND REPAIR, OR REPLACE, ALL EXISTING ADJACENT SURFACES AND ITEMS AFFECTED BY NEW WORK. RESTORE FINISHES AND ITEMS TO MATCH EXISTING.
4. CONTRACTOR SHALL COORDINATE ALL REQUIRED SCOPE OF WORK WITH ALL TRADES TO COMMENCING WORK.
5. REFER TO POOL DRAWINGS FOR LOCATION OF COMEPETION POOL, ACTIVITY POOL, AND INSTRUCTIONAL POOL.

LEGEND

- (N) LANDSCAPE
- (N) CONCRETE
- (N) AC PAVING
- X 0' - 0" / Y 0' - 0" — DATUM POINT
- N 0.0 / E 0.0 — COORDINATES BASED ON ASSUMED DATUM ON TOPOGRAPHIC SURVEY PROVIDED BY THE CITY
- (N) ACCESSIBLE FACILITIES
- — POT — ACCESSIBLE PATH OF TRAVEL

DESIGN PROFESSIONAL IN GENERAL RESPONSIBLE CHARGE STATEMENT:

PATH OF TRAVEL (P.O.T.) AS INDICATED IS A COMMON BARRIER FREE ACCESS ROUTE WITHOUT ANY ABRUPT VERTICAL CHANGES EXCEEDING 1/2" AT 1:2 MAXIMUM SLOPE, EXCEPT THAT LEVEL CHANGES DO NOT EXCEED 1/4" VERTICAL. P.O.T. IS A MINIMUM OF 48" WIDE. THE SURFACE SHALL BE FIRM, STABLE, AND SLIP RESISTANT. PASSING SPACES (11B-805.5.3) AT LEAST 60" X 60" SHALL BE LOCATED NOT MORE THAN 200' APART. PARTS OF P.O.T. WITH CONTINUOUS GRADIENTS SHALL HAVE 60" LEVEL AREAS AT INTERVALS OF 400' MAXIMUM (11B-401.1). SLOPES GREATER THAN 5% TO A MAXIMUM OF 8.33% SHALL BE CONSIDERED AS RAMP (11B405). THERE SHALL BE NO DROP-OFF OVER 4" ALONG THE EDGE OF WALK OR LANDING. P.O.T. SHALL BE MAINTAINED FREE OF OVERHANG OBSTRUCTIONS AND OBJECTS PROTRUDING GREATER THAN 4" FROM A WALL, BETWEEN 27" TO 80" ABOVE FINISHED GRADE. ARCHITECT SHALL VERIFY THAT NO BARRIERS EXIST IN THE PATH OF TRAVEL.

THE P.O.T. IDENTIFIED IN THESE CONSTRUCTION DOCUMENTS IS COMPLIANT WITH THE CURRENT APPLICABLE CALIFORNIA BUILDING CODE ACCESSIBILITY PROVISIONS FOR PATH OF TRAVEL REQUIREMENTS FOR ALTERNATIONS, ADDITIONS AND STRUCTURAL REPAIRS. AS PART OF THE DESIGN OF THIS PROJECT, THE P.O.T. WAS EXAMINED AND ANY ELEMENTS, COMPONENTS OR PORTIONS OF THE P.O.T. THAT WERE DETERMINED TO BE NONCOMPLIANT 1) HAVE BEEN IDENTIFIED AND 2) THE CORRECTIVE WORK NECCESSARY TO BRING THEM INTO COMPLIANCE HAS BEEN INCLUDED WITHIN THE SCOPE OF THIS PROJECTS WORK THROUGH DETAILS, DRAWINGS AND SPECIFICATIONS INCORPERATED INTO THESE CONSTRUCTION DOCUMENTS. ANY NON COMPLIANT ELEMENTS, COMPONENTS OR PORTIONS OF THE P.O.T. THAT WILL BE NOT BE CORRECTED BY THIS PROJECT BASED ON VALUATION THRESHOLD LIMITATIONS OR A FIND OF UNREASONABLE HARDSHIP ARE SO INDICATED IN THESE CONSTRUCTION DOCUMENTS.

DURING CONSTRUCTION, IF P.O.T. ITEMS WITHIN THE SCOPE OF THE PROJECT REPRESENTED AS CODE COMPLIANT ARE FOUND TO BE NONCONFORMING BEYOND REASONABLE CONSTRUCTION TOLERANCE, THEY SHALL BE BROUGHT INTO COMPLIANCE WITH THE CBC AS A PART OF THIS PROJECT BY MEANS OF CONSTRUCTION CHANGE DOCUMENTS.

CONSTRUCTION NOTES

1. 7'-0" WIDE ACCESSIBLE GATE. SEE 6/A1.08 FOR ADDITIONAL INFORMATION
2. FLOOR ANCHORED 5 ROW BLEACHER SEATING BY NATIONAL RECREATION SYSTEMS. SEE STRUCTURAL DWGS FOR ADDITIONAL INFORMATION
3. COMPETITION POOL REEL STORAGE AREA, POOL TARPS SHOWN DASHED
4. STANDARD ACCESSIBLE TRASH ENCLOSURE PER CITY OF RIDGECREST ENGINEER DESIGN STANDARDS PLATE NO. M-1. SEE A1.10 FOR ADDITIONAL INFORMATION
6. 6'-0" H. WROUGHT IRON PERIMETER FENCING. SEE 2/A1.08 FOR ADDITIONAL INFORMATION
7. 18' X 100' HSS TUBE STEEL TRELLIS STRUCTURE. SEE 1/A1.05 FOR ADDITIONAL INFORMATION
8. 4' CONCRETE RIBBON GUTTER, SEE CIVIL DWGS. FOR ADDITIONAL INFORMATION
9. 6" CURB AND 24" GUTTER, SEE CIVIL DWGS. FOR ADDITIONAL INFORMATION
10. CONCRETE WHEEL STOP. SEE 6/A1.10 FOR ADDITIONAL INFORMATION
11. 4" THICK WHITE STRIPING, TYPICAL FOR STANDARD PARKING SPACES. SEE 8/1.10 FOR ADDITIONAL INFORMATION
12. 14'-0" X 102'-6" HSS ROOF STRUCTURE SHOWN DASHED. SEE 1/A1.04 FOR ADDITIONAL INFORMATION
13. 4" WIDE BLUE STRIPING
14. (E) AC PAVING PARKING LOT TO REMAIN. PROTECT IN PLACE
15. (E) LANDSCAPE TO REMAIN. PROTECT IN PLACE
16. (E) CONCRETE TO REMAIN. PROTECT IN PLACE
17. 18" TALL BLOCK SEATWALL W/ STUCCO FINISH. SEE LANDSCAPE DWGS FOR ADDITIONAL INFORMATION
18. HORSESHOE PIT. SEE LANDSCAPE DWGS FOR ADDITIONAL INFORMATION
19. PICNIC TABLE. OWNER FURNISHED CONTRACTOR INSTALLED
20. BENCH. OWNER FURNISHED CONTRACTOR INSTALLED
21. TRANSFORMER PAD. SEE ELECTRICAL DRAWINGS FOR ADDITIONAL INFORMATION
22. (E) CURB AND GUTTER TO REMAIN, PROTECT IN PLACE
23. 6" X 36" REMOVABLE STEEL BOLLARD POWDER COATED YELLOW BY POST GUARD @ 5'-0" O.C. SEE NOTE #3 ON 12/A1.10 FOR ADDITIONAL INFORMATION
24. 6" X 6" X 1/4" HSS COLUMN, TYP. SEE STRUCTURAL DRAWINGS FOR ADDITIONAL INFORMATION
25. FREE STANDING SCORE BOARD. SEE ELECTRICAL & POOL DRAWINGS FOR ADDITIONAL INFORMATION
26. TRUNCATED DOMES. SEE 5/A1.10 FOR ADDITIONAL INFORMATION
27. 6'-6" H. WROUGHT IRON PERIMETER FENCING. SEE 1/A1.08 FOR ADDITIONAL INFORMATION
28. 6'-0" H. WROUGHT IRON PERIMITER FENCING OVER CONCRETE RETAINING LOW WALL SHOWN SCREENED. SEE 3/A1.08 AND CIVIL DRAWINGS FOR ADDITIONAL INFORMATION
29. FIXED STEEL PEDESTRIAN BOLLARDS ALONG TRUNCATED DOMES, 7'-0" O.C MAX U.N.O. SEE DETAIL 12/A1.10 FOR ADDITIONAL INFORMATION
30. ACCESSIBLE ALL GENDER SINGLE OCCUPANCY RESTROOM AND SHOWER ROOM
31. ACCESIBLE MALE LOCKER ROOM, SHOWER ROOM AND RESTROOM FACILITIES
32. ACCESSIBLE FEMALE LOCKER ROOM, SHOWER ROOM AND RESTROOM FACILITIES
33. ACCESSIBLE ALL GENDER RESTROOM
34. (N) STANDARD ACCESSIBLE TRASH ENCLOSURE FOR (E) SENIOR CITIZENS CENTER PER CITY OF RIDGECREST ENGINEER DESIGN STANDARDS PLATE NO. M-1. SEE A1.10 FOR ADDITIONAL INFORMATION
35. ACCESSIBLE LIFT, SEE POOL DRAWINGS FOR ADDITIONAL INFORMATION
36. 2-8" WIDE ACCESSIBLE GATE. SEE 5/A1.08 FOR ADDITIONAL INFORMATION
37. DIRECTIONAL ARROW. SEE 7/A1.10 FOR ADDITIONAL INFORMATION
38. ENTRANCE WARNING SIGN. SEE 9/A1.10 FOR ADDITIONAL INFORMATION

AGENCY

FLEWELLING & MOODY
architecture planning interiors

HEADQUARTERS OFFICE:
99 S. Lake Avenue, Suite 300
Pasadena, CA 91101
Phone: 323.543.8300
E-Mail: fm-pasadena@flewelling-moody.com

ANTELOPE VALLEY OFFICE:
1035 West Lancaster Boulevard
Lancaster, California 93534
Phone: 661.949.0771
E-Mail: fm-lancaster@flewelling-moody.com

An Employee Owned Corporation

ARCHITECT

LICENSED ARCHITECT — MATT T. GANO — C-14211 — 08/31/2025 — STATE OF CALIFORNIA

CONSULTANT

Drawn by: Author
Check by: Checker
Revisions

No.	Date	Description
1	08/27/2025	BID ALTERNATE

All dimensions must be checked at the job by the contractor who accepts full responsibility for their accuracy under the contract. These plans & the specifications in connection therewith have been prepared for a specific site. Any and all responsibility for their use in whole or in part on any other site is hereby disclaimed by Flewelling & Moody.

CITY OF RIDGECREST

SGT. JOHN PINNEY MEMORIAL POOL REPLACEMENT PROJECT

205 S WARNER ST, RIDGECREST, CA 93555

Drawing Title

OVERALL SITE PLAN ALT 1

Job No. 3055-0100

Date 12/20/2024

Sheet No. **A1.01A1**

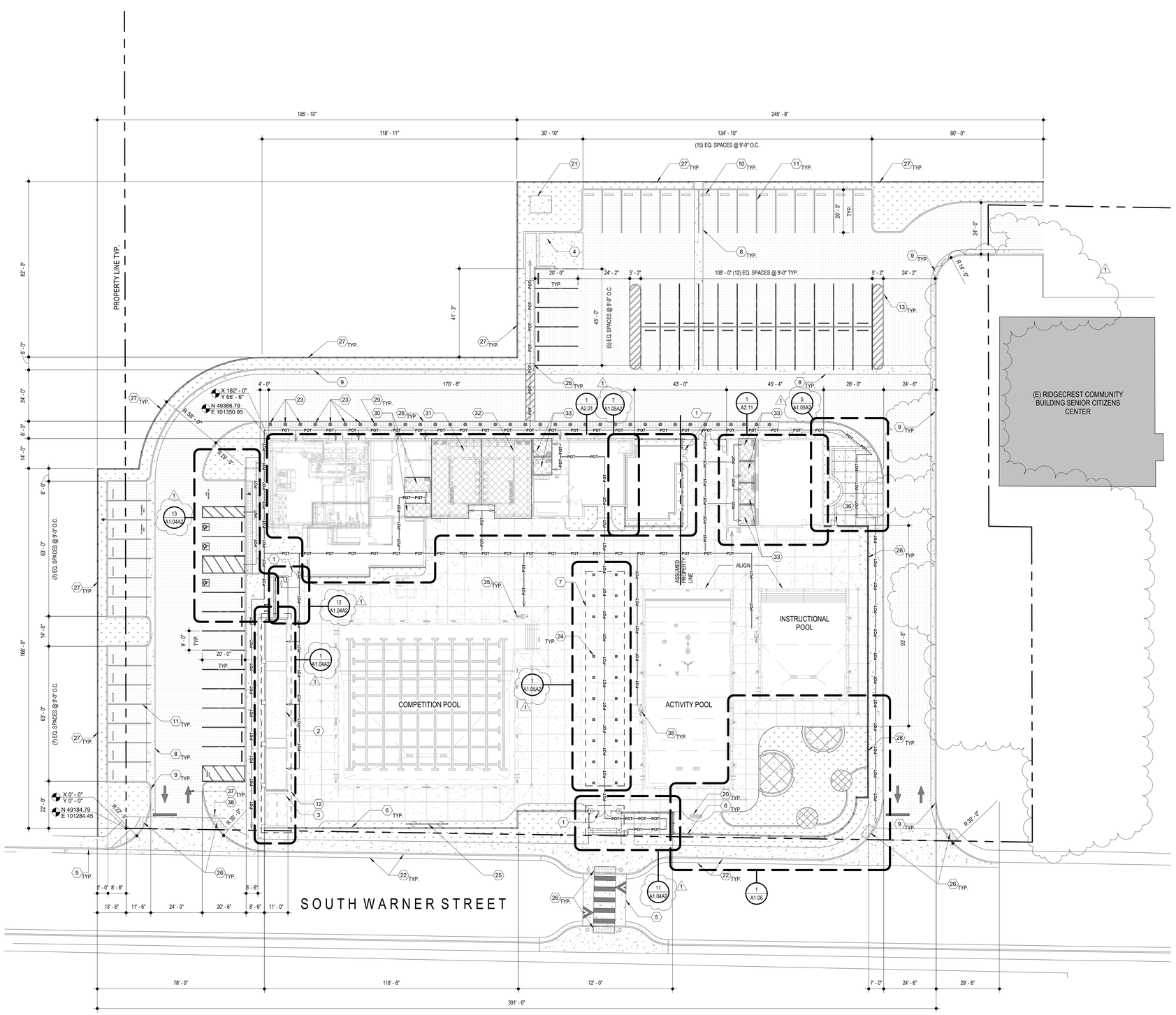

OVERALL SITE PLAN ALT 2

SCALE: 1" = 20'-0"

1 / A1.01A2

N

GENERAL NOTES

1. REFER TO CIVIL, STRUCTURAL, PLUMBING, LOW VOLTAGE, POOL, LANDSCAPE, AND ELECTRICAL DRAWINGS FOR ADDITIONAL APPLICABLE SCOPE OF WORK.
2. CONTRACTOR SHALL VERIFY ALL CONDITIONS PRIOR TO CONSTRUCTION. ALL DISCREPANCIES SHALL BE BROUGHT TO THE ATENTION OF OWNER AND ARCHITECT PRIOR TO COMMENCING WORK.
3. PATCH AND REPAIR, OR REPLACE, ALL EXISTING ADJACENT SURFACES AND ITEMS AFFECTED BY NEW WORK. RESTORE FINISHES AND ITEMS TO MATCH EXISTING.
4. CONTRACTOR SHALL COORDINATE ALL REQUIRED SCOPE OF WORK WITH ALL TRADES TO COMMENCING WORK.
5. REFER TO POOL DRAWINGS FOR LOCATION OF COMEPETION POOL, ACTIVITY POOL, AND INSTRUCTIONAL POOL.

LEGEND

- (N) LANDSCAPE
- (N) CONCRETE
- (N) AC PAVING
- X 0' - 0" / Y 0' - 0" — DATUM POINT
- N 0.0 / E 0.0 — COORDINATES BASED ON ASSUMED DATUM ON TOPOGRAPHIC SURVEY PROVIDED BY THE CITY
- (N) ACCESSIBLE FACILITIES
- — POT — ACCESSIBLE PATH OF TRAVEL

DESIGN PROFESSIONAL IN GENERAL RESPONSIBLE CHARGE STATEMENT:

PATH OF TRAVEL (P.O.T.) AS INDICATED IS A COMMON BARRIER FREE ACCESS ROUTE WITHOUT ANY ABRUPT VERTICAL CHANGES EXCEEDING 1/2" AT 1:2 MAXIMUM SLOPE, EXCEPT THAT LEVEL CHANGES DO NOT EXCEED 1/4" VERTICAL. P.O.T. IS A MINIMUM OF 48" WIDE. THE SURFACE SHALL BE FIRM, STABLE, AND SLIP RESISTANT. PASSING SPACES (11B-405.5.3) AT LEAST 60" X 60" SHALL BE LOCATED NOT MORE THAN 200' APART. PARTS OF P.O.T. WITH CONTINUOUS GRADIENTS SHALL HAVE 60" LEVEL AREAS AT INTERVALS OF 400' MAXIMUM (11B-401.1). SLOPES GREATER THAN 5% TO A MAXIMUM OF 8.33% SHALL BE CONSIDERED AS RAMP (11B405). THERE SHALL BE NO DROP-OFF OVER 4" ALONG THE EDGE OF WALK OR LANDING. P.O.T. SHALL BE MAINTAINED FREE OF OVERHANG OBSTRUCTIONS AND OBJECTS PROTRUDING GREATER THAN 4" FROM A WALL, BETWEEN 27" TO 80" ABOVE FINISHED GRADE. ARCHITECT SHALL VERIFY THAT NO BARRIERS EXIST IN THE PATH OF TRAVEL.

THE P.O.T. IDENTIFIED IN THESE CONSTRUCTION DOCUMENTS IS COMPLIANT WITH THE CURRENT APPLICABLE CALIFORNIA BUILDING CODE ACCESSIBILITY PROVISIONS FOR PATH OF TRAVEL REQUIREMENTS FOR ALTERNATIONS, ADDITIONS AND STRUCTURAL REPAIRS. AS PART OF THE DESIGN OF THIS PROJECT, THE P.O.T. WAS EXAMINED AND ANY ELEMENTS, COMPONENTS OR PORTIONS OF THE P.O.T. THAT WERE DETERMINED TO BE NONCOMPLIANT 1) HAVE BEEN IDENTIFIED AND 2) THE CORRECTIVE WORK NECESSARY TO BRING THEM INTO COMPLIANCE HAS BEEN INCLUDED WITHIN THE SCOPE OF THIS PROJECT'S WORK THROUGH DETAILS, DRAWINGS AND SPECIFICATIONS INCORPERATED INTO THESE CONSTRUCTION DOCUMENTS. ANY NON COMPLIANT ELEMENTS, COMPONENTS OR PORTIONS OF THE P.O.T. THAT WILL BE NOT BE CORRECTED BY THIS PROJECT BASED ON VALUATION THRESHOLD LIMITATIONS OR A FIND OF UNREASONABLE HARDSHIP ARE SO INDICATED IN THESE CONSTRUCTION DOCUMENTS.

DURING CONSTRUCTION, IF P.O.T. ITEMS WITHIN THE SCOPE OF THE PROJECT REPRESENTED AS CODE COMPLIANT ARE FOUND TO BE NONCONFORMING BEYOND REASONABLE CONSTRUCTION TOLERANCE, THEY SHALL BE BROUGHT INTO COMPLIANCE WITH THE CBC AS A PART OF THIS PROJECT BY MEANS OF CONSTRUCTION CHANGE DOCUMENTS.

CONSTRUCTION NOTES

1. 7'-0" WIDE ACCESSIBLE GATE. SEE 6/A1.08 FOR ADDITIONAL INFORMATION
2. FLOOR ANCHORED 5 ROW BLEACHER SEATING BY NATIONAL RECREATION SYSTEMS. SEE STRUCTURAL DWGS FOR ADDITIONAL INFORMATION
3. COMPETITION POOL REEL STORAGE AREA, POOL TARPS SHOWN DASHED
4. STANDARD ACCESSIBLE TRASH ENCLOSURE PER CITY OF RIDGECREST ENGINEER DESIGN STANDARDS PLATE NO. M-1. SEE A1.10 FOR ADDITIONAL INFORMATION
5. RAISED PEDESTRIAN CROSSWALK, SEE CIVIL DWGS. FOR ADDITIONAL INFORMATION
6. 6'-0" H. WROUGHT IRON PERIMETER FENCING. SEE 2/A1.08 FOR ADDITIONAL INFORMATION
7. 18' X 100' HSS TUBE STEEL TRELLIS STRUCTURE. SEE 1/A1.05A2 FOR ADDITIONAL INFORMATION
8. 4" CONCRETE RIBBON GUTTER, SEE CIVIL DWGS. FOR ADDITIONAL INFORMATION
9. 6" CURB AND 24" GUTTER, SEE CIVIL DWGS. FOR ADDITIONAL INFORMATION
10. CONCRETE WHEEL STOP. SEE 6/A1.10 FOR ADDITIONAL INFORMATION
11. 4" THICK WHITE STRIPING, TYPICAL FOR STANDARD PARKING SPACES. SEE 8/1.10 FOR ADDITIONAL INFORMATION
12. 14'-0" X 102'-6" HSS ROOF STRUCTURE SHOWN DASHED. SEE 1/A1.04A2 FOR ADDITIONAL INFORMATION
13. 4" WIDE BLUE STRIPING
14. (E) AC PAVING PARKING LOT TO REMAIN. PROTECT IN PLACE
15. (E) LANDSCAPE TO REMAIN. PROTECT IN PLACE
20. BENCH. OWNER FURNISHED CONTRACTOR INSTALLED
21. TRANSFORMER PAD. SEE ELECTRICAL DRAWINGS FOR ADDITIONAL INFORMATION
22. (E) CURB AND GUTTER TO REMAIN, PROTECT IN PLACE
23. 6" X 36" REMOVABLE STEEL BOLLARD POWDER COATED YELLOW BY POST GUARD @ 5'-0" O.C. SEE NOTE #3 ON 12/A1.10 FOR ADDITIONAL INFORMATION
24. 6" X 6" X 1/4" HSS COLUMN, TYP. SEE STRUCTURAL DRAWINGS FOR ADDITIONAL INFORMATION
25. FREE STANDING SCORE BOARD. SEE ELECTRICAL & POOL DRAWINGS FOR ADDITIONAL INFORMATION
26. TRUNCATED DOMES. SEE 5/A1.10 FOR ADDITIONAL INFORMATION
27. 6'-6" H. WROUGHT IRON PERIMETER FENCING. SEE 1/A1.08 FOR ADDITIONAL INFORMATION
28. 6'-0" H. WROUGHT IRON PERIMITER FENCING OVER CONCRETE RETAINING LOW WALL SHOWN SCREENED. SEE 3/A1.08 AND CIVIL DRAWINGS FOR ADDITIONAL INFORMATION
29. FIXED STEEL PEDESTRIAN BOLLARDS ALONG TRUNCATED DOMES, 7'-0" O.C MAX U.N.O. SEE DETAIL 12/A1.10 FOR ADDITIONAL INFORMATION
30. ACCESSIBLE ALL GENDER SINGLE OCCUPANCY RESTROOM AND SHOWER ROOM
31. ACCESIBLE MALE LOCKER ROOM, SHOWER ROOM AND RESTROOM FACILITIES
32. ACCESSIBLE FEMALE LOCKER ROOM, SHOWER ROOM AND RESTROOM FACILITIES
33. ACCESSIBLE ALL GENDER RESTROOM
35. ACCESSIBLE LIFT, SEE POOL DRAWINGS FOR ADDITIONAL INFORMATION
36. 2-8" WIDE ACCESSIBLE GATE. SEE 5/A1.08 FOR ADDITIONAL INFORMATION
37. DIRECTIONAL ARROW. SEE 7/A1.10 FOR ADDITIONAL INFORMATION
38. ENTRANCE WARNING SIGN. SEE 9/A1.10 FOR ADDITIONAL INFORMATION

AGENCY

FLEWELLING & MOODY
architecture planning interiors

HEADQUARTERS OFFICE:
99 S. Lake Avenue, Suite 300
Pasadena, CA 91101
Phone: 323.543.8300
E-Mail: fm-pasadena@flewelling-moody.com

ANTELOPE VALLEY OFFICE:
1035 West Lancaster Boulevard
Lancaster, California 93534
Phone: 661.949.0771
E-Mail: fm-lancaster@flewelling-moody.com

An Employee Owned Corporation

ARCHITECT

LICENSED ARCHITECT — MATT T. GAMBLE — C-14211 — 08/31/2025 — STATE OF CALIFORNIA

CONSULTANT

Drawn by: Author
Check by: Checker

Revisions

No.	Date	Description
1	08/27/2025	BID ALTERNATE

All dimensions must be checked at the job by the contractor who accepts full responsibility for their accuracy under the contract. These plans & the specifications in connection therewith have been prepared for a specific site. Any and all responsibility for their use in whole or in part on any other site is hereby disclaimed by Flewelling & Moody.

CITY OF RIDGECREST

SGT. JOHN PINNEY MEMORIAL POOL REPLACEMENT PROJECT

205 S WARNER ST, RIDGECREST, CA 93555

Drawing Title

OVERALL SITE PLAN ALT 2

Job No. 3055-0100

Date 12/20/2024

Sheet No. **A1.01A2**

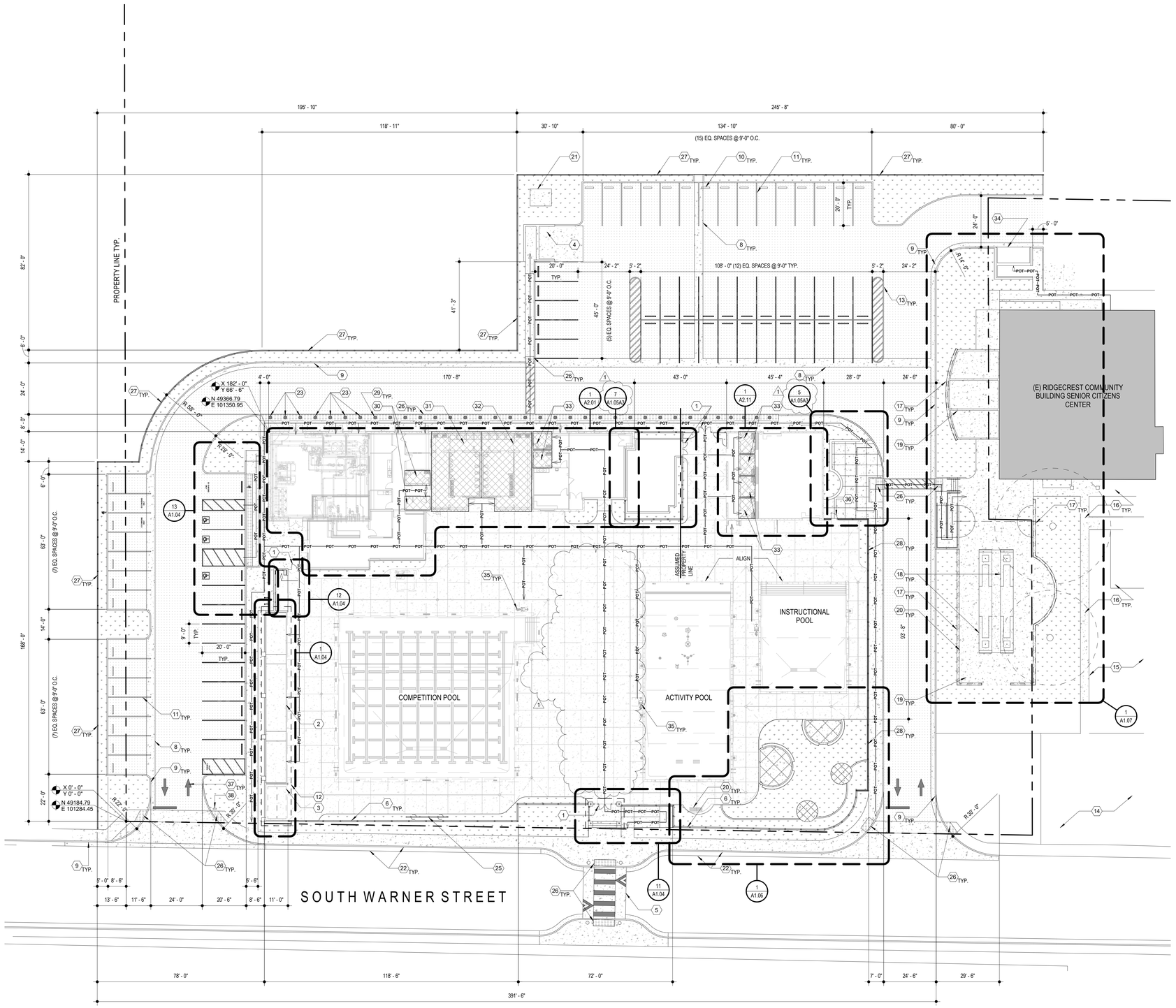

OVERALL SITE PLAN ALT 3

SCALE: 1" = 20'-0"

1 / A1.01A3

N

GENERAL NOTES

1. REFER TO CIVIL, STRUCTURAL, PLUMBING, LOW VOLTAGE, POOL, LANDSCAPE, AND ELECTRICAL DRAWINGS FOR ADDITIONAL APPLICABLE SCOPE OF WORK.
2. CONTRACTOR SHALL VERIFY ALL CONDITIONS PRIOR TO CONSTRUCTION. ALL DISCREPANCIES SHALL BE BROUGHT TO THE ATENTION OF OWNER AND ARCHITECT PRIOR TO COMMENCING WORK.
3. PATCH AND REPAIR, OR REPLACE, ALL EXISTING ADJACENT SURFACES AND ITEMS AFFECTED BY NEW WORK. RESTORE FINISHES AND ITEMS TO MATCH EXISTING.
4. CONTRACTOR SHALL COORDINATE ALL REQUIRED SCOPE OF WORK WITH ALL TRADES TO COMMENCING WORK.
5. REFER TO POOL DRAWINGS FOR LOCATION OF COMEPETION POOL, ACTIVITY POOL, AND INSTRUCTIONAL POOL.

LEGEND

- (N) LANDSCAPE
- (N) CONCRETE
- (N) AC PAVING
- X 0' - 0" / Y 0' - 0" — DATUM POINT
- N 0.0 / E 0.0 — COORDINATES BASED ON ASSUMED DATUM ON TOPOGRAPHIC SURVEY PROVIDED BY THE CITY
- (N) ACCESSIBLE FACILITIES
- POT — ACCESSIBLE PATH OF TRAVEL

DESIGN PROFESSIONAL IN GENERAL RESPONSIBLE CHARGE STATEMENT:

PATH OF TRAVEL (P.O.T.) AS INDICATED IS A COMMON BARRIER FREE ACCESS ROUTE WITHOUT ANY ABRUPT VERTICAL CHANGES EXCEEDING 1/2" AT 1:2 MAXIMUM SLOPE, EXCEPT THAT LEVEL CHANGES DO NOT EXCEED 1/4" VERTICAL. P.O.T. IS A MINIMUM OF 48" WIDE. THE SURFACE SHALL BE FIRM, STABLE, AND SLIP RESISTANT. PASSING SPACES (11B-805.5.3) AT LEAST 60" X 60" SHALL BE LOCATED NOT MORE THAN 200' APART. PARTS OF P.O.T. WITH CONTINUOUS GRADIENTS SHALL HAVE 60" LEVEL AREAS AT INTERVALS OF 400' MAXIMUM (11B-401.1). SLOPES GREATER THAN 5% TO A MAXIMUM OF 8.33% SHALL BE CONSIDERED AS RAMP (11B405). THERE SHALL BE NO DROP-OFF OVER 4" ALONG THE EDGE OF WALK OR LANDING. P.O.T. SHALL BE MAINTAINED FREE OF OVERHANG OBSTRUCTIONS AND OBJECTS PROTRUDING GREATER THAN 4" FROM A WALL, BETWEEN 27" TO 80" ABOVE FINISHED GRADE. ARCHITECT SHALL VERIFY THAT NO BARRIERS EXIST IN THE PATH OF TRAVEL.

THE P.O.T. IDENTIFIED IN THESE CONSTRUCTION DOCUMENTS IS COMPLIANT WITH THE CURRENT APPLICABLE CALIFORNIA BUILDING CODE ACCESSIBILITY PROVISIONS FOR PATH OF TRAVEL REQUIREMENTS FOR ALTERNATIONS, ADDITIONS AND STRUCTURAL REPAIRS. AS PART OF THE DESIGN OF THIS PROJECT, THE P.O.T. WAS EXAMINED AND ANY ELEMENTS, COMPONENTS OR PORTIONS OF THE P.O.T. THAT WERE DETERMINED TO BE NONCOMPLIANT 1) HAVE BEEN IDENTIFIED AND 2) THE CORRECTIVE WORK NECESSARY TO BRING THEM INTO COMPLIANCE HAS BEEN INCLUDED WITHIN THE SCOPE OF THIS PROJECTS WORK THROUGH DETAILS, DRAWINGS AND SPECIFICATIONS INCORPERATED INTO THESE CONSTRUCTION DOCUMENTS. ANY NON COMPLIANT ELEMENTS, COMPONENTS OR PORTIONS OF THE P.O.T. THAT WILL BE NOT BE CORRECTED BY THIS PROJECT BASED ON VALUATION THRESHOLD LIMITATIONS OR A FIND OF UNREASONABLE HARDSHIP ARE SO INDICATED IN THESE CONSTRUCTION DOCUMENTS.

DURING CONSTRUCTION, IF P.O.T. ITEMS WITHIN THE SCOPE OF THE PROJECT REPRESENTED AS CODE COMPLIANT ARE FOUND TO BE NONCONFORMING BEYOND REASONABLE CONSTRUCTION TOLERANCE, THEY SHALL BE BROUGHT INTO COMPLIANCE WITH THE CBC AS A PART OF THIS PROJECT BY MEANS OF CONSTRUCTION CHANGE DOCUMENTS.

CONSTRUCTION NOTES

1. 7'-0" WIDE ACCESSIBLE GATE. SEE 6/A1.08 FOR ADDITIONAL INFORMATION
2. FLOOR ANCHORED 5 ROW BLEACHER SEATING BY NATIONAL RECREATION SYSTEMS. SEE STRUCTURAL DWGS FOR ADDITIONAL INFORMATION
3. COMPETITION POOL REEL STORAGE AREA, POOL TARPS SHOWN DASHED
4. STANDARD ACCESSIBLE TRASH ENCLOSURE PER CITY OF RIDGECREST ENGINEER DESIGN STANDARDS PLATE NO. M-1. SEE A1.10 FOR ADDITIONAL INFORMATION
5. RAISED PEDESTRIAN CROSSWALK, SEE CIVIL DWGS. FOR ADDITIONAL INFORMATION
6. 6'-0" H. WROUGHT IRON PERIMETER FENCING. SEE 2/A1.08 FOR ADDITIONAL INFORMATION
8. 4' CONCRETE RIBBON GUTTER, SEE CIVIL DWGS. FOR ADDITIONAL INFORMATION
9. 6" CURB AND 24" GUTTER, SEE CIVIL DWGS. FOR ADDITIONAL INFORMATION
10. CONCRETE WHEEL STOP. SEE 6/A1.10 FOR ADDITIONAL INFORMATION
11. 4" THICK WHITE STRIPING, TYPICAL FOR STANDARD PARKING SPACES. SEE 8/1.10 FOR ADDITIONAL INFORMATION
12. 14'-0" X 102'-6" HSS ROOF STRUCTURE SHOWN DASHED. SEE 1/A1.04 FOR ADDITIONAL INFORMATION
13. 19' X 66' HSS TUBE STEEL SOLAR CARPORT OVHD SHOWN DASHED. POWDER COAT AND PAINT FINISH. SEE 14/A1.05 FOR ADDITIONAL INFORMATION
14. (E) AC PAVING PARKING LOT TO REMAIN. PROTECT IN PLACE
15. (E) LANDSCAPE TO REMAIN. PROTECT IN PLACE
16. (E) CONCRETE TO REMAIN. PROTECT IN PLACE
17. 18" TALL BLOCK SEATWALL W/ STUCCO FINISH. SEE LANDSCAPE DWGS FOR ADDITIONAL INFORMATION
18. HORSESHOE PIT. SEE LANDSCAPE DWGS FOR ADDITIONAL INFORMATION
19. PICNIC TABLE. OWNER FURNISHED CONTRACTOR INSTALLED
20. BENCH. OWNER FURNISHED CONTRACTOR INSTALLED
21. TRANSFORMER PAD. SEE ELECTRICAL DRAWINGS FOR ADDITIONAL INFORMATION
22. (E) CURB AND GUTTER TO REMAIN, PROTECT IN PLACE
23. 6" X 36" REMOVABLE STEEL BOLLARD POWDER COATED YELLOW BY POST GUARD @ 5'-0" O.C. SEE NOTE #3 ON 12/A1.10 FOR ADDITIONAL INFORMATION
25. FREE STANDING SCORE BOARD. SEE ELECTRICAL & POOL DRAWINGS FOR ADDITIONAL INFORMATION
26. TRUNCATED DOMES. SEE 5/A1.10 FOR ADDITIONAL INFORMATION
27. 6'-6" H. WROUGHT IRON PERIMETER FENCING. SEE 1/A1.08 FOR ADDITIONAL INFORMATION
28. 6'-0" H. WROUGHT IRON PERIMITER FENCING OVER CONCRETE RETAINING LOW WALL SHOWN SCREENED. SEE 3/A1.08 AND CIVIL DRAWINGS FOR ADDITIONAL INFORMATION
29. FIXED STEEL PEDESTRIAN BOLLARDS ALONG TRUNCATED DOMES, 7'-0" O.C MAX U.N.O. SEE DETAIL 12/A1.10 FOR ADDITIONAL INFORMATION
30. ACCESSIBLE ALL GENDER SINGLE OCCUPANCY RESTROOM AND SHOWER ROOM
31. ACCESIBLE MALE LOCKER ROOM, SHOWER ROOM AND RESTROOM FACILITIES
32. ACCESSIBLE FEMALE LOCKER ROOM, SHOWER ROOM AND RESTROOM FACILITIES
33. ACCESSIBLE ALL GENDER RESTROOM
34. (N) STANDARD ACCESSIBLE TRASH ENCLOSURE FOR (E) SENIOR CITIZENS CENTER PER CITY OF RIDGECREST ENGINEER DESIGN STANDARDS PLATE NO. M-1. SEE A1.10 FOR ADDITIONAL INFORMATION
35. ACCESSIBLE LIFT, SEE POOL DRAWINGS FOR ADDITIONAL INFORMATION
36. 2-8" WIDE ACCESSIBLE GATE. SEE 5/A1.08 FOR ADDITIONAL INFORMATION
37. DIRECTIONAL ARROW. SEE 7/A1.10 FOR ADDITIONAL INFORMATION
38. ENTRANCE WARNING SIGN. SEE 9/A1.10 FOR ADDITIONAL INFORMATION

AGENCY

FLEWELLING & MOODY
architecture planning interiors

HEADQUARTERS OFFICE:
99 S. Lake Avenue, Suite 300
Pasadena, CA 91101
Phone: 323.543.8300
E-Mail: fm-pasadena@flewelling-moody.com

ANTELOPE VALLEY OFFICE:
1035 West Lancaster Boulevard
Lancaster, California 93534
Phone: 661.949.0771
E-Mail: fm-lancaster@flewelling-moody.com

An Employee Owned Corporation

ARCHITECT

LICENSED ARCHITECT — MATT T. GABBARD — C-14211 — 08/31/2025 — STATE OF CALIFORNIA

CONSULTANT

Drawn by: Author
Check by: Checker
Revisions

No.	Date	Description
1	08/27/2025	BID ALTERNATE

All dimensions must be checked at the job by the contractor who accepts full responsibility for their accuracy under the contract. These plans & the specifications in connection therewith have been prepared for a specific site. Any and all responsibility for their use in whole or in part on any other site is hereby disclaimed by Flewelling & Moody.

CITY OF RIDGECREST

SGT. JOHN PINNEY MEMORIAL POOL REPLACEMENT PROJECT

205 S WARNER ST, RIDGECREST, CA 93555

Drawing Title

OVERALL SITE PLAN ALT 3

Job No. 3055-0100
Date 12/20/2024
Sheet No. **A1.01A3**

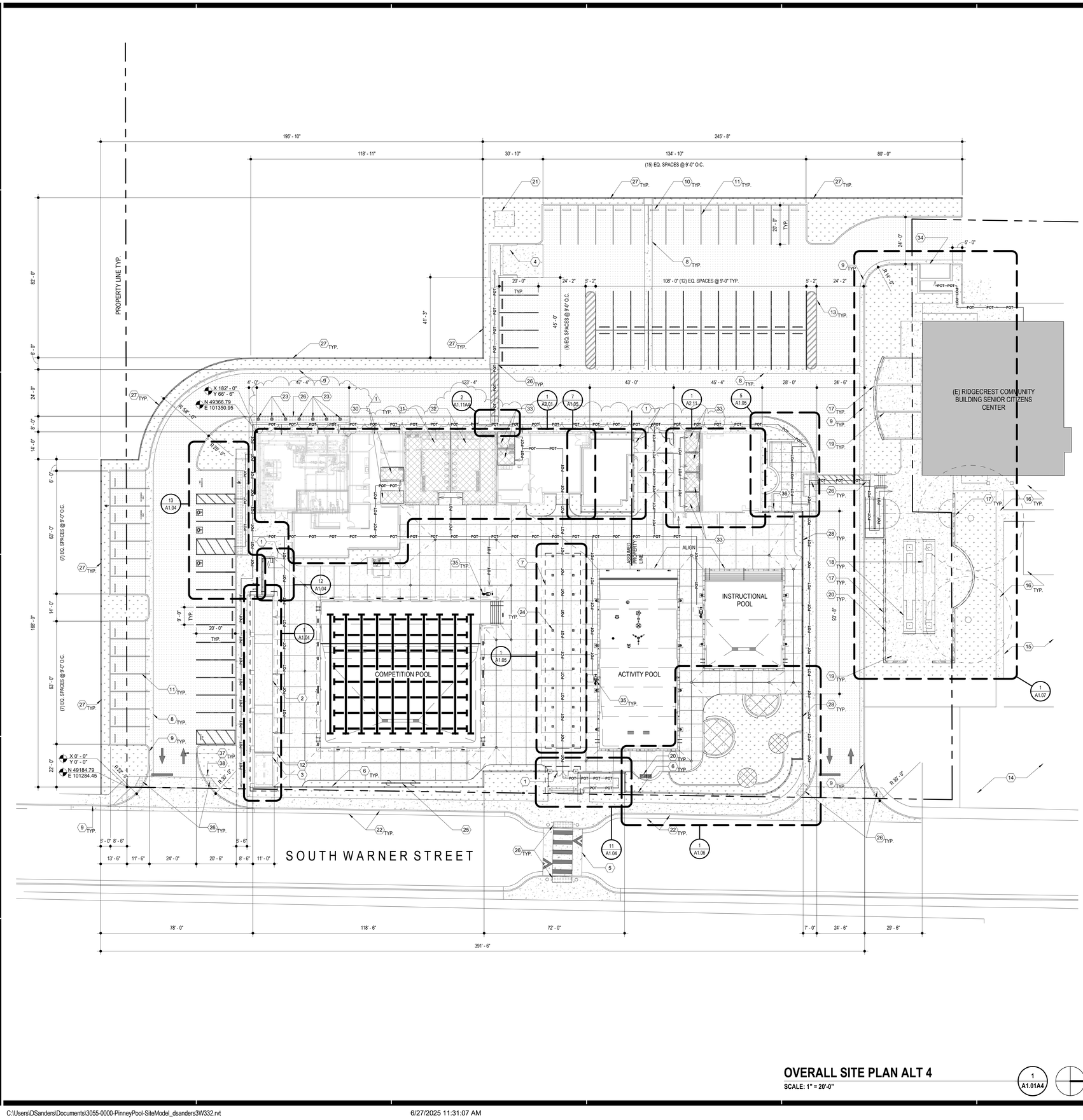

OVERALL SITE PLAN ALT 4

SCALE: 1" = 20'-0"

1 A1.01A4

GENERAL NOTES

1. REFER TO CIVIL, STRUCTURAL, PLUMBING, LOW VOLTAGE, POOL, LANDSCAPE, AND ELECTRICAL DRAWINGS FOR ADDITIONAL APPLICABLE SCOPE OF WORK.
2. CONTRACTOR SHALL VERIFY ALL CONDITIONS PRIOR TO CONSTRUCTION. ALL DISCREPANCIES SHALL BE BROUGHT TO THE ATENTION OF OWNER AND ARCHITECT PRIOR TO COMMENCING WORK.
3. PATCH AND REPAIR, OR REPLACE, ALL EXISTING ADJACENT SURFACES AND ITEMS AFFECTED BY NEW WORK. RESTORE FINISHES AND ITEMS TO MATCH EXISTING.
4. CONTRACTOR SHALL COORDINATE ALL REQUIRED SCOPE OF WORK WITH ALL TRADES TO COMMENCING WORK.
5. REFER TO POOL DRAWINGS FOR LOCATION OF COMEPETION POOL, ACTIVITY POOL, AND INSTRUCTIONAL POOL.

LEGEND

(N) LANDSCAPE

(N) CONCRETE

(N) AC PAVING

X 0' - 0" Y 0' - 0" DATUM POINT

N 0.0 E 0.0 COORDINATES BASED ON ASSUMED DATUM ON TOPOGRAPHIC SURVEY PROVIDED BY THE CITY

(N) ACCESSIBLE FACILITIES

POT ACCESSIBLE PATH OF TRAVEL

DESIGN PROFESSIONAL IN GENERAL RESPONSIBLE CHARGE STATEMENT:

PATH OF TRAVEL (P.O.T.) AS INDICATED IS A COMMON BARRIER FREE ACCESS ROUTE WITHOUT ANY ABRUPT VERTICAL CHANGES EXCEEDING 1/2" AT 1:2 MAXIMUM SLOPE, EXCEPT THAT LEVEL CHANGES DO NOT EXCEED 1/4" VERTICAL. P.O.T. IS A MINIMUM OF 48" WIDE. THE SURFACE SHALL BE FIRM, STABLE, AND SLIP RESISTANT. PASSING SPACES (11B-806.5.3) AT LEAST 60" X 60" SHALL BE LOCATED NOT MORE THAN 200' APART. PARTS OF P.O.T. WITH CONTINUOUS GRADIENTS SHALL HAVE 60" LEVEL AREAS AT INTERVALS OF 400' MAXIMUM (11B-401.1). SLOPES GREATER THAN 5% TO A MAXIMUM OF 8.33% SHALL BE CONSIDERED AS RAMP (11B405). THERE SHALL BE NO DROP-OFF OVER 4" ALONG THE EDGE OF WALK OR LANDING. P.O.T. SHALL BE MAINTAINED FREE OF OVERHANG OBSTRUCTIONS AND OBJECTS PROTRUDING GREATER THAN 4" FROM A WALL, BETWEEN 27" TO 80" ABOVE FINISHED GRADE. ARCHITECT SHALL VERIFY THAT NO BARRIERS EXIST IN THE PATH OF TRAVEL.

THE P.O.T. IDENTIFIED IN THESE CONSTRUCTION DOCUMENTS IS COMPLIANT WITH THE CURRENT APPLICABLE CALIFORNIA BUILDING CODE ACCESSIBILITY PROVISIONS FOR PATH OF TRAVEL REQUIREMENTS FOR ALTERNATIONS, ADDITIONS AND STRUCTURAL REPAIRS. AS PART OF THE DESIGN OF THIS PROJECT, THE P.O.T. WAS EXAMINED AND ANY ELEMENTS, COMPONENTS OR PORTIONS OF THE P.O.T. THAT WERE DETERMINED TO BE NONCOMPLIANT 1) HAVE BEEN IDENTIFIED AND 2) THE CORRECTIVE WORK NECESSARY TO BRING THEM INTO COMPLIANCE HAS BEEN INCLUDED WITHIN THE SCOPE OF THIS PROJECTS WORK THROUGH DETAILS, DRAWINGS AND SPECIFICATIONS INCORPERATED INTO THESE CONSTRUCTION DOCUMENTS. ANY NON COMPLIANT ELEMENTS, COMPONENTS OR PORTIONS OF THE P.O.T. THAT WILL BE NOT BE CORRECTED BY THIS PROJECT BASED ON VALUATION THRESHOLD LIMITATIONS OR A FIND OF UNREASONABLE HARDSHIP ARE SO INDICATED IN THESE CONSTRUCTION DOCUMENTS.

DURING CONSTRUCTION, IF P.O.T. ITEMS WITHIN THE SCOPE OF THE PROJECT REPRESENTED AS CODE COMPLIANT ARE FOUND TO BE NONCONFORMING BEYOND REASONABLE CONSTRUCTION TOLERANCE, THEY SHALL BE BROUGHT INTO COMPLIANCE WITH THE CBC AS A PART OF THIS PROJECT BY MEANS OF CONSTRUCTION CHANGE DOCUMENTS.

CONSTRUCTION NOTES

1. 7'-0" WIDE ACCESSIBLE GATE. SEE 6/A1.08 FOR ADDITIONAL INFORMATION
2. FLOOR ANCHORED 5 ROW BLEACHER SEATING BY NATIONAL RECREATION SYSTEMS. SEE STRUCTURAL DWGS FOR ADDITIONAL INFORMATION
3. COMPETITION POOL REEL STORAGE AREA, POOL TARPS SHOWN DASHED
4. STANDARD ACCESSIBLE TRASH ENCLOSURE PER CITY OF RIDGECREST ENGINEER DESIGN STANDARDS PLATE NO. M-1. SEE A1.10 FOR ADDITIONAL INFORMATION
5. RAISED PEDESTRIAN CROSSWALK, SEE CIVIL DWGS. FOR ADDITIONAL INFORMATION
6. 6'-0" H. WROUGHT IRON PERIMETER FENCING. SEE 2/A1.08 FOR ADDITIONAL INFORMATION
7. 18' X 100' HSS TUBE STEEL TRELLIS STRUCTURE. SEE 1/A1.05 FOR ADDITIONAL INFORMATION
8. 4' CONCRETE RIBBON GUTTER, SEE CIVIL DWGS. FOR ADDITIONAL INFORMATION
9. 6" CURB AND 24" GUTTER, SEE CIVIL DWGS. FOR ADDITIONAL INFORMATION
10. CONCRETE WHEEL STOP. SEE 6/A1.10 FOR ADDITIONAL INFORMATION
11. 4" THICK WHITE STRIPING, TYPICAL FOR STANDARD PARKING SPACES. SEE 8/1.10 FOR ADDITIONAL INFORMATION
12. 14'-0" X 102'-6" HSS ROOF STRUCTURE SHOWN DASHED. SEE 1/A1.04 FOR ADDITIONAL INFORMATION
13. 4" WIDE BLUE STRIPING
14. (E) AC PAVING PARKING LOT TO REMAIN. PROTECT IN PLACE
15. (E) LANDSCAPE TO REMAIN. PROTECT IN PLACE
16. (E) CONCRETE TO REMAIN. PROTECT IN PLACE
17. 18" TALL BLOCK SEATWALL W/ STUCCO FINISH. SEE LANDSCAPE DWGS FOR ADDITIONAL INFORMATION
18. HORSESHOE PIT. SEE LANDSCAPE DWGS FOR ADDITIONAL INFORMATION
19. PICNIC TABLE. OWNER FURNISHED CONTRACTOR INSTALLED
20. BENCH. OWNER FURNISHED CONTRACTOR INSTALLED
21. TRANSFORMER PAD. SEE ELECTRICAL DRAWINGS FOR ADDITIONAL INFORMATION
22. (E) CURB AND GUTTER TO REMAIN, PROTECT IN PLACE
23. 6" X 36" REMOVABLE STEEL BOLLARD POWDER COATED YELLOW BY POST GUARD @ 5'-0" O.C. SEE NOTE #3 ON 12/A1.10 FOR ADDITIONAL INFORMATION
24. 6" X 6" X 1/4" HSS COLUMN, TYP. SEE STRUCTURAL DRAWINGS FOR ADDITIONAL INFORMATION
25. FREE STANDING SCORE BOARD. SEE ELECTRICAL & POOL DRAWINGS FOR ADDITIONAL INFORMATION
26. TRUNCATED DOMES. SEE 5/A1.10 FOR ADDITIONAL INFORMATION
27. 6'-6" H. WROUGHT IRON PERIMETER FENCING. SEE 1/A1.08 FOR ADDITIONAL INFORMATION
28. 6'-0" H. WROUGHT IRON PERIMITER FENCING OVER CONCRETE RETAINING LOW WALL SHOWN SCREENED. SEE 3/A1.08 AND CIVIL DRAWINGS FOR ADDITIONAL INFORMATION
30. ACCESSIBLE ALL GENDER SINGLE OCCUPANCY RESTROOM AND SHOWER ROOM
31. ACCESIBLE MALE LOCKER ROOM, SHOWER ROOM AND RESTROOM FACILITIES
32. ACCESSIBLE FEMALE LOCKER ROOM, SHOWER ROOM AND RESTROOM FACILITIES
33. ACCESSIBLE ALL GENDER RESTROOM
34. (N) STANDARD ACCESSIBLE TRASH ENCLOSURE FOR (E) SENIOR CITIZENS CENTER PER CITY OF RIDGECREST ENGINEER DESIGN STANDARDS PLATE NO. M-1. SEE A1.10 FOR ADDITIONAL INFORMATION
35. ACCESSIBLE LIFT, SEE POOL DRAWINGS FOR ADDITIONAL INFORMATION
36. 2-8" WIDE ACCESSIBLE GATE. SEE 5/A1.08 FOR ADDITIONAL INFORMATION
37. DIRECTIONAL ARROW. SEE 7/A1.10 FOR ADDITIONAL INFORMATION
38. ENTRANCE WARNING SIGN. SEE 9/A1.10 FOR ADDITIONAL INFORMATION

AGENCY

FLEWELLING & MOODY
architecture planning interiors

HEADQUARTERS OFFICE:
99 S. Lake Avenue, Suite 300
Pasadena, CA 91101
Phone: 323.543.8300
E-Mail: fm-pasadena@flewelling-moody.com

ANTELOPE VALLEY OFFICE:
1035 West Lancaster Boulevard
Lancaster, California 93534
Phone: 661.949.0771
E-Mail: fm-lancaster@flewelling-moody.com

An Employee Owned Corporation

ARCHITECT

LICENSED ARCHITECT MATT T. GANO C-14211 06/30/2025 STATE OF CALIFORNIA

CONSULTANT

Drawn by: Author

Check by: Checker

Revisions

No.	Date	Description
1	08/27/2025	BID ALTERNATE

All dimensions must be checked at the job by the contractor who accepts full responsibility for their accuracy under the contract. These plans & the specifications in connection therewith have been prepared for a specific site. Any and all responsibility for their use in whole or in part on any other site is hereby disclaimed by Flewelling & Moody.

CITY OF RIDGECREST

SGT. JOHN PINNEY MEMORIAL POOL REPLACEMENT PROJECT

205 S WARNER ST, RIDGECREST, CA 93555

Drawing Title

OVERALL SITE PLAN ALT 4

Job No. 3055-0100

Date 12/20/2024

Sheet No. **A1.01A4**

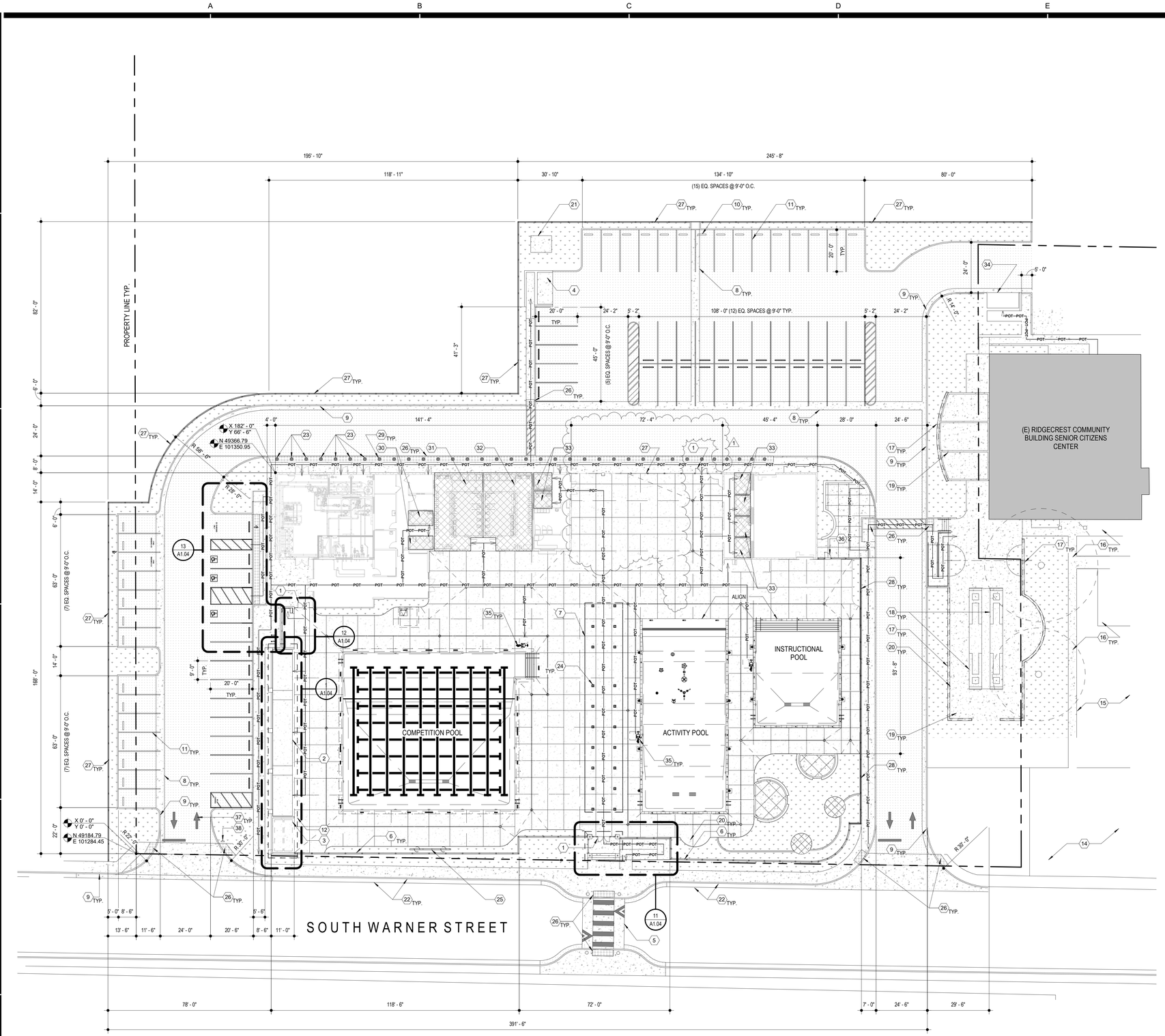

OVERALL SITE PLAN ALT 6

SCALE: 1" = 20'-0"

1 / A1.01A6

GENERAL NOTES

1. REFER TO CIVIL, STRUCTURAL, PLUMBING, LOW VOLTAGE, POOL, LANDSCAPE, AND ELECTRICAL DRAWINGS FOR ADDITIONAL APPLICABLE SCOPE OF WORK.
2. CONTRACTOR SHALL VERIFY ALL CONDITIONS PRIOR TO CONSTRUCTION. ALL DISCREPANCIES SHALL BE BROUGHT TO THE ATENTION OF OWNER AND ARCHITECT PRIOR TO COMMENCING WORK.
3. PATCH AND REPAIR, OR REPLACE, ALL EXISTING ADJACENT SURFACES AND ITEMS AFFECTED BY NEW WORK. RESTORE FINISHES AND ITEMS TO MATCH EXISTING.
4. CONTRACTOR SHALL COORDINATE ALL REQUIRED SCOPE OF WORK WITH ALL TRADES TO COMMENCING WORK.
5. REFER TO POOL DRAWINGS FOR LOCATION OF COMEPETION POOL, ACTIVITY POOL, AND INSTRUCTIONAL POOL.

LEGEND

- (N) LANDSCAPE
- (N) CONCRETE
- (N) AC PAVING
- X 0' - 0" / Y 0' - 0" — DATUM POINT
- N 0.0 / E 0.0 — COORDINATES BASED ON ASSUMED DATUM ON TOPOGRAPHIC SURVEY PROVIDED BY THE CITY
- (N) ACCESSIBLE FACILITIES
- — POT — ACCESSIBLE PATH OF TRAVEL

DESIGN PROFESSIONAL IN GENERAL RESPONSIBLE CHARGE STATEMENT:

PATH OF TRAVEL (P.O.T.) AS INDICATED IS A COMMON BARRIER FREE ACCESS ROUTE WITHOUT ANY ABRUPT VERTICAL CHANGES EXCEEDING 1/2" AT 1:2 MAXIMUM SLOPE, EXCEPT THAT LEVEL CHANGES DO NOT EXCEED 1/4" VERTICAL. P.O.T. IS A MINIMUM OF 48" WIDE. THE SURFACE SHALL BE FIRM, STABLE, AND SLIP RESISTANT. PASSING SPACES (11B-805.5.3) AT LEAST 60" X 60" SHALL BE LOCATED NOT MORE THAN 200' APART. PARTS OF P.O.T. WITH CONTINUOUS GRADIENTS SHALL HAVE 60" LEVEL AREAS AT INTERVALS OF 400' MAXIMUM (11B-401.1). SLOPES GREATER THAN 5% TO A MAXIMUM OF 8.33% SHALL BE CONSIDERED AS RAMP (11B405). THERE SHALL BE NO DROP-OFF OVER 4" ALONG THE EDGE OF WALK OR LANDING. P.O.T. SHALL BE MAINTAINED FREE OF OVERHANG OBSTRUCTIONS AND OBJECTS PROTRUDING GREATER THAN 4" FROM A WALL, BETWEEN 27" TO 80" ABOVE FINISHED GRADE. ARCHITECT SHALL VERIFY THAT NO BARRIERS EXIST IN THE PATH OF TRAVEL.

THE P.O.T. IDENTIFIED IN THESE CONSTRUCTION DOCUMENTS IS COMPLIANT WITH THE CURRENT APPLICABLE CALIFORNIA BUILDING CODE ACCESSIBILITY PROVISIONS FOR PATH OF TRAVEL REQUIREMENTS FOR ALTERNATIONS, ADDITIONS AND STRUCTURAL REPAIRS. AS PART OF THE DESIGN OF THIS PROJECT, THE P.O.T. WAS EXAMINED AND ANY ELEMENTS, COMPONENTS OR PORTIONS OF THE P.O.T. THAT WERE DETERMINED TO BE NONCOMPLIANT 1) HAVE BEEN IDENTIFIED AND 2) THE CORRECTIVE WORK NECESSARY TO BRING THEM INTO COMPLIANCE HAS BEEN INCLUDED WITHIN THE SCOPE OF THIS PROJECTS WORK THROUGH DETAILS, DRAWINGS AND SPECIFICATIONS INCORPERATED INTO THESE CONSTRUCTION DOCUMENTS. ANY NON COMPLIANT ELEMENTS, COMPONENTS OR PORTIONS OF THE P.O.T. THAT WILL BE NOT BE CORRECTED BY THIS PROJECT BASED ON VALUATION THRESHOLD LIMITATIONS OR A FIND OF UNREASONABLE HARDSHIP ARE SO INDICATED IN THESE CONSTRUCTION DOCUMENTS.

DURING CONSTRUCTION, IF P.O.T. ITEMS WITHIN THE SCOPE OF THE PROJECT REPRESENTED AS CODE COMPLIANT ARE FOUND TO BE NONCONFORMING BEYOND REASONABLE CONSTRUCTION TOLERANCE, THEY SHALL BE BROUGHT INTO COMPLIANCE WITH THE CBC AS A PART OF THIS PROJECT BY MEANS OF CONSTRUCTION CHANGE DOCUMENTS.

CONSTRUCTION NOTES

1. 7'-0" WIDE ACCESSIBLE GATE. SEE 6/A1.08 FOR ADDITIONAL INFORMATION
2. FLOOR ANCHORED 5 ROW BLEACHER SEATING BY NATIONAL RECREATION SYSTEMS. SEE STRUCTURAL DWGS FOR ADDITIONAL INFORMATION
3. COMPETITION POOL REEL STORAGE AREA, POOL TARPS SHOWN DASHED
4. STANDARD ACCESSIBLE TRASH ENCLOSURE PER CITY OF RIDGECREST ENGINEER DESIGN STANDARDS PLATE NO. M-1. SEE A1.10 FOR ADDITIONAL INFORMATION
5. RAISED PEDESTRIAN CROSSWALK, SEE CIVIL DWGS. FOR ADDITIONAL INFORMATION
6. 6'-0" H. TUBE STEEL PERIMETER FENCING. SEE 2/A1.08A6 FOR ADDITIONAL INFORMATION
7. 18' X 100' HSS TUBE STEEL TRELLIS STRUCTURE. SEE 1/A1.05A6 FOR ADDITIONAL INFORMATION
8. 4' CONCRETE RIBBON GUTTER, SEE CIVIL DWGS. FOR ADDITIONAL INFORMATION
9. 6" CURB AND 24" GUTTER, SEE CIVIL DWGS. FOR ADDITIONAL INFORMATION
10. CONCRETE WHEEL STOP. SEE 6/A1.10 FOR ADDITIONAL INFORMATION
11. 4" THICK WHITE STRIPING, TYPICAL FOR STANDARD PARKING SPACES. SEE 8/1.10 FOR ADDITIONAL INFORMATION
12. 14'-0" X 102'-6" HSS ROOF STRUCTURE SHOWN DASHED. SEE 1/A1.04 FOR ADDITIONAL INFORMATION
13. 4" WIDE BLUE STRIPING
14. (E) AC PAVING PARKING LOT TO REMAIN. PROTECT IN PLACE
15. (E) LANDSCAPE TO REMAIN. PROTECT IN PLACE
16. (E) CONCRETE TO REMAIN. PROTECT IN PLACE
17. 18" TALL BLOCK SEATWALL W/ STUCCO FINISH. SEE LANDSCAPE DWGS FOR ADDITIONAL INFORMATION
18. HORSESHOE PIT. SEE LANDSCAPE DWGS FOR ADDITIONAL INFORMATION
19. PICNIC TABLE. OWNER FURNISHED CONTRACTOR INSTALLED
20. BENCH. OWNER FURNISHED CONTRACTOR INSTALLED
21. TRANSFORMER PAD. SEE ELECTRICAL DRAWINGS FOR ADDITIONAL INFORMATION
22. (E) CURB AND GUTTER TO REMAIN, PROTECT IN PLACE
23. 6" X 36" REMOVABLE STEEL BOLLARD POWDER COATED YELLOW BY POST GUARD OR APPROVED EQUAL @ 5'-0" O.C. SEE NOTE #3 ON 12/A1.10 FOR ADDITIONAL INFORMATION
24. 6" X 6" X 1/4" HSS COLUMN, TYP. SEE STRUCTURAL DRAWINGS FOR ADDITIONAL INFORMATION
25. FREE STANDING SCORE BOARD. SEE ELECTRICAL & POOL DRAWINGS FOR ADDITIONAL INFORMATION
26. TRUNCATED DOMES. SEE 5/A1.10 FOR ADDITIONAL INFORMATION
27. 6'-6" H. TUBE STEEL PERIMETER FENCING. SEE 1/A1.08A6 FOR ADDITIONAL INFORMATION
28. 6'-0" H. TUBE STEEL PERIMITER FENCING OVER CONCRETE RETAINING LOW WALL SHOWN SCREENED. SEE 3/A1.08 AND CIVIL DRAWINGS FOR ADDITIONAL INFORMATION
29. FIXED STEEL PEDESTRIAN BOLLARDS ALONG TRUNCATED DOMES, 7'-0" O.C MAX U.N.O. SEE DETAIL 12/A1.10 FOR ADDITIONAL INFORMATION
30. ACCESSIBLE ALL GENDER SINGLE OCCUPANCY RESTROOM AND SHOWER ROOM
31. ACCESIBLE MALE LOCKER ROOM, SHOWER ROOM AND RESTROOM FACILITIES
32. ACCESSIBLE FEMALE LOCKER ROOM, SHOWER ROOM AND RESTROOM FACILITIES
33. ACCESSIBLE ALL GENDER RESTROOM
34. (N) STANDARD ACCESSIBLE TRASH ENCLOSURE FOR (E) SENIOR CITIZENS CENTER PER CITY OF RIDGECREST ENGINEER DESIGN STANDARDS PLATE NO. M-1. SEE A1.10 FOR ADDITIONAL INFORMATION
35. ACCESSIBLE LIFT, SEE POOL DRAWINGS FOR ADDITIONAL INFORMATION
36. 2-8" WIDE ACCESSIBLE GATE. SEE 5/A1.08A6 FOR ADDITIONAL INFORMATION
37. DIRECTIONAL ARROW. SEE 7/A1.10 FOR ADDITIONAL INFORMATION
38. ENTRANCE WARNING SIGN. SEE 9/A1.10 FOR ADDITIONAL INFORMATION

AGENCY

FLEWELLING & MOODY
architecture planning interiors

HEADQUARTERS OFFICE:
99 S. Lake Avenue, Suite 300
Pasadena, CA 91101
Phone: 323.543.8300
E-Mail: fm-pasadena@flewelling-moody.com

ANTELOPE VALLEY OFFICE:
1035 West Lancaster Boulevard
Lancaster, California 93534
Phone: 661.949.0771
E-Mail: fm-lancaster@flewelling-moody.com

An Employee Owned Corporation

ARCHITECT

LICENSED ARCHITECT — MATT T. GABBERT — C-14211 — 08/31/2025 — STATE OF CALIFORNIA

CONSULTANT

Drawn by: Author
Check by: Checker
Revisions

No.	Date	Description
1	08/27/2025	BID ALTERNATE

All dimensions must be checked at the job by the contractor who accepts full responsibility for their accuracy under the contract. These plans & the specifications in connection therewith have been prepared for a specific site. Any and all responsibility for their use in whole or in part on any other site is hereby disclaimed by Flewelling & Moody.

CITY OF RIDGECREST

SGT. JOHN PINNEY MEMORIAL POOL REPLACEMENT PROJECT

205 S WARNER ST, RIDGECREST, CA 93555

Drawing Title

OVERALL SITE PLAN ALT 6

Job No. 3055-0100
Date 12/20/2024
Sheet No. **A1.01A6**

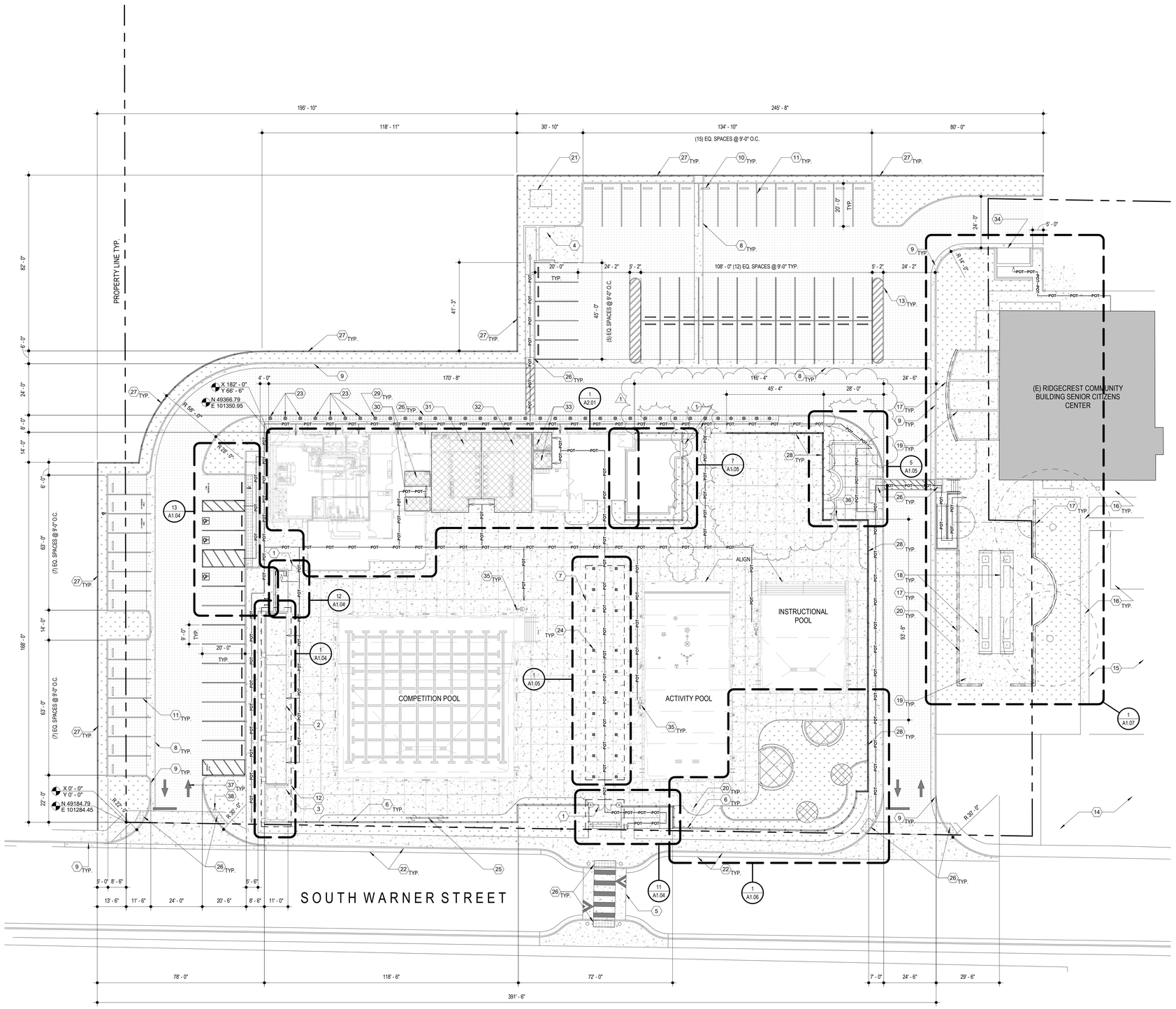

OVERALL SITE PLAN ALT 7

SCALE: 1" = 20'-0"

1 A1.01A7

GENERAL NOTES

1. REFER TO CIVIL, STRUCTURAL, PLUMBING, LOW VOLTAGE, POOL, LANDSCAPE, AND ELECTRICAL DRAWINGS FOR ADDITIONAL APPLICABLE SCOPE OF WORK.
2. CONTRACTOR SHALL VERIFY ALL CONDITIONS PRIOR TO CONSTRUCTION. ALL DISCREPANCIES SHALL BE BROUGHT TO THE ATENTION OF OWNER AND ARCHITECT PRIOR TO COMMENCING WORK.
3. PATCH AND REPAIR, OR REPLACE, ALL EXISTING ADJACENT SURFACES AND ITEMS AFFECTED BY NEW WORK. RESTORE FINISHES AND ITEMS TO MATCH EXISTING.
4. CONTRACTOR SHALL COORDINATE ALL REQUIRED SCOPE OF WORK WITH ALL TRADES TO COMMENCING WORK.
5. REFER TO POOL DRAWINGS FOR LOCATION OF COMEPETION POOL, ACTIVITY POOL, AND INSTRUCTIONAL POOL.

LEGEND

- (N) LANDSCAPE
- (N) CONCRETE
- (N) AC PAVING
- X 0' - 0" Y 0' - 0" — DATUM POINT
- N 0.0 E 0.0 — COORDINATES BASED ON ASSUMED DATUM ON TOPOGRAPHIC SURVEY PROVIDED BY THE CITY
- (N) ACCESSIBLE FACILITIES
- POT — ACCESSIBLE PATH OF TRAVEL

DESIGN PROFESSIONAL IN GENERAL RESPONSIBLE CHARGE STATEMENT:

PATH OF TRAVEL (P.O.T.) AS INDICATED IS A COMMON BARRIER FREE ACCESS ROUTE WITHOUT ANY ABRUPT VERTICAL CHANGES EXCEEDING 1/2" AT 1:2 MAXIMUM SLOPE, EXCEPT THAT LEVEL CHANGES DO NOT EXCEED 1/4" VERTICAL. P.O.T. IS A MINIMUM OF 48" WIDE. THE SURFACE SHALL BE FIRM, STABLE, AND SLIP RESISTANT. PASSING SPACES (11B-805.5.3) AT LEAST 60" X 60" SHALL BE LOCATED NOT MORE THAN 200' APART. PARTS OF P.O.T. WITH CONTINUOUS GRADIENTS SHALL HAVE 60" LEVEL AREAS AT INTERVALS OF 400' MAXIMUM (11B-401.1). SLOPES GREATER THAN 5% TO A MAXIMUM OF 8.33% SHALL BE CONSIDERED AS RAMP (11B405). THERE SHALL BE NO DROP-OFF OVER 4" ALONG THE EDGE OF WALK OR LANDING. P.O.T. SHALL BE MAINTAINED FREE OF OVERHANG OBSTRUCTIONS AND OBJECTS PROTRUDING GREATER THAN 4" FROM A WALL, BETWEEN 27" TO 80" ABOVE FINISHED GRADE. ARCHITECT SHALL VERIFY THAT NO BARRIERS EXIST IN THE PATH OF TRAVEL.

THE P.O.T. IDENTIFIED IN THESE CONSTRUCTION DOCUMENTS IS COMPLIANT WITH THE CURRENT APPLICABLE CALIFORNIA BUILDING CODE ACCESSIBILITY PROVISIONS FOR PATH OF TRAVEL REQUIREMENTS FOR ALTERNATIONS, ADDITIONS AND STRUCTURAL REPAIRS. AS PART OF THE DESIGN OF THIS PROJECT, THE P.O.T. WAS EXAMINED AND ANY ELEMENTS, COMPONENTS OR PORTIONS OF THE P.O.T. THAT WERE DETERMINED TO BE NONCOMPLIANT 1) HAVE BEEN IDENTIFIED AND 2) THE CORRECTIVE WORK NECCESSARY TO BRING THEM INTO COMPLIANCE HAS BEEN INCLUDED WITHIN THE SCOPE OF THIS PROJECTS WORK THROUGH DETAILS, DRAWINGS AND SPECIFICATIONS INCORPERATED INTO THESE CONSTRUCTION DOCUMENTS. ANY NON COMPLIANT ELEMENTS, COMPONENTS OR PORTIONS OF THE P.O.T. THAT WILL BE NOT BE CORRECTED BY THIS PROJECT BASED ON VALUATION THRESHOLD LIMITATIONS OR A FIND OF UNREASONABLE HARDSHIP ARE SO INDICATED IN THESE CONSTRUCTION DOCUMENTS.

DURING CONSTRUCTION, IF P.O.T. ITEMS WITHIN THE SCOPE OF THE PROJECT REPRESENTED AS CODE COMPLIANT ARE FOUND TO BE NONCONFORMING BEYOND REASONABLE CONSTRUCTION TOLERANCE, THEY SHALL BE BROUGHT INTO COMPLIANCE WITH THE CBC AS A PART OF THIS PROJECT BY MEANS OF CONSTRUCTION CHANGE DOCUMENTS.

CONSTRUCTION NOTES

1. 7'-0" WIDE ACCESSIBLE GATE. SEE 6/A1.08 FOR ADDITIONAL INFORMATION
2. FLOOR ANCHORED 5 ROW BLEACHER SEATING BY NATIONAL RECREATION SYSTEMS. SEE STRUCTURAL DWGS FOR ADDITIONAL INFORMATION
3. COMPETITION POOL REEL STORAGE AREA, POOL TARPS SHOWN DASHED
4. STANDARD ACCESSIBLE TRASH ENCLOSURE PER CITY OF RIDGECREST ENGINEER DESIGN STANDARDS PLATE NO. M-1. SEE A1.10 FOR ADDITIONAL INFORMATION
5. RAISED PEDESTRIAN CROSSWALK, SEE CIVIL DWGS. FOR ADDITIONAL INFORMATION
6. 6'-0" H. TUBE STEEL PERIMETER FENCING. SEE 2/A1.08 FOR ADDITIONAL INFORMATION
7. 18' X 100' HSS TUBE STEEL TRELLIS STRUCTURE. SEE 1/A1.05 FOR ADDITIONAL INFORMATION
8. 4" CONCRETE RIBBON GUTTER, SEE CIVIL DWGS. FOR ADDITIONAL INFORMATION
9. 6" CURB AND 24" GUTTER, SEE CIVIL DWGS. FOR ADDITIONAL INFORMATION
10. CONCRETE WHEEL STOP. SEE 6/A1.10 FOR ADDITIONAL INFORMATION
11. 4" THICK WHITE STRIPING, TYPICAL FOR STANDARD PARKING SPACES. SEE 8/1.10 FOR ADDITIONAL INFORMATION
12. 14'-0" X 102'-6" HSS ROOF STRUCTURE SHOWN DASHED. SEE 1/A1.04 FOR ADDITIONAL INFORMATION
13. 4" WIDE BLUE STRIPING
14. (E) AC PAVING PARKING LOT TO REMAIN. PROTECT IN PLACE
15. (E) LANDSCAPE TO REMAIN. PROTECT IN PLACE
16. (E) CONCRETE TO REMAIN. PROTECT IN PLACE
17. 18" TALL BLOCK SEATWALL W/ STUCCO FINISH. SEE LANDSCAPE DWGS FOR ADDITIONAL INFORMATION
18. HORSESHOE PIT. SEE LANDSCAPE DWGS FOR ADDITIONAL INFORMATION
19. PICNIC TABLE. OWNER FURNISHED CONTRACTOR INSTALLED
20. BENCH. OWNER FURNISHED CONTRACTOR INSTALLED
21. TRANSFORMER PAD. SEE ELECTRICAL DRAWINGS FOR ADDITIONAL INFORMATION
22. (E) CURB AND GUTTER TO REMAIN, PROTECT IN PLACE
23. 6" X 36" REMOVABLE STEEL BOLLARD POWDER COATED YELLOW BY POST GUARD OR APPROVED EQUAL @ 5'-0" O.C. SEE NOTE #3 ON 12/A1.10 FOR ADDITIONAL INFORMATION
24. 6" X 6" X 1/4" HSS COLUMN, TYP. SEE STRUCTURAL DRAWINGS FOR ADDITIONAL INFORMATION
25. FREE STANDING SCORE BOARD. SEE ELECTRICAL & POOL DRAWINGS FOR ADDITIONAL INFORMATION
26. TRUNCATED DOMES. SEE 5/A1.10 FOR ADDITIONAL INFORMATION
27. 6'-6" H. TUBE STEEL PERIMETER FENCING. SEE 1/A1.08 FOR ADDITIONAL INFORMATION
28. 6'-0" H. TUBE STEEL PERIMITER FENCING OVER CONCRETE RETAINING LOW WALL SHOWN SCREENED. SEE 3/A1.08 AND CIVIL DRAWINGS FOR ADDITIONAL INFORMATION
29. FIXED STEEL PEDESTRIAN BOLLARDS ALONG TRUNCATED DOMES, 7'-0" O.C MAX U.N.O. SEE DETAIL 12/A1.10 FOR ADDITIONAL INFORMATION
30. ACCESSIBLE ALL GENDER SINGLE OCCUPANCY RESTROOM AND SHOWER ROOM
31. ACCESIBLE MALE LOCKER ROOM, SHOWER ROOM AND RESTROOM FACILITIES
32. ACCESSIBLE FEMALE LOCKER ROOM, SHOWER ROOM AND RESTROOM FACILITIES
33. ACCESSIBLE ALL GENDER RESTROOM
34. (N) STANDARD ACCESSIBLE TRASH ENCLOSURE FOR (E) SENIOR CITIZENS CENTER PER CITY OF RIDGECREST ENGINEER DESIGN STANDARDS PLATE NO. M-1. SEE A1.10 FOR ADDITIONAL INFORMATION
35. ACCESSIBLE LIFT, SEE POOL DRAWINGS FOR ADDITIONAL INFORMATION
36. 2-8" WIDE ACCESSIBLE GATE. SEE 5/A1.08 FOR ADDITIONAL INFORMATION
37. DIRECTIONAL ARROW. SEE 7/A1.10 FOR ADDITIONAL INFORMATION
38. ENTRANCE WARNING SIGN. SEE 9/A1.10 FOR ADDITIONAL INFORMATION

AGENCY

FLEWELLING & MOODY
architecture planning interiors

HEADQUARTERS OFFICE:
99 S. Lake Avenue, Suite 300
Pasadena, CA 91101
Phone: 323.543.8300
E-Mail: fm-pasadena@flewelling-moody.com

ANTELOPE VALLEY OFFICE:
1035 West Lancaster Boulevard
Lancaster, California 93534
Phone: 661.949.0771
E-Mail: fm-lancaster@flewelling-moody.com

An Employee Owned Corporation

ARCHITECT

LICENSED ARCHITECT — MATT T. GABBERT — C-14211 — 08/31/2025 — STATE OF CALIFORNIA

CONSULTANT

Drawn by: Author
Check by: Checker
Revisions

No.	Date	Description
1	08/27/2025	BID ALTERNATE

All dimensions must be checked at the job by the contractor who accepts full responsibility for their accuracy under the contract. These plans & the specifications in connection therewith have been prepared for a specific site. Any and all responsibility for their use in whole or in part on any other site is hereby disclaimed by Flewelling & Moody.

CITY OF RIDGECREST

SGT. JOHN PINNEY MEMORIAL POOL REPLACEMENT PROJECT

205 S WARNER ST, RIDGECREST, CA 93555

Drawing Title

OVERALL SITE PLAN ALT 7

Job No. 3055-0100
Date 12/20/2024
Sheet No. **A1.01A7**

LEGEND

STORAGE GROUP S-2 | (E) BUILDING | BUSINESS GROUP B | (N) AC PAVING

101 GATE TAG | (N) CONCRETE | ASSEMBLY GROUP A-3 | (N) LANDSCAPING

TRAVEL DISTANCE= 100'-00"	(MAX.= 200)
COMMON PATH= 200'-00"	(MAX.= 200)

EGRESS TRAVEL DISTANCE INFORMATION

Name	
CLASS	XX OCC.
150 SF	XX SF/OCC.

OCCUPANCY LOAD INFORMATION

PATH OF EGRESS

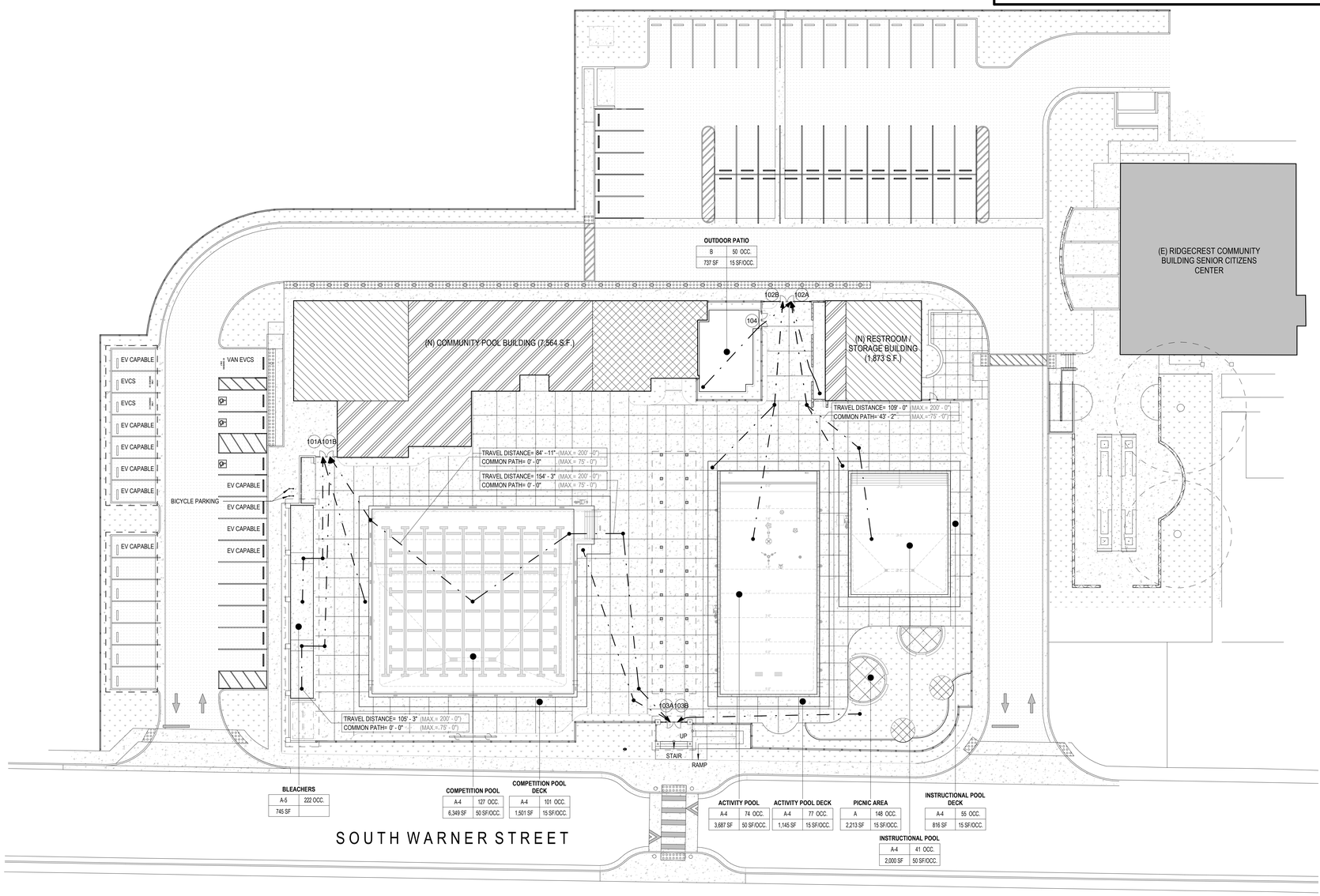

GENERAL NOTES

1. REFER TO CIVIL, STRUCTURAL, PLUMBING, LOW VOLTAGE, POOL, LANDSCAPE, AND ELECTRICAL DRAWINGS FOR ADDITIONAL APPLICABLE SCOPE OF WORK.

PARKING TABULATION

STANDARD STALL	REQUIRED ACCESS STALL			PROVIDED ACCESS STALL			TOTAL ACCESS STALL
	CAR	VAN	TOTAL REQ'D	CAR	VAN	TOTAL REQ'D	
68	3	1	4	3	1	4	72

STANDARD STALL	REQUIRED EV CAPABLE STALL (EVCS)	REQUIRED EVCS STALL (PROVIDED WITH EVSE*)	PROVIDED EV CAPABLE STALL	REQUIRED EVCS STALL (PROVIDED WITH EVSE*)	* ELECTRIC VEHICLE SUPPLY EQUIPMENT
72	13	3	13	3	

TOTAL EVCS STALL	REQUIRED EVCS ACCESS STALL			PROVIDED EVCS ACCESS STALL			TOTAL EVCS ACCESS STALL
	CAR	VAN	TOTAL REQ'D	CAR	VAN	TOTAL REQ'D	
3	0	1	1	0	1	1	1

CODE ANALYSIS

I. **BUILDING INFORMATION :**

A. **COMMUNITY BUILDING :**

1. **CONSTRUCTION TYPE :**
   a. TYPE V-B
2. **OCCUPANCY TYPE - MIXED OCCUPANCY :**
   a. *MAIN OCCUPANCY:*
      - BUSINESS GROUP B
   b. *ACCESSORY / ANCILLARY OCCUPANY :*
      - ASSEMBLY GROUP A-3
      - STORAGE GROUP S-2
3. **ALLOWABLE AREA :**
   a. *BUSINESS GROUP B*.....36,000 FT²
      - CURRENT.....4,035 FT²
   b. *ASSEMBLY GROUP A-3*.....24,000 FT²
      - CURRENT.....1,573 FT²
   c. *STORAGE GROUP S-2*.....36,000 FT²
      - CURRENT.....1,956 FT²

PER 2022 CBC SEPERATED MIXED USE OCCUPANCY
SECTION 508.4.2 ALLOWABLE BUILDING AREA : *THE BUILDING AREA SHALL BE SUCH THAT THE SUM OF THE RATIOS OF THE ATUAL BUILDING AREA OF EACH SEPERATED OCCUPANCY DIVIDED BY THE ALLOWABLE BUILDING AREA OF EACH SPERATED OCCUPANCY SHALL NOT EXCEED 1.*

GROUP B.....4,035 FT² / 36,000 FT² = 0.11
GROUP A-3.....1,573 FT² / 24,000 FT² = 0.07
GROUP S-2.....1,956 FT² / 36,000 FT² = + 0.05
0.23

0.23 < 1 THERFORE COMMUNITY BUILDING IS COMPLIANT.

4. **NUMBER OF STORIES / BUILDING HEIGHT :**
   a. *(1) STORY / 21' - 0"*

OCCUPANT LOAD ANALYSIS

NAME	OCCUPANCY	FUNCTION OF SPACE	AREA	AREA TYPE	LOAD FACTOR	OCCUPANT LOAD REAL
OUTDOOR PATIO	B	ASSEMBLY (UNCONCENTRATED)	737 SF	NET AREA	15	50
PICNIC AREA	A	ASSEMBLY (UNCONCENTRATED)	2213 SF	NET AREA	15	148
BLEACHERS	A-5	ASSEMBLY WITH FIXED SEATS	745 SF	NA	0	222
ACTIVITY POOL	A-4	SWIMMING POOL	3687 SF	GROSS AREA	50	74
ALL GENDER RESTROOMS	B	SWIMMING POOL	334 SF	GROSS AREA	50	8
COMPETITION POOL	A-4	SWIMMING POOL	6349 SF	GROSS AREA	50	127
INSTRUCTIONAL POOL	A-4	SWIMMING POOL	2000 SF	GROSS AREA	50	41
ACTIVITY POOL DECK	A-4	SWIMMING POOL DECKS	1145 SF	GROSS AREA	15	77
COMPETITION POOL DECK	A-4	SWIMMING POOL DECKS	1501 SF	GROSS AREA	15	101
INSTRUCTIONAL POOL DECK	A-4	SWIMMING POOL DECKS	816 SF	GROSS AREA	15	55
TOTAL OCCUPANT LOAD						903

INTERIOR EGRESS DOOR ANALYSIS

DOOR TAG NUMBER	DOOR WIDTH PER OCCUPANT	NUMBER OF OCCUPANTS USING EXIT DOOR	EGRESS WIDTH REQUIRED (INCHES)	DOOR WIDTH PROVIDED
104	0.15"	50	8"	30"

CUMULATIVE EGRESS DOOR ANALYSIS

DOOR TAG NUMBER	DOOR WIDTH PER OCCUPANT	NUMBER OF OCCUPANTS USING EXIT DOOR	EGRESS WIDTH REQUIRED (INCHES)	DOOR WIDTH PROVIDED
101A	0.15"	162	24"	30"
101B	0.15"	174	26"	30"
102A	0.15"	154	23"	30"
102B	0.15"	151	23"	30"
103A	0.15"	114	17"	30"
103B	0.15"	148	22"	30"
TOTAL OCCUPANTS		903		

EGRESS STAIR & RAMP ANALYSIS

Name	EXIT CAPACITY FACTOR (INCHES / PERSON)	NUMBER OF OCCUPANTS USING STAIRS	EGRESS WIDTH REQUIRED (INCHES)	TOTAL EGRESS WIDTH PROVIDED (INCHES0
STAIR	0.2	263	52.6	135
RAMP	0.2	263	52.6	60

LIFE SAFETY SITE PLAN

SCALE: 1" = 20'-0"

1 / A1.02

N

AGENCY

REVIEWED FOR CODE COMPLIANCE BY: WILLDAN ENGINEERING

Approval of these plans & specifications shall not be construed to be a permit for, or an approval of any violation of any Federal, State, County or City laws or ordinances. One set of approved plans must be kept on the job until completion.

9:23:39 AM Jul 21, 2025

FLEWELLING & MOODY
architecture planning interiors

HEADQUARTERS OFFICE:
99 S. Lake Avenue, Suite 300
Pasadena, CA 91101
Phone: 323.543.8300
E-Mail: fm-pasadena@flewelling-moody.com

ANTELOPE VALLEY OFFICE:
1035 West Lancaster Boulevard
Lancaster, California 93534
Phone: 661.949.0771
E-Mail: fm-lancaster@flewelling-moody.com

An Employee Owned Corporation

ARCHITECT

LICENSED ARCHITECT — SCOTT T. GABBARD — C-14211 — 06/30/2025 — STATE OF CALIFORNIA

CONSULTANT

Drawn by: Author
Check by: Checker

Revisions

No.	Date	Description

All dimensions must be checked at the job by the contractor who accepts full responsibility for their accuracy under the contract. These plans & the specifications in connection therewith have been prepared for a specific site. Any and all responsibility for their use in whole or in part on any other site is hereby disclaimed by Flewelling & Moody.

CITY OF RIDGECREST

SGT. JOHN PINNEY MEMORIAL POOL REPLACEMENT PROJECT

205 S WARNER ST, RIDGECREST, CA 93555

Drawing Title

LIFE SAFTEY SITE PLAN

Job No. 3055-0100

Sheet No. **A1.02**

Date 07/14/2025

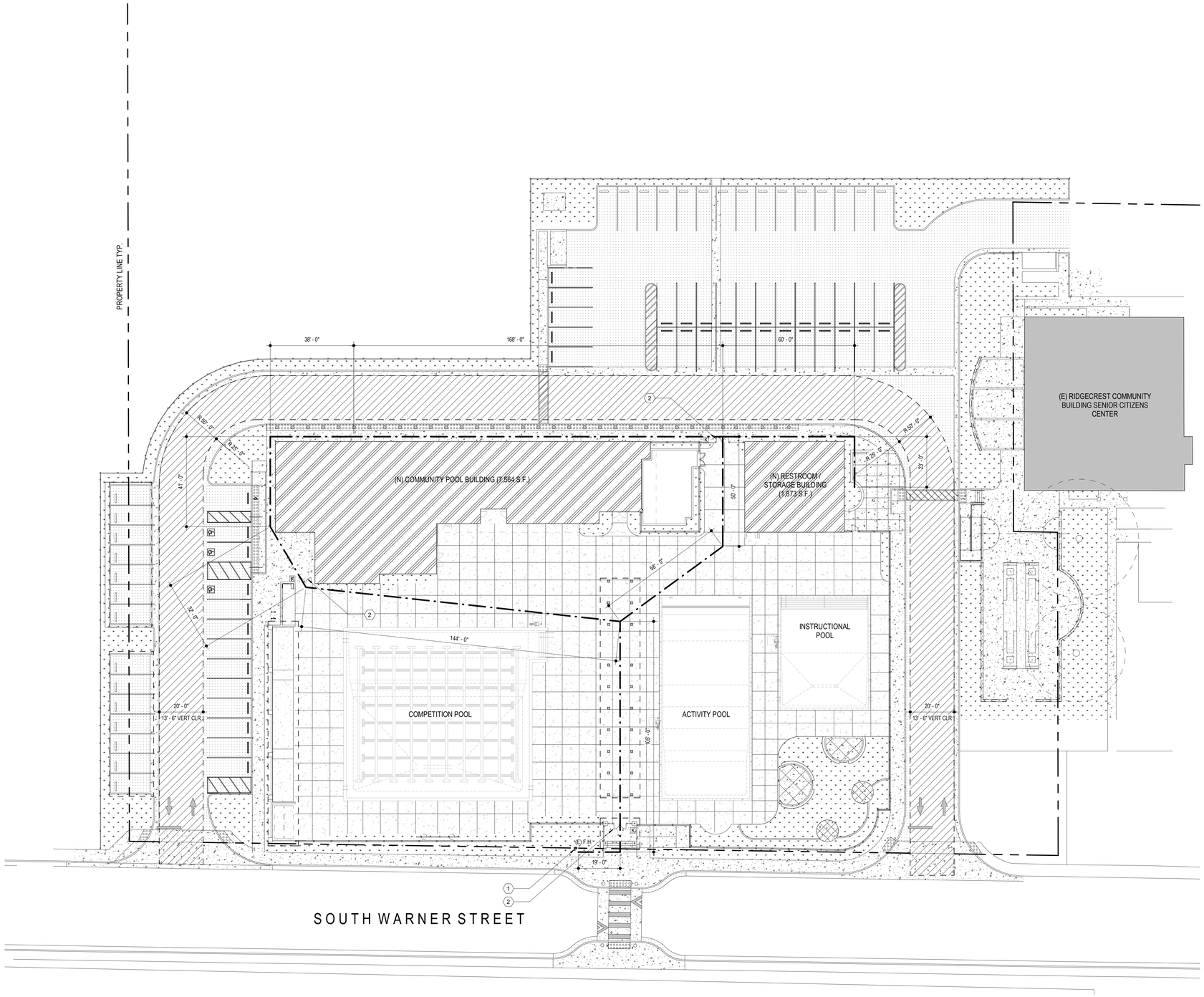

FIRE ACCESS SITE PLAN

SCALE: 1" = 20'-0"

1
A1.03

N

GENERAL NOTES

1. REFER TO CIVIL AND FIRE PROTECTION DRAWINGS FOR ADDITIONAL APPLICABLE SCOPE OF WORK.

2. CONTRACTOR SHALL VERIFY ALL CONDITIONS PRIOR TO CONSTRUCTION. ALL DISCREPANCIES SHALL BE BROUGHT TO THE ATTENTION OF OWNER AND ARCHITECT PRIOR TO COMMENCING WORK.

LEGEND

EXISTING BUILDING	NEW CONCRETE PAVING
FIRE ACCESS LANE	NEW AC PAVING
NEW BUILDING	NEW LANDSCAPE
FIRE HOSE DRAG	K NEW KNOX BOX
	(E) F.H. EXISTING FIRE HYDRANT

KEY NOTES

1. (E) FIRE HYDRANT
2. 6'-0" WIDE ACCESSIBLE GATE

FIRE FLOW TEST

Office of the Fire Marshal
Kern County Fire Department Fire Prevention Unit

2820 M St. • Bakersfield, CA 93301 • www.kerncountyfire.org
Telephone 661-391-3310 • FAX 661-636-0466/67 • TTY Relay 800-735-2929

KERN COUNTY FIRE DEPT.

To: Ron Strand Date: 1/24/24

From: Fire Prevention Phone: 661-391-3310

Hydrant Flow Test: 205 Warner St.

A flow test has been performed with the following results:

Static: 59

Residual: 52

GPM: 981

Flow Test is good for 6 months from test date

AGENCY

REVIEWED FOR CODE COMPLIANCE BY: WILLDAN ENGINEERING

Approval of these plans & specifications shall not be construed to be a permit for, or an approval of any violation of any Federal, State, County or City laws or ordinances. One set of approved plans must be kept on the job until completion.

9:23:40 AM Jul 21, 2025

FLEWELLING & MOODY
architecture planning interiors

HEADQUARTERS OFFICE:
99 S. Lake Avenue, Suite 300
Pasadena, CA 91101
Phone: 323.543.8300
E-Mail: fm-pasadena@flewelling-moody.com

ANTELOPE VALLEY OFFICE:
1035 West Lancaster Bouldvard
Lancaster, California 93534
Phone: 661.949.0771
E-Mail: fm-lancaster@flewelling-moody.com

An Employee Owned Corporation

ARCHITECT

LICENSED ARCHITECT
C-1421
STATE OF CALIFORNIA

CONSULTANT

Drawn by: Author

Check by: Checker

Revisions

No.	Date	Description

All dimensions must be checked at the job by the contractor who accepts full responsibility for their accuracy under the contract. These plans & the specifications in connection therewith have been prepared for a specific site. Any and all responsibility for their use in whole or in part on any other site is hereby disclaimed by Flewelling & Moody.

CITY OF RIDGECREST

SGT. JOHN PINNEY MEMORIAL POOL REPLACEMENT PROJECT

205 S WARNER ST, RIDGECREST, CA 93555

Drawing Title

FIRE ACCESS SITE PLAN

Job No. 3055-0100

Date 07/14/2025

Sheet No. A1.03

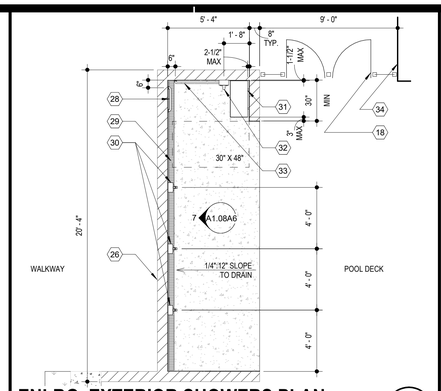

ENLRG. EXTERIOR SHOWERS PLAN

SCALE: 1/4" = 1'-0"

12 A1.04

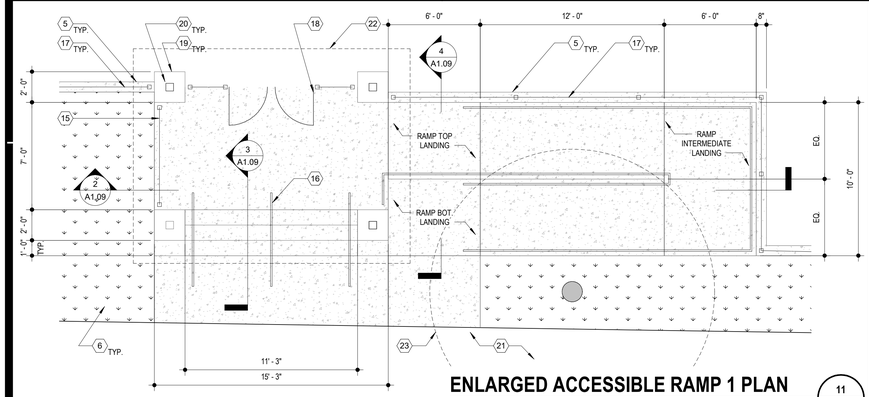

ENLARGED ACCESSIBLE RAMP 1 PLAN

SCALE: 1/4" = 1'-0"

11 A1.04

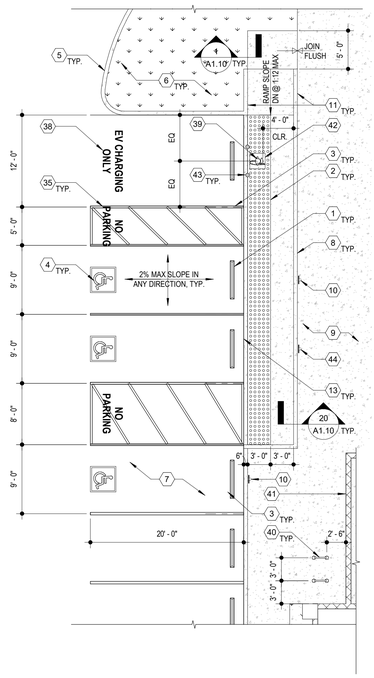

ENLARGED ACCESSIBLE PARKING PLAN

SCALE: 1/8" = 1'-0"

13 A1.04

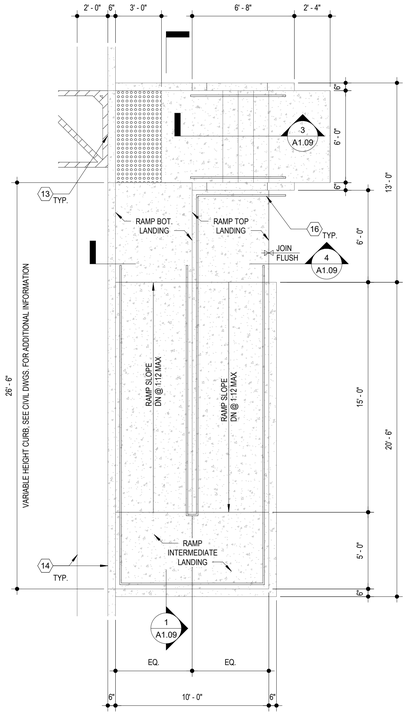

ENLARGED ACCESSIBLE RAMP 2 PLAN

SCALE: 1/4" = 1'-0"

9 A1.04

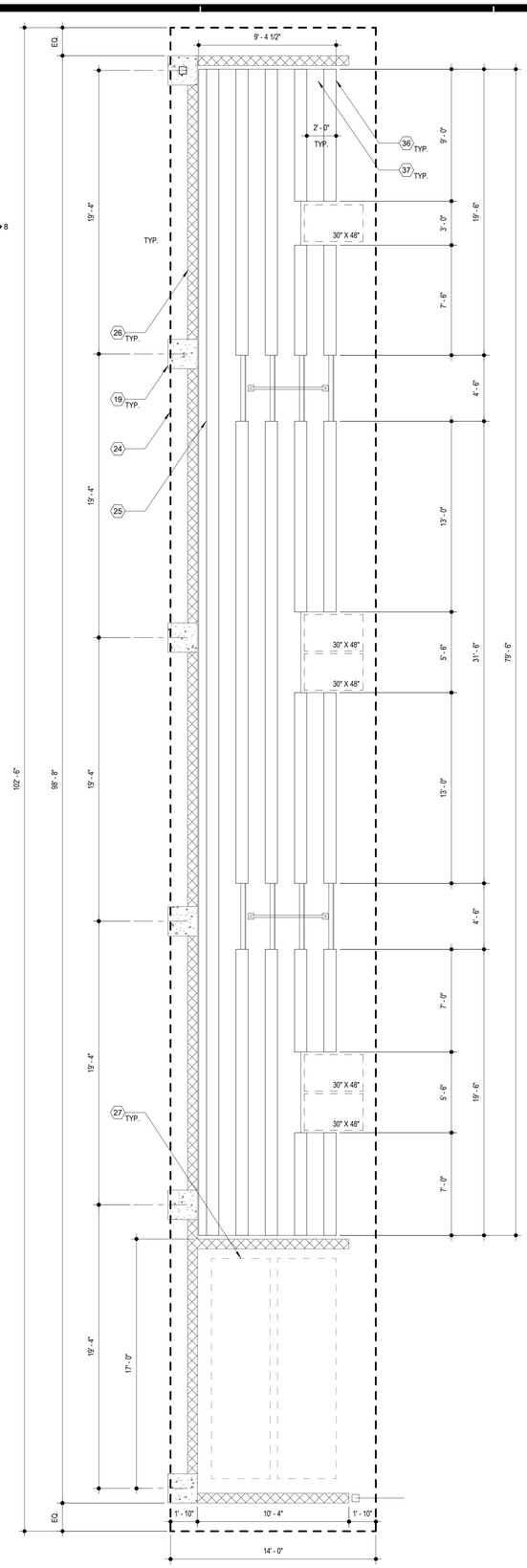

ENLARGED PERIMETER WALL & BLEACHER SEATING PLAN

SCALE: 1/4" = 1'-0"

1 A1.04

GENERAL NOTES

1. REFER TO CIVIL, STRUCTURAL, PLUMBING, LOW VOLTAGE, POOL, LANDSCAPE, AND ELECTRICAL DRAWINGS FOR ADDITIONAL APPLICABLE SCOPE OF WORK.
2. CONTRACTOR SHALL VERIFY ALL CONDITIONS PRIOR TO CONSTRUCTION. ALL DISCREPANCIES SHALL BE BROUGHT TO THE ATENTION OF OWNER AND ARCHITECT PRIOR TO COMMENCING WORK.
3. PATCH AND REPAIR, OR REPLACE, ALL EXISTING ADJACENT SURFACES AND ITEMS AFFECTED BY NEW WORK. RESTORE FINISHES AND ITEMS TO MATCH EXISTING.
4. CONTRACTOR SHALL COORDINATE ALL REQUIRED SCOPE OF WORK WITH ALL TRADES TO COMMENCING WORK.
5. REFER TO POOL DRAWINGS FOR LOCATION OF COMEPETION POOL, ACTIVITY POOL, AND INSTRUCTIONAL POOL.

LEGEND

- (N) LANDSCAPE
- (N) CONCRETE
- TRUNCATED DOMES
- CMU WALL

CONSTRUCTION NOTES

1. CONCTRETE WHEEL STOP. SEE 6/A1.10 FOR ADDITIONAL INFORMATION
2. TRUNCATED DOMES. SEE 5/A1.10 FOR ADDITIONAL INFORMATION
3. 4" THICK BLUE STRIPING SHOWN HATCHED. TYPICAL FOR ACCESSIBLE PARKING SPACES
4. ACCESSIBLE PARKING SYMBOL. SEE 4/A1.10 FOR ADDITIONAL INFORMATION
5. 6" CONCRETE CURB. SEE CIVIL DRAWINGS FOR ADDITIONAL INFORMATION
6. LANDSCAPE PLANTING. SEE LANDSCAPE DRAWINGS FOR ADDITIONAL INFORMATION
7. AC PAVING THROUGHOUT
8. 4" CURB. SEE CIVIL DRAWINGS FOR ADDITIONAL INFORMATION
9. CONCRETE WALKWAY. SEE CIVIL DRAWINGS FOR ADDITIONAL INFORMATION
10. ACCESSIBLE PARKING SIGN. SEE 10/A1.10 FOR ADDITIONAL INFORMATION
11. VARIBLE HEIGHT CURB. SEE CIVIL DRAWINGS FOR ADDITIONAL INFORMATION
12. 4" THICK BLUE STRIPING SHOWN HATCHED
13. FLUSH TRANSITION BETWEEN DRIVEWAY AND PEDESTRIAN WALKWAY
14. 6" CURB AND 24" GUTTER. SEE CIVIL DRAWINGS FOR ADDITIONAL INFORMATION
15. WROUGHT IRON PERIMETER FENCING. SEE 1/A1.08 FOR ADDITIONAL INFORMATION
16. 1-1/4" DIAMETER GALVANIZED STANDARD PIPE HANDRAIL
17. WROUGHT IRON PERIMETER FENCING. SEE 2/A1.08 FOR ADDITIONAL INFORMATION
18. 7'-0" WIDE ACCESSIBLE GATE. SEE 6/A1.08 FOR ADDITIONAL INFORMATION
19. 24" X 24" CONCRETE PILASTER. SEE 8/A1.09 AND STRUCTURAL DRAWINGS FOR ADDITIONAL INFORMATION
20. 6" X 6 1/2" HSS STUB COLUMN. SEE STRUCTURAL DRAWINGS FOR ADDITIONAL INFORMATION
21. PEDESTRIAN WALKWAY. SEE CIVIL DRAWINGS FOR ADDITIONAL INFORMATION
22. 18' X 14' HSS TUBE STEEL TRELLIS STRUCTURE. POWDERCOAT AND PAINT FINISH. SEE 13/A1.05 FOR ADDITIONAL INFORMATION
23. (N) TREE SHOWN DASHED & SCREENED. SEE LANDSCAPE DRAWINGS FOR ADDITIONAL INFORMATION
24. 14'-0" X 102'-6" HSS TUBE STEEL ROOF STRUCTURE OVERHEAD SHOWN DASHED. POWDERCOAT AND PAINT FINISH. SEE STRUCTURAL DRAWINGS FOR ADDITIONAL INFORMATION
25. FLOOR ANCHORED 5 ROW BLEACHER SEATING BY NATIONAL RECREATION SYSTEMS. SEE STRUCTURAL DRAWINGS FOR ADDITIONAL INFORMATION
26. 8" CMU WALL. SEE STRUCTURAL DRAWINGS FOR ADDITIONAL INFORMATION
27. COMPETITION POOL REEL STORAGE AREA. POOL TARPS SHOWN DASHED
28. 18" LONG GRAB BAR. 832 SERIES, BY BRADLEY. SEE 4/A8.06 FOR ACCESSIBLE HEIGHT REQUIRMENTS
29. 4" WIDE TRENCH FLOOR DRAIN. OFFSET 1" FROM ADJACENT WALL EDGE(S)
30. SHOWER, WALL MOUNTED. MODEL WS-IWCA, BY BRADLEY
31. COLLAPSIBLE SHOWER SEAT, WALL MOUNTED. MODEL 9562, BY BRADLEY. SEE 4/A8.06 FOR ACCESSIBLE HEIGHT REQUIRMENTS
32. ACCESSIBLE SHOWER, WALL MOUNTED. MODEL WS-IWCA-ADA, BY BRADLEY. SEE 4/A8.06 FOR ACCESSIBLE HEIGHT REQUIRMENTS
33. 36" LONG GRAB BAR. 832 SERIES, BY BRADLEY. SEE 4/A8.06 FOR ACCESSIBLE HEIGHT REQUIRMENTS
34. EDGE OF COMMUNITY BUILDING
35. WHITE LETTERING, 12" HEIGHT TO READ NO PARKING
36. 2x10 ANODIZED SEAT PLANK PER MANUFACTURER DRAWINGS
37. DOUBLE 2x10 MILL FOOT PLANK PER MANUFACTURER DRAWINGS
38. WHITE LETTERING, 12" HEIGHT TO READ EV CHARGING ONLY
39. FREE STANDING SINGLE PORT EV CHARGER. SEE ELECTRICAL DRAWINGS FOR ADDITIONAL INFORMATION
40. SURFACE MOUNTED 1-7/8" DIA. STAINLESS STEEL U BIKE RACK
41. 8" CMU WALL, SEE STRUCTURAL DRAWINGS FOR ADDITIONAL INFORMATION
42. CONCRETE HOUSEKEEPING PAD PER EV CHARGER MANUFACTURER. SEE ELECTRICAL DRAWINGS FOR ADDITIONAL INFORMATION
43. FIXED STEEL BOLLARD. SEE 12/A1.10 FOR ADDITIONAL INFORMATION
44. ACCESSIBLE VAN PARKING SIGN. SEE 11/A1.10 FOR ADDITIONAL INFORMATION

AGENCY

REVIEWED FOR CODE COMPLIANCE BY: WILLDAN ENGINEERING

Approval of these plans & specifications shall not be construed to be a permit for, or an approval of any violation of any Federal, State, County or City laws or ordinances. One set of approved plans must be kept on the job until completion.

9:23:41 AM Jul 21, 2025

FLEWELLING & MOODY
architecture planning interiors

HEADQUARTERS OFFICE:
99 S. Lake Avenue, Suite 300
Pasadena, CA 91101
Phone: 323.543.8300
E-Mail: fm-pasadena@flewelling-moody.com

ANTELOPE VALLEY OFFICE:
1035 West Lancaster Boulevard
Lancaster, California 93534
Phone: 661.949.0771
E-Mail: fm-lancaster@flewelling-moody.com

An Employee Owned Corporation

ARCHITECT

LICENSED ARCHITECT — MATT T. GABBARD — C-14211 — 06/30/2025 — STATE OF CALIFORNIA

CONSULTANT

Drawn by: Author

Check by: Checker

Revisions

No.	Date	Description

All dimensions must be checked at the job by the contractor who accepts full responsibility for their accuracy under the contract. These plans & the specifications in connection therewith have been prepared for a specific site. Any and all responsibility for their use in whole or in part on any other site is hereby disclaimed by Flewelling & Moody.

CITY OF RIDGECREST

SGT. JOHN PINNEY MEMORIAL POOL REPLACEMENT PROJECT

205 S WARNER ST, RIDGECREST, CA 93555

Drawing Title

ENLARGED SITE PLANS

Job No. 3055-0100

Sheet No. **A1.04**

Date 07/14/2025

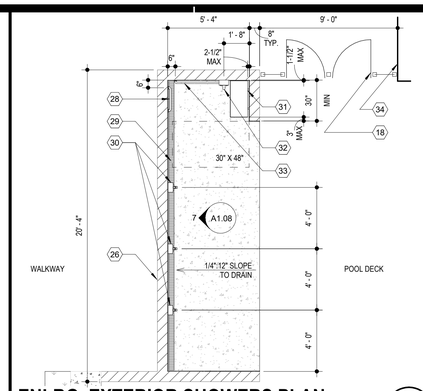

ENLRG. EXTERIOR SHOWERS PLAN

SCALE: 1/4" = 1'-0"

12 A1.04A2

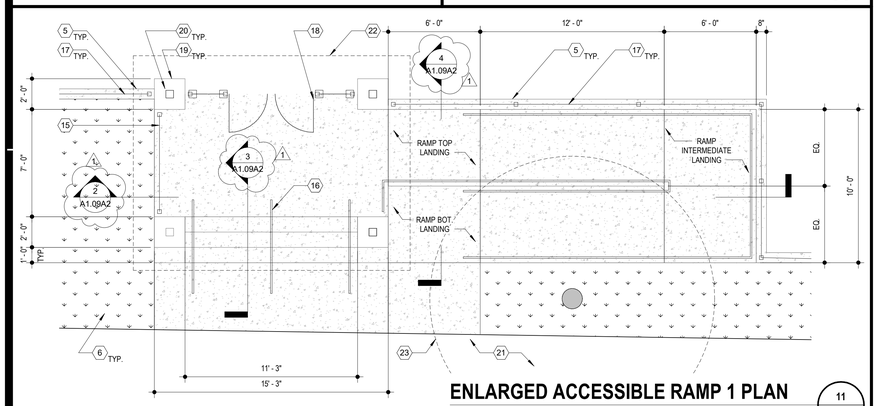

ENLARGED ACCESSIBLE RAMP 1 PLAN

SCALE: 1/4" = 1'-0"

11 A1.04A2

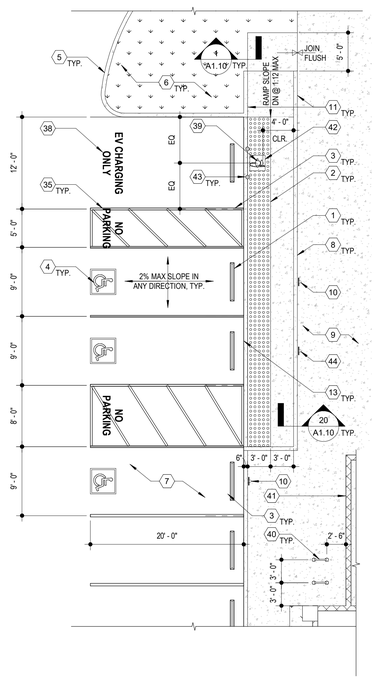

ENLARGED ACCESSIBLE PARKING PLAN

SCALE: 1/8" = 1'-0"

13 A1.04A2

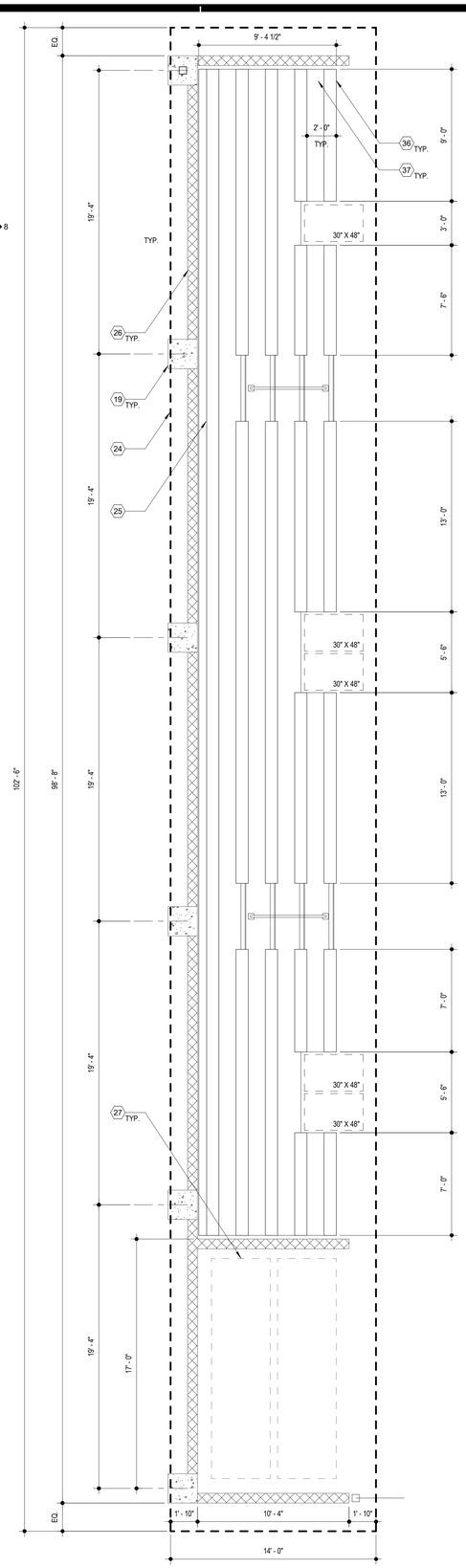

ENLARGED PERIMETER WALL & BLEACHER SEATNG PLAN

SCALE: 1/4" = 1'-0"

1 A1.04A2

GENERAL NOTES

1. REFER TO CIVIL, STRUCTURAL, PLUMBING, LOW VOLTAGE, POOL, LANDSCAPE, AND ELECTRICAL DRAWINGS FOR ADDITIONAL APPLICABLE SCOPE OF WORK.
2. CONTRACTOR SHALL VERIFY ALL CONDITIONS PRIOR TO CONSTRUCTION. ALL DISCREPANCIES SHALL BE BROUGHT TO THE ATENTION OF OWNER AND ARCHITECT PRIOR TO COMMENCING WORK.
3. PATCH AND REPAIR, OR REPLACE, ALL EXISTING ADJACENT SURFACES AND ITEMS AFFECTED BY NEW WORK. RESTORE FINISHES AND ITEMS TO MATCH EXISTING.
4. CONTRACTOR SHALL COORDINATE ALL REQUIRED SCOPE OF WORK WITH ALL TRADES TO COMMENCING WORK.
5. REFER TO POOL DRAWINGS FOR LOCATION OF COMEPETION POOL, ACTIVITY POOL, AND INSTRUCTIONAL POOL.

LEGEND

- (N) LANDSCAPE
- (N) CONCRETE
- TRUNCATED DOMES
- CMU WALL

CONSTRUCTION NOTES

1. CONCTRETE WHEEL STOP. SEE 6/A1.10 FOR ADDITIONAL INFORMATION
2. TRUNCATED DOMES. SEE 5/A1.10 FOR ADDITIONAL INFORMATION
3. 4" THICK BLUE STRIPING SHOWN HATCHED. TYPICAL FOR ACCESSIBLE PARKING SPACES
4. ACCESSIBLE PARKING SYMBOL. SEE 4/A1.10 FOR ADDITIONAL INFORMATION
5. 6" CONCRETE CURB. SEE CIVIL DRAWINGS FOR ADDITIONAL INFORMATION
6. LANDSCAPE PLANTING. SEE LANDSCAPE DRAWINGS FOR ADDITIONAL INFORMATION
7. AC PAVING THROUGHOUT
8. 4" CURB. SEE CIVIL DRAWINGS FOR ADDITIONAL INFORMATION
9. CONCRETE WALKWAY. SEE CIVIL DRAWINGS FOR ADDITIONAL INFORMATION
10. ACCESSIBLE PARKING SIGN. SEE 10/A1.10 FOR ADDITIONAL INFORMATION
11. VARIBLE HEIGHT CURB. SEE CIVIL DRAWINGS FOR ADDITIONAL INFORMATION
12. 4" THICK BLUE STRIPING SHOWN HATCHED
13. FLUSH TRANSITION BETWEEN DRIVEWAY AND PEDESTRIAN WALKWAY
14. 6" CURB AND 24" GUTTER. SEE CIVIL DRAWINGS FOR ADDITIONAL INFORMATION
15. WROUGHT IRON PERIMETER FENCING. SEE 1/A1.08 FOR ADDITIONAL INFORMATION
16. 1-1/4" DIAMETER GALVANIZED STANDARD PIPE HANDRAIL
17. WROUGHT IRON PERIMETER FENCING. SEE 2/A1.08 FOR ADDITIONAL INFORMATION
18. 7'-0" WIDE ACCESSIBLE GATE. SEE 6/A1.08 FOR ADDITIONAL INFORMATION
19. 24" X 24" CONCRETE PILASTER. SEE 8/A1.09 AND STRUCTURAL DRAWINGS FOR ADDITIONAL INFORMATION
20. 6" X 6 1/2" HSS STUB COLUMN. SEE STRUCTURAL DRAWINGS FOR ADDITIONAL INFORMATION
21. PEDESTRIAN WALKWAY. SEE CIVIL DRAWINGS FOR ADDITIONAL INFORMATION
22. 18' X 14' HSS TUBE STEEL TRELLIS STRUCTURE. POWDERCOAT AND PAINT FINISH. SEE 13/A1.05A2 FOR ADDITIONAL INFORMATION
23. (N) TREE SHOWN DASHED & SCREENED. SEE LANDSCAPE DRAWINGS FOR ADDITIONAL INFORMATION
24. 14'-0" X 102'-6" HSS TUBE STEEL ROOF STRUCTURE OVERHEAD SHOWN DASHED. POWDERCOAT AND PAINT FINISH. SEE STRUCTURAL DRAWINGS FOR ADDITIONAL INFORMATION
25. FLOOR ANCHORED 5 ROW BLEACHER SEATING BY NATIONAL RECREATION SYSTEMS. SEE STRUCTURAL DRAWINGS FOR ADDITIONAL INFORMATION
26. 8" CMU WALL. SEE STRUCTURAL DRAWINGS FOR ADDITIONAL INFORMATION
27. COMPETITION POOL REEL STORAGE AREA. POOL TARPS SHOWN DASHED
28. 18" LONG GRAB BAR. 832 SERIES, BY BRADLEY. SEE 4/A8.06 FOR ACCESSIBLE HEIGHT REQUIRMENTS
29. 4" WIDE TRENCH FLOOR DRAIN. OFFSET 1" FROM ADJACENT WALL EDGE(S)
30. SHOWER, WALL MOUNTED. MODEL WS-IWCA, BY BRADLEY
31. COLLAPSIBLE SHOWER SEAT, WALL MOUNTED. MODEL 9562, BY BRADLEY. SEE 4/A8.06 FOR ACCESSIBLE HEIGHT REQUIRMENTS
32. ACCESSIBLE SHOWER, WALL MOUNTED. MODEL WS-IWCA-ADA, BY BRADLEY. SEE 4/A8.06 FOR ACCESSIBLE HEIGHT REQUIRMENTS
33. 36" LONG GRAB BAR. 832 SERIES, BY BRADLEY. SEE 4/A8.06 FOR ACCESSIBLE HEIGHT REQUIRMENTS
34. EDGE OF COMMUNITY BUILDING
35. WHITE LETTERING, 12" HEIGHT TO READ NO PARKING
36. 2x10 ANODIZED SEAT PLANK PER MANUFACTURER DRAWINGS
37. DOUBLE 2x10 MILL FOOT PLANK PER MANUFACTURER DRAWINGS
38. WHITE LETTERING, 12" HEIGHT TO READ EV CHARGING ONLY
39. FREE STANDING SINGLE PORT EV CHARGER. SEE ELECTRICAL DRAWINGS FOR ADDITIONAL INFORMATION
40. SURFACE MOUNTED 1-7/8" DIA. STAINLESS STEEL U BIKE RACK
41. 8" CMU WALL. SEE STRUCTURAL DRAWINGS FOR ADDITIONAL INFORMATION
42. CONCRETE HOUSEKEEPING PAD PER EV CHARGER MANUFACTURER. SEE ELECTRICAL DRAWINGS FOR ADDITIONAL INFORMATION
43. FIXED STEEL BOLLARD. SEE 12/A1.10 FOR ADDITIONAL INFORMATION
44. ACCESSIBLE VAN PARKING SIGN. SEE 11/A1.10 FOR ADDITIONAL INFORMATION

AGENCY

FLEWELLING & MOODY
architecture planning interiors

HEADQUARTERS OFFICE:
99 S. Lake Avenue, Suite 300
Pasadena, CA 91101
Phone: 323.543.8300
E-Mail: fm-pasadena@flewelling-moody.com

ANTELOPE VALLEY OFFICE:
1035 West Lancaster Boulevard
Lancaster, California 93534
Phone: 661.949.0771
E-Mail: fm-lancaster@flewelling-moody.com

An Employee Owned Corporation

ARCHITECT

LICENSED ARCHITECT — MATT T. GABBERT — C-14211 — 08/31/2025 — STATE OF CALIFORNIA

CONSULTANT

Drawn by: Author
Check by: Checker
Revisions

No.	Date	Description
1	08/27/2025	BID ALTERNATE

All dimensions must be checked at the job by the contractor who accepts full responsibility for their accuracy under the contract. These plans & the specifications in connection therewith have been prepared for a specific site. Any and all responsibility for their use in whole or in part on any other site is hereby disclaimed by Flewelling & Moody.

CITY OF RIDGECREST

SGT. JOHN PINNEY MEMORIAL POOL REPLACEMENT PROJECT

205 S WARNER ST, RIDGECREST, CA 93555

Drawing Title

ENLARGED SITE PLANS ALT 2

Job No. 3055-0100

Sheet No. **A1.04A2**

Date 12/20/2024

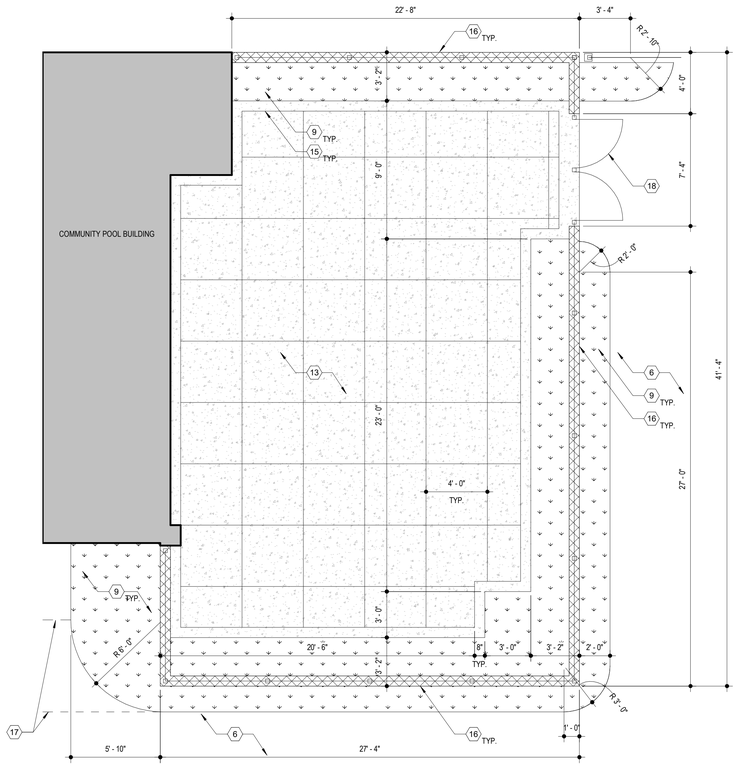

ENLRG. COMMUNITY ROOM PATIO PLAN

SCALE: 1/4" = 1'-0"

7 A1.05

ENLRG. COVERED ENTRANCE PLAN

SCALE: 1/4" = 1'-0"

13 A1.05

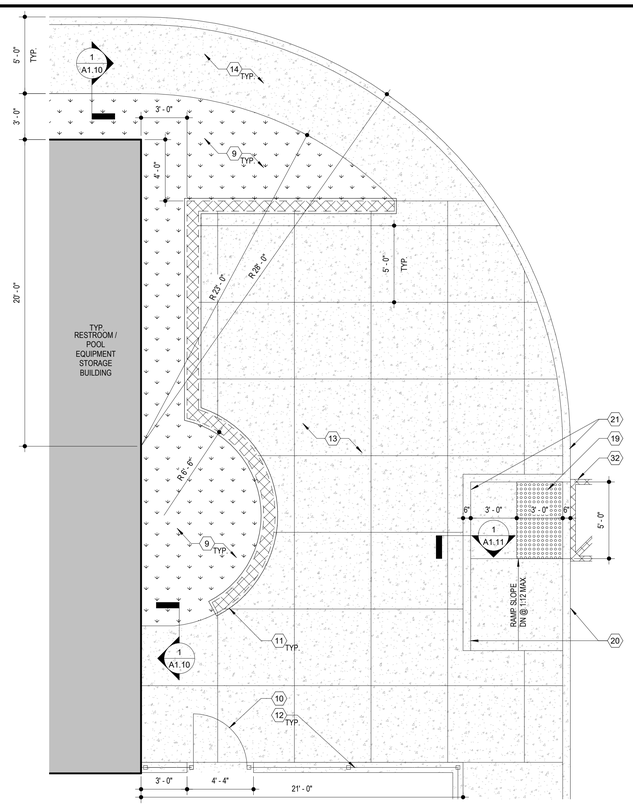

ENLRG. PASSIVE USE AREA PLAN

SCALE: 1/4" = 1'-0"

5 A1.05

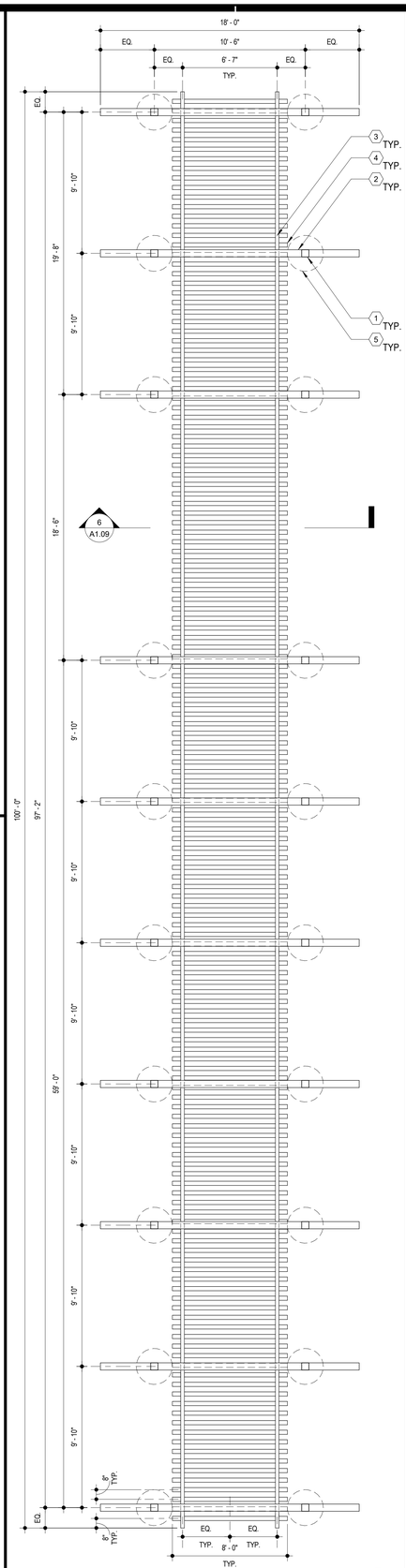

ENLRG. COVERED WALKWAY PLAN

SCALE: 1/4" = 1'-0"

1 A1.05

GENERAL NOTES

1. REFER TO CIVIL, STRUCTURAL, PLUMBING, LOW VOLTAGE, POOL, LANDSCAPE, AND ELECTRICAL DRAWINGS FOR ADDITIONAL APPLICABLE SCOPE OF WORK.
2. CONTRACTOR SHALL VERIFY ALL CONDITIONS PRIOR TO CONSTRUCTION. ALL DISCREPANCIES SHALL BE BROUGHT TO THE ATENTION OF OWNER AND ARCHITECT PRIOR TO COMMENCING WORK.
3. PATCH AND REPAIR, OR REPLACE, ALL EXISTING ADJACENT SURFACES AND ITEMS AFFECTED BY NEW WORK. RESTORE FINISHES AND ITEMS TO MATCH EXISTING.
4. CONTRACTOR SHALL COORDINATE ALL REQUIRED SCOPE OF WORK WITH ALL TRADES TO COMMENCING WORK.
5. REFER TO POOL DRAWINGS FOR LOCATION OF COMEPETION POOL, ACTIVITY POOL, AND INSTRUCTIONAL POOL.

LEGEND

- (N) LANDSCAPE
- (N) CONCRETE
- TRUNCATED DOMES
- CMU WALL
- (N) BUILDING

CONSTRUCTION NOTES

1. 6" X 6" X 1/4" HSS COLUMN. POWDERCOAT AND PAINT FINISH SEE STRUCTURAL DWGS FOR ADDITIONAL INFORMATION
2. 6" X 6" X 1/4" HSS BEAM. POWDERCOAT AND PAINT FINISH SEE STRUCTURAL DWGS FOR ADDITIONAL INFORMATION
3. 3" X 3" X 3/16" HSS RAIL. POWDERCOAT AND PAINT FINISH. SEE STRUCTURAL DWGS FOR ADDITIONAL INFORMATION
4. 1" X 4" X 8'-0" PLASTIC LUMBER DECK BOARD, TYP.
5. 30" DIAMETER X 5'-3" DEEP CONCRETE FOOTING. SEE STRUCTURAL DRAWINGS FOR ADDITIONAL INFORMATION
6. 6" CONCRETE DECK OVER 6" THICK LAYER OF COMPACTED AGGREGATE BASE. SEE POOL DRAWINGS FOR ADDITIONAL INFORMATION
7. 6" X 6 1/2" HSS STUB COLUMN. POWDERCOAT AND PAINT FINISH. SEE STRUCTURAL DWGS FOR ADDITIONAL INFORMATION
8. 24" X 24" CONCRETE PILASTER. SEE 8/A1.09 AND STRUCTURAL DWGS FOR ADDITIONAL INFORMATION, TYP.
9. PLANTER. SEE LANDSCAPE DRAWINGS FOR ADDITIONAL INFORMATION
10. 2'-8" WIDE ACCESSIBLE GATE. SEE 5/A1.08 FOR ADDITIONAL INFORMATION
11. 18" TALL BLOCK SEATWALL W/ STUCCO FINISH. SEE LANDSCAPE DWGS FOR ADDITIONAL INFORMATION
12. 6'-0" H. WROUGHT IRON PERIMITER FENCING. SEE 3/A1.08 FOR ADDITIONAL INFORMATION
13. CONCRETE PAVING THROUGHOUT. SEE CIVIL AND LANDSCAPE DRAWINGS FOR ADDITIONAL INFORMATION
14. CONCRETE WALKWAY. SEE CIVIL DRAWINGS FOR ADDITIONAL INFORMATION
15. 8" CONCRETE BAND. SEE LANDSCAPE DRAWINGS FOR ADDITIONAL INFORMATION
16. 6'-0" H. WROUGHT IRON FENCING OVER CMU LOW WALL. SEE 4/A1.08 FOR ADDITIONAL INFORMATION
17. GRADE BREAK. SEE CIVIL AND AQUATIC DRAWINGS FOR ADDITIONAL INFORMATION
18. 7'-0" WIDE ACCESSIBLE GATE. SEE 6/A1.08 FOR ADDITIONAL INFORMATION
19. TRUNCATED DOMES. SEE 5/A1.10 FOR ADDITIONAL INFORMATION
20. VARIBLE HEIGHT CURB, SEE CIVIL DRAWINGS FOR ADDITIONAL INFORMATION
21. 6" CONCRETE CURB, SEE CIVIL DRAWINGS FOR ADDITIONAL INFORMATION
22. CONCTRETE WHEEL STOP. SEE 6/A1.10 FOR ADDITIONAL INFORMATION
23. 4" THICK WHITE STRIPING, TYPICAL FOR STANDARD PARKING SPACES. SEE 8/A1.10 FOR ADDITIONAL INFORMATION
24. 21'-3" X 66'-0" HSS TUBE STEEL CARPORT STRUCTURE ROOF SHOWN DASHED. SEE STRUCTURAL DRAWINGS FOR ADDITIONAL INFORMATION
25. 12" X 8" TUBE STEEL COLUMN. POWDERCOAT AND PAINT FINISH. SEE STRUCTURAL DRAWINGS FO ADDITIONAL INFORMATION
26. 30" DIAMETER X 36" H. CONCRETE PILASTER. SEE STRUCTURAL DRAWINGS FOR ADDITIONAL INFORMATION
27. 6'-6" H. WROUGHT IRON PERIMETER FENCING. SEE 1/A1.08 FOR ADDITIONAL INFORMATION
28. 4" THICK CONCRETE PAD WITH #4 BARS AT 18" O.C. EACH WAY. SIZE PER EVCS MANUFACTURER RECOMMENDATIONS
29. FIXED STEEL BOLLARD. SEE 12/A1.10 FOR ADDITIONAL INFORMATION
30. ELECTRICT VEHICLE CHARGING STATION. SEE ELECTRICAL DRAWINGS FOR ADDITIONAL INFORMATION
31. WHITE LETTERING, 12" HEIGHT TO READ EV CHARGING ONLY
32. 4" WIDE PAINTED BLUE BORDER, 36" O.C. DIAGONAL STRIPE CONTRASTINGW/ BACKGROUND

AGENCY

REVIEWED FOR CODE COMPLIANCE BY:
WILLDAN ENGINEERING

Approval of these plans & specifications shall not be construed to be a permit for, or an approval of any violation of any Federal, State, County or City laws or ordinances. One set of approved plans must be kept on the job until completion.

9:23:43 AM Jul 21, 2025

FLEWELLING & MOODY
architecture planning interiors

HEADQUARTERS OFFICE:
99 S. Lake Avenue, Suite 300
Pasadena, CA 91101
Phone: 323.543.8300
E-Mail: fm-pasadena@flewelling-moody.com

ANTELOPE VALLEY OFFICE:
1035 West Lancaster Boulevard
Lancaster, California 93534
Phone: 661.949.0771
E-Mail: fm-lancaster@flewelling-moody.com

An Employee Owned Corporation

ARCHITECT

LICENSED ARCHITECT
MATT T. GARDNER
C-14211
06/30/2025
STATE OF CALIFORNIA

CONSULTANT

Drawn by: Author
Check by: Checker
Revisions

No.	Date	Description

All dimensions must be checked at the job by the contractor who accepts full responsibility for their accuracy under the contract. These plans & the specifications in connection therewith have been prepared for a specific site. Any and all responsibility for their use in whole or in part on any other site is hereby disclaimed by Flewelling & Moody.

CITY OF RIDGECREST

SGT. JOHN PINNEY MEMORIAL POOL REPLACEMENT PROJECT

205 S WARNER ST, RIDGECREST, CA 93555

Drawing Title

ENLARGED SITE PLANS

Job No. 3055-0100

Sheet No. A1.05

Date 07/14/2025

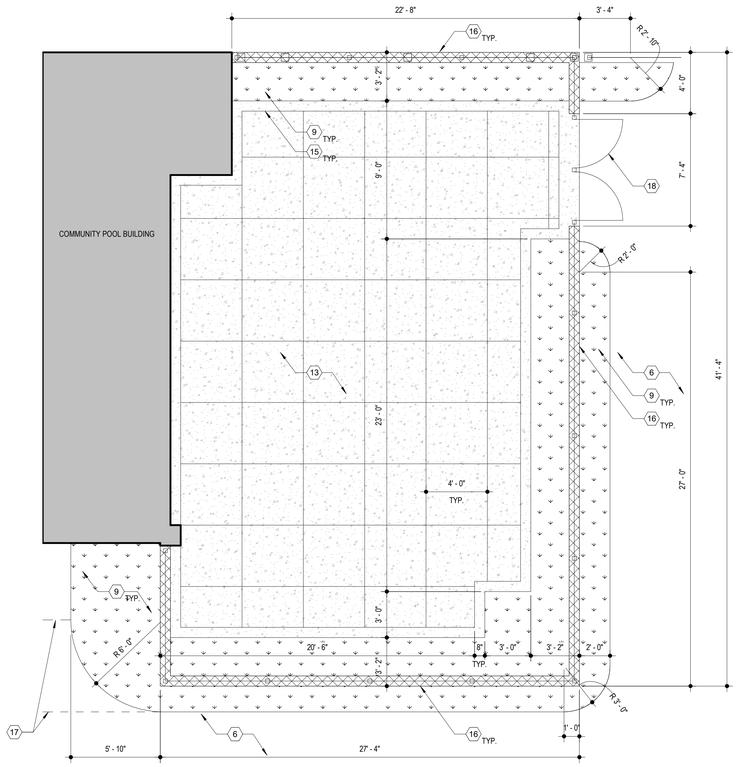

ENLRG. COMMUNITY ROOM PATIO PLAN

SCALE: 1/4" = 1'-0"

7 / A1.05A2

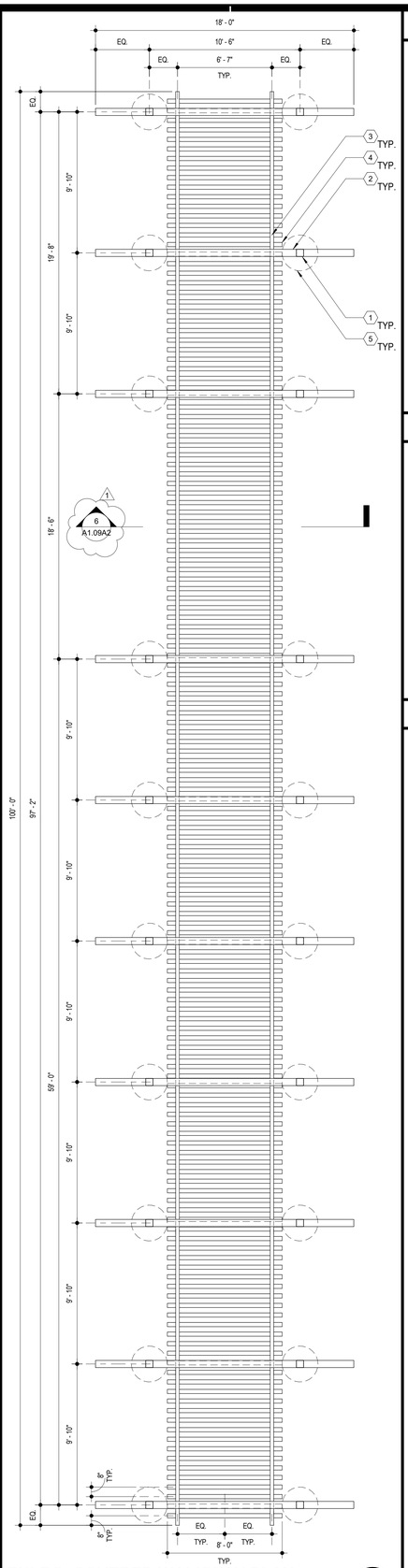

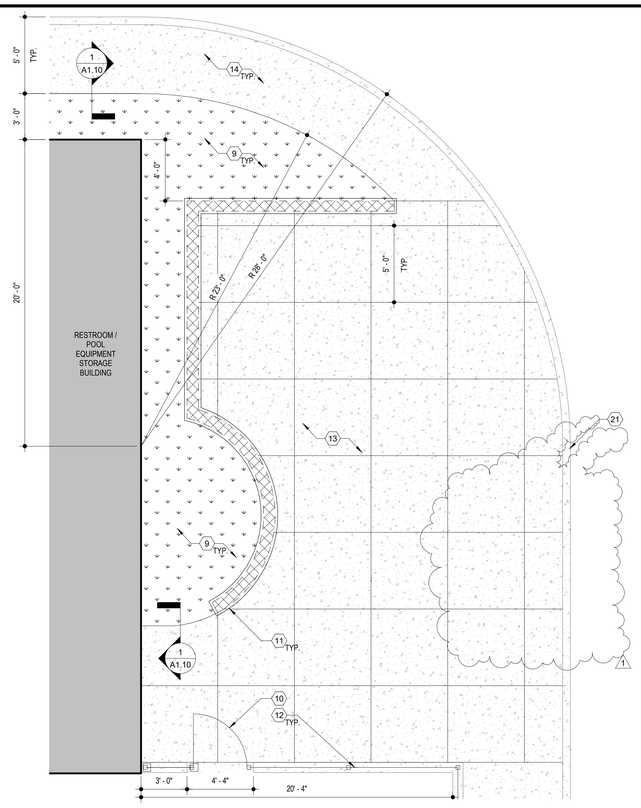

ENLRG. PASSIVE USE AREA PLAN

SCALE: 1/4" = 1'-0"

5 / A1.05A2

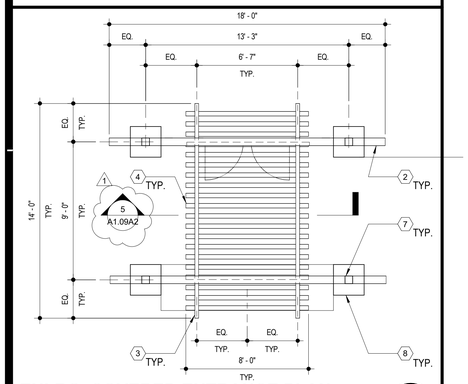

ENLRG. COVERED ENTRANCE PLAN

SCALE: 1/4" = 1'-0"

13 / A1.05A2

ENLRG. COVERED WALKWAY PLAN

SCALE: 1/4" = 1'-0"

1 / A1.05A2

GENERAL NOTES

1. REFER TO CIVIL, STRUCTURAL, PLUMBING, LOW VOLTAGE, POOL, LANDSCAPE, AND ELECTRICAL DRAWINGS FOR ADDITIONAL APPLICABLE SCOPE OF WORK.
2. CONTRACTOR SHALL VERIFY ALL CONDITIONS PRIOR TO CONSTRUCTION. ALL DISCREPANCIES SHALL BE BROUGHT TO THE ATENTION OF OWNER AND ARCHITECT PRIOR TO COMMENCING WORK.
3. PATCH AND REPAIR, OR REPLACE, ALL EXISTING ADJACENT SURFACES AND ITEMS AFFECTED BY NEW WORK. RESTORE FINISHES AND ITEMS TO MATCH EXISTING.
4. CONTRACTOR SHALL COORDINATE ALL REQUIRED SCOPE OF WORK WITH ALL TRADES TO COMMENCING WORK.
5. REFER TO POOL DRAWINGS FOR LOCATION OF COMEPETION POOL, ACTIVITY POOL, AND INSTRUCTIONAL POOL.

LEGEND

- (N) LANDSCAPE
- (N) CONCRETE
- TRUNCATED DOMES
- CMU WALL
- (N) BUILDING

CONSTRUCTION NOTES

1. 6" X 6" X 1/4" HSS COLUMN. POWDERCOAT AND PAINT FINISH SEE STRUCTURAL DWGS FOR ADDITIONAL INFORMATION
2. 6" X 6" X 1/4" HSS BEAM. POWDERCOAT AND PAINT FINISH SEE STRUCTURAL DWGS FOR ADDITIONAL INFORMATION
3. 3" X 3" X 3/16" HSS RAIL. POWDERCOAT AND PAINT FINISH. SEE STRUCTURAL DWGS FOR ADDITIONAL INFORMATION
4. 1" X 4" X 8'-0" PLASTIC LUMBER DECK BOARD, TYP.
5. 30" DIAMETER X 5'-3" DEEP CONCRETE FOOTING. SEE STRUCTURAL DRAWINGS FOR ADDITIONAL INFORMATION
6. 6" CONCRETE DECK OVER 6" THICK LAYER OF COMPACTED AGGREGATE BASE. SEE POOL DRAWINGS FOR ADDITIONAL INFORMATION
7. 6" X 6 1/2" HSS STUB COLUMN. POWDERCOAT AND PAINT FINISH. SEE STRUCTURAL DWGS FOR ADDITIONAL INFORMATION
8. 24" X 24" CONCRETE PILASTER. SEE 8/A1.09A2 AND STRUCTURAL DWGS FOR ADDITIONAL INFORMATION, TYP.
9. PLANTER. SEE LANDSCAPE DRAWINGS FOR ADDITIONAL INFORMATION
10. 2'-8" WIDE ACCESSIBLE GATE. SEE 5/A1.08 FOR ADDITIONAL INFORMATION
11. 18" TALL BLOCK SEATWALL W/ STUCCO FINISH. SEE LANDSCAPE DWGS FOR ADDITIONAL INFORMATION
12. 6'-0" H. WROUGHT IRON PERIMITER FENCING. SEE 3/A1.08 FOR ADDITIONAL INFORMATION
13. CONCRETE PAVING THROUGHOUT. SEE CIVIL AND LANDSCAPE DRAWINGS FOR ADDITIONAL INFORMATION
14. CONCRETE WALKWAY. SEE CIVIL DRAWINGS FOR ADDITIONAL INFORMATION
15. 8" CONCRETE BAND. SEE LANDSCAPE DRAWINGS FOR ADDITIONAL INFORMATION
16. 6'-0" H. WROUGHT IRON FENCING OVER CMU LOW WALL. SEE 4/A1.08 FOR ADDITIONAL INFORMATION
17. GRADE BREAK. SEE CIVIL AND AQUATIC DRAWINGS FOR ADDITIONAL INFORMATION
18. 7'-0" WIDE ACCESSIBLE GATE. SEE 6/A1.08 FOR ADDITIONAL INFORMATION
19. TRUNCATED DOMES. SEE 5/A1.10 FOR ADDITIONAL INFORMATION
20. VARIBLE HEIGHT CURB, SEE CIVIL DRAWINGS FOR ADDITIONAL INFORMATION
21. 6" CONCRETE CURB, SEE CIVIL DRAWINGS FOR ADDITIONAL INFORMATION
22. CONCTRETE WHEEL STOP. SEE 6/A1.10 FOR ADDITIONAL INFORMATION
23. 4" THICK WHITE STRIPING, TYPICAL FOR STANDARD PARKING SPACES. SEE 8/A1.10 FOR ADDITIONAL INFORMATION
24. 21'-3" X 66'-0" HSS TUBE STEEL CARPORT STRUCTURE ROOF SHOWN DASHED. SEE STRUCTURAL DRAWINGS FOR ADDITIONAL INFORMATION
25. 12" X 8" TUBE STEEL COLUMN. POWDERCOAT AND PAINT FINISH. SEE STRUCTURAL DRAWINGS FO ADDITIONAL INFORMATION
26. 30" DIAMETER X 36" H. CONCRETE PILASTER. SEE STRUCTURAL DRAWINGS FOR ADDITIONAL INFORMATION
27. 6'-6" H. WROUGHT IRON PERIMETER FENCING. SEE 1/A1.08 FOR ADDITIONAL INFORMATION
28. 4" THICK CONCRETE PAD WITH #4 BARS AT 18" O.C. EACH WAY. SIZE PER EVCS MANUFACTURER RECOMMENDATIONS
29. FIXED STEEL BOLLARD. SEE 12/A1.10 FOR ADDITIONAL INFORMATION
30. ELECTRICT VEHICLE CHARGING STATION. SEE ELECTRICAL DRAWINGS FOR ADDITIONAL INFORMATION
31. WHITE LETTERING, 12" HEIGHT TO READ EV CHARGING ONLY
32. 4" WIDE PAINTED BLUE BORDER, 36" O.C. DIAGONAL STRIPE CONTRASTINGW/ BACKGROUND

AGENCY

FLEWELLING & MOODY
architecture planning interiors

HEADQUARTERS OFFICE:
99 S. Lake Avenue, Suite 300
Pasadena, CA 91101
Phone: 323.543.8300
E-Mail: fm-pasadena@flewelling-moody.com

ANTELOPE VALLEY OFFICE:
1035 West Lancaster Boulevard
Lancaster, California 93534
Phone: 661.949.0771
E-Mail: fm-lancaster@flewelling-moody.com

An Employee Owned Corporation

ARCHITECT

LICENSED ARCHITECT
MATT T. CARD
C-14211
REN. DATE 08/31/2025
STATE OF CALIFORNIA

CONSULTANT

Drawn by: Author
Check by: Checker
Revisions

No.	Date	Description
1	08/27/2025	BID ALTERNATE

All dimensions must be checked at the job by the contractor who accepts full responsibility for their accuracy under the contract. These plans & the specifications in connection therewith have been prepared for a specific site. Any and all responsibility for their use in whole or in part on any other site is hereby disclaimed by Flewelling & Moody.

CITY OF RIDGECREST

SGT. JOHN PINNEY MEMORIAL POOL REPLACEMENT PROJECT

205 S WARNER ST, RIDGECREST, CA 93555

Drawing Title

ENLARGED SITE PLANS ALT 2

Job No. 3055-0100

Date 12/20/2024

Sheet No. **A1.05A2**

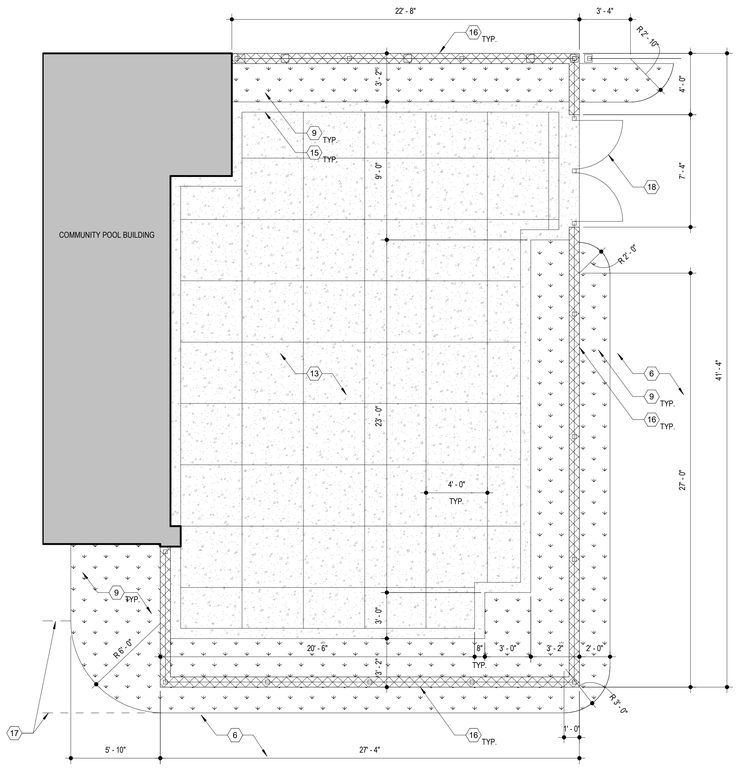

ENLRG. COMMUNITY ROOM PATIO PLAN

SCALE: 1/4" = 1'-0"

7 / A1.05A3

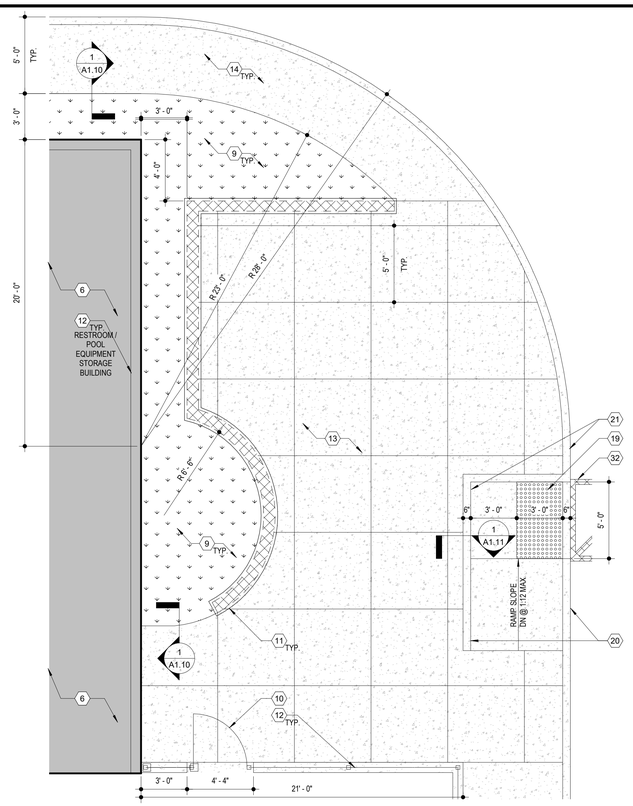

ENLRG. PASSIVE USE AREA PLAN

SCALE: 1/4" = 1'-0"

5 / A1.05A3

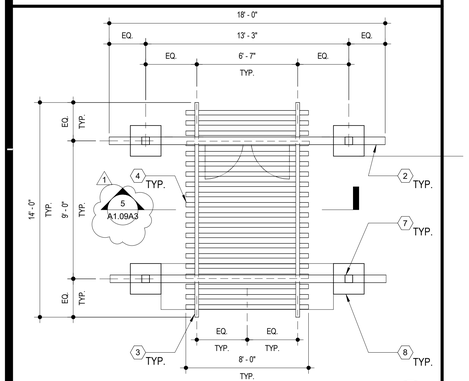

ENLRG. COVERED ENTRANCE PLAN

SCALE: 1/4" = 1'-0"

13 / A1.05A3

GENERAL NOTES

1. REFER TO CIVIL, STRUCTURAL, PLUMBING, LOW VOLTAGE, POOL, LANDSCAPE, AND ELECTRICAL DRAWINGS FOR ADDITIONAL APPLICABLE SCOPE OF WORK.
2. CONTRACTOR SHALL VERIFY ALL CONDITIONS PRIOR TO CONSTRUCTION. ALL DISCREPANCIES SHALL BE BROUGHT TO THE ATENTION OF OWNER AND ARCHITECT PRIOR TO COMMENCING WORK.
3. PATCH AND REPAIR, OR REPLACE, ALL EXISTING ADJACENT SURFACES AND ITEMS AFFECTED BY NEW WORK. RESTORE FINISHES AND ITEMS TO MATCH EXISTING.
4. CONTRACTOR SHALL COORDINATE ALL REQUIRED SCOPE OF WORK WITH ALL TRADES TO COMMENCING WORK.
5. REFER TO POOL DRAWINGS FOR LOCATION OF COMEPETION POOL, ACTIVITY POOL, AND INSTRUCTIONAL POOL.

LEGEND

- (N) LANDSCAPE
- (N) CONCRETE
- TRUNCATED DOMES
- CMU WALL
- (N) BUILDING

CONSTRUCTION NOTES

1
2. 6" X 6" X 1/4" HSS BEAM. POWDERCOAT AND PAINT FINISH SEE STRUCTURAL DWGS FOR ADDITIONAL INFORMATION
3. 3" X 3" X 3/16" HSS RAIL. POWDERCOAT AND PAINT FINISH. SEE STRUCTURAL DWGS FOR ADDITIONAL INFORMATION
4. 1" X 4" X 8'-0" PLASTIC LUMBER DECK BOARD, TYP.
1
6. 6" CONCRETE DECK OVER 6" THICK LAYER OF COMPACTED AGGREGATE BASE. SEE POOL DRAWINGS FOR ADDITIONAL INFORMATION
7. 6" X 6 1/2" HSS STUB COLUMN. POWDERCOAT AND PAINT FINISH. SEE STRUCTURAL DWGS FOR ADDITIONAL INFORMATION
8. 24" X 24" CONCRETE PILASTER. SEE 8/A1.09A3 AND STRUCTURAL DWGS FOR ADDITIONAL INFORMATION, TYP.
1
9. PLANTER. SEE LANDSCAPE DRAWINGS FOR ADDITIONAL INFORMATION
10. 2'-8" WIDE ACCESSIBLE GATE. SEE 5/A1.08 FOR ADDITIONAL INFORMATION
11. 18" TALL BLOCK SEATWALL W/ STUCCO FINISH. SEE LANDSCAPE DWGS FOR ADDITIONAL INFORMATION
12. 6'-0" H. WROUGHT IRON PERIMITER FENCING. SEE 2/A1.08 FOR ADDITIONAL INFORMATION
13. CONCRETE PAVING THROUGHOUT. SEE CIVIL AND LANDSCAPE DRAWINGS FOR ADDITIONAL INFORMATION
14. CONCRETE WALKWAY. SEE CIVIL DRAWINGS FOR ADDITIONAL INFORMATION
15. 8" CONCRETE BAND. SEE LANDSCAPE DRAWINGS FOR ADDITIONAL INFORMATION
16. 6'-0" H. WROUGHT IRON FENCING OVER CMU LOW WALL. SEE 4/A1.08 FOR ADDITIONAL INFORMATION
17. GRADE BREAK. SEE CIVIL AND AQUATIC DRAWINGS FOR ADDITIONAL INFORMATION
18. 7'-0" WIDE ACCESSIBLE GATE. SEE 6/A1.08 FOR ADDITIONAL INFORMATION
19. TRUNCATED DOMES. SEE 5/A1.10 FOR ADDITIONAL INFORMATION
20. VARIBLE HEIGHT CURB, SEE CIVIL DRAWINGS FOR ADDITIONAL INFORMATION
21. 6" CONCRETE CURB, SEE CIVIL DRAWINGS FOR ADDITIONAL INFORMATION
22. CONCTRETE WHEEL STOP. SEE 6/A1.10 FOR ADDITIONAL INFORMATION
23. 4" THICK WHITE STRIPING, TYPICAL FOR STANDARD PARKING SPACES. SEE 8/A1.10 FOR ADDITIONAL INFORMATION
24. 21'-3" X 66'-0" HSS TUBE STEEL CARPORT STRUCTURE ROOF SHOWN DASHED. SEE STRUCTURAL DRAWINGS FOR ADDITIONAL INFORMATION
25. 12" X 8" TUBE STEEL COLUMN. POWDERCOAT AND PAINT FINISH. SEE STRUCTURAL DRAWINGS FOR ADDITIONAL INFORMATION
26. 30" DIAMETER X 36" H. CONCRETE PILASTER. SEE STRUCTURAL DRAWINGS FOR ADDITIONAL INFORMATION
27. 6'-6" H. WROUGHT IRON PERIMETER FENCING. SEE 1/A1.08 FOR ADDITIONAL INFORMATION
28. 4" THICK CONCRETE PAD WITH #4 BARS AT 18" O.C. EACH WAY. SIZE PER EVCS MANUFACTURER RECOMMENDATIONS
29. FIXED STEEL BOLLARD. SEE 12/A1.10 FOR ADDITIONAL INFORMATION
30. ELECTRICT VEHICLE CHARGING STATION. SEE ELECTRICAL DRAWINGS FOR ADDITIONAL INFORMATION
31. WHITE LETTERING, 12" HEIGHT TO READ EV CHARGING ONLY
32. 4" WIDE PAINTED BLUE BORDER, 36" O.C. DIAGONAL STRIPE CONTRASTING W/ BACKGROUND

AGENCY

FLEWELLING & MOODY
architecture planning interiors

HEADQUARTERS OFFICE:
99 S. Lake Avenue, Suite 300
Pasadena, CA 91101
Phone: 323.543.8300
E-Mail: fm-pasadena@flewelling-moody.com

ANTELOPE VALLEY OFFICE:
1035 West Lancaster Bouldvard
Lancaster, California 93534
Phone: 661.949.0771
E-Mail: fm-lancaster@flewelling-moody.com

An Employee Owned Corporation

ARCHITECT

LICENSED ARCHITECT
MATT T. CARDENAS
C-14211
08/31/2025
STATE OF CALIFORNIA

CONSULTANT

Drawn by: Author
Check by: Checker
Revisions

No.	Date	Description
1	08/27/2025	BID ALTERNATE

All dimensions must be checked at the job by the contractor who accepts full responsibility for their accuracy under the contract. These plans & the specifications in connection therewith have been prepared for a specific site. Any and all responsibility for their use in whole or in part on any other site is hereby disclaimed by Flewelling & Moody.

CITY OF RIDGECREST

SGT. JOHN PINNEY MEMORIAL POOL REPLACEMENT PROJECT

205 S WARNER ST, RIDGECREST, CA 93555

Drawing Title

ENLARGED SITE PLANS ALT 3

Job No. 3055-0100

Sheet No. **A1.05A3**

Date 12/20/2024

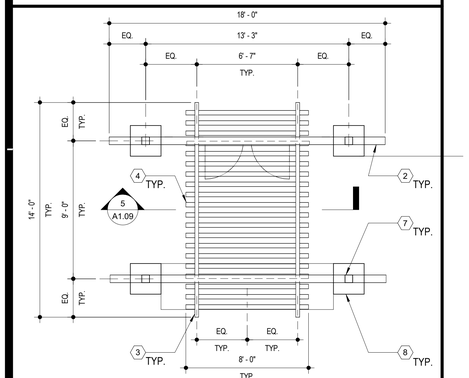

ENLRG. COVERED ENTRANCE PLAN

SCALE: 1/4" = 1'-0"

13 / A1.05A6

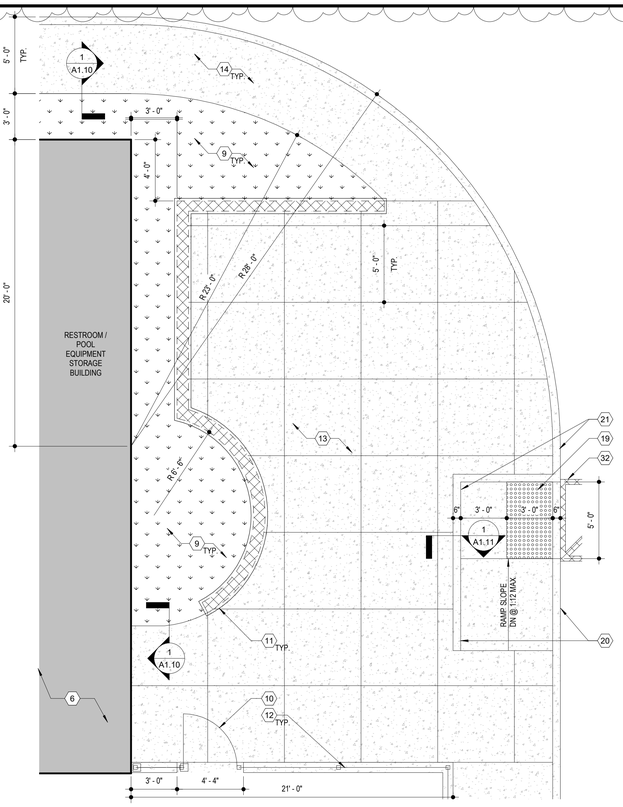

ENLRG. PASSIVE USE AREA PLAN

SCALE: 1/4" = 1'-0"

5 / A1.05A6

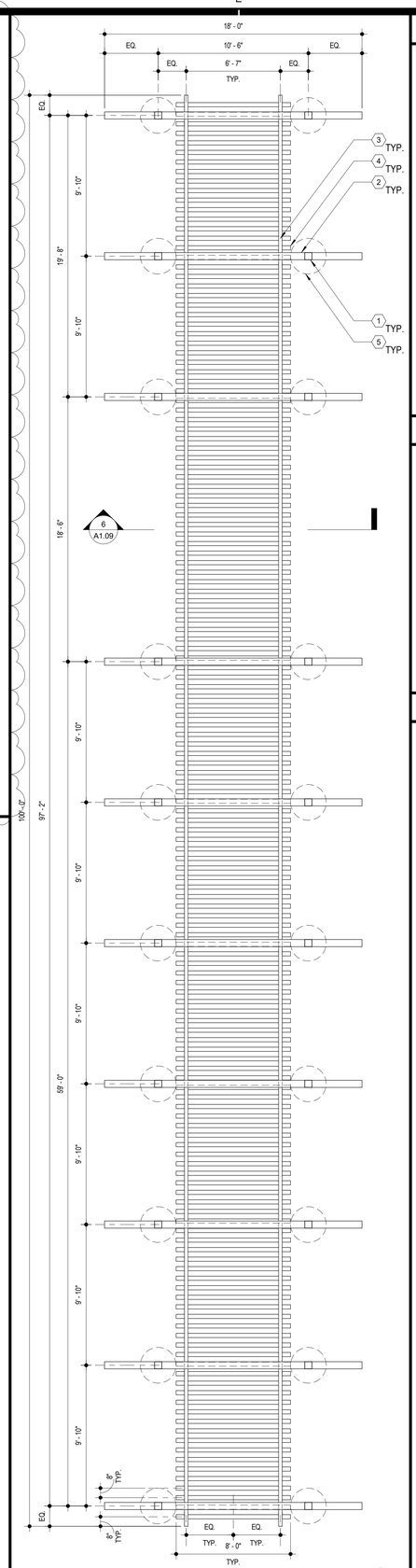

ENLRG. COVERED WALKWAY PLAN

SCALE: 1/4" = 1'-0"

1 / A1.05A6

GENERAL NOTES

1. REFER TO CIVIL, STRUCTURAL, PLUMBING, LOW VOLTAGE, POOL, LANDSCAPE, AND ELECTRICAL DRAWINGS FOR ADDITIONAL APPLICABLE SCOPE OF WORK.
2. CONTRACTOR SHALL VERIFY ALL CONDITIONS PRIOR TO CONSTRUCTION. ALL DISCREPANCIES SHALL BE BROUGHT TO THE ATENTION OF OWNER AND ARCHITECT PRIOR TO COMMENCING WORK.
3. PATCH AND REPAIR, OR REPLACE, ALL EXISTING ADJACENT SURFACES AND ITEMS AFFECTED BY NEW WORK. RESTORE FINISHES AND ITEMS TO MATCH EXISTING.
4. CONTRACTOR SHALL COORDINATE ALL REQUIRED SCOPE OF WORK WITH ALL TRADES TO COMMENCING WORK.
5. REFER TO POOL DRAWINGS FOR LOCATION OF COMEPETION POOL, ACTIVITY POOL, AND INSTRUCTIONAL POOL.

LEGEND

- (N) LANDSCAPE
- (N) CONCRETE
- TRUNCATED DOMES
- CMU WALL
- (N) BUILDING

CONSTRUCTION NOTES

1. 6" X 6" X 1/4" HSS COLUMN. POWDERCOAT AND PAINT FINISH SEE STRUCTURAL DWGS FOR ADDITIONAL INFORMATION
2. 6" X 6" X 1/4" HSS BEAM. POWDERCOAT AND PAINT FINISH SEE STRUCTURAL DWGS FOR ADDITIONAL INFORMATION
3. 3" X 3" X 3/16" HSS RAIL. POWDERCOAT AND PAINT FINISH. SEE STRUCTURAL DWGS FOR ADDITIONAL INFORMATION
4. 1" X 4" X 8'-0" PLASTIC LUMBER DECK BOARD, TYP.
5. 30" DIAMETER X 5'-3" DEEP CONCRETE FOOTING. SEE STRUCTURAL DRAWINGS FOR ADDITIONAL INFORMATION
6. 6" CONCRETE DECK OVER 6" THICK LAYER OF COMPACTED AGGREGATE BASE. SEE POOL DRAWINGS FOR ADDITIONAL INFORMATION
7. 6" X 6 1/2" HSS STUB COLUMN. POWDERCOAT AND PAINT FINISH. SEE STRUCTURAL DWGS FOR ADDITIONAL INFORMATION
8. 24" X 24" CONCRETE PILASTER. SEE 8/A1.09 AND STRUCTURAL DWGS FOR ADDITIONAL INFORMATION, TYP.
9. PLANTER. SEE LANDSCAPE DRAWINGS FOR ADDITIONAL INFORMATION
10. 2'-8" WIDE ACCESSIBLE GATE. SEE 5/A1.08A6 FOR ADDITIONAL INFORMATION
11. 18" TALL BLOCK SEATWALL W/ STUCCO FINISH. SEE LANDSCAPE DWGS FOR ADDITIONAL INFORMATION
12. 6'-0" H. WROUGHT IRON PERIMITER FENCING. SEE 3/A1.08A6 FOR ADDITIONAL INFORMATION
13. CONCRETE PAVING THROUGHOUT. SEE CIVIL AND LANDSCAPE DRAWINGS FOR ADDITIONAL INFORMATION
14. CONCRETE WALKWAY. SEE CIVIL DRAWINGS FOR ADDITIONAL INFORMATION
15. 8" CONCRETE BAND. SEE LANDSCAPE DRAWINGS FOR ADDITIONAL INFORMATION
16. 6'-0" H. WROUGHT IRON FENCING OVER CMU LOW WALL. SEE 4/A1.08A6 FOR ADDITIONAL INFORMATION
17. GRADE BREAK. SEE CIVIL AND AQUATIC DRAWINGS FOR ADDITIONAL INFORMATION
18. 7'-0" WIDE ACCESSIBLE GATE. SEE 6/A1.08A6 FOR ADDITIONAL INFORMATION
19. TRUNCATED DOMES. SEE 5/A1.10 FOR ADDITIONAL INFORMATION
20. VARIBLE HEIGHT CURB, SEE CIVIL DRAWINGS FOR ADDITIONAL INFORMATION
21. 6" CONCRETE CURB, SEE CIVIL DRAWINGS FOR ADDITIONAL INFORMATION
22. CONCTRETE WHEEL STOP. SEE 6/A1.10 FOR ADDITIONAL INFORMATION
23. 4" THICK WHITE STRIPING, TYPICAL FOR STANDARD PARKING SPACES. SEE 8/A1.10 FOR ADDITIONAL INFORMATION
24. 21'-3" X 66'-0" HSS TUBE STEEL CARPORT STRUCTURE ROOF SHOWN DASHED. SEE STRUCTURAL DRAWINGS FOR ADDITIONAL INFORMATION
25. 12" X 8" TUBE STEEL COLUMN. POWDERCOAT AND PAINT FINISH. SEE STRUCTURAL DRAWINGS FO ADDITIONAL INFORMATION
26. 30" DIAMETER X 36" H. CONCRETE PILASTER. SEE STRUCTURAL DRAWINGS FOR ADDITIONAL INFORMATION
27. 6'-6" H. WROUGHT IRON PERIMETER FENCING. SEE 1/A1.08A6 FOR ADDITIONAL INFORMATION
28. 4" THICK CONCRETE PAD WITH #4 BARS AT 18" O.C. EACH WAY. SIZE PER EVCS MANUFACTURER RECOMMENDATIONS
29. FIXED STEEL BOLLARD. SEE 12/A1.10 FOR ADDITIONAL INFORMATION
30. ELECTRICT VEHICLE CHARGING STATION. SEE ELECTRICAL DRAWINGS FOR ADDITIONAL INFORMATION
31. WHITE LETTERING, 12" HEIGHT TO READ EV CHARGING ONLY
32. 4" WIDE PAINTED BLUE BORDER, 36" O.C. DIAGONAL STRIPE CONTRASTINGW/ BACKGROUND

AGENCY

FLEWELLING & MOODY
architecture planning interiors

HEADQUARTERS OFFICE:
99 S. Lake Avenue, Suite 300
Pasadena, CA 91101
Phone: 323.543.8300
E-Mail: fm-pasadena@flewelling-moody.com

ANTELOPE VALLEY OFFICE:
1035 West Lancaster Boulevard
Lancaster, California 93534
Phone: 661.949.0771
E-Mail: fm-lancaster@flewelling-moody.com

An Employee Owned Corporation

ARCHITECT

LICENSED ARCHITECT
MATT T. CARD
C-14211
08/31/2025
STATE OF CALIFORNIA

CONSULTANT

Drawn by: Author
Check by: Checker

Revisions

No.	Date	Description
1	08/27/2025	BID ALTERNATE

All dimensions must be checked at the job by the contractor who accepts full responsibility for their accuracy under the contract. These plans & the specifications in connection therewith have been prepared for a specific site. Any and all responsibility for their use in whole or in part on any other site is hereby disclaimed by Flewelling & Moody.

CITY OF RIDGECREST

SGT. JOHN PINNEY MEMORIAL POOL REPLACEMENT PROJECT

205 S WARNER ST, RIDGECREST, CA 93555

Drawing Title

ENLARGED SITE PLANS ALT 6

Job No. 3055-0100

Sheet No. **A1.05A6**

Date 12/20/2024

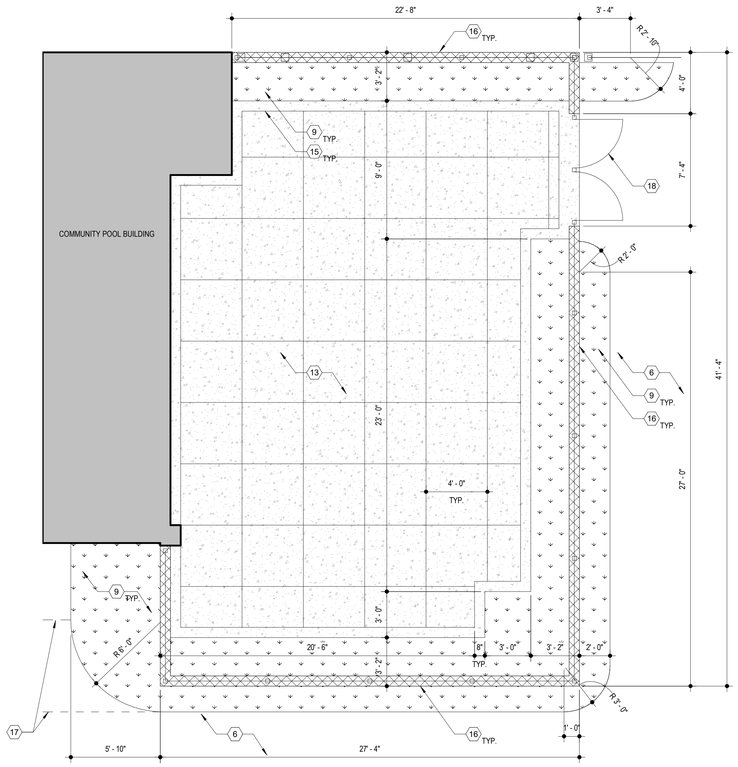

ENLRG. COMMUNITY ROOM PATIO PLAN

SCALE: 1/4" = 1'-0"

7 / A1.05A7

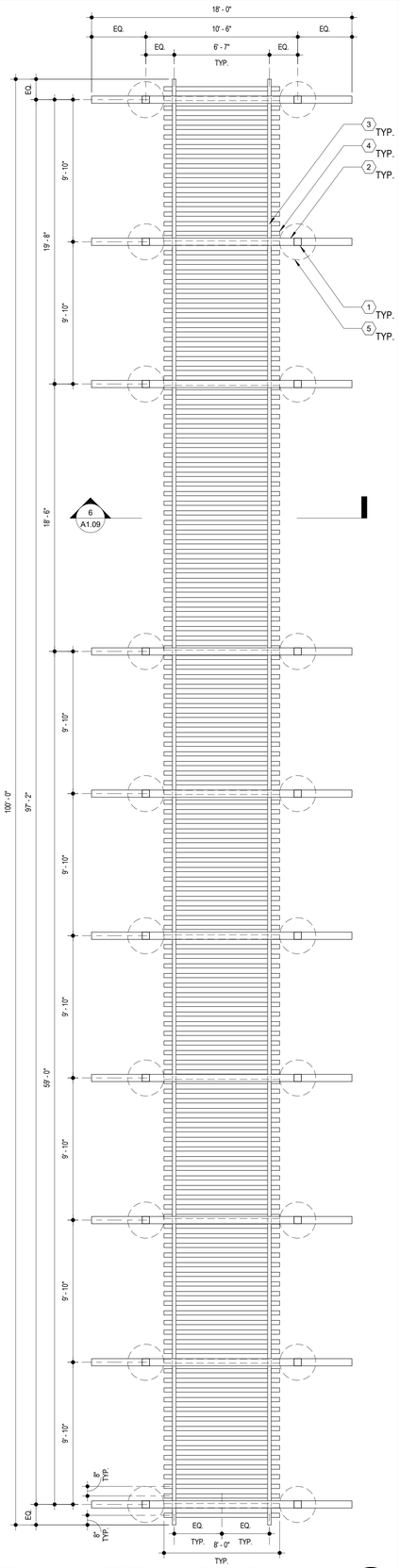

ENLRG. COVERED WALKWAY PLAN

SCALE: 1/4" = 1'-0"

1 / A1.05A7

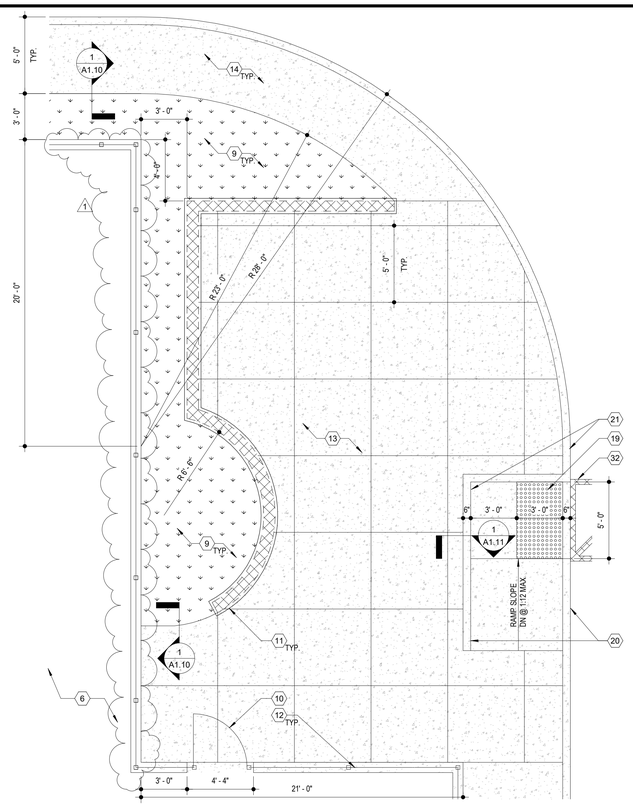

ENLRG. PASSIVE USE AREA PLAN

SCALE: 1/4" = 1'-0"

5 / A1.05A7

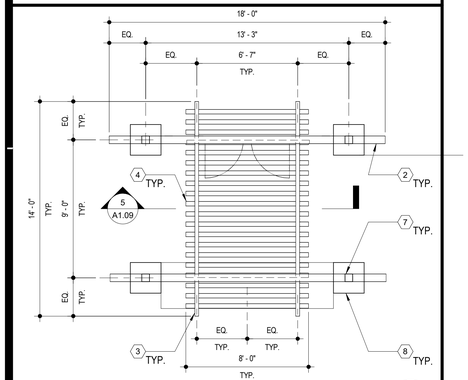

ENLRG. COVERED ENTRANCE PLAN

SCALE: 1/4" = 1'-0"

13 / A1.05A7

GENERAL NOTES

1. REFER TO CIVIL, STRUCTURAL, PLUMBING, LOW VOLTAGE, POOL, LANDSCAPE, AND ELECTRICAL DRAWINGS FOR ADDITIONAL APPLICABLE SCOPE OF WORK.
2. CONTRACTOR SHALL VERIFY ALL CONDITIONS PRIOR TO CONSTRUCTION. ALL DISCREPANCIES SHALL BE BROUGHT TO THE ATENTION OF OWNER AND ARCHITECT PRIOR TO COMMENCING WORK.
3. PATCH AND REPAIR, OR REPLACE, ALL EXISTING ADJACENT SURFACES AND ITEMS AFFECTED BY NEW WORK. RESTORE FINISHES AND ITEMS TO MATCH EXISTING.
4. CONTRACTOR SHALL COORDINATE ALL REQUIRED SCOPE OF WORK WITH ALL TRADES TO COMMENCING WORK.
5. REFER TO POOL DRAWINGS FOR LOCATION OF COMEPETION POOL, ACTIVITY POOL, AND INSTRUCTIONAL POOL.

LEGEND

- (N) LANDSCAPE
- (N) CONCRETE
- TRUNCATED DOMES
- CMU WALL
- (N) BUILDING

CONSTRUCTION NOTES

1. 6" X 6" X 1/4" HSS COLUMN. POWDERCOAT AND PAINT FINISH SEE STRUCTURAL DWGS FOR ADDITIONAL INFORMATION
2. 6" X 6" X 1/4" HSS BEAM. POWDERCOAT AND PAINT FINISH SEE STRUCTURAL DWGS FOR ADDITIONAL INFORMATION
3. 3" X 3" X 3/16" HSS RAIL. POWDERCOAT AND PAINT FINISH. SEE STRUCTURAL DWGS FOR ADDITIONAL INFORMATION
4. 1" X 4" X 8'-0" PLASTIC LUMBER DECK BOARD, TYP.
5. 30" DIAMETER X 5'-3" DEEP CONCRETE FOOTING. SEE STRUCTURAL DRAWINGS FOR ADDITIONAL INFORMATION
6. 6" CONCRETE DECK OVER 6" THICK LAYER OF COMPACTED AGGREGATE BASE. SEE POOL DRAWINGS FOR ADDITIONAL INFORMATION
7. 6" X 6 1/2" HSS STUB COLUMN. POWDERCOAT AND PAINT FINISH. SEE STRUCTURAL DWGS FOR ADDITIONAL INFORMATION
8. 24" X 24" CONCRETE PILASTER. SEE 8/A1.09 AND STRUCTURAL DWGS FOR ADDITIONAL INFORMATION, TYP.
9. PLANTER. SEE LANDSCAPE DRAWINGS FOR ADDITIONAL INFORMATION
10. 2'-8" WIDE ACCESSIBLE GATE. SEE 5/A1.08 FOR ADDITIONAL INFORMATION
11. 18" TALL BLOCK SEATWALL W/ STUCCO FINISH. SEE LANDSCAPE DWGS FOR ADDITIONAL INFORMATION
12. 6'-0" H. WROUGHT IRON PERIMITER FENCING. SEE 3/A1.08 FOR ADDITIONAL INFORMATION
13. CONCRETE PAVING THROUGHOUT. SEE CIVIL AND LANDSCAPE DRAWINGS FOR ADDITIONAL INFORMATION
14. CONCRETE WALKWAY. SEE CIVIL DRAWINGS FOR ADDITIONAL INFORMATION
15. 8" CONCRETE BAND. SEE LANDSCAPE DRAWINGS FOR ADDITIONAL INFORMATION
16. 6'-0" H. WROUGHT IRON FENCING OVER CMU LOW WALL. SEE 4/A1.08 FOR ADDITIONAL INFORMATION
17. GRADE BREAK. SEE CIVIL AND AQUATIC DRAWINGS FOR ADDITIONAL INFORMATION
18. 7'-0" WIDE ACCESSIBLE GATE. SEE 6/A1.08 FOR ADDITIONAL INFORMATION
19. TRUNCATED DOMES. SEE 5/A1.10 FOR ADDITIONAL INFORMATION
20. VARIBLE HEIGHT CURB, SEE CIVIL DRAWINGS FOR ADDITIONAL INFORMATION
21. 6" CONCRETE CURB, SEE CIVIL DRAWINGS FOR ADDITIONAL INFORMATION
22. CONCTRETE WHEEL STOP. SEE 6/A1.10 FOR ADDITIONAL INFORMATION
23. 4" THICK WHITE STRIPING, TYPICAL FOR STANDARD PARKING SPACES. SEE 8/A1.10 FOR ADDITIONAL INFORMATION
24. 21'-3" X 66'-0" HSS TUBE STEEL CARPORT STRUCTURE ROOF SHOWN DASHED. SEE STRUCTURAL DRAWINGS FOR ADDITIONAL INFORMATION
25. 12" X 8" TUBE STEEL COLUMN. POWDERCOAT AND PAINT FINISH. SEE STRUCTURAL DRAWINGS FO ADDITIONAL INFORMATION
26. 30" DIAMETER X 36" H. CONCRETE PILASTER. SEE STRUCTURAL DRAWINGS FOR ADDITIONAL INFORMATION
27. 6'-6" H. WROUGHT IRON PERIMETER FENCING. SEE 1/A1.08 FOR ADDITIONAL INFORMATION
28. 4" THICK CONCRETE PAD WITH #4 BARS AT 18" O.C. EACH WAY. SIZE PER EVCS MANUFACTURER RECOMMENDATIONS
29. FIXED STEEL BOLLARD. SEE 12/A1.10 FOR ADDITIONAL INFORMATION
30. ELECTRICT VEHICLE CHARGING STATION. SEE ELECTRICAL DRAWINGS FOR ADDITIONAL INFORMATION
31. WHITE LETTERING, 12" HEIGHT TO READ EV CHARGING ONLY
32. 4" WIDE PAINTED BLUE BORDER, 36" O.C. DIAGONAL STRIPE CONTRASTINGW/ BACKGROUND

AGENCY

FLEWELLING & MOODY
architecture planning interiors

HEADQUARTERS OFFICE:
99 S. Lake Avenue, Suite 300
Pasadena, CA 91101
Phone: 323.543.8300
E-Mail: fm-pasadena@flewelling-moody.com

ANTELOPE VALLEY OFFICE:
1035 West Lancaster Bouldvard
Lancaster, California 93534
Phone: 661.949.0771
E-Mail: fm-lancaster@flewelling-moody.com

An Employee Owned Corporation

ARCHITECT

CONSULTANT

Drawn by: Author
Check by: Checker

Revisions

No.	Date	Description
1	08/27/2025	BID ALTERNATE

All dimensions must be checked at the job by the contractor who accepts full responsibility for their accuracy under the contract. These plans & the specifications in connection therewith have been prepared for a specific site. Any and all responsibility for their use in whole or in part on any other site is hereby disclaimed by Flewelling & Moody.

CITY OF RIDGECREST

SGT. JOHN PINNEY MEMORIAL POOL REPLACEMENT PROJECT

205 S WARNER ST, RIDGECREST, CA 93555

Drawing Title

ENLARGED SITE PLANS ALT 7

Job No. 3055-0100

Sheet No. **A1.05A7**

Date 12/20/2024

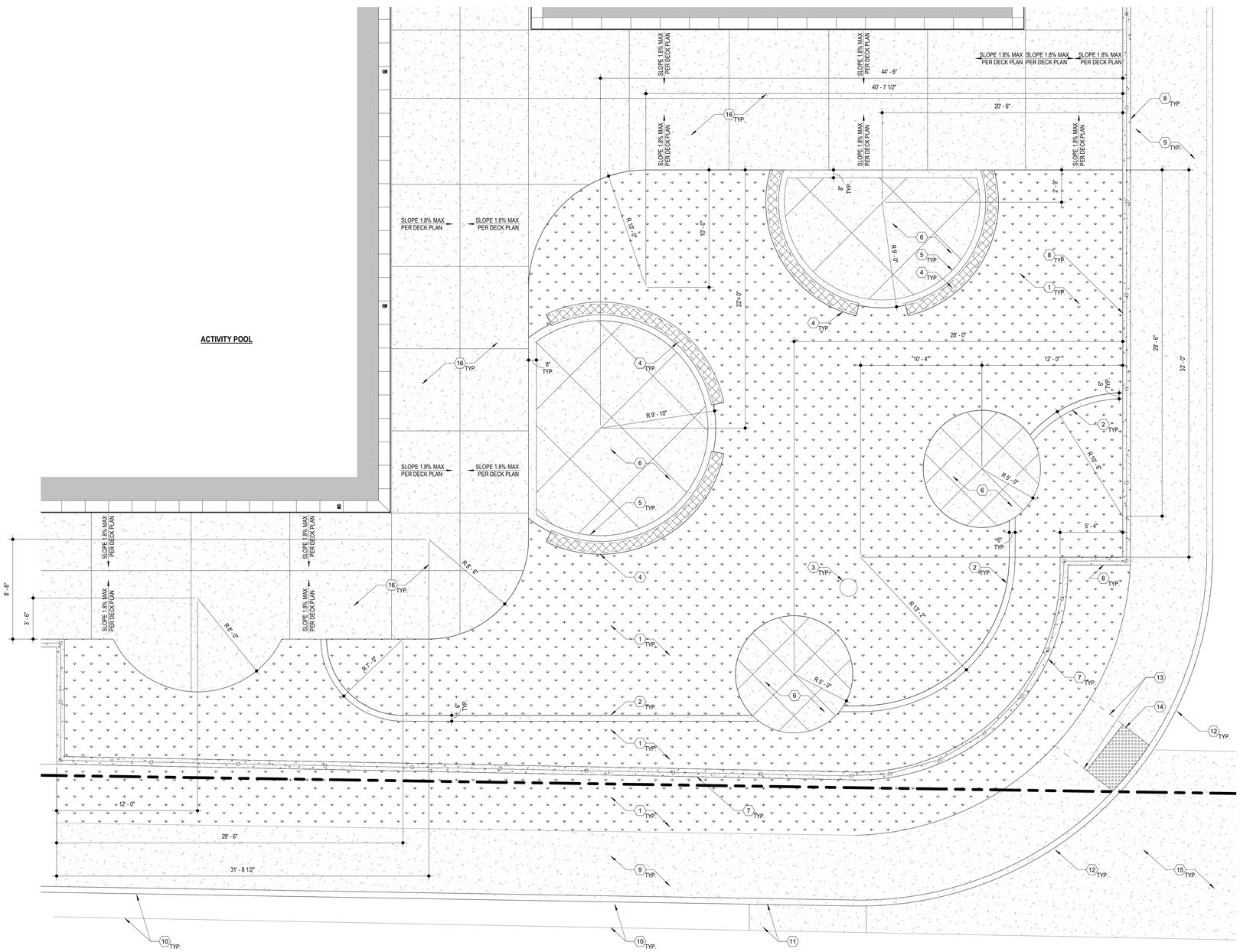

ENLARGED PASSIVE USE TURF AREA PLAN

SCALE: 1/4" = 1'-0"

1 A1.06

GENERAL NOTES

1. REFER TO CIVIL, STRUCTURAL, PLUMBING, LOW VOLTAGE, POOL, LANDSCAPE, AND ELECTRICAL DRAWINGS FOR ADDITIONAL APPLICABLE SCOPE OF WORK.
2. CONTRACTOR SHALL VERIFY ALL CONDITIONS PRIOR TO CONSTRUCTION. ALL DISCREPANCIES SHALL BE BROUGHT TO THE ATENTION OF OWNER AND ARCHITECT PRIOR TO COMMENCING WORK.
3. PATCH AND REPAIR, OR REPLACE, ALL EXISTING ADJACENT SURFACES AND ITEMS AFFECTED BY NEW WORK. RESTORE FINISHES AND ITEMS TO MATCH EXISTING.
4. CONTRACTOR SHALL COORDINATE ALL REQUIRED SCOPE OF WORK WITH ALL TRADES TO COMMENCING WORK.
5. REFER TO POOL DRAWINGS FOR LOCATION OF COMEPETION POOL, ACTIVITY POOL, AND INSTRUCTIONAL POOL.

LEGEND

- (N) LANDSCAPE
- (N) CONCRETE
- TRUNCATED DOMES
- CMU WALL

RECONSTRUCTION KEY NOTES

1. PLANTER. SEE LANDSCAPE DRAWINGS FOR ADDITIONAL INFORMATION
2. 6" CONCRETE TURF HEADER. SEE LANDSCAPE DRAWINGS FOR ADDITIONAL INFORMATION
3. 18" DIAMETER DRAIN BASIN. SEE CIVIL DRAWINGS FOR ADDITIONAL INFORMATION
4. 18" TALL BLOCK SEATWALL W/ STUCCO FINISH. SEE LANDSCAPE DWGS FOR ADDITIONAL INFORMATION
5. 8" CONCRETE BAND. SEE LANDSCAPE DRAWINGS FOR ADDITIONAL INFORMATION
6. CONCRETE PAVING THROUGHOUT. SEE CIVIL AND LANDSCAPE DRAWINGS FOR ADDITIONAL INFORMATION
7. 6'-0" H. WROUGHT IRON PERIMITER FENCING. SEE 2/A1.08 FOR ADDITIONAL INFORMATION
8. 6'-0" H. WROUGHT IRON PERIMITER FENCING. SEE 3/A1.08 FOR ADDITIONAL INFORMATION
9. (N) CONCRETE PEDESTRIAN WALKWAY. SEE CIVIL DRAWINGS FOR ADDITIONAL INFORMATION
10. (E) CURB AND GUTTER TO REMAIN, PROTECT IN PLACE
11. (N) VARIABLE HIGHT CURB AND 24" GUTTER. SEE CIVIL DRAWINGS FOR ADDITIONAL INFORMAITON
12. (N) VARIABLE HIGHT CURB. SEE CIVIL DRAWINGS FOR ADDITIONAL INFORMATION
13. GRADE BREAK. SEE CIVIL DRAWINGS FOR ADDITIONAL INFORMATION
14. TRUNCATED DOMES. SEE 5/A1.10 FOR ADDITIONAL INFORMATION
15. (N) CONCRETE DRIVEWAY. SEE CIVIL DRAWINGS FOR ADDITIONAL INFORMATION
16. POOL DECK. SEE AQUATIC DRAWINGS FOR ADDITIONAL INFORMATION

AGENCY

REVIEWED FOR CODE COMPLIANCE BY: WILLDAN ENGINEERING

Approval of these plans & specifications shall not be construed to be a permit for, or an approval of any violation of any Federal, State, County or City laws or ordinances. One set of approved plans must be kept on the job until completion.

9:23:44 AM Jul 21, 2025

FLEWELLING & MOODY
architecture planning interiors

HEADQUARTERS OFFICE:
99 S. Lake Avenue, Suite 300
Pasadena, CA 91101
Phone: 323.543.8300
E-Mail: fm-pasadena@flewelling-moody.com

ANTELOPE VALLEY OFFICE:
1035 West Lancaster Bouldvard
Lancaster, California 93534
Phone: 661.949.0771
E-Mail: fm-lancaster@flewelling-moody.com

An Employee Owned Corporation

ARCHITECT

LICENSED ARCHITECT — MATTHEW T. GARDNER — C-14211 — 06/30/2025 — STATE OF CALIFORNIA

CONSULTANT

Drawn by: Author
Check by: Checker

Revisions

No.	Date	Description

All dimensions must be checked at the job by the contractor who accepts full responsibility for their accuracy under the contract. These plans & the specifications in connection therewith have been prepared for a specific site. Any and all responsibility for their use in whole or in part on any other site is hereby disclaimed by Flewelling & Moody.

CITY OF RIDGECREST

SGT. JOHN PINNEY MEMORIAL POOL REPLACEMENT PROJECT

205 S WARNER ST, RIDGECREST, CA 93555

Drawing Title

ENLARGED SITE PLANS

Job No. 3055-0100

Sheet No. **A1.06**

Date 07/14/2025

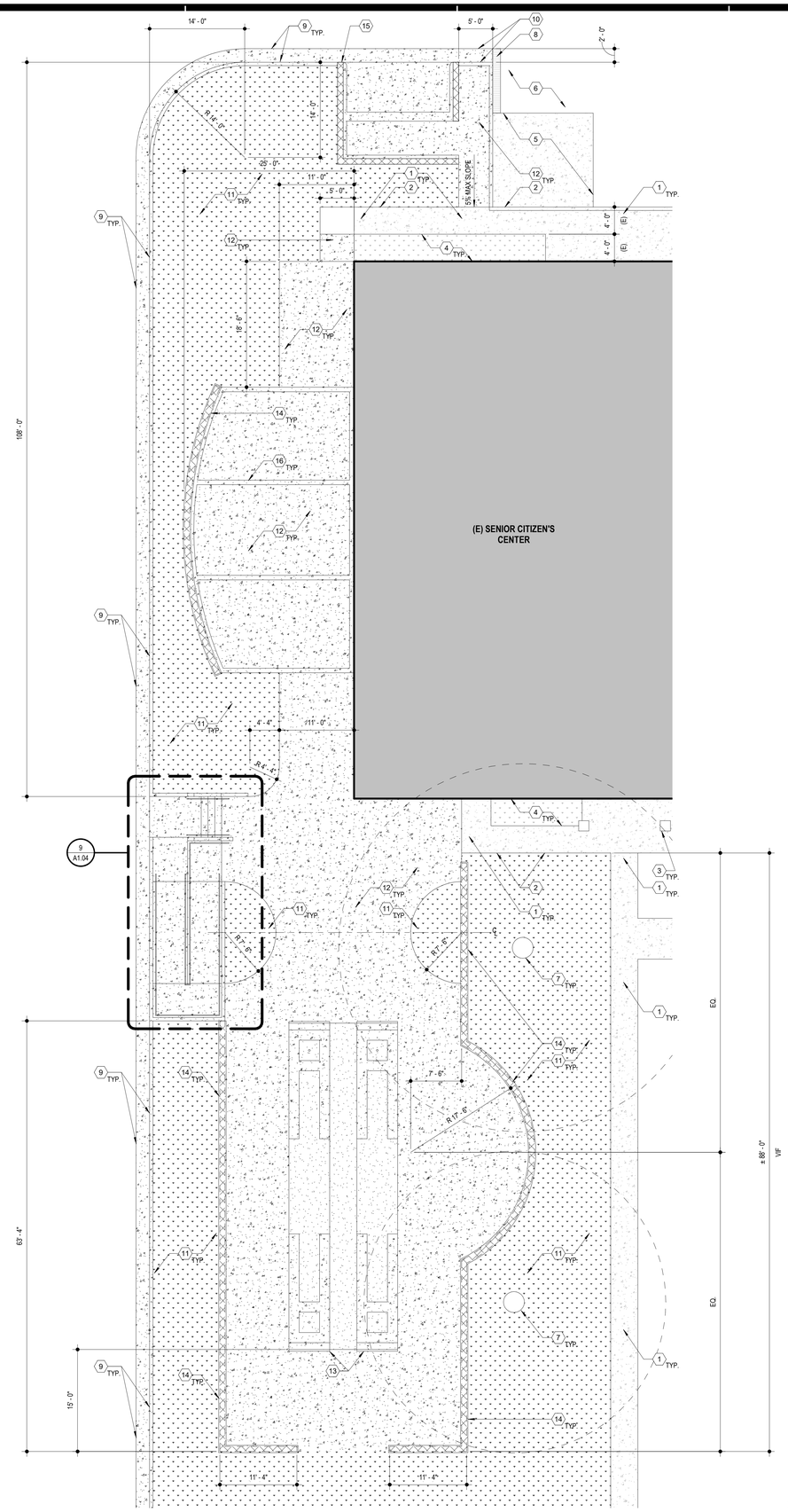

ENLARGED SENIOR CITIZEN OUTDOOR AREA PLAN

SCALE: 1/8" = 1'-0"

1 / A1.07

GENERAL NOTES

1. REFER TO CIVIL, STRUCTURAL, PLUMBING, LOW VOLTAGE, LANDSCAPE, AND ELECTRICAL DRAWINGS FOR ADDITIONAL APPLICABLE SCOPE OF WORK.
2. CONTRACTOR SHALL VERIFY ALL CONDITIONS PRIOR TO CONSTRUCTION. ALL DISCREPANCIES SHALL BE BROUGHT TO THE ATENTION OF OWNER AND ARCHITECT PRIOR TO COMMENCING WORK.
3. PATCH AND REPAIR, OR REPLACE, ALL EXISTING ADJACENT SURFACES AND ITEMS AFFECTED BY NEW WORK. RESTORE FINISHES AND ITEMS TO MATCH EXISTING.
4. CONTRACTOR SHALL COORDINATE ALL REQUIRED SCOPE OF WORK WITH ALL TRADES TO COMMENCING WORK.

LEGEND

- (N) LANDSCAPE
- (E) LANDSCAPE
- (N) CONCRETE
- (E) CONCRETE
- TRUNCATED DOMES
- (E) BUILDING
- CMU WALL
- DECOMPOSED GRANITE

RECONSTRUCTION KEY NOTES

1. (E) CONCRETE WALKWAY TO REMAIN. PROTECT IN PLACE
2. EDGE OF (E) CONCRETE WALKWAY
3. (E) CMU COLUMN TO REMIAN, PROTECT IN PLACE
4. (E) LANDSCAPE TO REMAIN. PROTECT IN PLACE
5. (E) CONCRETE PAD TO REMAIN. PROTECT IN PLACE
6. (E) AC PAVING PARKING LOT TO REMAIN. PROTECT IN PLACE
7. (E) TREE TO REMAIN
8. (N) AC PAVEMENT. SEE CIVIL DRAWINGS FOR ADDITIONAL INFORMATION
9. (N) 6" CURB AND 24" GUTTER, SEE CIVIL DRAWINGS FOR ADDITIONAL INFORMATION
10. (N) VARIABLE HIGHT CURB AND 24" GUTTER. SEE CIVIL DRAWINGS FOR ADDITIONAL INFORMAITON
11. (N) LANDSCAPING. SEE LANDSCAPE DRAWINGS FOR ADDITIONAL INFORMATION
12. (N) CONCRETE WALKWAY. SEE CIVIL DRAWINGS FOR ADDITIONAL INFORMATION
13. (N) HORSESHOE PIT. SEE LANDSCAPE DWGS FOR ADDITIONAL INFORMATION
14. (N) 18" TALL BLOCK SEATWALL W/ STUCCO FINISH. SEE LANDSCAPE DWGS FOR ADDITIONAL INFORMATION
15. (N) STANDARD ACCESSIBLE TRASH ENCLOSURE FOR (E) SENIOR CITIZENS CENTER PER CITY OF RIDGECREST ENGINEER DESIGN STANDARDS PLATE NO. M-1. SEE A1.10 FOR ADDITIONAL INFORMATION
16. 8" WIDE CONCRETE BAND. SEE LANDSCAPE DRAWINGS FOR ADDITIONAL INFORMATION

AGENCY

REVIEWED FOR CODE COMPLIANCE BY: WILLDAN ENGINEERING

Approval of these plans & specifications shall not be construed to be a permit for, or an approval of any violation of any Federal, State, County or City laws or ordinances. One set of approved plans must be kept on the job until completion.

9:23:45 AM Jul 21, 2025

FLEWELLING & MOODY
architecture planning interiors

HEADQUARTERS OFFICE:
99 S. Lake Avenue, Suite 300
Pasadena, CA 91101
Phone: 323.543.8300
E-Mail: fm-pasadena@flewelling-moody.com

ANTELOPE VALLEY OFFICE:
1035 West Lancaster Bouldvard
Lancaster, California 93534
Phone: 661.949.0771
E-Mail: fm-lancaster@flewelling-moody.com

An Employee Owned Corporation

ARCHITECT

LICENSED ARCHITECT — MATTHEW T. GARDNER — C-14211 — 06/30/2025 — STATE OF CALIFORNIA

CONSULTANT

Drawn by: Author
Check by: Checker
Revisions

No.	Date	Description

All dimensions must be checked at the job by the contractor who accepts full responsibility for their accuracy under the contract. These plans & the specifications in connection therewith have been prepared for a specific site. Any and all responsibility for their use in whole or in part on any other site is hereby disclaimed by Flewelling & Moody.

CITY OF RIDGECREST

SGT. JOHN PINNEY MEMORIAL POOL REPLACEMENT PROJECT

205 S WARNER ST, RIDGECREST, CA 93555

Drawing Title

ENLARGED SITE PLANS

Job No. 3055-0100

Sheet No. **A1.07**

Date 07/14/2025

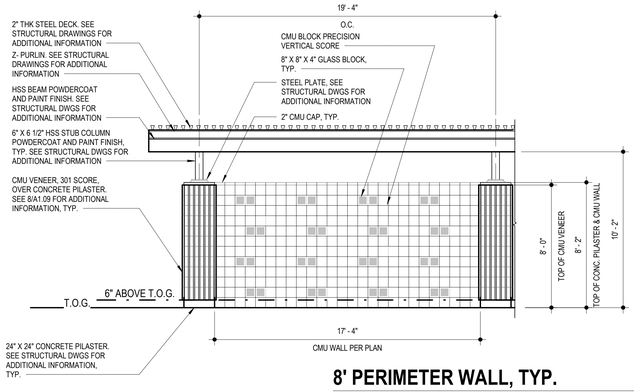

8' PERIMETER WALL, TYP.

SCALE: 1/4" = 1'-0"

8 / A1.08

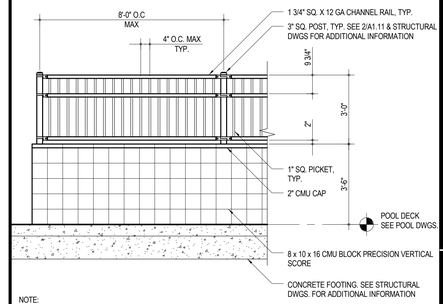

NOTE:
SYSTEM DESCRIPTION SEE PRODUCT SPECS

TUBE STEEL FENCE PANEL O/ CMU LOW WALL TYP.

SCALE: 3/8" = 1'-0"

4 / A1.08

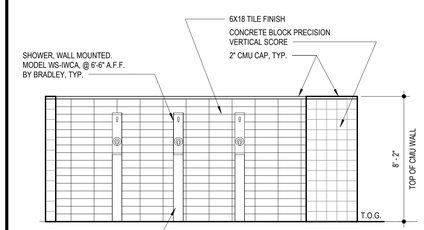

EXTERIOR SHOWERS ELEVATION

SCALE: 1/4" = 1'-0"

7 / A1.08

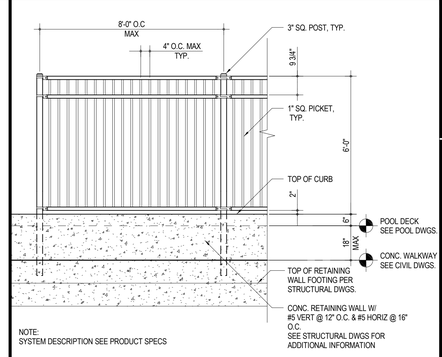

NOTE:
SYSTEM DESCRIPTION SEE PRODUCT SPECS

TUBE STEEL FENCE O/ RETAINING WALL

SCALE: 3/8" = 1'-0"

3 / A1.08

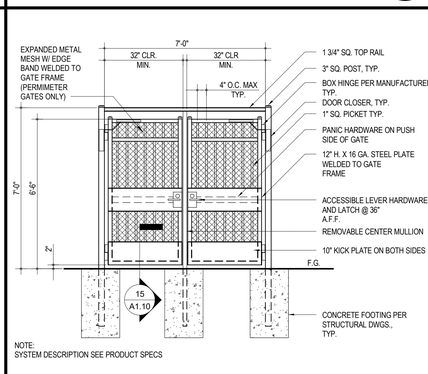

NOTE:
SYSTEM DESCRIPTION SEE PRODUCT SPECS

DOUBLE SWING TUBE STEEL GATE TYP.

SCALE: 3/8" = 1'-0"

6 / A1.08

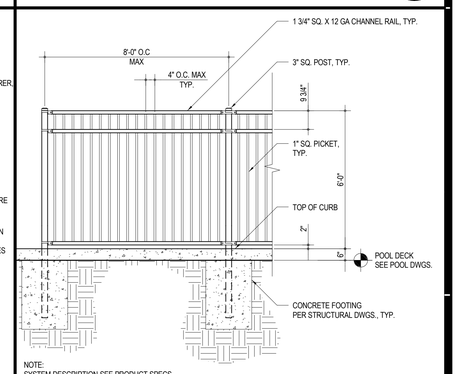

NOTE:
SYSTEM DESCRIPTION SEE PRODUCT SPECS

TUBE STEEL FENCE OVER CURB TYP.

SCALE: 3/8" = 1'-0"

2 / A1.08

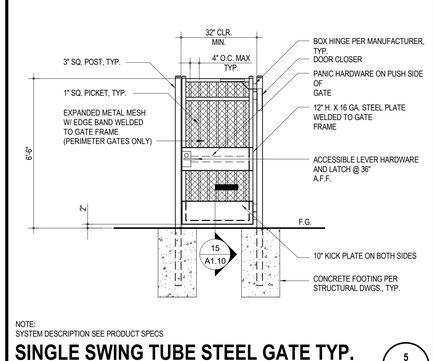

NOTE:
SYSTEM DESCRIPTION SEE PRODUCT SPECS

SINGLE SWING TUBE STEEL GATE TYP.

SCALE: 3/8" = 1'-0"

5 / A1.08

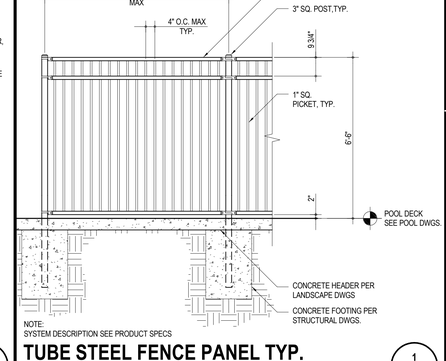

NOTE:
SYSTEM DESCRIPTION SEE PRODUCT SPECS

TUBE STEEL FENCE PANEL TYP.

SCALE: 3/8" = 1'-0"

1 / A1.08

AGENCY

REVIEWED FOR CODE COMPLIANCE BY: WILLDAN ENGINEERING

Approval of these plans & specifications shall not be construed to be a permit for, or an approval of any violation of any Federal, State, County or City laws or ordinances. One set of approved plans must be kept on the job until completion.

9:23:47 AM Jul 21, 2025

FLEWELLING & MOODY
architecture planning interiors

HEADQUARTERS OFFICE:
99 S. Lake Avenue, Suite 300
Pasadena, CA 91101
Phone: 323.543.8300
E-Mail: fm-pasadena@flewelling-moody.com

ANTELOPE VALLEY OFFICE:
1035 West Lancaster Boulevard
Lancaster, California 93534
Phone: 661.949.0771
E-Mail: fm-lancaster@flewelling-moody.com

An Employee Owned Corporation

ARCHITECT

LICENSED ARCHITECT — MATTHEW T. GARDNER — C-14211 — 06/30/2026 — STATE OF CALIFORNIA

CONSULTANT

Drawn by: Author

Check by: Checker

Revisions

No.	Date	Description

All dimensions must be checked at the job by the contractor who accepts full responsibility for their accuracy under the contract. These plans & the specifications in connection therewith have been prepared for a specific site. Any and all responsibility for their use in whole or in part on any other site is hereby disclaimed by Flewelling & Moody.

CITY OF RIDGECREST

SGT. JOHN PINNEY MEMORIAL POOL REPLACEMENT PROJECT

205 S WARNER ST, RIDGECREST, CA 93555

Drawing Title

SITE ELEVATIONS

Job No. 3055-0100

Date 07/14/2025

Sheet No. **A1.08**

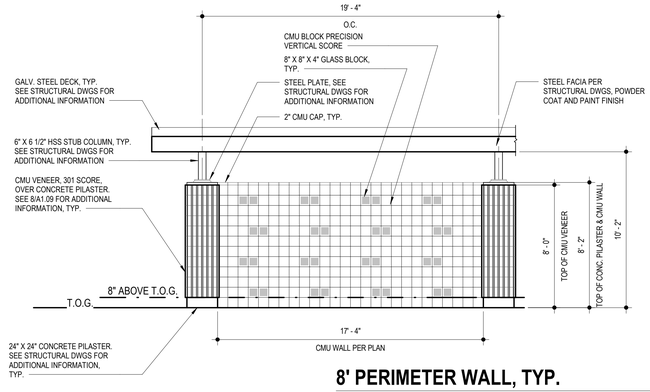

8' PERIMETER WALL, TYP.

SCALE: 1/4" = 1'-0"

8 / A1.08A6

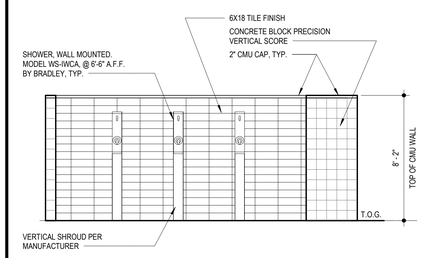

EXTERIOR SHOWERS ELEVATION

SCALE: 1/4" = 1'-0"

7 / A1.08A6

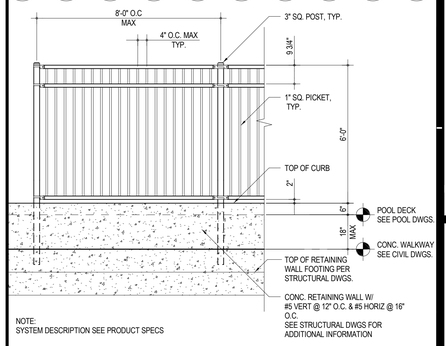

TUBE STEEL FENCE O/ RETAINING WALL

SCALE: 3/8" = 1'-0"

3 / A1.08A6

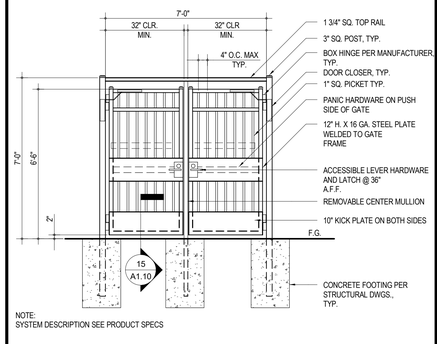

DOUBLE SWING TUBE STEEL GATE TYP.

SCALE: 3/8" = 1'-0"

6 / A1.08A6

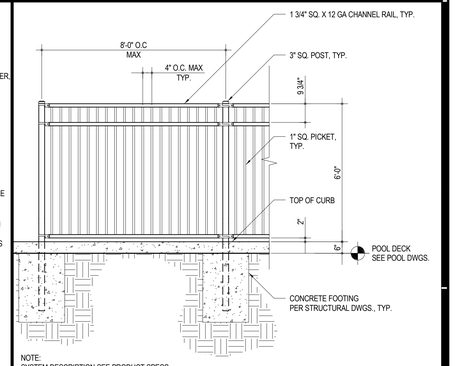

TUBE STEEL FENCE OVER CURB TYP.

SCALE: 3/8" = 1'-0"

2 / A1.08A6

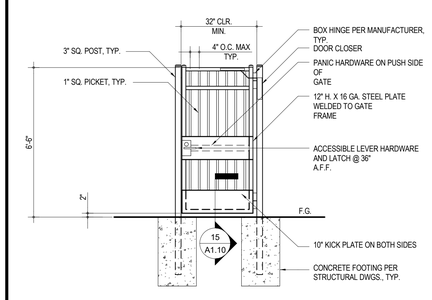

SINGLE SWING TUBE STEEL GATE TYP.

SCALE: 3/8" = 1'-0"

5 / A1.08A6

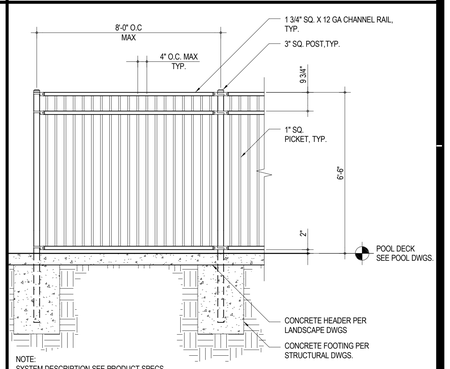

TUBE STEEL FENCE PANEL TYP.

SCALE: 3/8" = 1'-0"

1 / A1.08A6

AGENCY

FLEWELLING & MOODY
architecture planning interiors

HEADQUARTERS OFFICE:
99 S. Lake Avenue, Suite 300
Pasadena, CA 91101
Phone: 323.543.8300
E-Mail: fm-pasadena@flewelling-moody.com

ANTELOPE VALLEY OFFICE:
1035 West Lancaster Boulevard
Lancaster, California 93534
Phone: 661.949.0771
E-Mail: fm-lancaster@flewelling-moody.com

An Employee Owned Corporation

ARCHITECT

LICENSED ARCHITECT — MATT T. GARDNER — C-14211 — 08/31/2025 — STATE OF CALIFORNIA

CONSULTANT

Drawn by: Author

Check by: Checker

Revisions

No.	Date	Description
1	08/27/2025	BID ALTERNATE

All dimensions must be checked at the job by the contractor who accepts full responsibility for their accuracy under the contract. These plans & the specifications in connection therewith have been prepared for a specific site. Any and all responsibility for their use in whole or in part on any other site is hereby disclaimed by Flewelling & Moody.

CITY OF RIDGECREST

SGT. JOHN PINNEY MEMORIAL POOL REPLACEMENT PROJECT

205 S WARNER ST, RIDGECREST, CA 93555

Drawing Title

SITE ELEVATIONS ALT 6

Job No. 3055-0100

Sheet No. **A1.08A6**

Date 12/20/2024

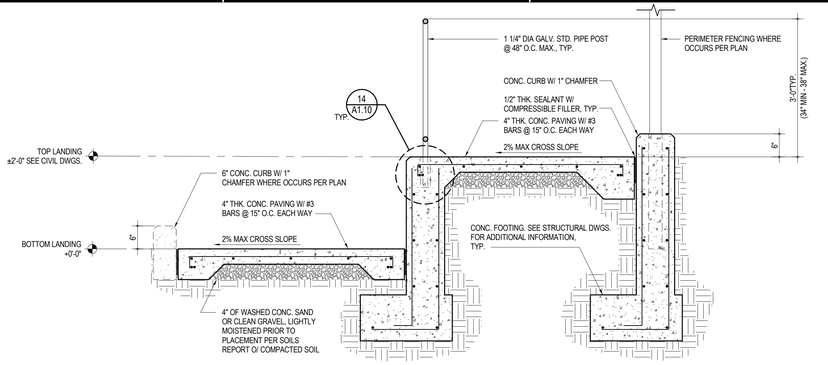

NOTES:
1. ALL PIPE RAILING SHALL BE HOT-DIPPED GALVANIZED.
2. GRIND SMOOTH ALL WELDS WITH SHARP EDGES AND CORNERS.

TYP. RAMP SECTION

SCALE: 3/4" = 1'-0"

4 / A1.09

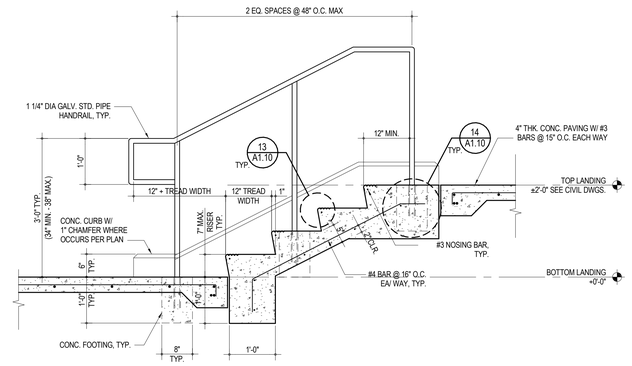

NOTES:
1. ALL STEPS SHALL HAVE UNIFORM RISER HEIGHTS AND UNIFORM TREAD DEPTHS.
2. ALL PIPE RAILING SHALL BE HOT-DIPPED GALVANIZED.
3. GRIND SMOOTH ALL WELDS WITH SHARP EDGES AND CORNERS.

TYP. STAIR SECTION

SCALE: 3/4" = 1'-0"

3 / A1.09

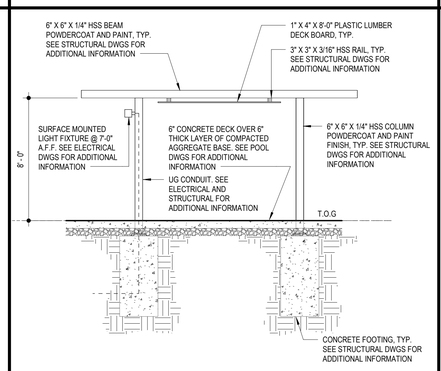

COVERED WALKWAY SECTION

SCALE: 1/4" = 1'-0"

6 / A1.09

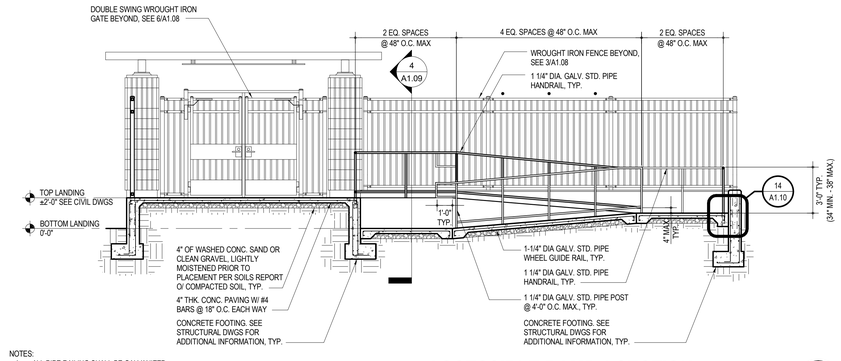

NOTES:
1. ALL PIPE RAILING SHALL BE GALVANIZED.
2. GRIND SMOOTH ALL WELDS WITH SHARP EDGES AND CORNERS.

ACCESSIBLE RAMP 1 SECTION

SCALE: 1/4" = 1'-0"

2 / A1.09

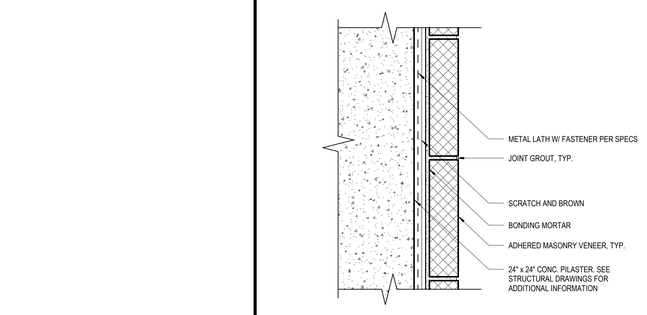

TYP. CONCRETE PILASTER W/ MASONRY VENEER SECTION

SCALE: 3" = 1'-0"

8 / A1.09

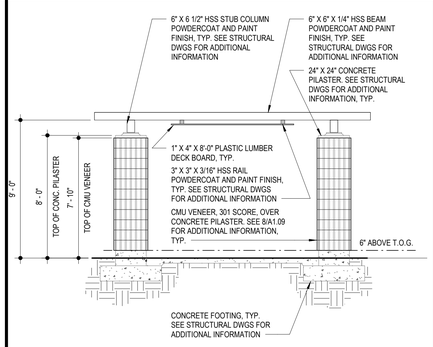

COVERED ENTRANCE SECTION

SCALE: 1/4" = 1'-0"

5 / A1.09

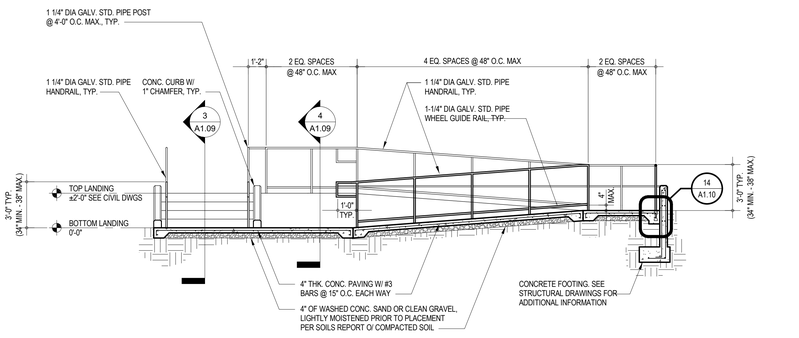

NOTES:
1. ALL PIPE RAILING SHALL BE GALVANIZED.
2. GRIND SMOOTH ALL WELDS WITH SHARP EDGES AND CORNERS.

ACCESSIBLE RAMP 2 SECTION

SCALE: 1/4" = 1'-0"

1 / A1.09

AGENCY

REVIEWED FOR CODE COMPLIANCE BY: WILLDAN ENGINEERING

Approval of these plans & specifications shall not be construed to be a permit for, or an approval of any violation of any Federal, State, County or City laws or ordinances. One set of approved plans must be kept on the job until completion.

9:23:48 AM Jul 21, 2025

FLEWELLING & MOODY
architecture planning interiors

HEADQUARTERS OFFICE:
99 S. Lake Avenue, Suite 300
Pasadena, CA 91101
Phone: 323.543.8300
E-Mail: fm-pasadena@flewelling-moody.com

ANTELOPE VALLEY OFFICE:
1035 West Lancaster Bouldvard
Lancaster, California 93534
Phone: 661.949.0771
E-Mail: fm-lancaster@flewelling-moody.com

An Employee Owned Corporation

ARCHITECT

LICENSED ARCHITECT — MATT T. GARDNER — C-14211 — 06/30/2025 — STATE OF CALIFORNIA

CONSULTANT

Drawn by: Author

Check by: Checker

Revisions

No.	Date	Description

All dimensions must be checked at the job by the contractor who accepts full responsibility for their accuracy under the contract. These plans & the specifications in connection therewith have been prepared for a specific site. Any and all responsibility for their use in whole or in part on any other site is hereby disclaimed by Flewelling & Moody.

CITY OF RIDGECREST

SGT. JOHN PINNEY MEMORIAL POOL REPLACEMENT PROJECT

205 S WARNER ST, RIDGECREST, CA 93555

Drawing Title

SITE SECTIONS

Job No. 3055-0100

Date 07/14/2025

Sheet No. A1.09

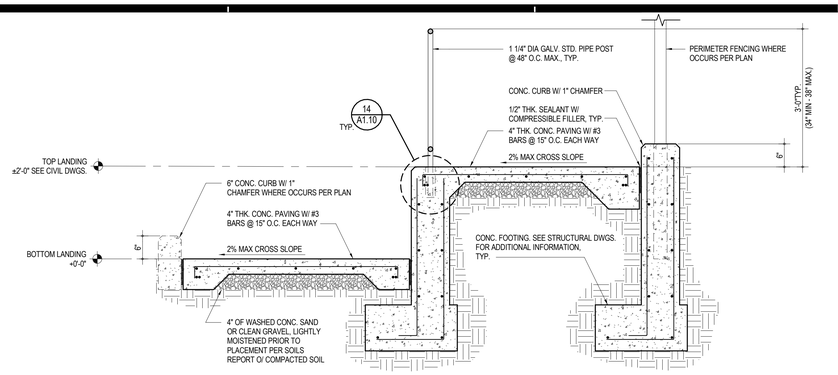

NOTES:
1. ALL PIPE RAILING SHALL BE HOT-DIPPED GALVANIZED.
2. GRIND SMOOTH ALL WELDS WITH SHARP EDGES AND CORNERS.

TYP. RAMP SECTION

SCALE: 3/4" = 1'-0"

4 A1.09A2

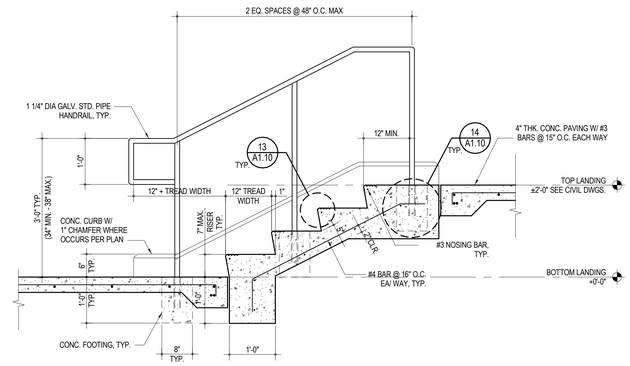

NOTES:
1. ALL STEPS SHALL HAVE UNIFORM RISER HEIGHTS AND UNIFORM TREAD DEPTHS.
2. ALL PIPE RAILING SHALL BE HOT-DIPPED GALVANIZED.
3. GRIND SMOOTH ALL WELDS WITH SHARP EDGES AND CORNERS.

TYP. STAIR SECTION

SCALE: 3/4" = 1'-0"

3 A1.09A2

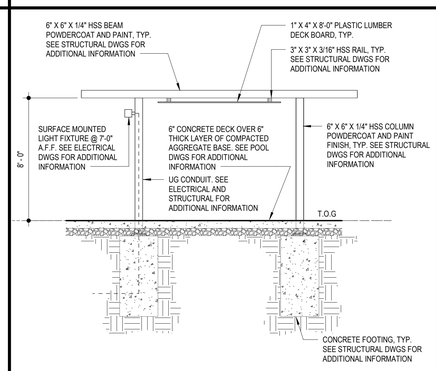

COVERED WALKWAY SECTION

SCALE: 1/4" = 1'-0"

6 A1.09A2

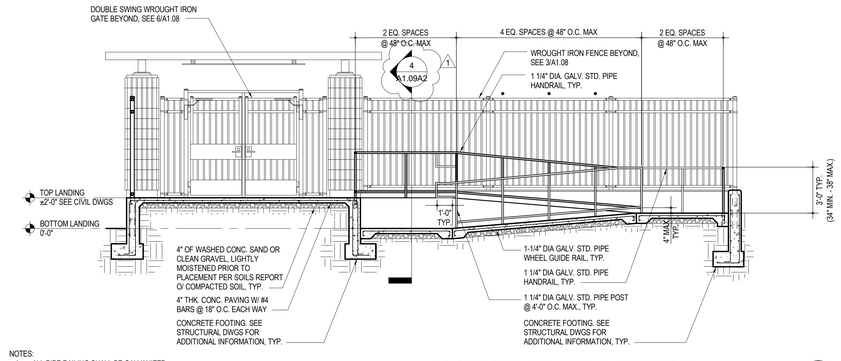

NOTES:
1. ALL PIPE RAILING SHALL BE GALVANIZED.
2. GRIND SMOOTH ALL WELDS WITH SHARP EDGES AND CORNERS.

ACCESSIBLE RAMP 1 SECTION

SCALE: 1/4" = 1'-0"

2 A1.09A2

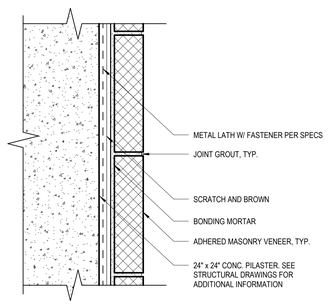

TYP. CONCRETE PILASTER W/ MASONRY VENEER SECTION

SCALE: 3" = 1'-0"

8 A1.09A2

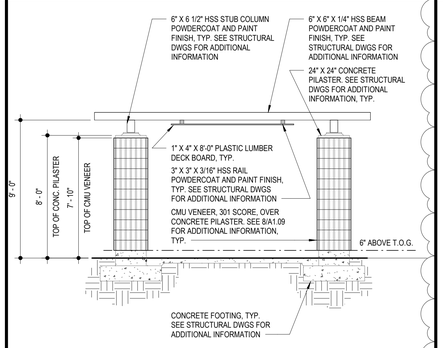

COVERED ENTRANCE SECTION

SCALE: 1/4" = 1'-0"

5 A1.09A2

AGENCY

FLEWELLING & MOODY
architecture planning interiors

HEADQUARTERS OFFICE:
99 S. Lake Avenue, Suite 300
Pasadena, CA 91101
Phone: 323.543.8300
E-Mail: fm-pasadena@flewelling-moody.com

ANTELOPE VALLEY OFFICE:
1035 West Lancaster Boulevard
Lancaster, California 93534
Phone: 661.949.0771
E-Mail: fm-lancaster@flewelling-moody.com

An Employee Owned Corporation

ARCHITECT

LICENSED ARCHITECT MATT T. CARD C-14211 06/30/2025 STATE OF CALIFORNIA

CONSULTANT

Drawn by: Author

Check by: Checker

Revisions

No.	Date	Description
1	08/27/2025	BID ALTERNATE

All dimensions must be checked at the job by the contractor who accepts full responsibility for their accuracy under the contract. These plans & the specifications in connection therewith have been prepared for a specific site. Any and all responsibility for their use in whole or in part on any other site is hereby disclaimed by Flewelling & Moody.

CITY OF RIDGECREST

SGT. JOHN PINNEY MEMORIAL POOL REPLACEMENT PROJECT

205 S WARNER ST, RIDGECREST, CA 93555

Drawing Title

SITE SECTIONS ALT 2

Job No. 3055-0100

Sheet No. **A1.09A2**

Date 12/20/2024

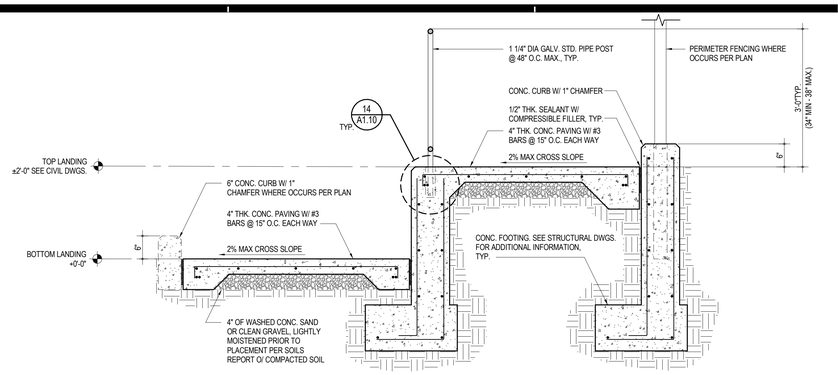

NOTES:
1. ALL PIPE RAILING SHALL BE HOT-DIPPED GALVANIZED.
2. GRIND SMOOTH ALL WELDS WITH SHARP EDGES AND CORNERS.

TYP. RAMP SECTION

SCALE: 3/4" = 1'-0"

4 / A1.09A3

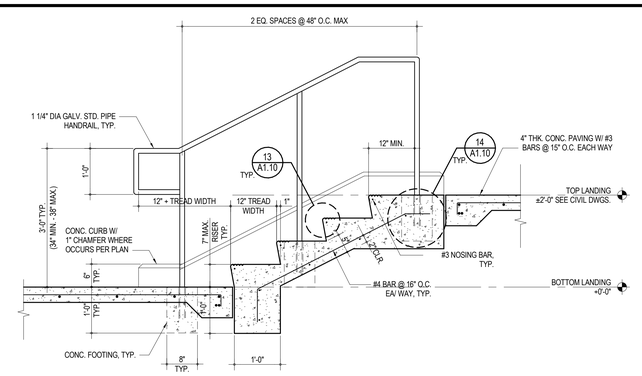

NOTES:
1. ALL STEPS SHALL HAVE UNIFORM RISER HEIGHTS AND UNIFORM TREAD DEPTHS.
2. ALL PIPE RAILING SHALL BE HOT-DIPPED GALVANIZED.
3. GRIND SMOOTH ALL WELDS WITH SHARP EDGES AND CORNERS.

TYP. STAIR SECTION

SCALE: 3/4" = 1'-0"

3 / A1.09A3

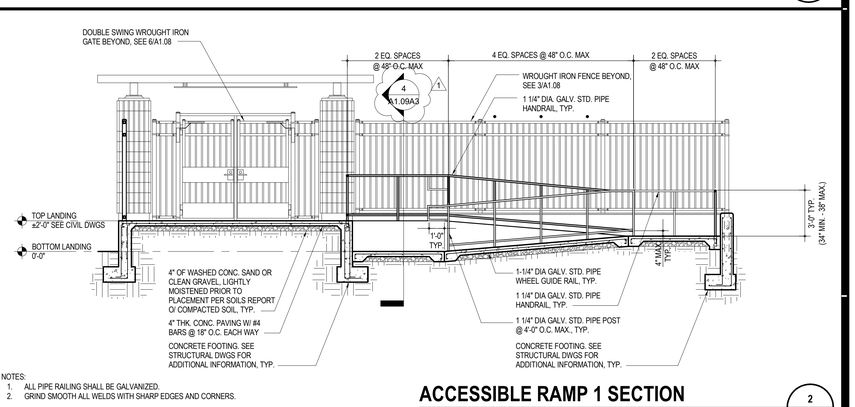

NOTES:
1. ALL PIPE RAILING SHALL BE GALVANIZED.
2. GRIND SMOOTH ALL WELDS WITH SHARP EDGES AND CORNERS.

ACCESSIBLE RAMP 1 SECTION

SCALE: 1/4" = 1'-0"

2 / A1.09A3

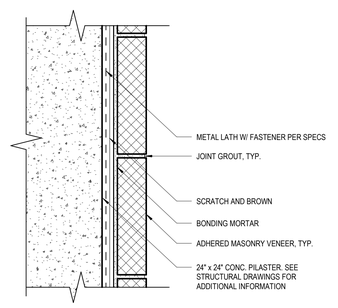

TYP. CONCRETE PILASTER W/ MASONRY VENEER SECTION

SCALE: 3" = 1'-0"

8 / A1.09A3

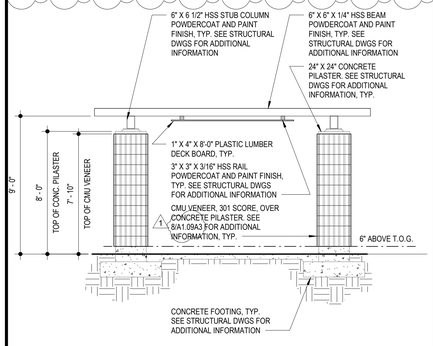

COVERED ENTRANCE SECTION

SCALE: 1/4" = 1'-0"

5 / A1.09A3

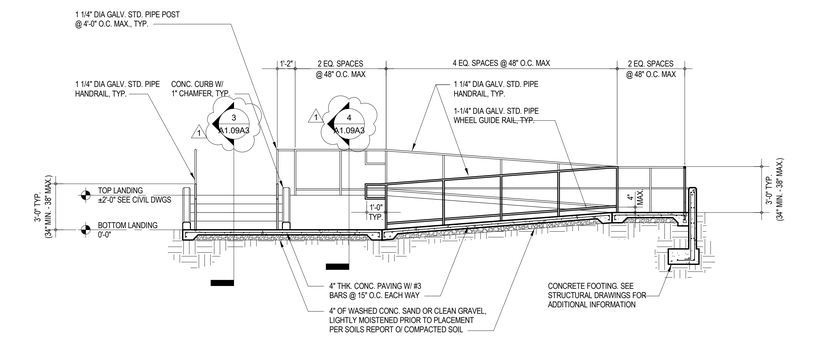

NOTES:
1. ALL PIPE RAILING SHALL BE GALVANIZED.
2. GRIND SMOOTH ALL WELDS WITH SHARP EDGES AND CORNERS.

ACCESSIBLE RAMP 2 SECTION

SCALE: 1/4" = 1'-0"

1 / A1.09A3

AGENCY

FLEWELLING & MOODY
architecture planning interiors

HEADQUARTERS OFFICE:
99 S. Lake Avenue, Suite 300
Pasadena, CA 91101
Phone: 323.543.8300
E-Mail: fm-pasadena@flewelling-moody.com

ANTELOPE VALLEY OFFICE:
1035 West Lancaster Bouldvard
Lancaster, California 93534
Phone: 661.949.0771
E-Mail: fm-lancaster@flewelling-moody.com

An Employee Owned Corporation

ARCHITECT



CONSULTANT

Drawn by: Author
Check by: Checker

Revisions

No.	Date	Description
1	08/27/2025	BID ALTERNATE

All dimensions must be checked at the job by the contractor who accepts full responsibility for their accuracy under the contract. These plans & the specifications in connection therewith have been prepared for a specific site. Any and all responsibility for their use in whole or in part on any other site is hereby disclaimed by Flewelling & Moody.

CITY OF RIDGECREST

SGT. JOHN PINNEY MEMORIAL POOL REPLACEMENT PROJECT

205 S WARNER ST, RIDGECREST, CA 93555

Drawing Title

SITE SECTIONS ALT 3

Job No. 3055-0100

Date 12/20/2024

Sheet No. **A1.09A3**

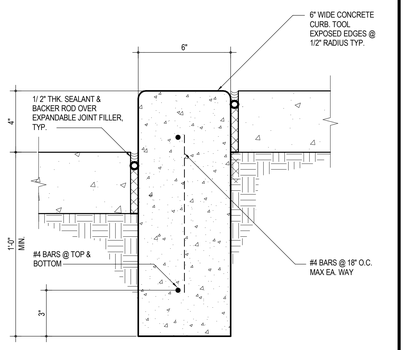

6" WIDE CONCRETE CURB

SCALE: 3" = 1'-0"

20 A1.10

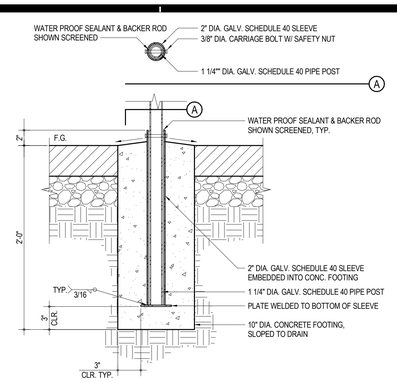

REMOVABLE POST SLEEVE

SCALE: 1 1/2" = 1'-0"

16 A1.10

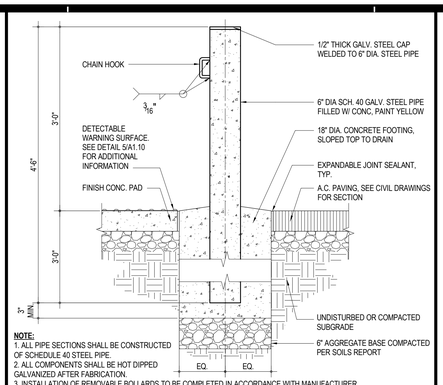

NOTE:
1. ALL PIPE SECTIONS SHALL BE CONSTRUCTED OF SCHEDULE 40 STEEL PIPE.
2. ALL COMPONENTS SHALL BE HOT DIPPED GALVANIZED AFTER FABRICATION.
3. INSTALLATION OF REMOVABLE BOLLARDS TO BE COMPLETED IN ACCORDANCE WITH MANUFACTURER.

FIXED PEDESTRIAN STEEL BOLLARD

SCALE: 1" = 1'-0"

12 A1.10

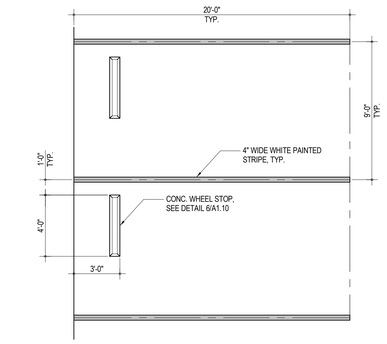

PARKING STALL STANDARD, TYP.

SCALE: 1/4" = 1'-0"

8 A1.10

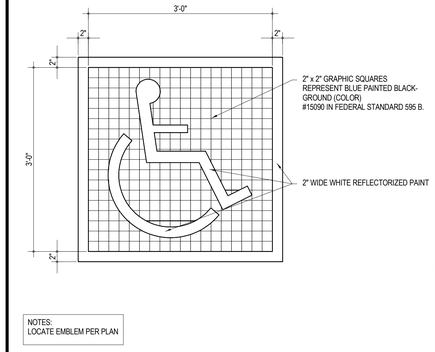

NOTES:
LOCATE EMBLEM PER PLAN

ACCESSIBLE PARKING SYMBOL

SCALE: 1" = 1'-0"

4 A1.10

APPROVED BY:	STANDARD ACCESSIBLE TRASH ENCLOSURE	SCALE: NTS
CITY ENGINEER		CHECKED BY: RG
APPROVED BY CITY COUNCIL:		DATE: 3/22/2021
DATE		PLATE NO: M—1

TYP. ACCESSIBLE TRASH ENCLOSURE

SCALE: 3" = 1'-0"

17 A1.10

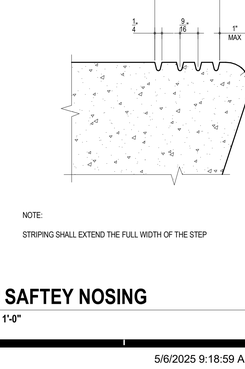

KICKPLATE @ WROUGH IRON GATE

SCALE: 3" = 1'-0"

15 A1.10

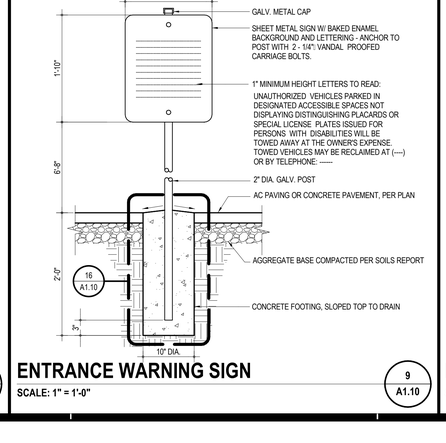

VAN ACC PARKING SIGN

SCALE: 1" = 1'-0"

11 A1.10

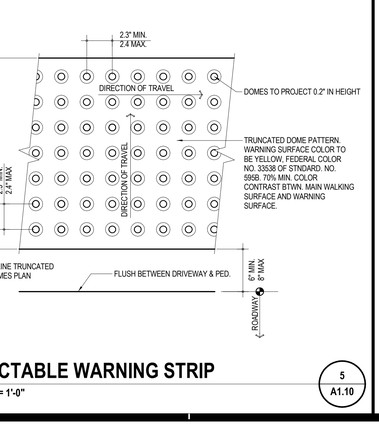

DIRECTIONAL ARROW

SCALE: 1/4" = 1'-0"

7 A1.10

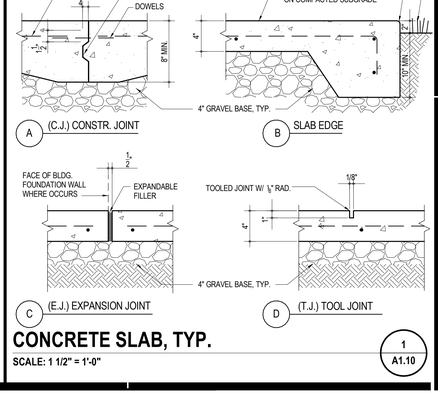

(N) CURB @ AC PAVED ROAD

SCALE: 1 1/2" = 1'-0"

3 A1.10

APPROVED BY:	TRASH ENCLOSURE ROOF	SCALE: NTS
CITY ENGINEER		CHECKED BY: RG
APPROVED BY CITY COUNCIL:		DATE: 3/22/2021
DATE		PLATE NO: M—3

HANDRAIL SLEEVE

SCALE: 3" = 1'-0"

14 A1.10

ACCESSIBLE PARKING SIGN

SCALE: 1" = 1'-0"

10 A1.10

CONCRETE WHEEL STOP

SCALE: 1" = 1'-0"

6 A1.10

CONC SLAB EDGE TO AC, TYP.

SCALE: 1 1/2" = 1'-0"

2 A1.10

NOTE:

STRIPING SHALL EXTEND THE FULL WIDTH OF THE STEP

STAIR SAFTEY NOSING

SCALE: 6" = 1'-0"

13 A1.10

ENTRANCE WARNING SIGN

SCALE: 1" = 1'-0"

9 A1.10

DETECTABLE WARNING STRIP

SCALE: 3" = 1'-0"

5 A1.10

CONCRETE SLAB, TYP.

SCALE: 1 1/2" = 1'-0"

1 A1.10

AGENCY

REVIEWED FOR CODE COMPLIANCE BY: WILLDAN ENGINEERING

Approval of these plans & specifications shall not be construed to be a permit for, or an approval of any violation of any Federal, State, County or City laws or ordinances. One set of approved plans must be kept on the job until completion.

9:23:50 AM Jul 21, 2025

FLEWELLING & MOODY
architecture planning interiors

HEADQUARTERS OFFICE:
99 S. Lake Avenue, Suite 300
Pasadena, CA 91101
Phone: 323.543.8300
E-Mail: fm-pasadena@flewelling-moody.com

ANTELOPE VALLEY OFFICE:
1035 West Lancaster Boulevard
Lancaster, California 93534
Phone: 661.949.0771
E-Mail: fm-lancaster@flewelling-moody.com

An Employee Owned Corporation

ARCHITECT

LICENSED ARCHITECT — MATTHEW T. GRABB — C-14211 — 06/30/2026 — STATE OF CALIFORNIA

CONSULTANT

Drawn by: Author
Check by: Checker
Revisions

No.	Date	Description

All dimensions must be checked at the job by the contractor who accepts full responsibility for their accuracy under the contract. These plans & the specifications in connection therewith have been prepared for a specific site. Any and all responsibility for their use in whole or in part on any other site is hereby disclaimed by Flewelling & Moody.

CITY OF RIDGECREST

SGT. JOHN PINNEY MEMORIAL POOL REPLACEMENT PROJECT

205 S WARNER ST, RIDGECREST, CA 93555

Drawing Title

SITE DETAILS

Job No. 3055-0100

Sheet No. **A1.10**

Date 07/14/2025

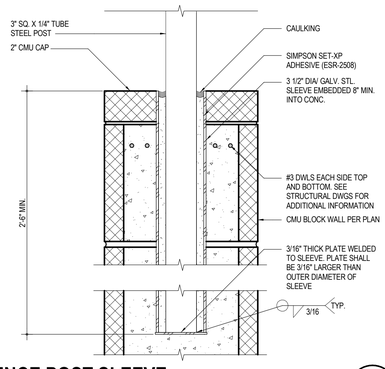

FENCE POST SLEEVE

SCALE: 3" = 1'-0"

2
A1.11

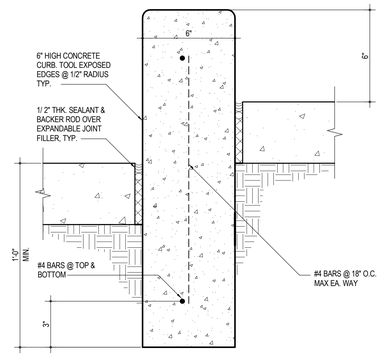

6" CONC. CURB

SCALE: 3" = 1'-0"

1
A1.11

AGENCY

REVIEWED FOR CODE COMPLIANCE BY: WILLDAN ENGINEERING

Approval of these plans & specifications shall not be construed to be a permit for, or an approval of any violation of any Federal, State, County or City laws or ordinances. One set of approved plans must be kept on the job until completion.

9:23:51 AM Jul 21, 2025

FLEWELLING & MOODY
architecture planning interiors

HEADQUARTERS OFFICE:

99 S. Lake Avenue, Suite 300
Pasadena, CA 91101
Phone: 323.543.8300
E-Mail: fm-pasadena@flewelling-moody.com

ANTELOPE VALLEY OFFICE:

1035 West Lancaster Bouldvard
Lancaster, California 93534
Phone: 661.949.0771
E-Mail: fm-lancaster@flewelling-moody.com

An Employee Owned Corporation

ARCHITECT



CONSULTANT

Drawn by: Author

Check by: Checker

Revisions

No.	Date	Description

All dimensions must be checked at the job by the contractor who accepts full responsibility for their accuracy under the contract. These plans & the specifications in connection therewith have been prepared for a specific site. Any and all responsibility for their use in whole or in part on any other site is hereby disclaimed by Flewelling & Moody.

CITY OF RIDGECREST

SGT. JOHN PINNEY MEMORIAL POOL REPLACEMENT PROJECT

205 S WARNER ST, RIDGECREST, CA 93555

Drawing Title

SITE DETAILS

Job No. 3055-0100

Date 07/14/2025

Sheet No. **A1.11**

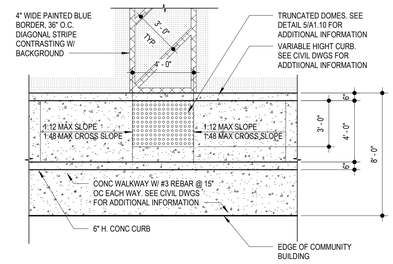

TYP. PARALLEL CURB RAMP

SCALE: 1/4" = 1'-0"

2
A1.11A4

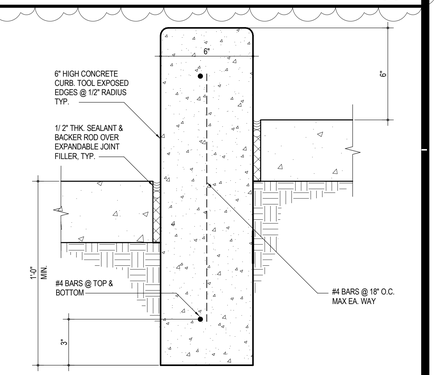

6" CONC. CURB

SCALE: 3" = 1'-0"

1
A1.11A4

AGENCY

FLEWELLING & MOODY
architecture planning interiors

HEADQUARTERS OFFICE:
99 S. Lake Avenue, Suite 300
Pasadena, CA 91101
Phone: 323.543.8300
E-Mail: fm-pasadena@flewelling-moody.com

ANTELOPE VALLEY OFFICE:
1035 West Lancaster Bouldvard
Lancaster, California 93534
Phone: 661.949.0771
E-Mail: fm-lancaster@flewelling-moody.com

An Employee Owned Corporation

ARCHITECT

LICENSED ARCHITECT
C-14211
Exp. date: 08/31/2025
STATE OF CALIFORNIA

CONSULTANT

Drawn by: Author
Check by: Checker

Revisions

No.	Date	Description
1	08/27/2025	BID ALTERNATE

All dimensions must be checked at the job by the contractor who accepts full responsibility for their accuracy under the contract. These plans & the specifications in connection therewith have been prepared for a specific site. Any and all responsibility for their use in whole or in part on any other site is hereby disclaimed by Flewelling & Moody.

CITY OF RIDGECREST

SGT. JOHN PINNEY MEMORIAL POOL REPLACEMENT PROJECT

205 S WARNER ST, RIDGECREST, CA 93555

Drawing Title

SITE DETAILS ALT 4

Job No. 3055-0100

Date 12/20/2024

Sheet No. **A1.11A4**

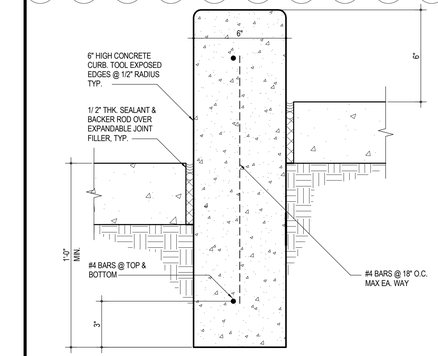

6" CONC. CURB

SCALE: 3" = 1'-0"

1
A1.11A6

AGENCY

FLEWELLING & MOODY
architecture planning interiors

HEADQUARTERS OFFICE:
99 S. Lake Avenue, Suite 300
Pasadena, CA 91101
Phone: 323.543.8300
E-Mail: fm-pasadena@flewelling-moody.com

ANTELOPE VALLEY OFFICE:
1035 West Lancaster Bouldvard
Lancaster, California 93534
Phone: 661.949.0771
E-Mail: fm-lancaster@flewelling-moody.com

An Employee Owned Corporation

ARCHITECT

LICENSED ARCHITECT
SCOTT F. GAUDINGER
C-14211
Exp. Date: 08/31/2025
STATE OF CALIFORNIA

CONSULTANT

Drawn by: Author
Check by: Checker

Revisions

No.	Date	Description
1	08/27/2025	BID ALTERNATE

All dimensions must be checked at the job by the contractor who accepts full responsibility for their accuracy under the contract. These plans & the specifications in connection therewith have been prepared for a specific site. Any and all responsibility for their use in whole or in part on any other site is hereby disclaimed by Flewelling & Moody.

CITY OF RIDGECREST

SGT. JOHN PINNEY MEMORIAL POOL REPLACEMENT PROJECT

205 S WARNER ST, RIDGECREST, CA 93555

Drawing Title

SITE DETAILS ALT 6

Job No. 3055-0100

Date 12/20/2024

Sheet No. **A1.11A6**

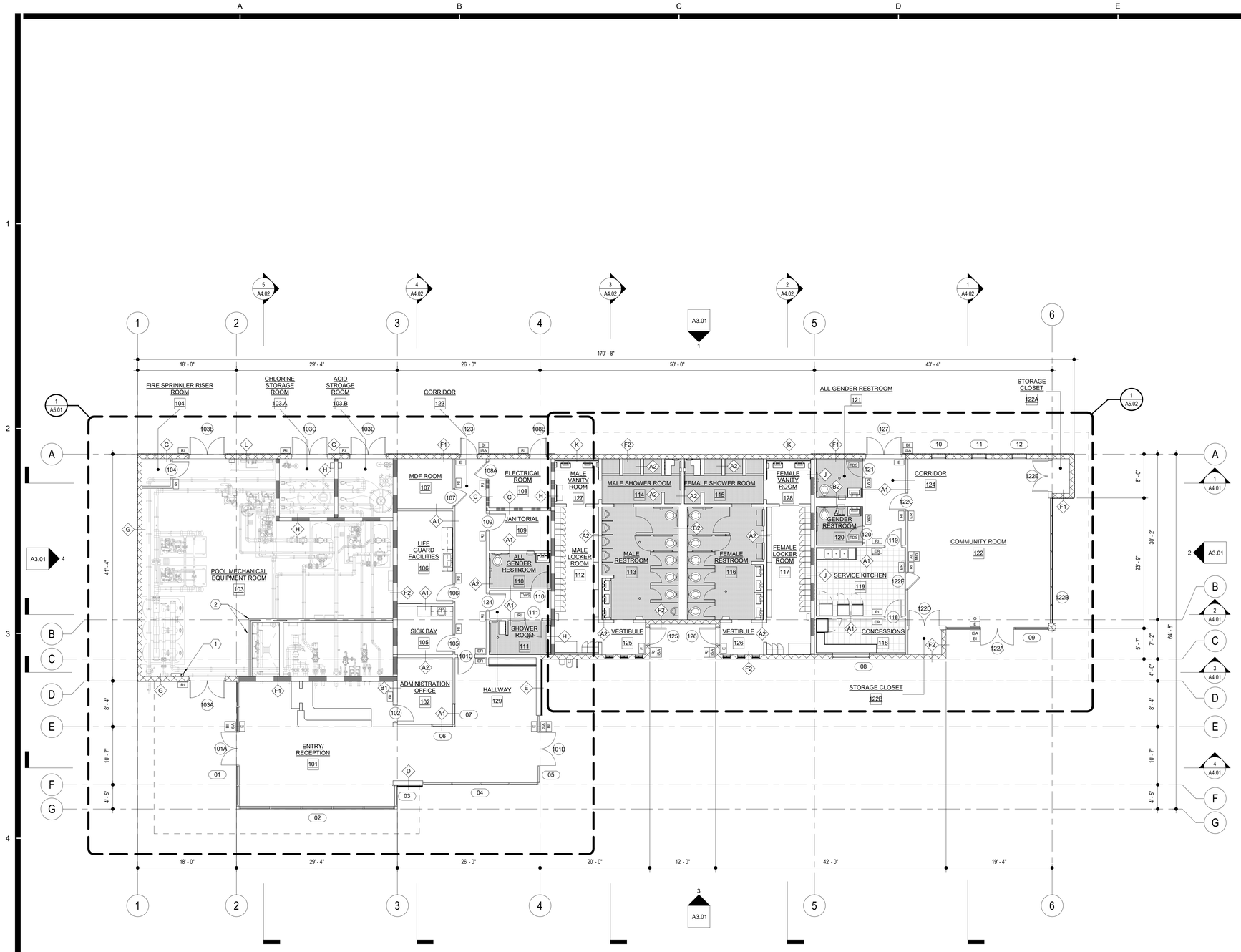

OVERALL FLOOR PLAN

SCALE: 1/8" = 1'-0"

1 / A2.01

GENERAL NOTES

1. REFER TO STRUCTURAL, MECHANICAL, PLUMBING, AND ELECTRICAL DRAWINGS FOR ADDITIONAL APPLICABLE SCOPE OF WORK.

2. CONTRACTOR SHALL VERIFY ALL CONDITIONS PRIOR TO CONSTRUCTION. IF THERE ARE ANY CONFLICTS BETWEEN THESE DOCUMENTS OR BETWEEN THESE DOCUMENTS AND THAT OF OTHER DESIGN TEAM CONSULTANTS, PLEASE NOTIFY THE ARCHITECT IN WRITING, IDENTIFYING THE AREAS IN QUESTION PRIOR TO INSTALLATION OR CONSTRUCTION.

3. DO NOT SCALE THE DRAWINGS. ONLY WRITTEN DIMENSIONS SHALL BE USED. UNLESS OTHERWISE NOTED, THE FOLLOWING DIMENSIONING CRITERIA SHALL BE USED:
   A. FOR GYPSUM BOARD (GWB) AND METAL/WOOD STUD WALL CONSTRUCTION, ALL DIMENSIONS ARE SHOWN TO THE FACE OF STUD. REFER TO THE RESTROOM DRAWINGS FINISH ASSEMBLIES APPLIED TO THE FACE OF GWB ASSEMBLIES.
   B. REFER TO SPECIFIC PARTITION TYPE ON PROJECT PARTITION SCHEDULE FOR DIMESIONS AND FOR ALL UL ASSEMBLY NUMBERS.
   C. DOOR FRAME HINGES ARE LOCATED 4" NOMINALLY OFF THE ADJACENT PERPENDICULAR WALL UNLESS OTHERWISE NOTED. ALL FINAL DOOR LOCATIONS SHALL BE CONFIRMED WITH ARCHITECT.
   D. DIMENSION STRINGS LISTED WITH A +/- INDICATING THAT THESE DIMSNIONS ARE TO BE WITHIN TOLERANCE WHILE DIMENSIONS OF OTHER ITEMS WITHOUT +/- SHALL BE HELD.

4. CONTRACTOR SHALL BE RESPONSIBLE FOR REVIEWING ALL PARTITIONING TAGS AND COORDINATING FINISH REQUIREMENTS, HOLLOW METAL AND WOOD FRAMES, ETC.

5. REFER TO SITE PLAN FOR LOCATION OF COORDINDATES ORIGIN POINT (X:0, Y:0).

6. SEE BUILDING SECTIONS & EXTERIOR ELEVATIONS FOR ROOF LEVELS.

LEGEND

- 2 HR. FIRE RATED WALL
- 1 HR. FIRE RATED WALL
- WOOD STUD WALL
- CMU WALL
- (101) DOOR TYPE, SEE DOOR SCHEDULE ON SHEET A7.01
- (1) WINDOW TYPE, SEE DOOR SCHEDULE ON SHEET A7.01
- TDS TOILET DOOR SYMBOL, SEE DETAIL 5/A8.06
- TWS TOILET ROOM WALL SYMBOL, SEE DETAIL 6/A8.06
- RI ROOM IDENTIFICATION SIGN/ROOM NUMBERS SIGN (ACCESSIBLE), SEE DETAIL 7/A8.06
- E EXIT SIGN (ACCESSIBLE), SEE DETAIL 10/A8.06
- ER EXIT ROUTE SIGN (ACCESSIBLE), SEE DETAIL 11/A8.06
- AL ASSISTIVE LISTENING SIGNAGE, SEE DETAIL 12/A8.06
- MO MAXIMUM OCCUPANCY SIGN, SEE DETAIL 13/A8.06
- ISA INTERNATIONAL SYMBOL OF ACCESSIBILITY, SEE DETAIL 14/A8.06
- BI BUILDING ID. SIGN (ACCESSIBLE), SEE DETAIL 15/A8.06
- O MAXIMUM OCCUPANCY SIGN, SEE DETAIL 13/A8.06
- TILE FLOORING. VERIFY DEPTH OF SLAB DEPRESSION PER MANUFACTURER RECOMMENDATION AS REQUIRED. SEE STRUCTURAL DWGS FOR ADDITIONAL INFORMATION
- X 0' - 0" Y 0' - 0" DATUM POINT
- A1 WALL TAG, SEE A8.01 FOR ADDITIONAL INFORMATION

CONSTRUCTION KEY NOTES

1. ELECTRIC TANKLESS WATER HEATER. SEE PLUMBING DRAWINGS FOR ADDITIONAL INFORMATION
2. CONCRETE RETAINING CURB. SEE AQUATIC AND STRUCTURAL DRAWINGS FOR ADDITIONAL INFORMATION

AGENCY

REVIEWED FOR CODE COMPLIANCE BY: WILLDAN ENGINEERING

Approval of these plans & specifications shall not be construed to be a permit for, or an approval of any violation of any Federal, State, County or City laws or ordinances. One set of approved plans must be kept on the job until completion.

9:23:53 AM Jul 21, 2025

FLEWELLING & MOODY
architecture planning interiors

HEADQUARTERS OFFICE:
99 S. Lake Avenue, Suite 300
Pasadena, CA 91101
Phone: 323.543.8300
E-Mail: fm-pasadena@flewelling-moody.com

ANTELOPE VALLEY OFFICE:
1035 West Lancaster Boulevard
Lancaster, California 93534
Phone: 661.949.0771
E-Mail: fm-lancaster@flewelling-moody.com

An Employee Owned Corporation

ARCHITECT

LICENSED ARCHITECT — MATT T. GABBARD — C-14211 — 06/30/2025 — STATE OF CALIFORNIA

CONSULTANT

Drawn by: Author
Check by: Checker
Revisions

No.	Date	Description

All dimensions must be checked at the job by the contractor who accepts full responsibility for their accuracy under the contract. These plans & the specifications in connection therewith have been prepared for a specific site. Any and all responsibility for their use in whole or in part on any other site is hereby disclaimed by Flewelling & Moody.

CITY OF RIDGECREST

SGT. JOHN PINNEY MEMORIAL POOL REPLACEMENT PROJECT

205 S WARNER ST, RIDGECREST, CA 93555

Drawing Title

OVERALL FLOOR PLAN

Job No. 3055-0100

Sheet No. **A2.01**

Date 07/14/2025

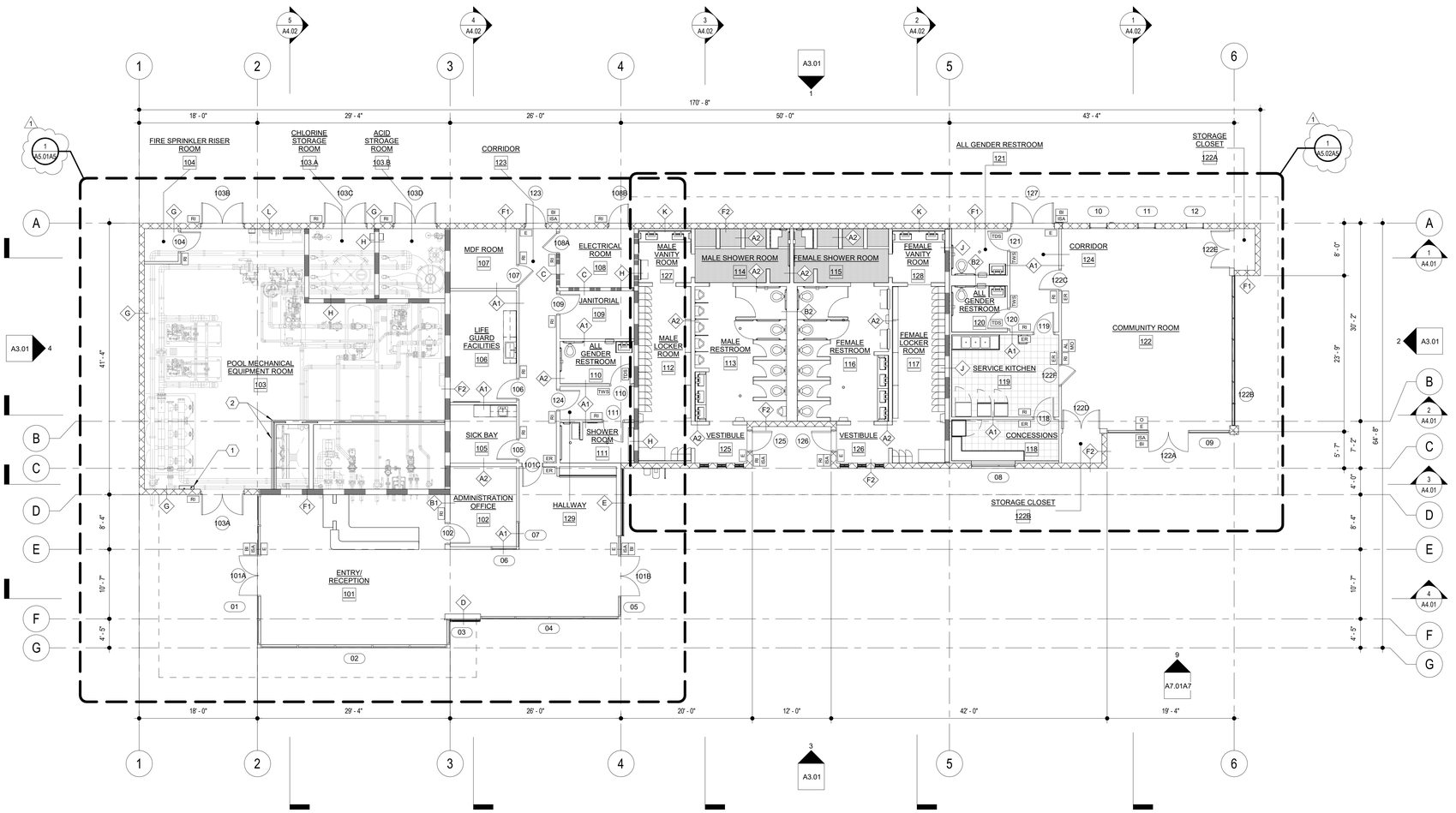

OVERALL FLOOR PLAN ALT 5

SCALE: 1/8" = 1'-0"

GENERAL NOTES

1. REFER TO STRUCTURAL, MECHANICAL, PLUMBING, AND ELECTRICAL DRAWINGS FOR ADDITIONAL APPLICABLE SCOPE OF WORK.

2. CONTRACTOR SHALL VERIFY ALL CONDITIONS PRIOR TO CONSTRUCTION. IF THERE ARE ANY CONFLICTS BETWEEN THESE DOCUMENTS OR BETWEEN THESE DOCUMENTS AND THAT OF OTHER DESIGN TEAM CONSULTANTS, PLEASE NOTIFY THE ARCHITECT IN WRITING, IDENTIFYING THE AREAS IN QUESTION PRIOR TO INSTALLATION OR CONSTRUCTION.

3. DO NOT SCALE THE DRAWINGS. ONLY WRITTEN DIMENSIONS SHALL BE USED. UNLESS OTHERWISE NOTED, THE FOLLOWING DIMENSIONING CRITERIA SHALL BE USED:
   A. FOR GYPSUM BOARD (GWB) AND METAL/WOOD STUD WALL CONSTRUCTION, ALL DIMENSIONS ARE SHOWN TO THE FACE OF STUD. REFER TO THE RESTROOM DRAWINGS FINISH ASSEMBLIES APPLIED TO THE FACE OF GWB ASSEMBLIES.
   B. REFER TO SPECIFIC PARTITION TYPE ON PROJECT PARTITION SCHEDULE FOR DIMESIONS AND FOR ALL UL ASSEMBLY NUMBERS.
   C. DOOR FRAME HINGES ARE LOCATED 4" NOMINALLY OFF THE ADJACENT PERPENDICULAR WALL UNLESS OTHERWISE NOTED. ALL FINAL DOOR LOCATIONS SHALL BE CONFIRMED WITH ARCHITECT.
   D. DIMENSION STRINGS LISTED WITH A +/- INDICATING THAT THESE DIMSNIONS ARE TO BE WITHIN TOLERANCE WHILE DIMENSIONS OF OTHER ITEMS WITHOUT +/- SHALL BE HELD.

4. CONTRACTOR SHALL BE RESPONSIBLE FOR REVIEWING ALL PARTITIONING TAGS AND COORDINATING FINISH REQUIREMENTS, HOLLOW METAL AND WOOD FRAMES, ETC.

5. REFER TO SITE PLAN FOR LOCATION OF COORDINDATES ORIGIN POINT (X:0, Y:0).

6. SEE BUILDING SECTIONS & EXTERIOR ELEVATIONS FOR ROOF LEVELS.

LEGEND

- 2 HR. FIRE RATED WALL
- 1 HR. FIRE RATED WALL
- WOOD STUD WALL
- CMU WALL
- (101) DOOR TYPE, SEE DOOR SCHEDULE ON SHEET A7.01
- (1) WINDOW TYPE, SEE DOOR SCHEDULE ON SHEET A7.01
- TDS TOILET DOOR SYMBOL, SEE DETAIL 5/A8.06
- TWS TOILET ROOM WALL SYMBOL, SEE DETAIL 6/A8.06
- RI ROOM IDENTIFICATION SIGN/ROOM NUMBERS SIGN (ACCESSIBLE), SEE DETAIL 7/A8.06
- E EXIT SIGN (ACCESSIBLE), SEE DETAIL 10/A8.06
- ER EXIT ROUTE SIGN (ACCESSIBLE), SEE DETAIL 11/A8.06
- AL ASSISTIVE LISTENING SIGNAGE, SEE DETAIL 12/A8.06
- MO MAXIMUM OCCUPANCY SIGN, SEE DETAIL 13/A8.06
- ISA INTERNATIONAL SYMBOL OF ACCESSIBILITY, SEE DETAIL 14/A8.06
- BI BUILDING ID. SIGN (ACCESSIBLE), SEE DETAIL 15/A8.06
- O MAXIMUM OCCUPANCY SIGN, SEE DETAIL 13/A8.06
- QUARRY TILE FLOORING. VERIFY DEPTH OF SLAB DEPRESSION PER MANUFACTURER RECOMMENDATION AS REQUIRED. SEE STRUCTURAL DWGS FOR ADDITIONAL INFORMATION
- X 0' - 0" / Y 0' - 0" DATUM POINT
- A1 WALL TAG, SEE A8.01 FOR ADDITIONAL INFORMATION

CONSTRUCTION KEY NOTES

1. ELECTRIC TANKLESS WATER HEATER. SEE PLUMBING DRAWINGS FOR ADDITIONAL INFORMATION
2. CONCRETE RETAINING CURB. SEE AQUATIC AND STRUCTURAL DRAWINGS FOR ADDITIONAL INFORMATION

AGENCY

FLEWELLING & MOODY
architecture planning interiors

HEADQUARTERS OFFICE:
99 S. Lake Avenue, Suite 300
Pasadena, CA 91101
Phone: 323.543.8300
E-Mail: fm-pasadena@flewelling-moody.com

ANTELOPE VALLEY OFFICE:
1035 West Lancaster Boulevard
Lancaster, California 93534
Phone: 661.949.0771
E-Mail: fm-lancaster@flewelling-moody.com

An Employee Owned Corporation

ARCHITECT

LICENSED ARCHITECT — MATT T. CARD — C-14211 — 08/31/2025 — STATE OF CALIFORNIA

CONSULTANT

Drawn by: Author
Check by: Checker

Revisions

No.	Date	Description
1	08/27/2025	BID ALTERNATE

All dimensions must be checked at the job by the contractor who accepts full responsibility for their accuracy under the contract. These plans & the specifications in connection therewith have been prepared for a specific site. Any and all responsibility for their use in whole or in part on any other site is hereby disclaimed by Flewelling & Moody.

CITY OF RIDGECREST

SGT. JOHN PINNEY MEMORIAL POOL REPLACEMENT PROJECT

205 S WARNER ST, RIDGECREST, CA 93555

Drawing Title

OVERALL FLOOR PLAN ALT 5

Job No. 3055-0100

Sheet No. **A2.01A5**

Date 12/20/2024

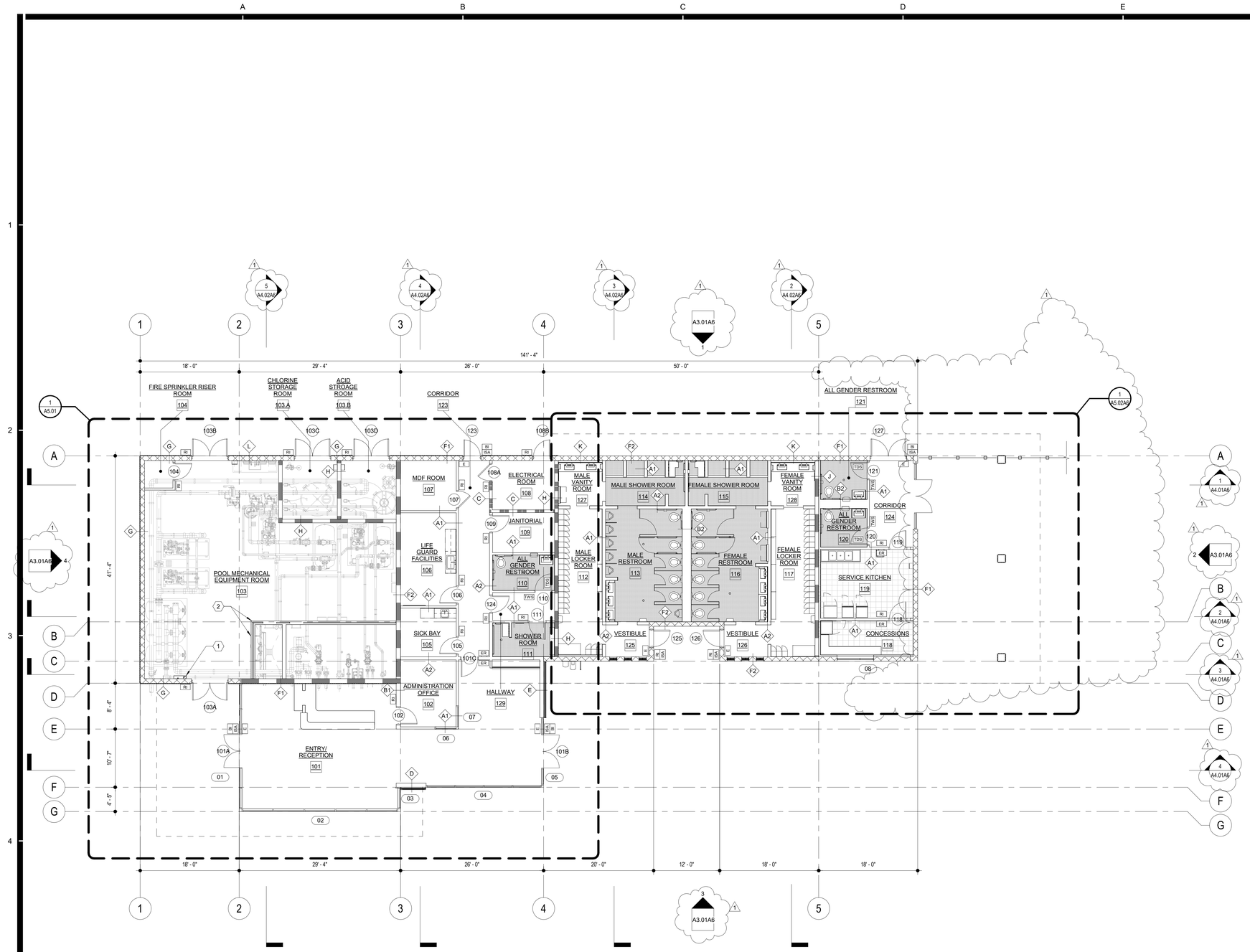

OVERALL FLOOR PLAN ALT 6

SCALE: 1/8" = 1'-0"

GENERAL NOTES

1. REFER TO STRUCTURAL, MECHANICAL, PLUMBING, AND ELECTRICAL DRAWINGS FOR ADDITIONAL APPLICABLE SCOPE OF WORK.

2. CONTRACTOR SHALL VERIFY ALL CONDITIONS PRIOR TO CONSTRUCTION. IF THERE ARE ANY CONFLICTS BETWEEN THESE DOCUMENTS OR BETWEEN THESE DOCUMENTS AND THAT OF OTHER DESIGN TEAM CONSULTANTS, PLEASE NOTIFY THE ARCHITECT IN WRITING, IDENTIFYING THE AREAS IN QUESTION PRIOR TO INSTALLATION OR CONSTRUCTION.

3. DO NOT SCALE THE DRAWINGS. ONLY WRITTEN DIMENSIONS SHALL BE USED. UNLESS OTHERWISE NOTED, THE FOLLOWING DIMENSIONING CRITERIA SHALL BE USED:
   A. FOR GYPSUM BOARD (GWB) AND METAL/WOOD STUD WALL CONSTRUCTION, ALL DIMENSIONS ARE SHOWN TO THE FACE OF STUD. REFER TO THE RESTROOM DRAWINGS FINISH ASSEMBLIES APPLIED TO THE FACE OF GWB ASSEMBLIES.
   B. REFER TO SPECIFIC PARTITION TYPE ON PROJECT PARTITION SCHEDULE FOR DIMESIONS AND FOR ALL UL ASSEMBLY NUMBERS.
   C. DOOR FRAME HINGES ARE LOCATED 4" NOMINALLY OFF THE ADJACENT PERPENDICULAR WALL UNLESS OTHERWISE NOTED. ALL FINAL DOOR LOCATIONS SHALL BE CONFIRMED WITH ARCHITECT.
   D. DIMENSION STRINGS LISTED WITH A +/- INDICATING THAT THESE DIMSNIONS ARE TO BE WITHIN TOLERANCE WHILE DIMENSIONS OF OTHER ITEMS WITHOUT +/- SHALL BE HELD.

4. CONTRACTOR SHALL BE RESPONSIBLE FOR REVIEWING ALL PARTITIONING TAGS AND COORDINATING FINISH REQUIREMENTS, HOLLOW METAL AND WOOD FRAMES, ETC.

5. REFER TO SITE PLAN FOR LOCATION OF COORDINDATES ORIGIN POINT (X:0, Y:0).

6. SEE BUILDING SECTIONS & EXTERIOR ELEVATIONS FOR ROOF LEVELS.

LEGEND

- 2 HR. FIRE RATED WALL
- 1 HR. FIRE RATED WALL
- WOOD STUD WALL
- CMU WALL
- (101) DOOR TYPE, SEE DOOR SCHEDULE ON SHEET A7.01
- (1) WINDOW TYPE, SEE DOOR SCHEDULE ON SHEET A7.01
- TDS TOILET DOOR SYMBOL, SEE DETAIL 5/A8.06
- TWS TOILET ROOM WALL SYMBOL, SEE DETAIL 6/A8.06
- RI ROOM IDENTIFICATION SIGN/ROOM NUMBERS SIGN (ACCESSIBLE), SEE DETAIL 7/A8.06
- E EXIT SIGN (ACCESSIBLE), SEE DETAIL 10/A8.06
- ER EXIT ROUTE SIGN (ACCESSIBLE), SEE DETAIL 11/A8.06
- AL ASSISTIVE LISTENING SIGNAGE, SEE DETAIL 12/A8.06
- MO MAXIMUM OCCUPANCY SIGN, SEE DETAIL 13/A8.06
- ISA INTERNATIONAL SYMBOL OF ACCESSIBILITY, SEE DETAIL 14/A8.06
- BI BUILDING ID. SIGN (ACCESSIBLE), SEE DETAIL 15/A8.06
- O MAXIMUM OCCUPANCY SIGN, SEE DETAIL 13/A8.06
- QUARRY TILE FLOORING. VERIFY DEPTH OF SLAB DEPRESSION PER MANUFACTURER RECOMMENDATION AS REQUIRED. SEE STRUCTURAL DWGS FOR ADDITIONAL INFORMATION
- CERAMIC TILE FLOORING. VERIFY DEPTH OF SLAB DEPRESSION PER MANUFACTURER RECOMMENDATION AS REQUIRED. SEE STRUCTURAL DWGS FOR ADDITIONAL INFORMATION
- X 0' - 0" Y 0' - 0" DATUM POINT
- A1 WALL TAG, SEE A8.01 FOR ADDITIONAL INFORMATION

CONSTRUCTION KEY NOTES

1. ELECTRIC TANKLESS WATER HEATER. SEE PLUMBING DRAWINGS FOR ADDITIONAL INFORMATION
2. CONCRETE RETAINING CURB. SEE AQUATIC AND STRUCTURAL DRAWINGS FOR ADDITIONAL INFORMATION

AGENCY

FLEWELLING & MOODY
architecture planning interiors

HEADQUARTERS OFFICE:
99 S. Lake Avenue, Suite 300
Pasadena, CA 91101
Phone: 323.543.8300
E-Mail: fm-pasadena@flewelling-moody.com

ANTELOPE VALLEY OFFICE:
1035 West Lancaster Boulevard
Lancaster, California 93534
Phone: 661.949.0771
E-Mail: fm-lancaster@flewelling-moody.com

An Employee Owned Corporation

ARCHITECT

LICENSED ARCHITECT — MATT T. GABBERT — C-14211 — 08/31/2025 — STATE OF CALIFORNIA

CONSULTANT

Drawn by: Author
Check by: Checker

Revisions

No.	Date	Description
1	08/27/2025	BID ALTERNATE

All dimensions must be checked at the job by the contractor who accepts full responsibility for their accuracy under the contract. These plans & the specifications in connection therewith have been prepared for a specific site. Any and all responsibility for their use in whole or in part on any other site is hereby disclaimed by Flewelling & Moody.

CITY OF RIDGECREST

SGT. JOHN PINNEY MEMORIAL POOL REPLACEMENT PROJECT

205 S WARNER ST, RIDGECREST, CA 93555

Drawing Title

OVERALL FLOOR PLAN ALT 6

Job No. 3055-0100

Sheet No. **A2.01A6**

Date 12/20/2024

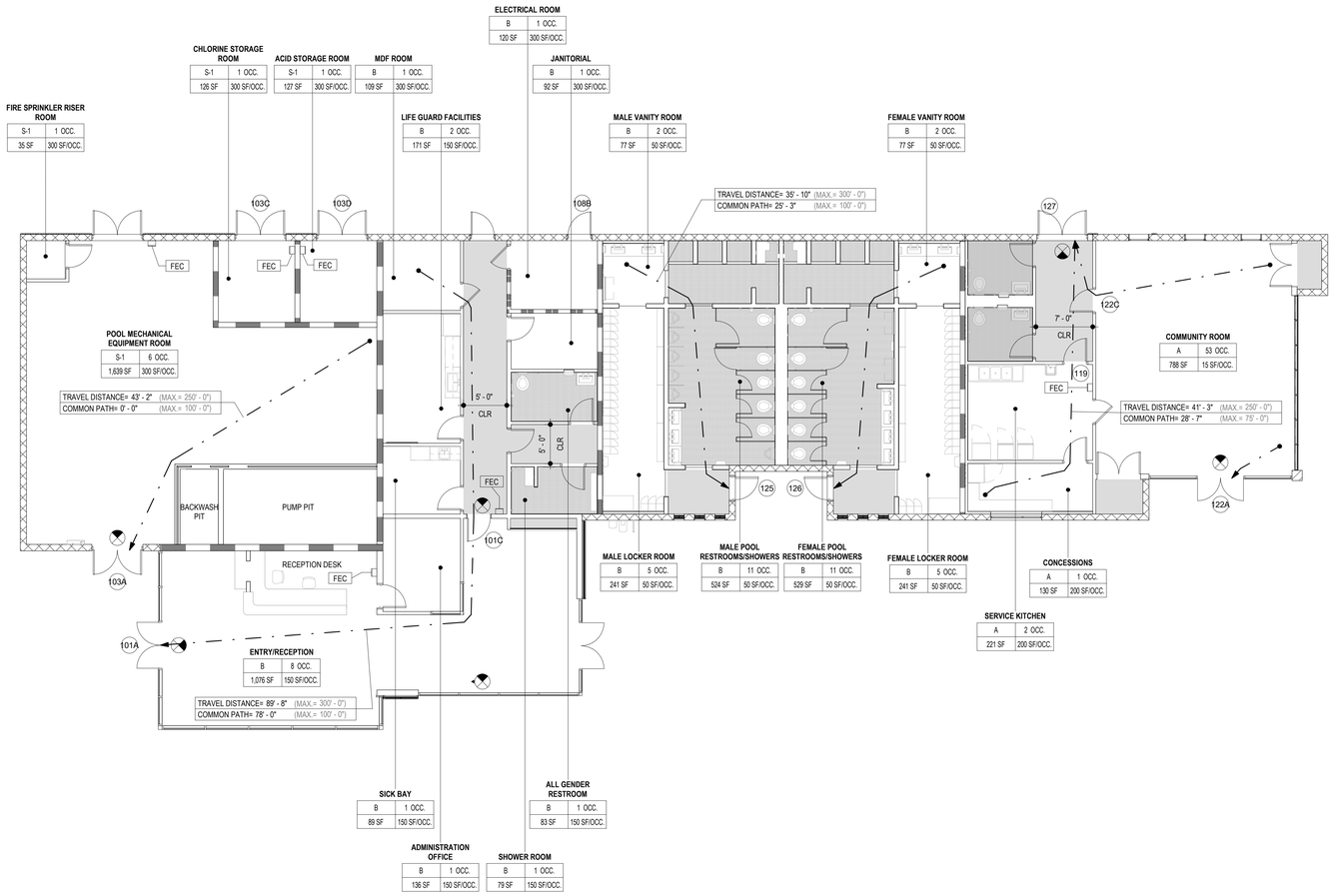

LEGEND

- SPACE WITH NO OCCUPANCY LOAD
- 2 HR. FIRE RATED WALL
- 1 HR. FIRE RATED WALL
- WOOD STUD WALL
- CMU WALL
- (101) DOOR TYPE, SEE DOOR SCHEDULE ON SHEET A7.01
- Name | CLASS | XX OCC. | 150 SF | XX SF/OCC. — OCCUPANCY LOAD INFORMATION
- TRAVEL DISTANCE= 100'-00" (MAX.= 200) / COMMON PATH= 200'-00" (MAX.= 200) — EGRESS TRAVEL DISTANCE INFORMATION
- PATH OF EGRESS
- EXIT SIGN (CEILING / WALL)
- FEC — FIRE EXTINGUISHER CABINET, SEE A8.09 FOR ADDITIONAL INFORMATION

OCCUPANT LOAD ANALYSIS

NAME	OCCUPANCY	FUNCTION OF SPACE	AREA	AREA TYPE	LOAD FACTOR	OCCUPANT LOAD
COMMUNITY ROOM	A	ASSEMBLY (UNCONCENTRATED)	788 SF	NET AREA	15	53
ADMINISTRATION OFFICE	B	BUSINESS AREA	136 SF	GROSS AREA	150	1
ALL GENDER RESTROOM	B	BUSINESS AREA	83 SF	GROSS AREA	150	1
ENTRY/RECEPTION	B	BUSINESS AREA	1076 SF	GROSS AREA	150	8
LIFE GUARD FACILITIES	B	BUSINESS AREA	171 SF	GROSS AREA	150	2
SHOWER ROOM	B	BUSINESS AREA	79 SF	GROSS AREA	150	1
SICK BAY	B	BUSINESS AREA	89 SF	GROSS AREA	150	1
CONCESSIONS	A	KITCHEN	130 SF	GROSS AREA	200	1
SERVICE KITCHEN	A	KITCHEN	221 SF	GROSS AREA	200	2
FEMALE LOCKER ROOM	B	LOCKER ROOM	241 SF	GROSS AREA	50	5
FEMALE VANITY ROOM	B	LOCKER ROOM	77 SF	GROSS AREA	50	2
MALE LOCKER ROOM	B	LOCKER ROOM	241 SF	GROSS AREA	50	5
MALE VANITY ROOM	B	LOCKER ROOM	77 SF	GROSS AREA	50	2
ACID STORAGE ROOM	S-1	MECHANICAL EQUIPMENT	127 SF	GROSS AREA	300	1
CHLORINE STORAGE ROOM	S-1	MECHANICAL EQUIPMENT	126 SF	GROSS AREA	300	1
ELECTRICAL ROOM	B	MECHANICAL EQUIPMENT	120 SF	GROSS AREA	300	1
FIRE SPRINKLER RISER ROOM	S-1	MECHANICAL EQUIPMENT	35 SF	GROSS AREA	300	1
JANITORIAL	B	MECHANICAL EQUIPMENT	92 SF	GROSS AREA	300	1
MDF ROOM	B	MECHANICAL EQUIPMENT	109 SF	GROSS AREA	300	1
POOL MECHANICAL EQUIPMENT ROOM	S-1	MECHANICAL EQUIPMENT	1639 SF	GROSS AREA	300	6
FEMALE POOL RESTROOMS/SHOWERS	B	POOL	529 SF	GROSS AREA	50	11
MALE POOL RESTROOMS/SHOWERS	B	POOL	524 SF	GROSS AREA	50	11
TOTAL OCCUPANT LOAD						118

INTERIOR EGRESS DOOR ANALYSIS

DOOR TAG NUMBER	DOOR WIDTH PER OCCUPANT	NUMBER OF OCCUPANTS USING EXIT DOOR	EGRESS WIDTH REQUIRED (INCHES)	DOOR WIDTH PROVIDED
101C	0.15"	7	0' - 1 1/16"	36"
119	0.15"	3	0' - 0 7/16"	36"
122C	0.15"	26	0' - 3 29/32"	36"

CUMULATIVE EGRESS DOOR ANALYSIS

DOOR TAG NUMBER	DOOR WIDTH PER OCCUPANT	NUMBER OF OCCUPANTS USING EXIT DOOR	EGRESS WIDTH REQUIRED (INCHES)	DOOR WIDTH PROVIDED
101A	0.15"	16	2.40"	72"
103A	0.15"	6	0.90"	76"
103C	0.15"	1	0.15"	76"
103D	0.15"	1	0.15"	76"
108B	0.15"	1	0.15"	36"
122A	0.15"	27	4.05"	72"
125	0.15"	18	2.70"	36"
126	0.15"	18	2.70"	36"
127	0.15"	30	4.50"	76"
TOTAL OCCUPANTS		118		

LIFE SAFETY FLOOR PLAN

SCALE: 1/8" = 1'-0"

1 / A2.02

N

C:\Users\DSanders\Documents\3055-0000-PinneyPool-CommunityBuildingModel_dsanders3W332.rvt 5/6/2025 8:23:20 AM

AGENCY

REVIEWED FOR CODE COMPLIANCE BY: WILLDAN ENGINEERING

Approval of these plans & specifications shall not be construed to be a permit for, or an approval of any violation of any Federal, State, County or City laws or ordinances. One set of approved plans must be kept on the job until completion.

9:23:57 AM Jul 21, 2025

FLEWELLING & MOODY
architecture planning interiors

HEADQUARTERS OFFICE:
99 S. Lake Avenue, Suite 300
Pasadena, CA 91101
Phone: 323.543.8300
E-Mail: fm-pasadena@flewelling-moody.com

ANTELOPE VALLEY OFFICE:
1035 West Lancaster Boulevard
Lancaster, California 93534
Phone: 661.949.0771
E-Mail: fm-lancaster@flewelling-moody.com

An Employee Owned Corporation

ARCHITECT

LICENSED ARCHITECT — MATT T. GARDNER — C-14211 — 06/30/2026 — STATE OF CALIFORNIA

CONSULTANT

Drawn by: Author

Check by: Checker

Revisions

No.	Date	Description

All dimensions must be checked at the job by the contractor who accepts full responsibility for their accuracy under the contract. These plans & the specifications in connection therewith have been prepared for a specific site. Any and all responsibility for their use in whole or in part on any other site is hereby disclaimed by Flewelling & Moody.

CITY OF RIDGECREST

SGT. JOHN PINNEY MEMORIAL POOL REPLACEMENT PROJECT

205 S WARNER ST, RIDGECREST, CA 93555

Drawing Title

LIFE SAFETY FLOOR PLAN

Job No. 3055-0100

Sheet No. **A2.02**

Date 07/14/2025

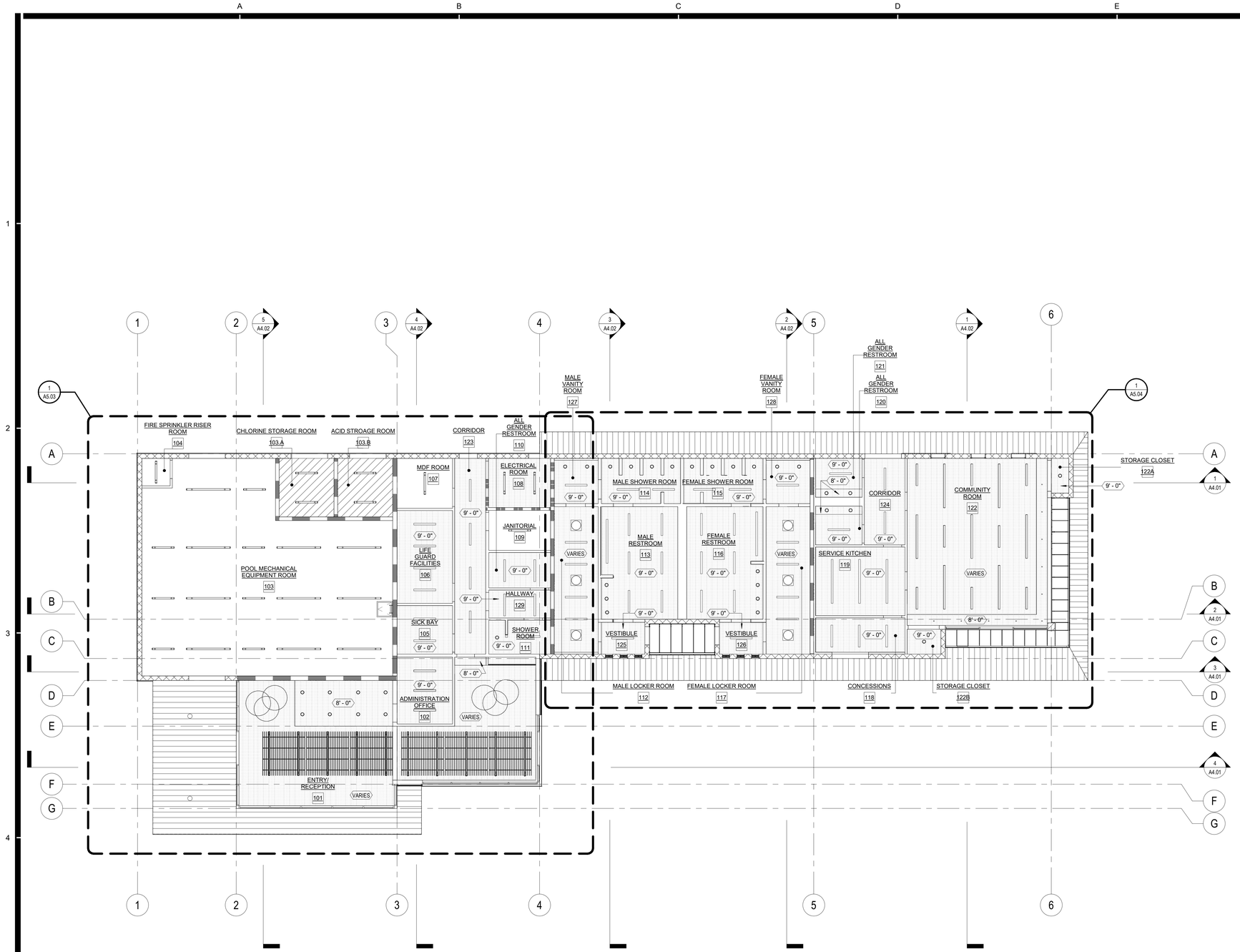

REFLECTED CEILING PLAN

SCALE: 1/8" = 1'-0"

GENERAL NOTES

1. REFER TO STRUCTURAL, MECHANICAL, PLUMBING, AND ELECTRICAL DRAWINGS FOR ADDITIONAL APPLICABLE SCOPE OF WORK.

2. CONTRACTOR SHALL VERIFY ALL CONDITIONS PRIOR TO CONSTRUCTION. IF THERE ARE ANY CONFLICTS BETWEEN THESE DOCUMENTS OR BETWEEN THESE DOCUMENTS AND THAT OF OTHER DESIGN TEAM CONSULTANTS, PLEASE NOTIFY THE ARCHITECT IN WRITING, IDENTIFYING THE AREAS IN QUESTION PRIOR TO INSTALLATION OR CONSTRUCTION.

3. DO NOT SCALE THE DRAWINGS. ONLY WRITTEN DIMENSIONS SHALL BE USED. UNLESS OTHERWISE NOTED, THE FOLLOWING DIMENSIONING CRITERIA SHALL BE USED:
   A. FOR GYPSUM BOARD (GWB) AND METAL/WOOD STUD WALL CONSTRUCTION, ALL DIMENSIONS ARE SHOWN TO THE FACE OF STUD. REFER TO THE RESTROOM DRAWINGS FINISH ASSEMBLIES APPLIED TO THE FACE OF GWB ASSEMBLIES.
   B. REFER TO SPECIFIC PARTITION TYPE ON PROJECT PARTITION SCHEDULE FOR DIMESIONS AND FOR ALL UL ASSEMBLY NUMBERS.
   C. DOOR FRAME HINGES ARE LOCATED 4" NOMINALLY OFF THE ADJACENT PERPENDICULAR WALL UNLESS OTHERWISE NOTED. ALL FINAL DOOR LOCATIONS SHALL BE CONFIRMED WITH ARCHITECT.
   D. DIMENSION STRINGS LISTED WITH A +/- INDICATING THAT THESE DIMSNIONS ARE TO BE WITHIN TOLERANCE WHILE DIMENSIONS OF OTHER ITEMS WITHOUT +/- SHALL BE HELD.

4. CONTRACTOR SHALL BE RESPONSIBLE FOR REVIEWING ALL PARTITIONING TAGS AND COORDINATING FINISH REQUIREMENTS, HOLLOW METAL AND WOOD FRAMES, ETC.

5. REFER TO SITE PLAN FOR LOCATION OF COORDINDATES ORIGIN POINT (X:0, Y:0).

6. SEE BUILDING SECTIONS & EXTERIOR ELEVATIONS FOR ROOF LEVELS.

LEGEND

- 2 HR. FIRE RATED WALL
- 1 HR. FIRE RATED CMU WALL
- WOOD STUD WALL
- CMU WALL
- EXPOSED STRUCTURE CEILING
- 5/8" THK. TYPE 'X' GYPSUM BOARD CEILING FINISH
- 2 HR FIRE RATED CEILING. SEE 17/A8.01 FOR ADDITIONAL INFORMATION
- 0'-0" INDICATES CEILING HEIGHT ABOVE FINISH FLOOR
- RECESSED LED LINEAR LIGHT FIXTURE.. SEE ELECTRICAL DRAWINGS FOR ADDITIONAL INFORMATION
- SUSPENDED LED LINEAR LIGHT FIXTURE. SEE ELECTRICAL DRAWINGS FOR ADDITIONAL INFORMAITON
- RECESSED LED ROUND LIGHT FIXTURE.. SEE ELECTRICAL DRAWINGS FOR ADDITIONAL INFORMATION
- SOLATUBE.
- SUSPENDED LED ROUND LIGHT FIXTURE. SEE 1/A5.03 AND ELECTRICAL DRAWINGS FOR ADDITIONAL INFORMATION
- SUSPENDED "FELTWORKS BLADES ACOUSTICAL FELT PANELS" BY ARMSTRONG 10'-0" A.F.F.

AGENCY

REVIEWED FOR CODE COMPLIANCE BY: WILLDAN ENGINEERING

Approval of these plans & specifications shall not be construed to be a permit for, or an approval of any violation of any Federal, State, County or City laws or ordinances. One set of approved plans must be kept on the job until completion.

9:23:58 AM Jul 21, 2025

FLEWELLING & MOODY
architecture planning interiors

HEADQUARTERS OFFICE:
99 S. Lake Avenue, Suite 300
Pasadena, CA 91101
Phone: 323.543.8300
E-Mail: fm-pasadena@flewelling-moody.com

ANTELOPE VALLEY OFFICE:
1035 West Lancaster Boulevard
Lancaster, California 93534
Phone: 661.949.0771
E-Mail: fm-lancaster@flewelling-moody.com

An Employee Owned Corporation

ARCHITECT

LICENSED ARCHITECT — MATT T. GABBERT — C-14211 — 06/30/2025 — STATE OF CALIFORNIA

CONSULTANT

Drawn by: Author
Check by: Checker
Revisions

No.	Date	Description

All dimensions must be checked at the job by the contractor who accepts full responsibility for their accuracy under the contract. These plans & the specifications in connection therewith have been prepared for a specific site. Any and all responsibility for their use in whole or in part on any other site is hereby disclaimed by Flewelling & Moody.

CITY OF RIDGECREST

SGT. JOHN PINNEY MEMORIAL POOL REPLACEMENT PROJECT

205 S WARNER ST, RIDGECREST, CA 93555

Drawing Title

OVERALL REFLECTED CEILING PLAN

Job No. 3055-0100

Sheet No. **A2.03**

Date 07/14/2025

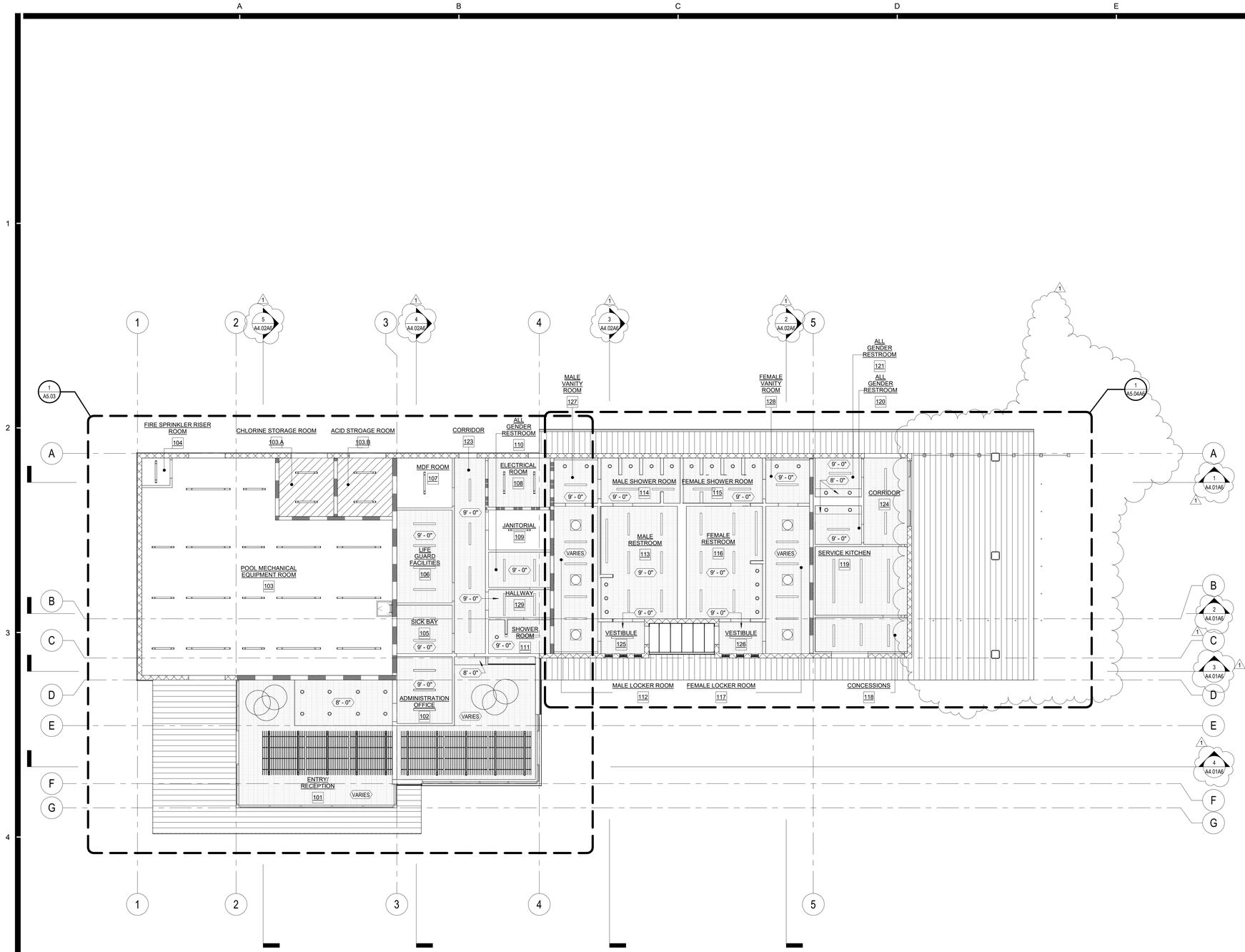

REFLECTED CEILING PLAN ALT 6

SCALE: 1/8" = 1'-0"

GENERAL NOTES

1. REFER TO STRUCTURAL, MECHANICAL, PLUMBING, AND ELECTRICAL DRAWINGS FOR ADDITIONAL APPLICABLE SCOPE OF WORK.

2. CONTRACTOR SHALL VERIFY ALL CONDITIONS PRIOR TO CONSTRUCTION. IF THERE ARE ANY CONFLICTS BETWEEN THESE DOCUMENTS OR BETWEEN THESE DOCUMENTS AND THAT OF OTHER DESIGN TEAM CONSULTANTS, PLEASE NOTIFY THE ARCHITECT IN WRITING, IDENTIFYING THE AREAS IN QUESTION PRIOR TO INSTALLATION OR CONSTRUCTION.

3. DO NOT SCALE THE DRAWINGS. ONLY WRITTEN DIMENSIONS SHALL BE USED. UNLESS OTHERWISE NOTED, THE FOLLOWING DIMENSIONING CRITERIA SHALL BE USED:
   A. FOR GYPSUM BOARD (GWB) AND METAL/WOOD STUD WALL CONSTRUCTION, ALL DIMENSIONS ARE SHOWN TO THE FACE OF STUD. REFER TO THE RESTROOM DRAWINGS FINISH ASSEMBLIES APPLIED TO THE FACE OF GWB ASSEMBLIES.
   B. REFER TO SPECIFIC PARTITION TYPE ON PROJECT PARTITION SCHEDULE FOR DIMESIONS AND FOR ALL UL ASSEMBLY NUMBERS.
   C. DOOR FRAME HINGES ARE LOCATED 4" NOMINALLY OFF THE ADJACENT PERPENDICULAR WALL UNLESS OTHERWISE NOTED. ALL FINAL DOOR LOCATIONS SHALL BE CONFIRMED WITH ARCHITECT.
   D. DIMENSION STRINGS LISTED WITH A +/- INDICATING THAT THESE DIMSNIONS ARE TO BE WITHIN TOLERANCE WHILE DIMENSIONS OF OTHER ITEMS WITHOUT +/- SHALL BE HELD.

4. CONTRACTOR SHALL BE RESPONSIBLE FOR REVIEWING ALL PARTITIONING TAGS AND COORDINATING FINISH REQUIREMENTS, HOLLOW METAL AND WOOD FRAMES, ETC.

5. REFER TO SITE PLAN FOR LOCATION OF COORDINDATES ORIGIN POINT (X:0, Y:0).

6. SEE BUILDING SECTIONS & EXTERIOR ELEVATIONS FOR ROOF LEVELS.

LEGEND

- 2 HR. FIRE RATED WALL
- 1 HR. FIRE RATED CMU WALL
- WOOD STUD WALL
- CMU WALL
- EXPOSED STRUCTURE CEILING
- 5/8" THK. TYPE 'X' GYPSUM BOARD CEILING FINISH
- 2 HR FIRE RATED CEILING. SEE 17/A8.01 FOR ADDITIONAL INFORMATION
- 0'-0" INDICATES CEILING HEIGHT ABOVE FINISH FLOOR
- RECESSED LED LINEAR LIGHT FIXTURE.. SEE ELECTRICAL DRAWINGS FOR ADDITIONAL INFORMATION
- SUSPENDED LED LINEAR LIGHT FIXTURE. SEE ELECTRICAL DRAWINGS FOR ADDITIONAL INFORMAITON
- RECESSED LED ROUND LIGHT FIXTURE.. SEE ELECTRICAL DRAWINGS FOR ADDITIONAL INFORMATION
- SOLATUBE.
- SUSPENDED LED ROUND LIGHT FIXTURE. SEE 1/A5.03 AND ELECTRICAL DRAWINGS FOR ADDITIONAL INFORMATION
- SUSPENDED "FELTWORKS BLADES ACOUSTICAL FELT PANELS" BY ARMSTRONG 10'-0" A.F.F.

AGENCY

FLEWELLING & MOODY
architecture planning interiors

HEADQUARTERS OFFICE:
99 S. Lake Avenue, Suite 300
Pasadena, CA 91101
Phone: 323.543.8300
E-Mail: fm-pasadena@flewelling-moody.com

ANTELOPE VALLEY OFFICE:
1035 West Lancaster Boulevard
Lancaster, California 93534
Phone: 661.949.0771
E-Mail: fm-lancaster@flewelling-moody.com

An Employee Owned Corporation

ARCHITECT

LICENSED ARCHITECT
MATT T. GABBERT
C-14211
08/31/2025
STATE OF CALIFORNIA

CONSULTANT

Drawn by: Author
Check by: Checker

Revisions

No.	Date	Description
1	08/27/2025	BID ALTERNATE

All dimensions must be checked at the job by the contractor who accepts full responsibility for their accuracy under the contract. These plans & the specifications in connection therewith have been prepared for a specific site. Any and all responsibility for their use in whole or in part on any other site is hereby disclaimed by Flewelling & Moody.

CITY OF RIDGECREST

SGT. JOHN PINNEY MEMORIAL POOL REPLACEMENT PROJECT

205 S WARNER ST, RIDGECREST, CA 93555

Drawing Title

OVERALL REFLECTED CEILING PLAN ALT 6

Job No. 3055-0100

Sheet No. **A2.03A6**

Date 12/20/2024

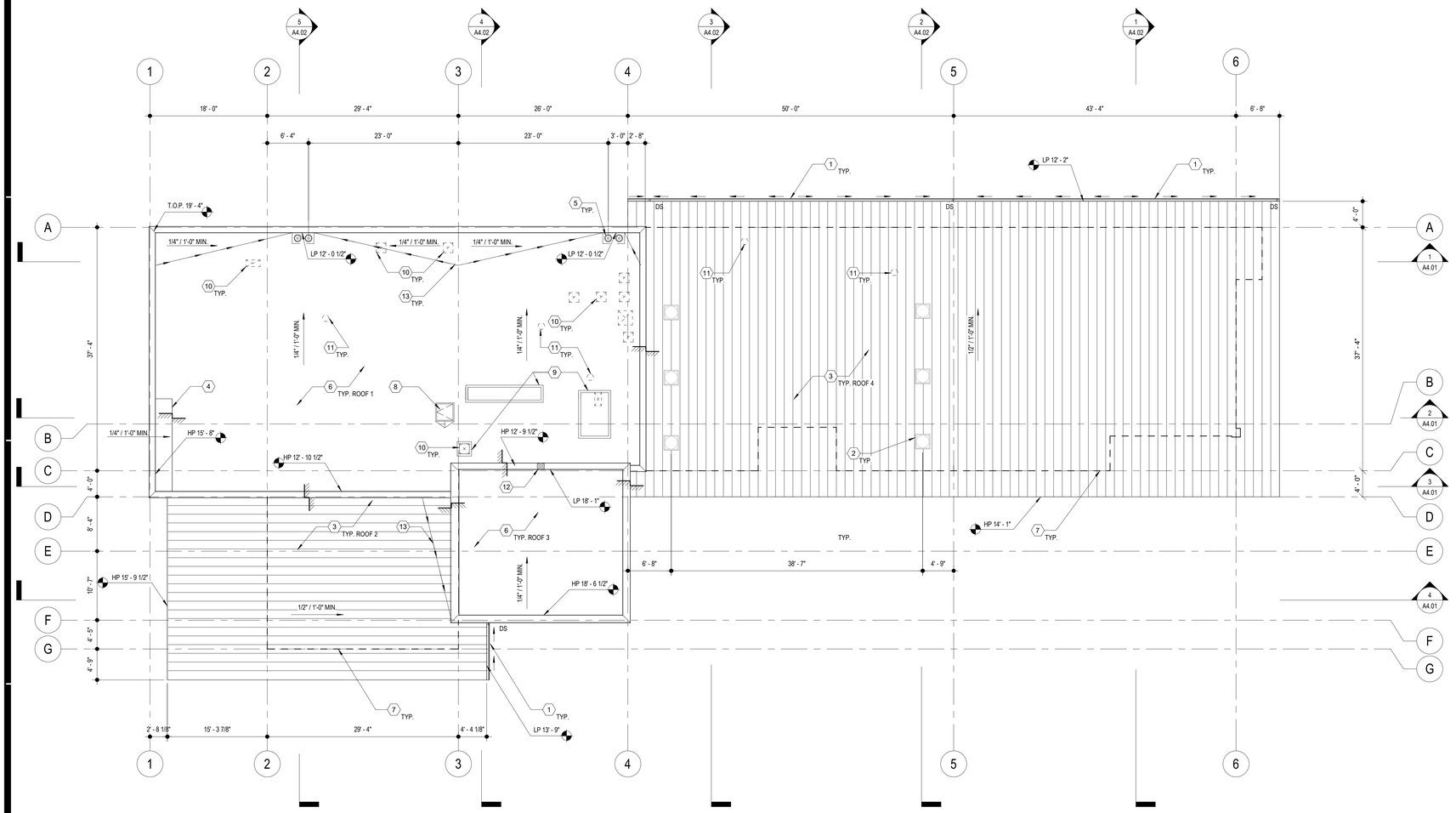

ROOF PLAN

SCALE: 1/8" = 1'-0"

1 / A2.04

N

GENERAL NOTES

1. REFER TO STRUCTURAL, MECHANICAL, PLUMBING, AND ELECTRICAL DRAWINGS FOR ADDITIONAL APPLICABLE SCOPE OF WORK.

2. CONTRACTOR SHALL VERIFY ALL CONDITIONS PRIOR TO CONSTRUCTION. IF THERE ARE ANY CONFLICTS BETWEEN THESE DOCUMENTS OR BETWEEN THESE DOCUMENTS AND THAT OF OTHER DESIGN TEAM CONSULTANTS, PLEASE NOTIFY THE ARCHITECT IN WRITING, IDENTIFYING THE AREAS IN QUESTION PRIOR TO INSTALLATION OR CONSTRUCTION.

3. DO NOT SCALE THE DRAWINGS. ONLY WRITTEN DIMENSIONS SHALL BE USED. UNLESS OTHERWISE NOTED, THE FOLLOWING DIMENSIONING CRITERIA SHALL BE USED:
   A. FOR GYPSUM BOARD (GWB) AND METAL/WOOD STUD WALL CONSTRUCTION, ALL DIMENSIONS ARE SHOWN TO THE FACE OF STUD. REFER TO THE RESTROOM DRAWINGS FINISH ASSEMBLIES APPLIED TO THE FACE OF GWB ASSEMBLIES.
   B. REFER TO SPECIFIC PARTITION TYPE ON PROJECT PARTITION SCHEDULE FOR DIMESIONS AND FOR ALL UL ASSEMBLY NUMBERS.
   C. DOOR FRAME HINGES ARE LOCATED 4" NOMINALLY OFF THE ADJACENT PERPENDICULAR WALL UNLESS OTHERWISE NOTED. ALL FINAL DOOR LOCATIONS SHALL BE CONFIRMED WITH ARCHITECT.
   D. DIMENSION STRINGS LISTED WITH A +/-. INDICATING THAT THESE DIMSNIONS ARE TO BE WITHIN TOLERANCE WHILE DIMENSIONS OF OTHER ITEMS WITHOUT +/- SHALL BE HELD.

4. CONTRACTOR SHALL BE RESPONSIBLE FOR REVIEWING ALL PARTITIONING TAGS AND COORDINATING FINISH REQUIREMENTS, HOLLOW METAL AND WOOD FRAMES, ETC.

5. REFER TO SITE PLAN FOR LOCATION OF COORDINDATES ORIGIN POINT (X:0, Y:0).

6. SEE BUILDING SECTIONS & EXTERIOR ELEVATIONS FOR ROOF LEVELS.

LEGEND

- STANDING SEAM METAL ROOF
- ELEVATION CHANGE
- HP/LP 0'-0" — ELEVATION CHANGE HIGH POINT / LOW POINT

CONSTRUCTION KEY NOTES

1. ROOF GUTTER AND DOWNSPOUT. SEE A8.04 & A8.05 FOR ADDITIONAL INFORMATION
2. SOLATUBE, TYP.
3. STANDING SEAM METAL ROOF. SEE A8.05 FOR ADDITIONAL INFORMATION
4. FRAMED ROOF CURB . SEE STRUCTURAL DRAWINGS FOR ADDITIONAL INFORMATION
5. ROOF DRAIN AND OVERFLOW DRAIN. SEE PLUMBING DRAWINGS FOR ADDITIONAL INFORMATION
6. MODIFIED BITUMINOUS ROOFING MATERIAL. SEE A8.04 FOR ADDITIONAL INFORMATION
7. EDGE OF BUILDING BELOW SHOWN DASHED
8. ROOF ACCESS LADDER. SEE A8.04 FOR ADDITIONAL INFORMATION
9. HOUSE KEEPING PAD. SEE STRUCTURAL & MECHANICAL FOR ADDITIONAL INFORMATION
10. MECHANICAL EQUIPMENT PENETRATION DOWN THROUGH ROOF. SEE MECHANICAL DRAWINGS FOR ADDITIONAL INFORMATION
11. PLUMBING EQUIPMENT PENETRATION DOWN THROUGH ROOF. SEE PLUMBING DRAWINGS FOR ADDITIONAL INFORMATION
12. THROUGH WALL SCUPPER. SEE A8.05 FOR ADDITIONAL INFORMATION
13. WOOD FRAMED ROOF CRICKET. SEE STRUCTURAL DRAWINGS FOR ADDITIONAL INFORMATION

AGENCY

REVIEWED FOR CODE COMPLIANCE BY: WILLDAN ENGINEERING

Approval of these plans & specifications shall not be construed to be a permit for, or an approval of any violation of any Federal, State, County or City laws or ordinances. One set of approved plans must be kept on the job until completion.

9:24:00 AM Jul 21, 2025

FLEWELLING & MOODY
architecture planning interiors

HEADQUARTERS OFFICE:
99 S. Lake Avenue, Suite 300
Pasadena, CA 91101
Phone: 323.543.8300
E-Mail: fm-pasadena@flewelling-moody.com

ANTELOPE VALLEY OFFICE:
1035 West Lancaster Boulevard
Lancaster, California 93534
Phone: 661.949.0771
E-Mail: fm-lancaster@flewelling-moody.com

An Employee Owned Corporation

ARCHITECT

LICENSED ARCHITECT — MATT T. GAMBLE — C-14211 — 06/30/2025 — STATE OF CALIFORNIA

CONSULTANT

Drawn by: Author
Check by: Checker
Revisions

No.	Date	Description

All dimensions must be checked at the job by the contractor who accepts full responsibility for their accuracy under the contract. These plans & the specifications in connection therewith have been prepared for a specific site. Any and all responsibility for their use in whole or in part on any other site is hereby disclaimed by Flewelling & Moody.

CITY OF RIDGECREST

SGT. JOHN PINNEY MEMORIAL POOL REPLACEMENT PROJECT

205 S WARNER ST, RIDGECREST, CA 93555

Drawing Title

ROOF PLAN

Job No. 3055-0100

Sheet No. **A2.04**

Date 07/14/2025

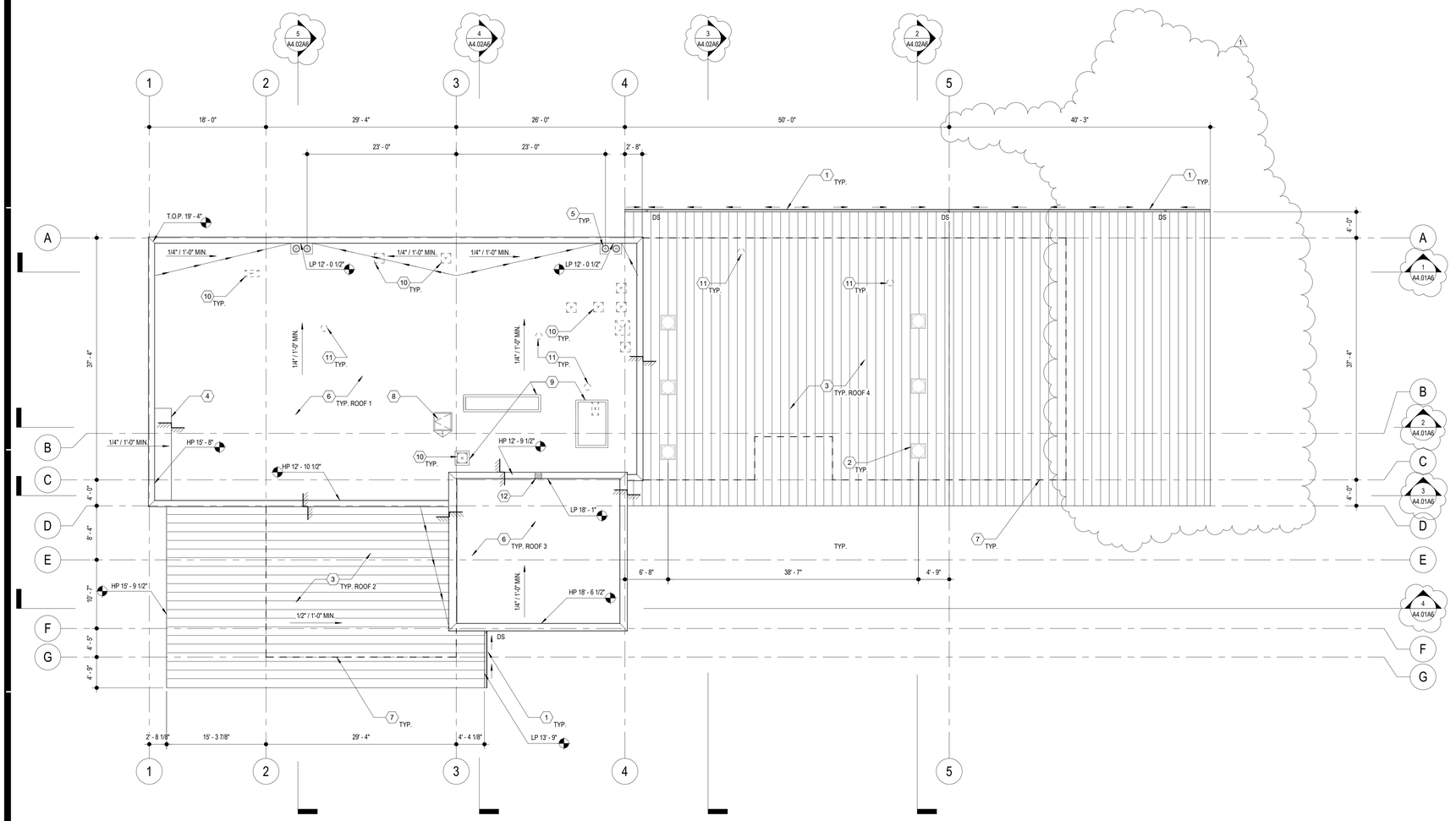

ROOF PLAN ALT 6

SCALE: 1/8" = 1'-0"

GENERAL NOTES

1. REFER TO STRUCTURAL, MECHANICAL, PLUMBING, AND ELECTRICAL DRAWINGS FOR ADDITIONAL APPLICABLE SCOPE OF WORK.

2. CONTRACTOR SHALL VERIFY ALL CONDITIONS PRIOR TO CONSTRUCTION. IF THERE ARE ANY CONFLICTS BETWEEN THESE DOCUMENTS OR BETWEEN THESE DOCUMENTS AND THAT OF OTHER DESIGN TEAM CONSULTANTS, PLEASE NOTIFY THE ARCHITECT IN WRITING, IDENTIFYING THE AREAS IN QUESTION PRIOR TO INSTALLATION OR CONSTRUCTION.

3. DO NOT SCALE THE DRAWINGS. ONLY WRITTEN DIMENSIONS SHALL BE USED. UNLESS OTHERWISE NOTED, THE FOLLOWING DIMENSIONING CRITERIA SHALL BE USED:
   A. FOR GYPSUM BOARD (GWB) AND METAL/WOOD STUD WALL CONSTRUCTION, ALL DIMENSIONS ARE SHOWN TO THE FACE OF STUD. REFER TO THE RESTROOM DRAWINGS FINISH ASSEMBLIES APPLIED TO THE FACE OF GWB ASSEMBLIES.
   B. REFER TO SPECIFIC PARTITION TYPE ON PROJECT PARTITION SCHEDULE FOR DIMESIONS AND FOR ALL UL ASSEMBLY NUMBERS.
   C. DOOR FRAME HINGES ARE LOCATED 4" NOMINALLY OFF THE ADJACENT PERPENDICULAR WALL UNLESS OTHERWISE NOTED. ALL FINAL DOOR LOCATIONS SHALL BE CONFIRMED WITH ARCHITECT.
   D. DIMENSION STRINGS LISTED WITH A +/-. INDICATING THAT THESE DIMSNIONS ARE TO BE WITHIN TOLERANCE WHILE DIMENSIONS OF OTHER ITEMS WITHOUT +/- SHALL BE HELD.

4. CONTRACTOR SHALL BE RESPONSIBLE FOR REVIEWING ALL PARTITIONING TAGS AND COORDINATING FINISH REQUIREMENTS, HOLLOW METAL AND WOOD FRAMES, ETC.

5. REFER TO SITE PLAN FOR LOCATION OF COORDINDATES ORIGIN POINT (X:0, Y:0).

6. SEE BUILDING SECTIONS & EXTERIOR ELEVATIONS FOR ROOF LEVELS.

LEGEND

- STANDING SEAM METAL ROOF
- ELEVATION CHANGE
- HP/LP 0'-0" — ELEVATION CHANGE HIGH POINT / LOW POINT

CONSTRUCTION KEY NOTES

1. ROOF GUTTER AND DOWNSPOUT. SEE A8.04 & A8.05 FOR ADDITIONAL INFORMATION
2. SOLATUBE, TYP.
3. STANDING SEAM METAL ROOF. SEE A8.05 FOR ADDITIONAL INFORMATION
4. FRAMED ROOF CURB . SEE STRUCTURAL DRAWINGS FOR ADDITIONAL INFORMATION
5. ROOF DRAIN AND OVERFLOW DRAIN. SEE PLUMBING DRAWINGS FOR ADDITIONAL INFORMATION
6. MODIFIED BITUMINOUS ROOFING MATERIAL. SEE A8.04 FOR ADDITIONAL INFORMATION
7. EDGE OF BUILDING BELOW SHOWN DASHED
8. ROOF ACCESS LADDER. SEE A8.04 FOR ADDITIONAL INFORMATION
9. HOUSE KEEPING PAD. SEE STRUCTURAL & MECHANICAL FOR ADDITIONAL INFORMATION
10. MECHANICAL EQUIPMENT PENETRATION DOWN THROUGH ROOF. SEE MECHANICAL DRAWINGS FOR ADDITIONAL INFORMATION
11. PLUMBING EQUIPMENT PENETRATION DOWN THROUGH ROOF. SEE PLUMBING DRAWINGS FOR ADDITIONAL INFORMATION
12. THROUGH WALL SCUPPER. SEE A8.05 FOR ADDITIONAL INFORMATION
13. WOOD FRAMED ROOF CRICKET. SEE STRUCTURAL DRAWINGS FOR ADDITIONAL INFORMATION

AGENCY

FLEWELLING & MOODY
architecture planning interiors

HEADQUARTERS OFFICE:
99 S. Lake Avenue, Suite 300
Pasadena, CA 91101
Phone: 323.543.8300
E-Mail: fm-pasadena@flewelling-moody.com

ANTELOPE VALLEY OFFICE:
1035 West Lancaster Bouldvard
Lancaster, California 93534
Phone: 661.949.0771
E-Mail: fm-lancaster@flewelling-moody.com

An Employee Owned Corporation

ARCHITECT

LICENSED ARCHITECT — MATT T. GAMBLE — C-14211 — 08/31/2025 — STATE OF CALIFORNIA

CONSULTANT

Drawn by: Author
Check by: Checker

Revisions

No.	Date	Description
1	08/27/2025	BID ALTERNATE

All dimensions must be checked at the job by the contractor who accepts full responsibility for their accuracy under the contract. These plans & the specifications in connection therewith have been prepared for a specific site. Any and all responsibility for their use in whole or in part on any other site is hereby disclaimed by Flewelling & Moody.

CITY OF RIDGECREST

SGT. JOHN PINNEY MEMORIAL POOL REPLACEMENT PROJECT

205 S WARNER ST, RIDGECREST, CA 93555

Drawing Title

ROOF PLAN ALT 6

Job No. 3055-0100

Sheet No. **A2.04A6**

Date 12/20/2024

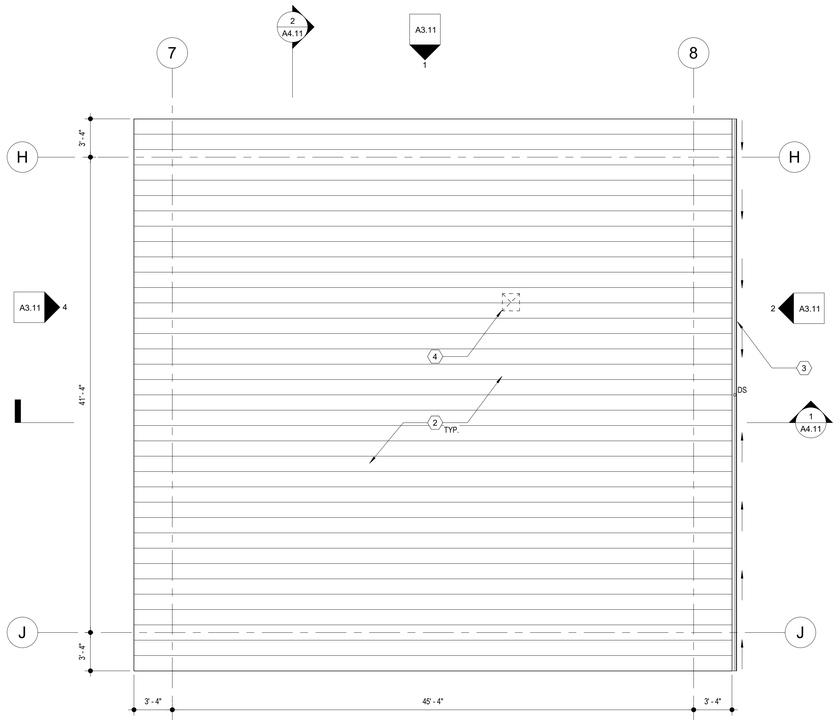

ROOF PLAN

SCALE: 3/16" = 1'-0"

11 / A2.11

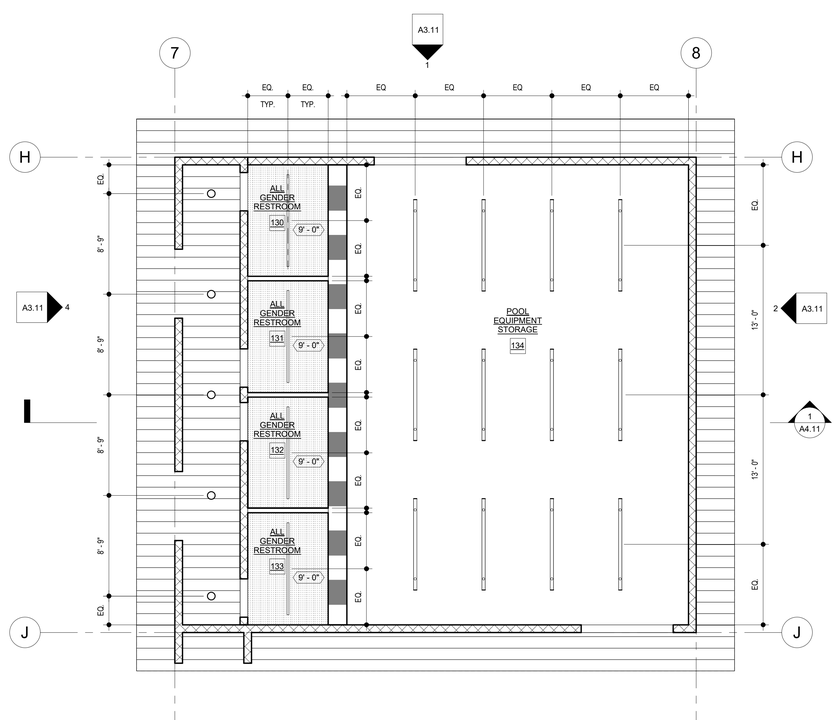

REFLECTED CEILING PLAN

SCALE: 3/16" = 1'-0"

3 / A2.11

GENERAL NOTES

1. REFER TO STRUCTURAL, MECHANICAL, PLUMBING, AND ELECTRICAL FOR ADDITIONAL APPLICABLE SCOPE OF WORK.
2. CONTRACTOR SHALL VERIFY ALL CONDITIONS PRIOR TO CONSTRUCTION. ALL DISCREPANCIES SHALL BE BROUGHT TO THE ATTENTION OF OWNER AND ARCHITECT PRIOR TO COMMENCING WORK.
3. REFER TO SITE PLAN FOR CONTINUATION OF PATH OF EGRESS FROM ALL GENDER RESTROOMS.

LEGEND

- 5/8" THK. TYPE 'X' GYPSUM CEILING FINISH
- R-MER SOFFIT ALUMINUM PANLES BY GARLAND U.N.O.
- 0'-0" — INDICATES CEILING HEIGHT ABOVE FINISH FLOOR
- RECESSED LED LINEAR LIGHT FIXTURE. SEE ELECTRICAL DRAWINGS FOR ADDITIONAL INFORMATION
- SUSPENDED LED LINEAR LIGHT FIXTURE. SEE ELECTRICAL DRAWINGS FOR ADDITIONAL INFORMAITON
- WOOD STUD WALL
- 1 HR. RATED WALL
- CMU WALL
- 101 — DOOR TYPE, SEE DOOR SCHEDULE ON SHEET A7.01
- TDS — TOILET DOOR SYMBOL, SEE DETAIL 5/A8.06
- TWS — TOILET ROOM WALL SYMBOL, SEE DETAIL 6/A8.06
- RI — ROOM IDENTIFICATION SIGN/ROOM NUMBERS SIGN (ACCESSIBLE), SEE DETAIL 7/A8.06
- E — EXIT SIGN (ACCESSIBLE), SEE DETAIL 10/A8.06
- ISA — INTERNATIONAL SYMBOL OF ACCESSIBILITY, SEE DETAIL 14/A8.06
- BI — BUILDING ID. SIGN (ACCESSIBLE), SEE DETAIL 15/A8.06
- PATH OF EGRESS
- FEC — FIRE EXTINGUISHER CABINET, SEE A8.11 FOR ADDITIONAL INFORMATION

Name	
CLASS	XX OCC.
150 SF	XX SF/OCC.

OCCUPANCY LOAD INFORMATION

TRAVEL DISTANCE= 100'-00"	(MAX.= 200)
COMMON PATH= 200'-00"	(MAX.= 200)

EGRESS TRAVEL DISTANCE INFORMATION

DS — DOWNSPOUT

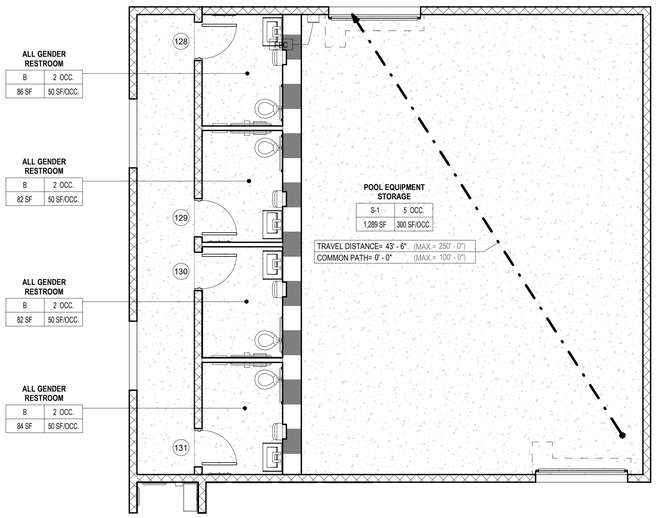

LIFE SAFETY FLOOR PLAN

SCALE: 3/16" = 1'-0"

9 / A2.11

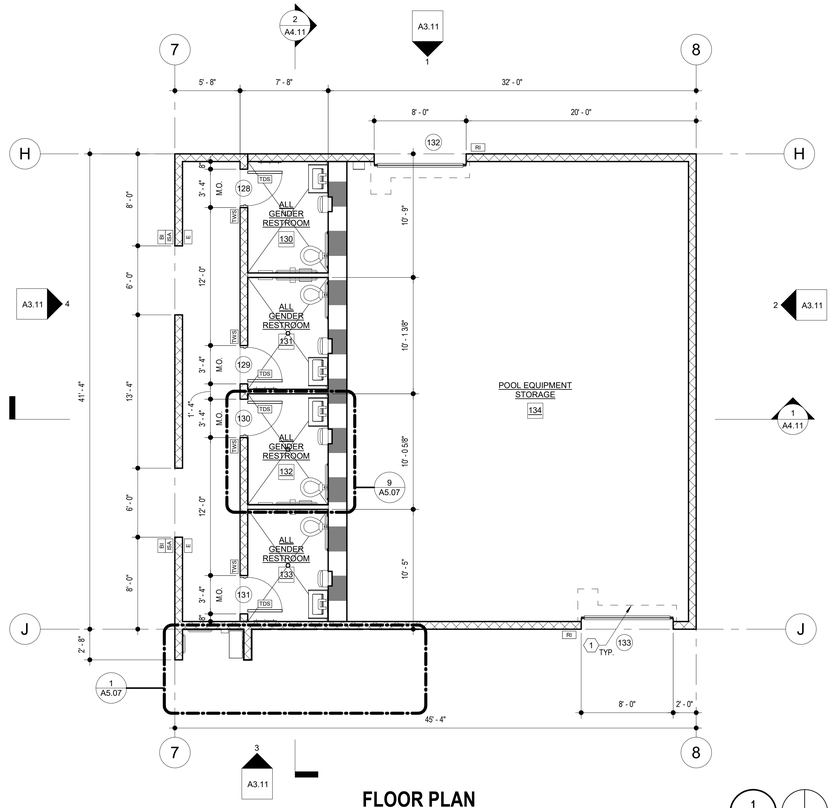

FLOOR PLAN

SCALE: 3/16" = 1'-0"

1 / A2.11

CONSTRUCTION KEY NOTES

1. METAL ROLL UP DOOR. SEE A8.02 FOR ADDITIONAL INFORMATION
2. STANDING SEAM METAL ROOF. SEE A8.05 FOR ADDITIONAL INFORMATION
3. ROOF GUTTER AND DOWNSPOUT. SEE A8.05 AND CIVIL DRAWINGS FOR ADDITIONAL INFORMATION
4. MECHANICAL EQUIPMENT PENETRATION DOWN THROUGH ROOF. SEE MECHANICAL DRAWINGS FOR ADDITIONAL INFORMATION

CODE ANALYSIS

OCCUPANT LOAD ANALYSIS

NAME	OCCUPANCY	FUNCTION OF SPACE	AREA	AREA TYPE	LOAD FACTOR	OCCUPANT LOAD
POOL EQUIPMENT STORAGE	S-1	ACCESSORY STORAGE AREA	1289 SF	GROSS	300	5
ALL GENDER RESTROOM	B	SWIMMING POOL	86 SF	GROSS	50	2
ALL GENDER RESTROOM	B	SWIMMING POOL	82 SF	GROSS	50	2
ALL GENDER RESTROOM	B	SWIMMING POOL	82 SF	GROSS	50	2
ALL GENDER RESTROOM	B	SWIMMING POOL	84 SF	GROSS	50	2
TOTAL OCCUPANT LOAD						13

EGRESS DOOR ANALYSIS

DOOR TAG NUMBER	DOOR WIDTH PER OCCUPANT	NUMBER OF OCCUPANTS USING EXIT DOOR	EGRESS WIDTH REQUIRED (INCHES)	DOOR WIDTH PROVIDED
128	0.15"	2	0"	36"
129	0.15"	2	0"	36"
130	0.15"	2	0"	36"
131	0.15"	2	0"	36"
132		5		103"
133		0		103"

AGENCY

REVIEWED FOR CODE COMPLIANCE BY: WILLDAN ENGINEERING

Approval of these plans & specifications shall not be construed to be a permit for, or an approval of any violation of any Federal, State, County or City laws or ordinances. One set of approved plans must be kept on the job until completion.

9:24:01 AM Jul 21, 2025

FLEWELLING & MOODY
architecture planning interiors

HEADQUARTERS OFFICE:
99 S. Lake Avenue, Suite 300
Pasadena, CA 91101
Phone: 323.543.8300
E-Mail: fm-pasadena@flewelling-moody.com

ANTELOPE VALLEY OFFICE:
1035 West Lancaster Boulevard
Lancaster, California 93534
Phone: 661.949.0771
E-Mail: fm-lancaster@flewelling-moody.com

An Employee Owned Corporation

ARCHITECT

LICENSED ARCHITECT — MATT T. GADD — C-14211 — 06/30/2025 — STATE OF CALIFORNIA

CONSULTANT

Drawn by: Author

Check by: Checker

Revisions

No.	Date	Description

All dimensions must be checked at the job by the contractor who accepts full responsibility for their accuracy under the contract. These plans & the specifications in connection therewith have been prepared for a specific site. Any and all responsibility for their use in whole or in part on any other site is hereby disclaimed by Flewelling & Moody.

CITY OF RIDGECREST

SGT. JOHN PINNEY MEMORIAL POOL REPLACEMENT PROJECT

205 S WARNER ST, RIDGECREST, CA 93555

Drawing Title

DETACHED BUILDING PLANS

Job No. 3055-0100

Sheet No. **A2.11**

Date 07/14/2025

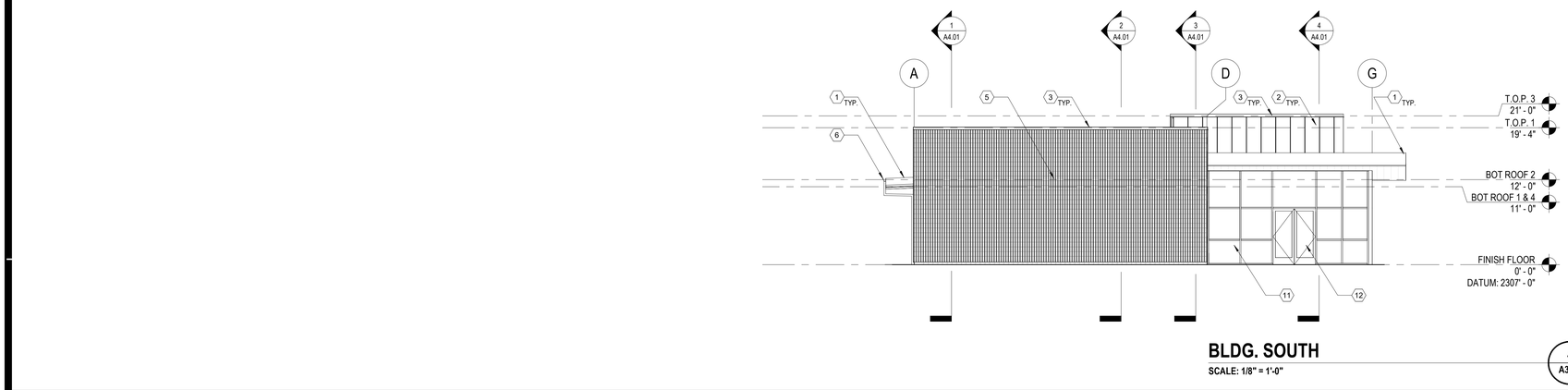

BLDG. SOUTH

SCALE: 1/8" = 1'-0"

4 A3.01

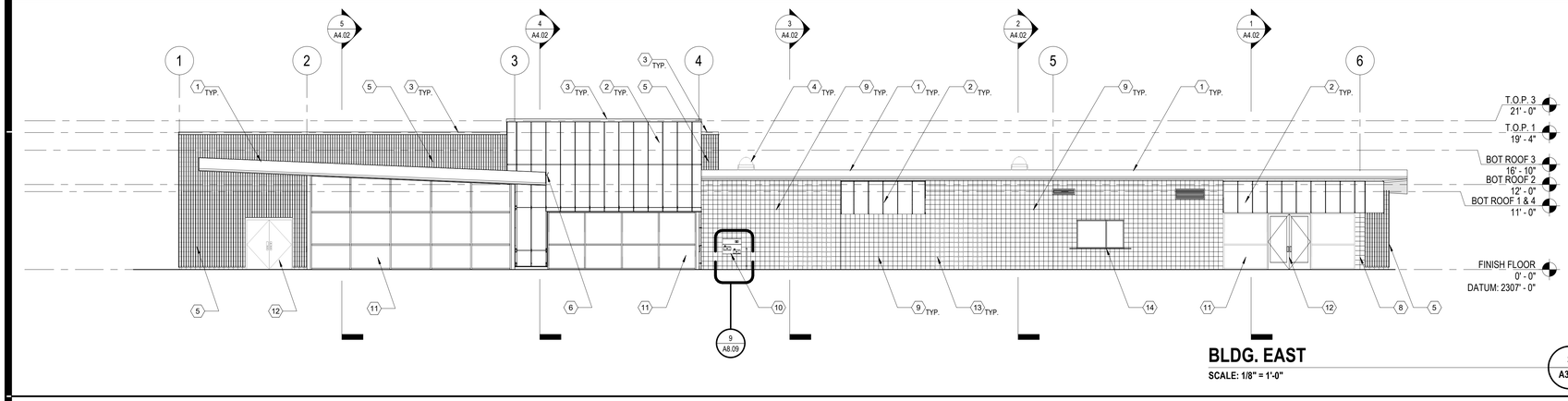

BLDG. EAST

SCALE: 1/8" = 1'-0"

3 A3.01

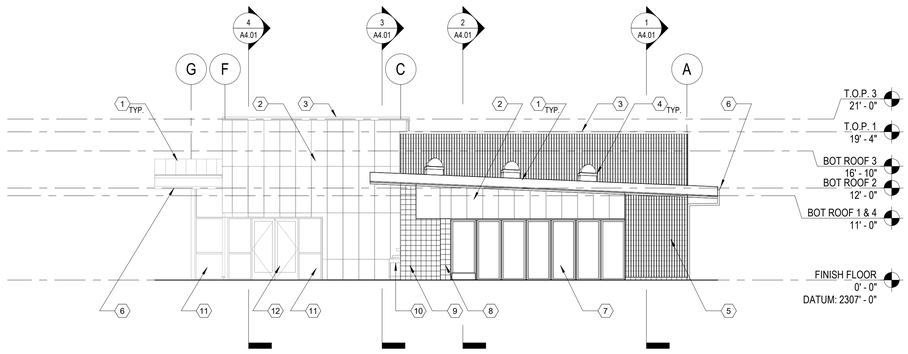

BLDG. NORTH

SCALE: 1/8" = 1'-0"

2 A3.01

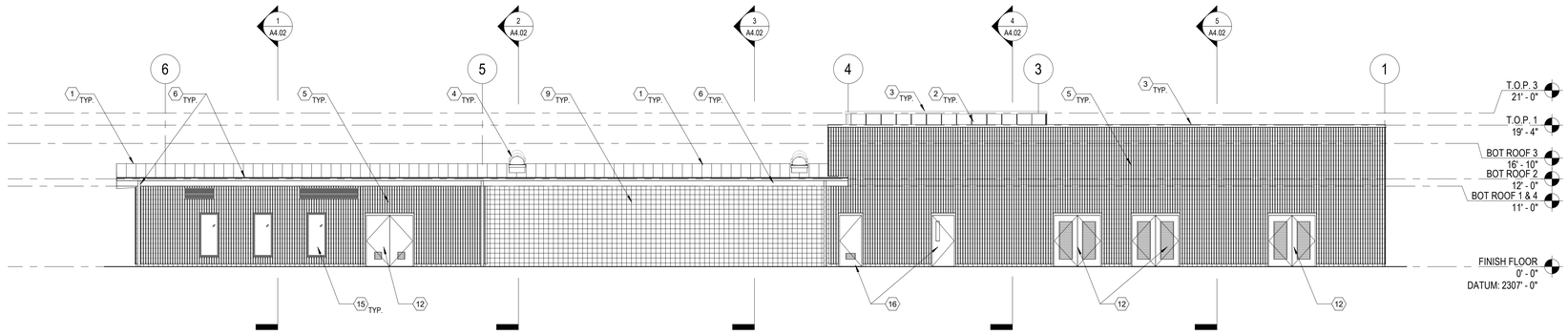

BLDG. WEST

SCALE: 1/8" = 1'-0"

1 A3.01

GENERAL NOTES

1. REFER TO PLAN DRAWINGS FOR CMU BLOCK THICKNESS AND ALLIGNMENT.
2. ALL CMU BLOCKS MUST HAVE THE FINISH SIDE FACING THE EXTERIOR.
3. THE DATUM IS BASED ON THE NORTH AMERICAN VERTICAL DATUM OF 1988 (NAVD-88) ELEVATIONS. REFER TO CIVIL DRAWINGS FOR MORE INFORMATION.
4. BOTTOM OF FLUTED CMU BLOCK TO REMAIN LEVEL FROM THE HIGHEST POINT OF THE ADJACENT FINISH GRADE.

LEGEND

CMU BLOCK PRECISION 301 SCORE

CMU BLOCK PRECISION VIRTICAL SCORE

CONSTRUCTION KEY NOTES

1. STANDING SEAM METAL ROOF. SEE A8.05 FOR ADDITIONAL INFORMATION
2. ELEMENT WALL PANEL SYSTEM BY IMETCO OR APPROVED EQUAL
3. PARAPET COPING. SEE A8.04 FOR ADDITIONAL INFORMATION
4. DAYLIGHT CAPTURE ZONE DOME BY SOLATUBE OR APPROVED EQUAL
5. CONCRETE MASONRY BLOCK PRECISION 301 SCORE BY ORCO BLOCK AND HARDSCAPE OR APPROVED EQUAL
6. ROOF GUTTER AND DOWNSPOUT. SEE A8.05 FOR ADDITIONAL INFORMATION
7. 7 PANEL NANAWALL UNIT W/ SWING DOOR MODEL SL70 OR APPROVED EQUAL
8. CONCRETE MASONRY BLOCK PILASTER PRECISION VERTICAL SCORE BY ORCO BLOCK AND HARDSCAPE OR APPROVED EQUAL. SEE STRUCTURAL DWGS FOR ADDITIONAL INFORMATION
9. CONCRETE MASONRY BLOCK PRECISION VERTICAL SCORE BY ORCO BLOCK AND HARDSCAPE OR APPROVED EQUAL
10. HI-LO DRINKING FOUNTAIN
11. EXTERIOR GLAZING SYSTEM. SEE A7.01 FOR ADDITIONAL INFORMATION
12. 6'-0" WIDE DOOR. SEE A7.01 FOR ADDITIONAL INFORMATION
13. GLASS BLOCK. SEE 14/A8.02 FOR ADDITIONAL INFORMATION
14. CONCESSION TRANSACTION WINDOW. SEE A7.01 FOR ADDITIONAL INFORMATION
15. 32" X 72" WINDOW. SEE A7.01 FOR ADDITIONAL INFORMATION
16. 3'-0" WIDE DOOR. SEE A7.01 FOR ADDITIONAL INFORMATION

AGENCY

REVIEWED FOR CODE COMPLIANCE BY: WILLDAN ENGINEERING

Approval of these plans & specifications shall not be construed to be a permit for, or an approval of any violation of any Federal, State, County or City laws or ordinances. One set of approved plans must be kept on the job until completion.

9:24:03 AM Jul 21, 2025

FLEWELLING & MOODY
architecture planning interiors

HEADQUARTERS OFFICE:
99 S. Lake Avenue, Suite 300
Pasadena, CA 91101
Phone: 323.543.8300
E-Mail: fm-pasadena@flewelling-moody.com

ANTELOPE VALLEY OFFICE:
1035 West Lancaster Boulevard
Lancaster, California 93534
Phone: 661.949.0771
E-Mail: fm-lancaster@flewelling-moody.com

An Employee Owned Corporation

ARCHITECT

LICENSED ARCHITECT
MATT T. GAMBLE
C-14211
06/30/2025
STATE OF CALIFORNIA

CONSULTANT

Drawn by: Author

Check by: Checker

Revisions

No.	Date	Description

All dimensions must be checked at the job by the contractor who accepts full responsibility for their accuracy under the contract. These plans & the specifications in connection therewith have been prepared for a specific site. Any and all responsibility for their use in whole or in part on any other site is hereby disclaimed by Flewelling & Moody.

CITY OF RIDGECREST

SGT. JOHN PINNEY MEMORIAL POOL REPLACEMENT PROJECT

205 S WARNER ST, RIDGECREST, CA 93555

Drawing Title

EXTERIOR ELEVATIONS

Job No. 3055-0100

Sheet No. **A3.01**

Date 07/14/2025

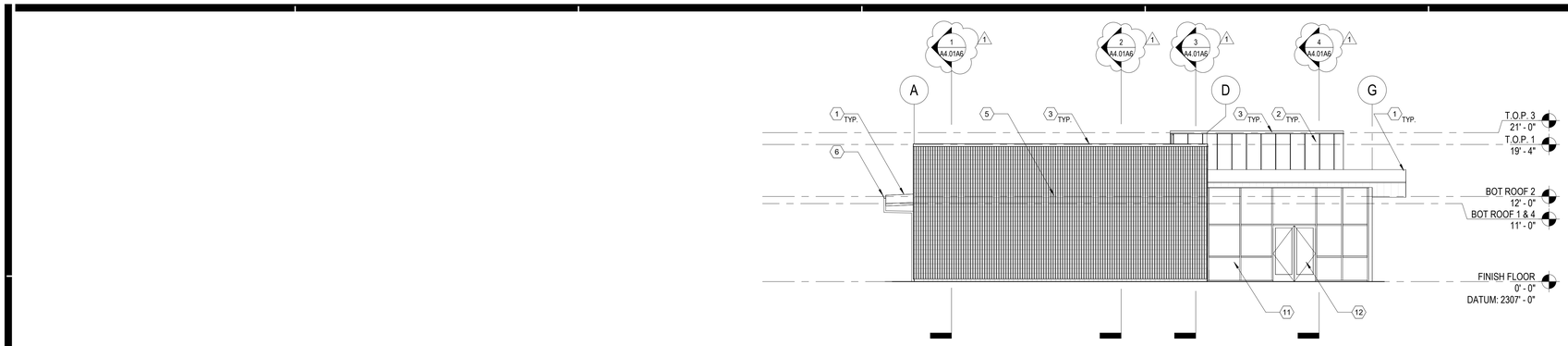

BLDG. SOUTH

SCALE: 1/8" = 1'-0"

4 A3.01A6

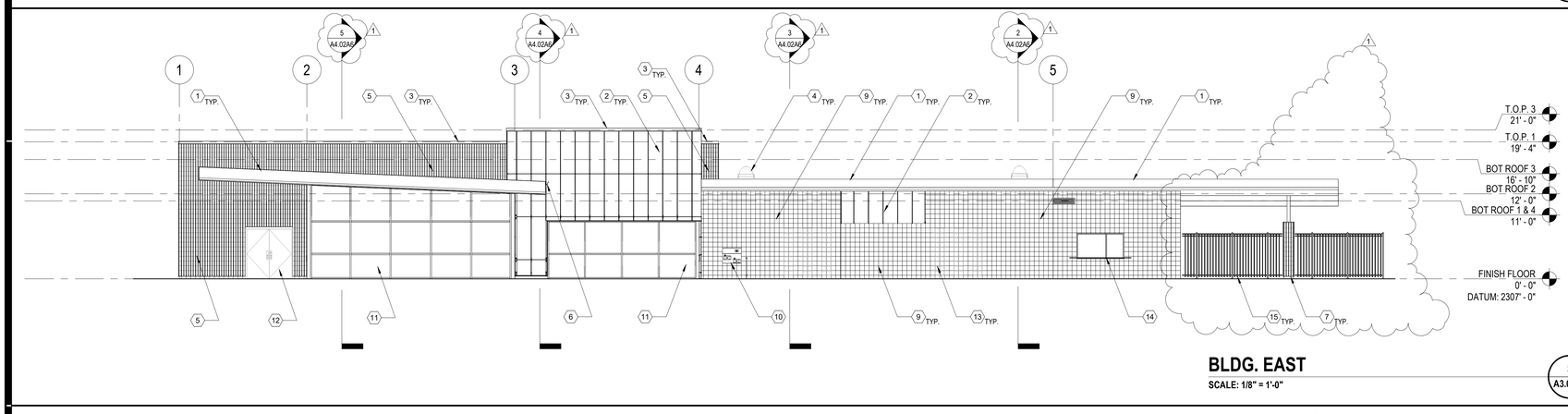

BLDG. EAST

SCALE: 1/8" = 1'-0"

3 A3.01A6

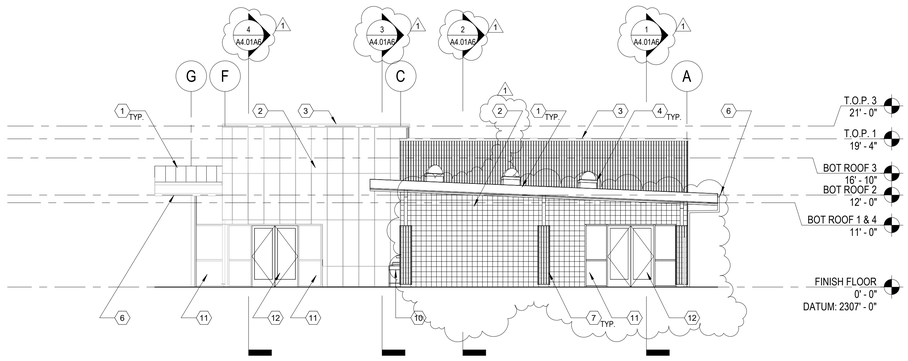

BLDG. NORTH

SCALE: 1/8" = 1'-0"

2 A3.01A6

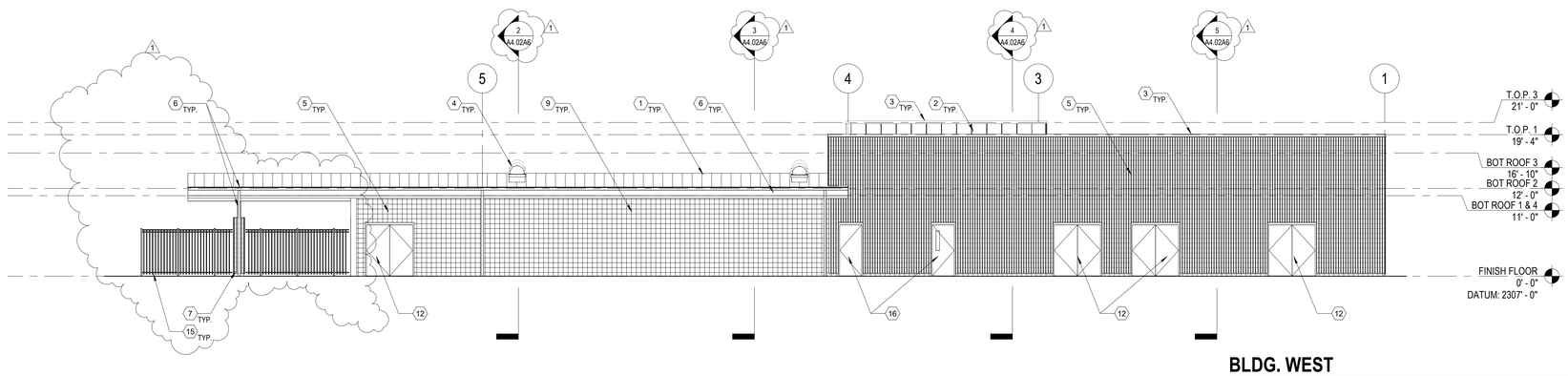

BLDG. WEST

SCALE: 1/8" = 1'-0"

1 A3.01A6

GENERAL NOTES

1. REFER TO PLAN DRAWINGS FOR CMU BLOCK THICKNESS AND ALLIGNMENT.
2. ALL CMU BLOCKS MUST HAVE THE FINISH SIDE FACING THE EXTERIOR.
3. THE DATUM IS BASED ON THE NORTH AMERICAN VERTICAL DATUM OF 1988 (NAVD-88) ELEVATIONS. REFER TO CIVIL DRAWINGS FOR MORE INFORMATION.
4. BOTTOM OF FLUTED CMU BLOCK TO REMAIN LEVEL FROM THE HIGHEST POINT OF THE ADJACENT FINISH GRADE.

LEGEND

CMU BLOCK PRECISION 301 SCORE

CMU BLOCK PRECISION VIRTICAL SCORE

CONSTRUCTION KEY NOTES

1. STANDING SEAM METAL ROOF. SEE A8.05 FOR ADDITIONAL INFORMATION
2. ELEMENT WALL PANEL SYSTEM BY IMETCO OR APPROVED EQUAL
3. PARAPET COPING. SEE A8.04 FOR ADDITIONAL INFORMATION
4. DAYLIGHT CAPTURE ZONE DOME BY SOLATUBE OR APPROVED EQUAL
5. CONCRETE MASONRY BLOCK PRECISION 301 SCORE BY ORCO BLOCK AND HARDSCAPE OR APPROVED EQUAL
6. ROOF GUTTER AND DOWNSPOUT. SEE A8.05 FOR ADDITIONAL INFORMATION
7. CMU VENEER, 301 SCORE OVER CONCRETE PILASTER. SEE 8/A1.09 AND STRUCTURAL DRAWINGS FOR ADDITIONAL INFORMATION
8. CONCRETE MASONRY BLOCK PILASTER PRECISION VERTICAL SCORE BY ORCO BLOCK AND HARDSCAPE OR APPROVED EQUAL. SEE STRUCTURAL DWGS FOR ADDITIONAL INFORMATION
9. CONCRETE MASONRY BLOCK PRECISION VERTICAL SCORE BY ORCO BLOCK AND HARDSCAPE OR APPROVED EQUAL
10. HI-LO DRINKING FOUNTAIN
11. EXTERIOR GLAZING SYSTEM. SEE A7.01A6 FOR ADDITIONAL INFORMATION
12. 6'-0" WIDE DOOR. SEE A7.01A6 FOR ADDITIONAL INFORMATION
13. GLASS BLOCK. SEE 14/A8.02 FOR ADDITIONAL INFORMATION
14. CONCESSION TRANSACTION WINDOW. SEE A7.01A6 FOR ADDITIONAL INFORMATION
15. 6'-6" H. TUBE STEEL FENCING. SEE 1/A1.08 FOR ADDITIONAL INFORMATION
16. 3'-0" WIDE DOOR. SEE A7.01A6 FOR ADDITIONAL INFORMATION

AGENCY

FLEWELLING & MOODY
architecture planning interiors

HEADQUARTERS OFFICE:
99 S. Lake Avenue, Suite 300
Pasadena, CA 91101
Phone: 323.543.8300
E-Mail: fm-pasadena@flewelling-moody.com

ANTELOPE VALLEY OFFICE:
1035 West Lancaster Boulevard
Lancaster, California 93534
Phone: 661.949.0771
E-Mail: fm-lancaster@flewelling-moody.com

An Employee Owned Corporation

ARCHITECT

LICENSED ARCHITECT
MATT T. GABBERT
C-14211
08/31/2025
STATE OF CALIFORNIA

CONSULTANT

Drawn by: Author
Check by: Checker

Revisions

No.	Date	Description
1	08/27/2025	BID ALTERNATE

All dimensions must be checked at the job by the contractor who accepts full responsibility for their accuracy under the contract. These plans & the specifications in connection therewith have been prepared for a specific site. Any and all responsibility for their use in whole or in part on any other site is hereby disclaimed by Flewelling & Moody.

CITY OF RIDGECREST

SGT. JOHN PINNEY MEMORIAL POOL REPLACEMENT PROJECT

205 S WARNER ST, RIDGECREST, CA 93555

Drawing Title

EXTERIOR ELEVATIONS ALT 6

Job No. 3055-0100

Sheet No. **A3.01A6**

Date 12/20/2024

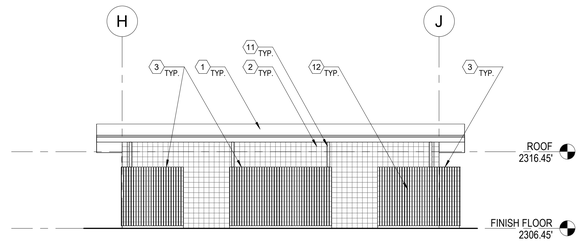

BLDG. SOUTH

SCALE: 1/8" = 1'-0"

4 A3.11

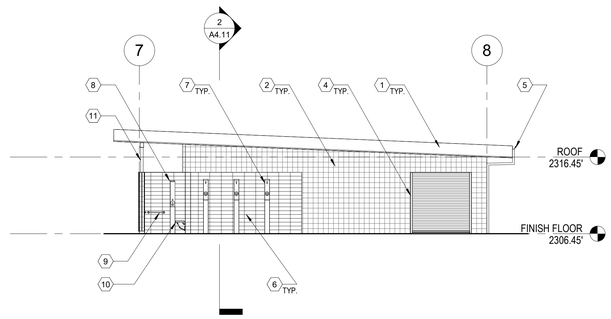

BLDG. EAST

SCALE: 1/8" = 1'-0"

3 A3.11

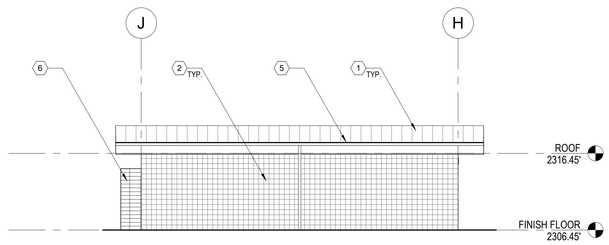

BLDG. NORTH

SCALE: 1/8" = 1'-0"

2 A3.11

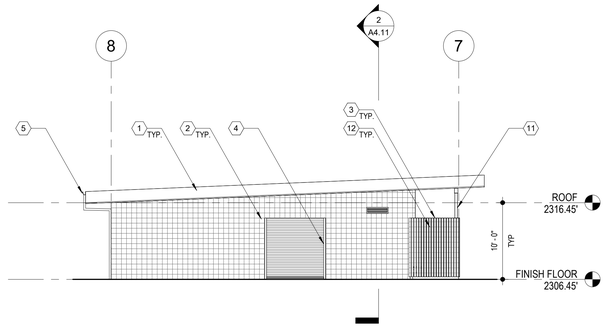

BLDG. WEST

SCALE: 1/8" = 1'-0"

1 A3.11

GENERAL NOTES

1. REFER TO PLAN DRAWINGS FOR CMU BLOCK THICKNESS AND ALIGNMENT.
2. ALL CMU BLOCKS MUST HAVE THE FINISH SIDE FACING THE EXTERIOR.
3. THE DATUM IS BASED ON THE NORTH AMERICAN VERTICAL DATUM OF 1988 (NAVD-88) ELEVATIONS. REFER TO CIVIL DRAWINGS FOR MORE INFORMATION

LEGEND

- CMU BLOCK PRECISION 301 SCORE
- CMU BLOCK PRECISION VIRTICAL SCORE
- 6X18 CERAMIC TILE FINISH

CONSTRUCTION KEY NOTES

1. STANDING SEAM METAL ROOF. SEE A8.05 FOR ADDITIONAL INFORMATION
2. CONCRETE BLOCK PRECISION VERTICAL SCORE BY ORCO BLOCK AND HARDSCAPE OR APPROVED EQUAL
3. 2" CMU CAP, TYP.
4. 8'-0" X 8'-0" ROLL UP DOOR
5. ROOF GUTTER AND DOWNSPOUT. SEE A8.05 FOR ADDITIONAL INFORMATION
6. 6X18 WALL CERAMIC TILE FINISH
7. SHOWER, WALL MOUNTED. MODEL WS-IWCA WITH VERTICAL SHROUD, BY BRADLEY OR APPROVED EQUAL
8. ACCESSIBLE SHOWER, WALL MOUNTED. MODEL WS-IWCA-ADA, BY BRADLEY OR APPROVED EQUAL. SEE 4/A8.06 FOR ADDIDTIONAL INFORMATION REGARDING ACCESSIBILTY FOR STANDARD ROLL-IN TYPE SHOWERS
9. 24" LONG GRAB BAR. 832 SERIES, BY BRADLEY OR APPROVED EQUAL. SEE 4/A8.06 FOR ADDIDTIONAL INFORMATION REGARDING ACCESSIBILTY FOR STANDARD ROLL-IN TYPE SHOWERS
10. COLLAPSIBLE SHOWER SEAT, WALL MOUNTED. MODEL 9591, BY BRADLEY OR APPROVED EQUAL SEE 4/A8.06 FOR ADDIDTIONAL INFORMATION REGARDING ACCESSIBILTY FOR STANDARD ROLL-IN TYPE SHOWERS
11. HSS STUB COLUMN AND BEAM. SEE STRUCTURAL DRAWINGS FOR ADDITIONAL INFORMATION
12. CONCRETE BLOCK PRECISION 301 SCORE BY ORCO BLOCK AND HARDSCAPE OR APPROVED EQUAL

AGENCY

REVIEWED FOR CODE COMPLIANCE BY: WILLDAN ENGINEERING

Approval of these plans & specifications shall not be construed to be a permit for, or an approval of any violation of any Federal, State, County or City laws or ordinances. One set of approved plans must be kept on the job until completion.

9:24:04 AM Jul 21, 2025

FLEWELLING & MOODY
architecture planning interiors

HEADQUARTERS OFFICE:
99 S. Lake Avenue, Suite 300
Pasadena, CA 91101
Phone: 323.543.8300
E-Mail: fm-pasadena@flewelling-moody.com

ANTELOPE VALLEY OFFICE:
1035 West Lancaster Bouldvard
Lancaster, California 93534
Phone: 661.949.0771
E-Mail: fm-lancaster@flewelling-moody.com

An Employee Owned Corporation

ARCHITECT

LICENSED ARCHITECT — MATT T. GADD — C-14211 — 06/30/2025 — STATE OF CALIFORNIA

CONSULTANT

Drawn by: Author

Check by: Checker

Revisions

No.	Date	Description

All dimensions must be checked at the job by the contractor who accepts full responsibility for their accuracy under the contract. These plans & the specifications in connection therewith have been prepared for a specific site. Any and all responsibility for their use in whole or in part on any other site is hereby disclaimed by Flewelling & Moody.

CITY OF RIDGECREST

SGT. JOHN PINNEY MEMORIAL POOL REPLACEMENT PROJECT

205 S WARNER ST, RIDGECREST, CA 93555

Drawing Title

EXTERIOR ELEVATIONS

Job No. 3055-0100

Sheet No. **A3.11**

Date 07/14/2025

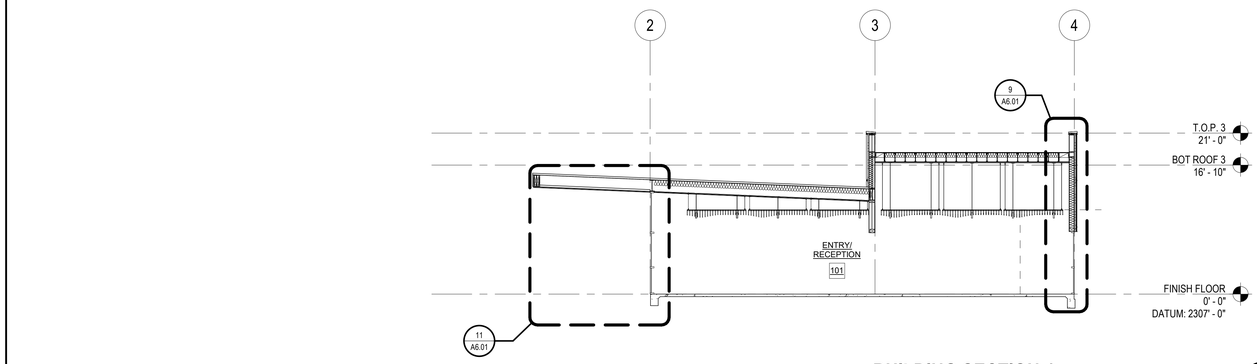

BUILDING SECTION 4

SCALE: 1/8" = 1'-0"

4 A4.01

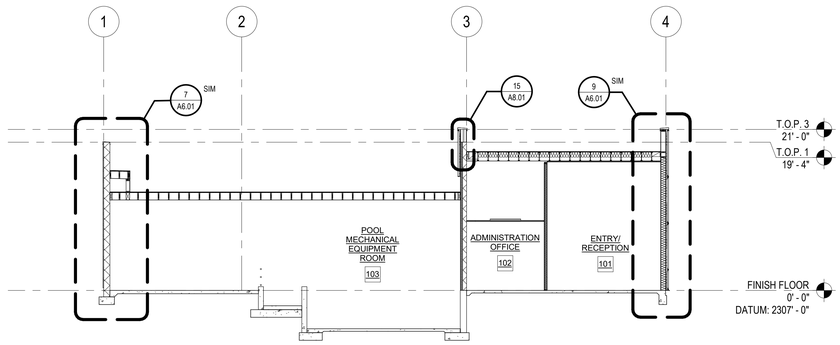

BUILDING SECTION 3

SCALE: 1/8" = 1'-0"

3 A4.01

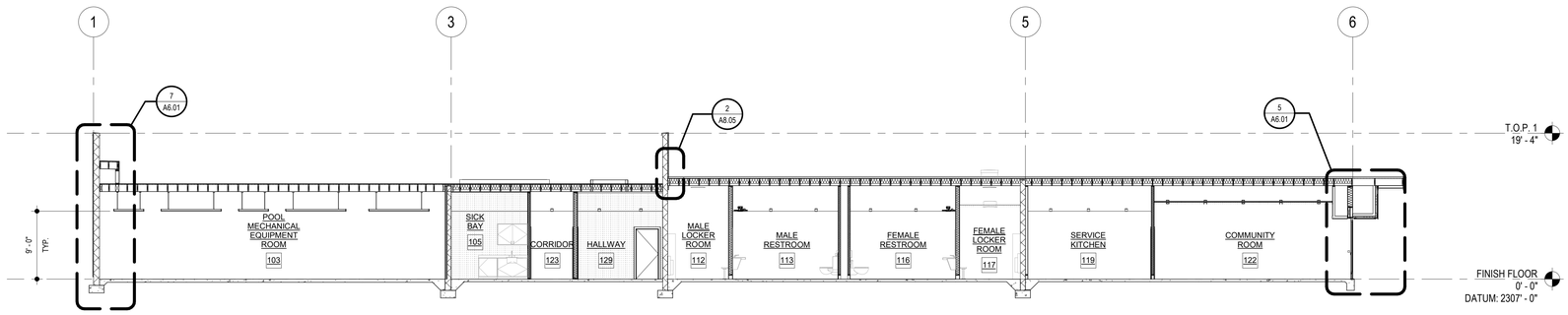

BUILDING SECTION 2

SCALE: 1/8" = 1'-0"

2 A4.01

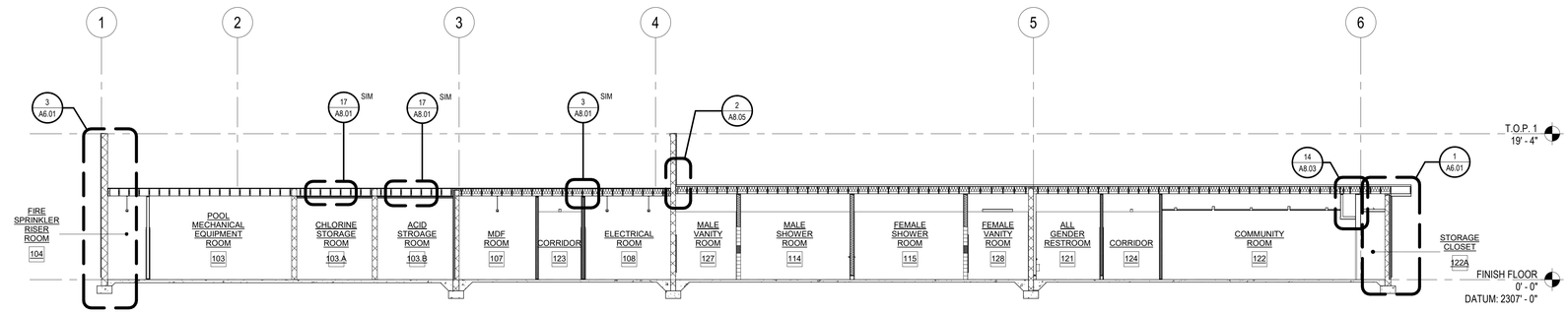

BUILDING SECTION 1

SCALE: 1/8" = 1'-0"

1 A4.01

GENERAL NOTES

1. REFER TO STRUCTURAL, MECHANICAL, PLUMBING, ELECTRICAL, AND FIRE ALARM DRAWINGS FOR ADDITIONAL APPLICABLE SCOPE OF WORK.

2. CONTRACTOR SHALL VERIFY ALL CONDITIONS PRIOR TO CONSTRUCTION. ALL DISCREPANCIES SHALL BE BROUGHT TO THE ATTENTION OF OWNER AND ARCHITECT PRIOR TO COMMENCING WORK.

3. ALL ROOF ELEVATIONS ARE DETERMINED BASED ON THE DISTANCE FROM THE FINISH FLOOR TO THE BOTTOM OF THE ROOF STRUCTURE AT ITS LOWEST POINT.

AGENCY

REVIEWED FOR CODE COMPLIANCE BY: WILLDAN ENGINEERING

Approval of these plans & specifications shall not be construed to be a permit for, or an approval of any violation of any Federal, State, County or City laws or ordinances. One set of approved plans must be kept on the job until completion.

9:24:06 AM Jul 21, 2025

FLEWELLING & MOODY
architects *for* education

HEADQUARTERS OFFICE:
815 Colorado Blvd. Suite 200
Los Angeles, California 90041
323.543.8300 fax 323.543.8198
E-Mail: fm-losangeles@flewelling-

ANTELOPE VALLEY OFFICE:
1035 West Lancaster Bouldvard
Lancaster, California 93534
661.949.0771 FAX 661.949.2843
E-Mail: fm-lancaster@flewelling-

An Employee Owned Corporation

ARCHITECT

LICENSED ARCHITECT — SCOTT T. SANDERS — C-14211 — STATE OF CALIFORNIA — 06/30/2025

CONSULTANT

Drawn by:

Check by:

Revisions

No.	Date	Description

All dimensions must be checked at the job by the contractor who accepts full responsibility for their accuracy under the contract. These plans & the specifications in connection therewith have been prepared for a specific site. Any and all responsibility for their use in whole or in part on any other site is hereby disclaimed by Flewelling & Moody.

CITY OF RIDGECREST

REPLACEMENT PROJECT

205 S WARNER ST, RIDGECREST, CA 93555

Drawing Title

BUILDING SECTIONS

Job No. 3055-0100

Sheet No. **A4.01**

Date 07/14/2025

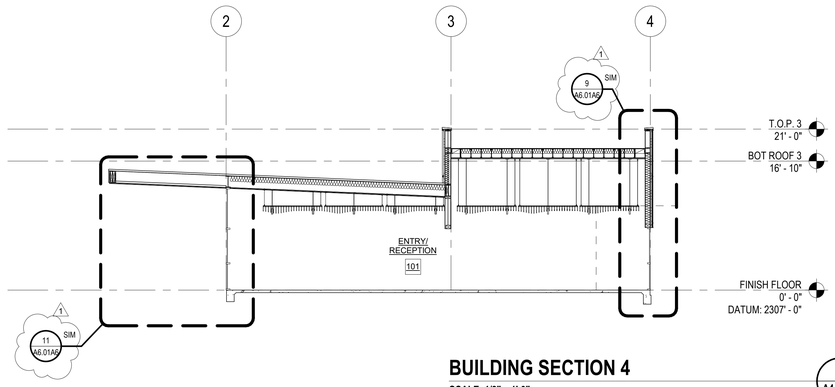

BUILDING SECTION 4

SCALE: 1/8" = 1'-0"

4 A4.01A6

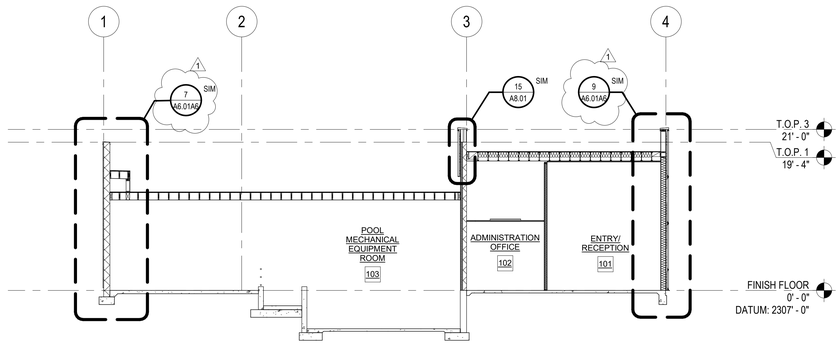

BUILDING SECTION 3

SCALE: 1/8" = 1'-0"

3 A4.01A6

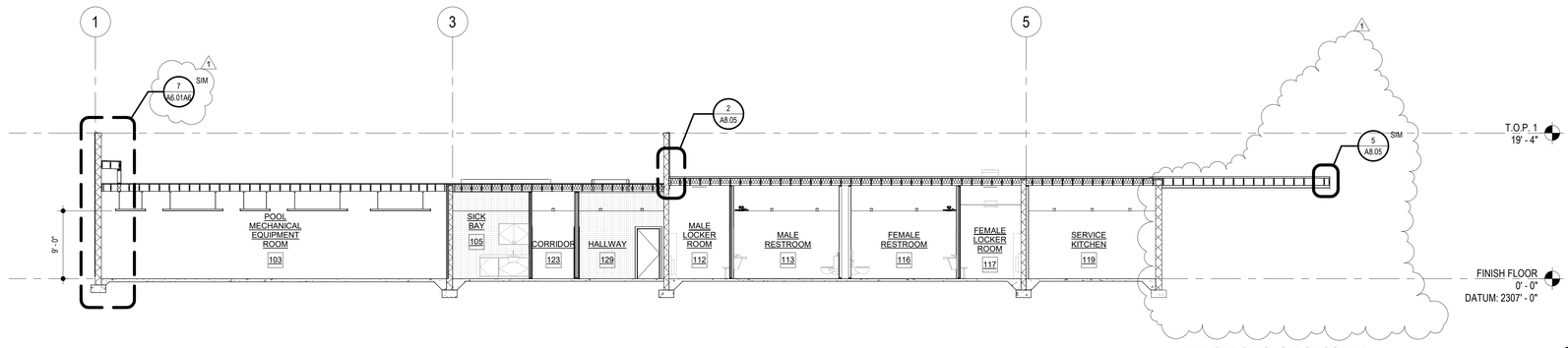

BUILDING SECTION 2

SCALE: 1/8" = 1'-0"

2 A4.01A6

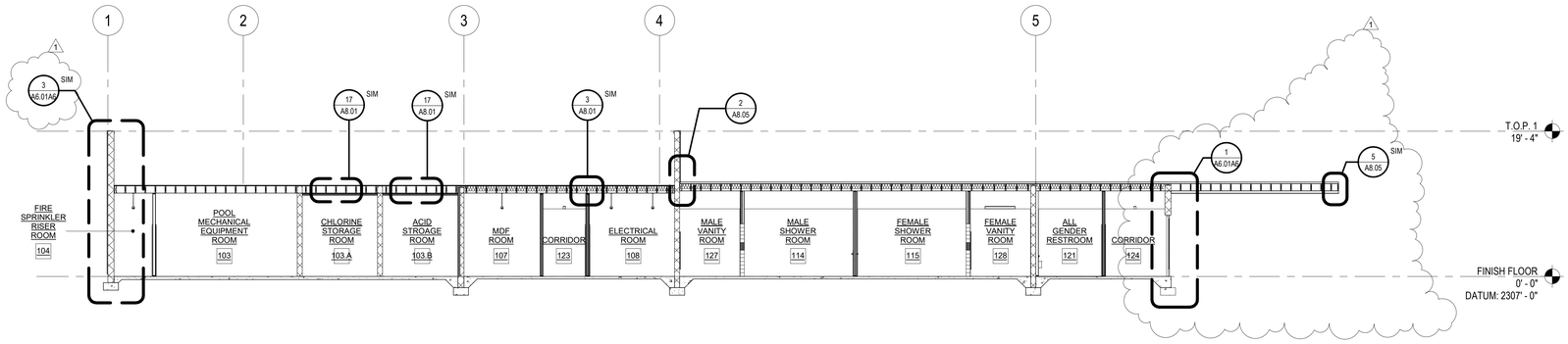

BUILDING SECTION 1

SCALE: 1/8" = 1'-0"

1 A4.01A6

GENERAL NOTES

1. REFER TO STRUCTURAL, MECHANICAL, PLUMBING, ELECTRICAL, AND FIRE ALARM DRAWINGS FOR ADDITIONAL APPLICABLE SCOPE OF WORK.

2. CONTRACTOR SHALL VERIFY ALL CONDITIONS PRIOR TO CONSTRUCTION. ALL DISCREPANCIES SHALL BE BROUGHT TO THE ATTENTION OF OWNER AND ARCHITECT PRIOR TO COMMENCING WORK.

3. ALL ROOF ELEVATIONS ARE DETERMINED BASED ON THE DISTANCE FROM THE FINISH FLOOR TO THE BOTTOM OF THE ROOF STRUCTURE AT ITS LOWEST POINT.

AGENCY

FLEWELLING & MOODY
architects *for* education

HEADQUARTERS OFFICE:
815 Colorado Blvd. Suite 200
Los Angeles, California 90041
323.543.8300 fax 323.543.8198
E-Mail: fm-losangeles@flewelling-

ANTELOPE VALLEY OFFICE:
1035 West Lancaster Bouldvard
Lancaster, California 93534
661.949.0771 FAX 661.949.2843
E-Mail: fm-lancaster@flewelling-

An Employee Owned Corporation

ARCHITECT

LICENSED ARCHITECT
C-14211
Exp. Date: 08/31/2025
STATE OF CALIFORNIA

CONSULTANT

Drawn by:

Check by:

Revisions

No.	Date	Description
1	08/27/2025	BID ALTERNATE

All dimensions must be checked at the job by the contractor who accepts full responsibility for their accuracy under the contract. These plans & the specifications in connection therewith have been prepared for a specific site. Any and all responsibility for their use in whole or in part on any other site is hereby disclaimed by Flewelling & Moody.

CITY OF RIDGECREST

REPLACEMENT PROJECT

205 S WARNER ST, RIDGECREST, CA 93555

Drawing Title

BUILDING SECTIONS ALT 6

Job No. 3055-0100

Date 12/20/2024

Sheet No. **A4.01A6**

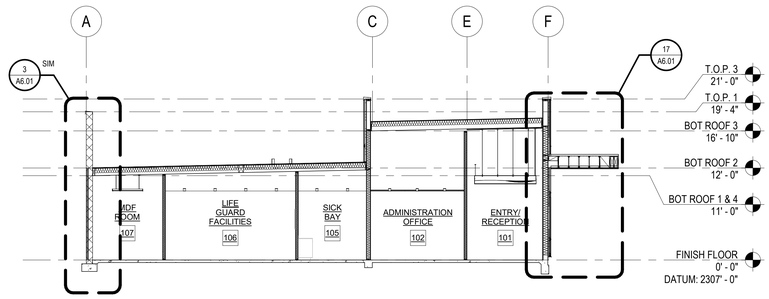

BUILDING SECTION 8

SCALE: 1/8" = 1'-0"

4
A4.02

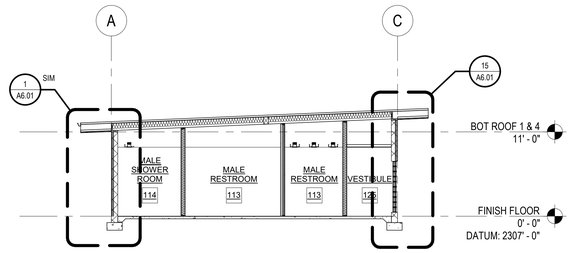

BUILDING SECTION 7

SCALE: 1/8" = 1'-0"

3
A4.02

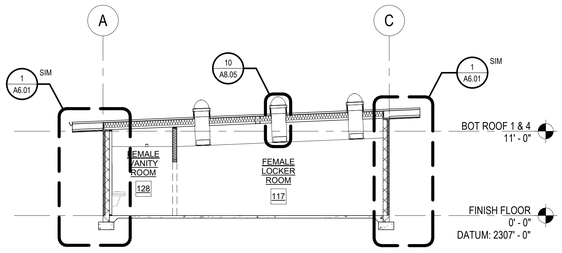

BUILDING SECTION 6

SCALE: 1/8" = 1'-0"

2
A4.02

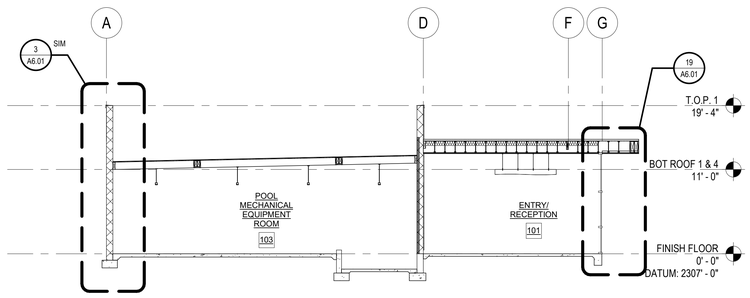

BUILDING SECTION 9

SCALE: 1/8" = 1'-0"

5
A4.02

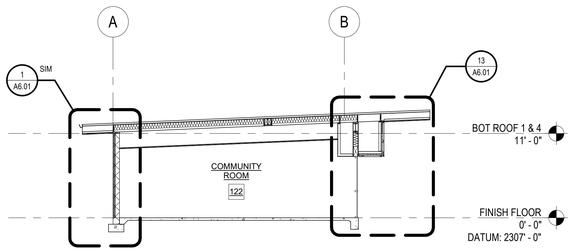

BUILDING SECTION 5

SCALE: 1/8" = 1'-0"

1
A4.02

GENERAL NOTES

1. REFER TO STRUCTURAL, MECHANICAL, PLUMBING, ELECTRICAL, POOL, AND FIRE ALARM DRAWINGS FOR ADDITIONAL APPLICABLE SCOPE OF WORK.

2. CONTRACTOR SHALL VERIFY ALL CONDITIONS PRIOR TO CONSTRUCTION. ALL DISCREPANCIES SHALL BE BROUGHT TO THE ATTENTION OF OWNER AND ARCHITECT PRIOR TO COMMENCING WORK.

3. ALL ROOF ELEVATIONS ARE DETERMINED BASED ON THE DISTANCE FROM THE FINISH FLOOR TO THE BOTTOM OF THE ROOF STRUCTURE AT ITS LOWEST POINT.

AGENCY

REVIEWED FOR CODE COMPLIANCE BY:
WILLDAN ENGINEERING

Approval of these plans & specifications shall not be construed to be a permit for, or an approval of any violation of any Federal, State, County or City laws or ordinances. One set of approved plans must be kept on the job until completion.

9:24:07 AM Jul 21, 2025

FLEWELLING & MOODY
architects *for* education

HEADQUARTERS OFFICE:
815 Colorado Blvd. Suite 200
Los Angeles, California 90041
323.543.8300 fax 323.543.8198
E-Mail: fm-losangeles@flewelling-

ANTELOPE VALLEY OFFICE:
1035 West Lancaster Bouldvard
Lancaster, California 93534
661.949.0771 FAX 661.949.2843
E-Mail: fm-lancaster@flewelling-

An Employee Owned Corporation

ARCHITECT

LICENSED ARCHITECT
C-1421
Exp. date: 08/31/2025
STATE OF CALIFORNIA

CONSULTANT

Drawn by:

Check by:

Revisions

No.	Date	Description

All dimensions must be checked at the job by the contractor who accepts full responsibility for their accuracy under the contract. These plans & the specifications in connection therewith have been prepared for a specific site. Any and all responsibility for their use in whole or in part on any other site is hereby disclaimed by Flewelling & Moody.

CITY OF RIDGECREST

REPLACEMENT PROJECT

205 S WARNER ST, RIDGECREST, CA 93555

Drawing Title

BUILDING SECTIONS

Job No.
3055-0100

Date
07/14/2025

Sheet No.
A4.02

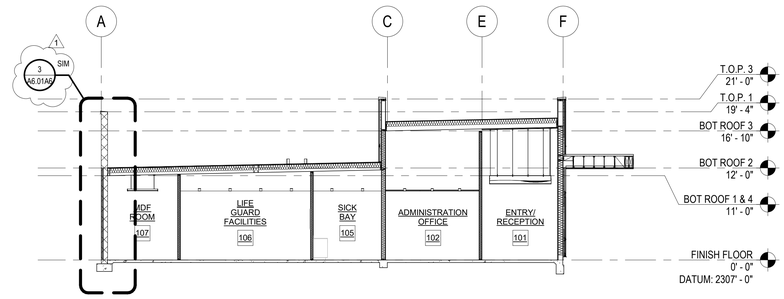

BUILDING SECTION 8

SCALE: 1/8" = 1'-0"

4 A4.02A6

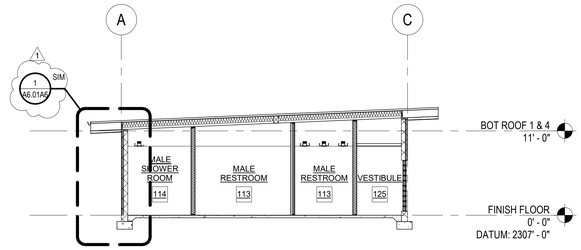

BUILDING SECTION 7

SCALE: 1/8" = 1'-0"

3 A4.02A6

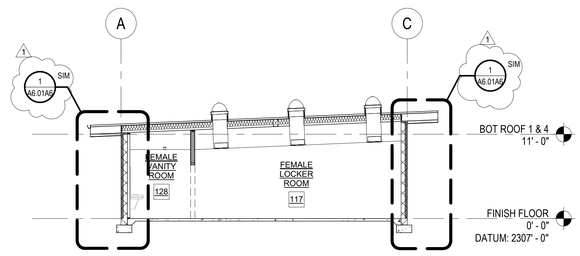

BUILDING SECTION 6

SCALE: 1/8" = 1'-0"

2 A4.02A6

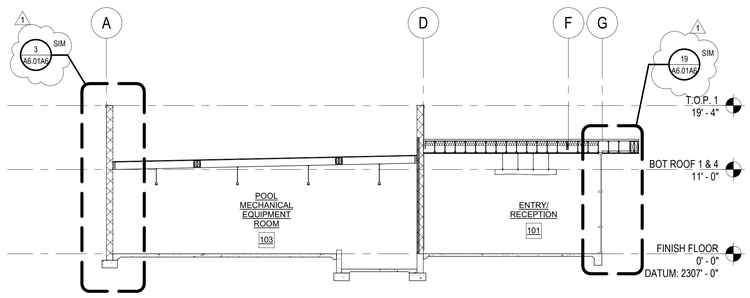

BUILDING SECTION 9

SCALE: 1/8" = 1'-0"

5 A4.02A6

GENERAL NOTES

1. REFER TO STRUCTURAL, MECHANICAL, PLUMBING, ELECTRICAL, POOL, AND FIRE ALARM DRAWINGS FOR ADDITIONAL APPLICABLE SCOPE OF WORK.

2. CONTRACTOR SHALL VERIFY ALL CONDITIONS PRIOR TO CONSTRUCTION. ALL DISCREPANCIES SHALL BE BROUGHT TO THE ATTENTION OF OWNER AND ARCHITECT PRIOR TO COMMENCING WORK.

3. ALL ROOF ELEVATIONS ARE DETERMINED BASED ON THE DISTANCE FROM THE FINISH FLOOR TO THE BOTTOM OF THE ROOF STRUCTURE AT ITS LOWEST POINT.

AGENCY

FLEWELLING & MOODY
architects *for* education

HEADQUARTERS OFFICE:
815 Colorado Blvd. Suite 200
Los Angeles, California 90041
323.543.8300 fax 323.543.8198
E-Mail: fm-losangeles@flewelling-

ANTELOPE VALLEY OFFICE:
1035 West Lancaster Bouldvard
Lancaster, California 93534
661.949.0771 FAX 661.949.2843
E-Mail: fm-lancaster@flewelling-

An Employee Owned Corporation

ARCHITECT

LICENSED ARCHITECT
C-14211
Exp. 08/31/2025
STATE OF CALIFORNIA

CONSULTANT

Drawn by:

Check by:

Revisions

No.	Date	Description
1	08/27/2025	BID ALTERNATE

All dimensions must be checked at the job by the contractor who accepts full responsibility for their accuracy under the contract. These plans & the specifications in connection therewith have been prepared for a specific site. Any and all responsibility for their use in whole or in part on any other site is hereby disclaimed by Flewelling & Moody.

CITY OF RIDGECREST

REPLACEMENT PROJECT

205 S WARNER ST, RIDGECREST, CA 93555

Drawing Title

BUILDING SECTIONS ALT 6

Job No. 3055-0100

Date 12/20/2024

Sheet No. **A4.02A6**

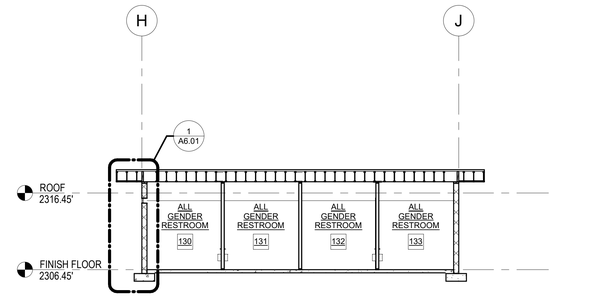

BUILDING SECTION 2

SCALE: 1/8" = 1'-0"

2
A4.11

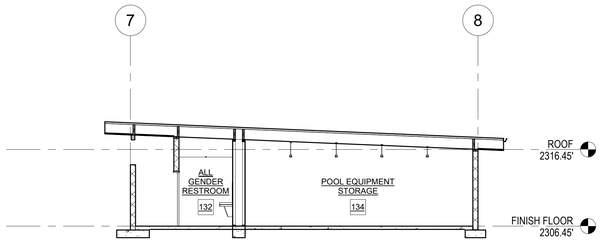

BUILDING SECTION 1

SCALE: 1/8" = 1'-0"

1
A4.11

GENERAL NOTES

1. REFER TO STRUCTURAL, MECHANICAL, PLUMBING, ELECTRICAL, AND FIRE ALARM DRAWINGS FOR ADDITIONAL APPLICABLE SCOPE OF WORK.

2. CONTRACTOR SHALL VERIFY ALL CONDITIONS PRIOR TO CONSTRUCTION. ALL DISCREPANCIES SHALL BE BROUGHT TO THE ATTENTION OF OWNER AND ARCHITECT PRIOR TO COMMENCING WORK.

AGENCY

REVIEWED FOR CODE COMPLIANCE BY: WILLDAN ENGINEERING

Approval of these plans & specifications shall not be construed to be a permit for, or an approval of any violation of any Federal, State, County or City laws or ordinances. One set of approved plans must be kept on the job until completion.

9:24:09 AM Jul 21, 2025

FLEWELLING & MOODY
architecture planning interiors

HEADQUARTERS OFFICE:
99 S. Lake Avenue, Suite 300
Pasadena, CA 91101
Phone: 323.543.8300
E-Mail: fm-pasadena@flewelling-moody.com

ANTELOPE VALLEY OFFICE:
1035 West Lancaster Bouldvard
Lancaster, California 93534
Phone: 661.949.0771
E-Mail: fm-lancaster@flewelling-moody.com

An Employee Owned Corporation

ARCHITECT



CONSULTANT

Drawn by: Author

Check by: Checker

Revisions

No.	Date	Description

All dimensions must be checked at the job by the contractor who accepts full responsibility for their accuracy under the contract. These plans & the specifications in connection therewith have been prepared for a specific site. Any and all responsibility for their use in whole or in part on any other site is hereby disclaimed by Flewelling & Moody.

CITY OF RIDGECREST

SGT. JOHN PINNEY MEMORIAL POOL REPLACEMENT PROJECT

205 S WARNER ST, RIDGECREST, CA 93555

Drawing Title

BUILDING SECTIONS

Job No. 3055-0100

Date 07/14/2025

Sheet No. **A4.11**

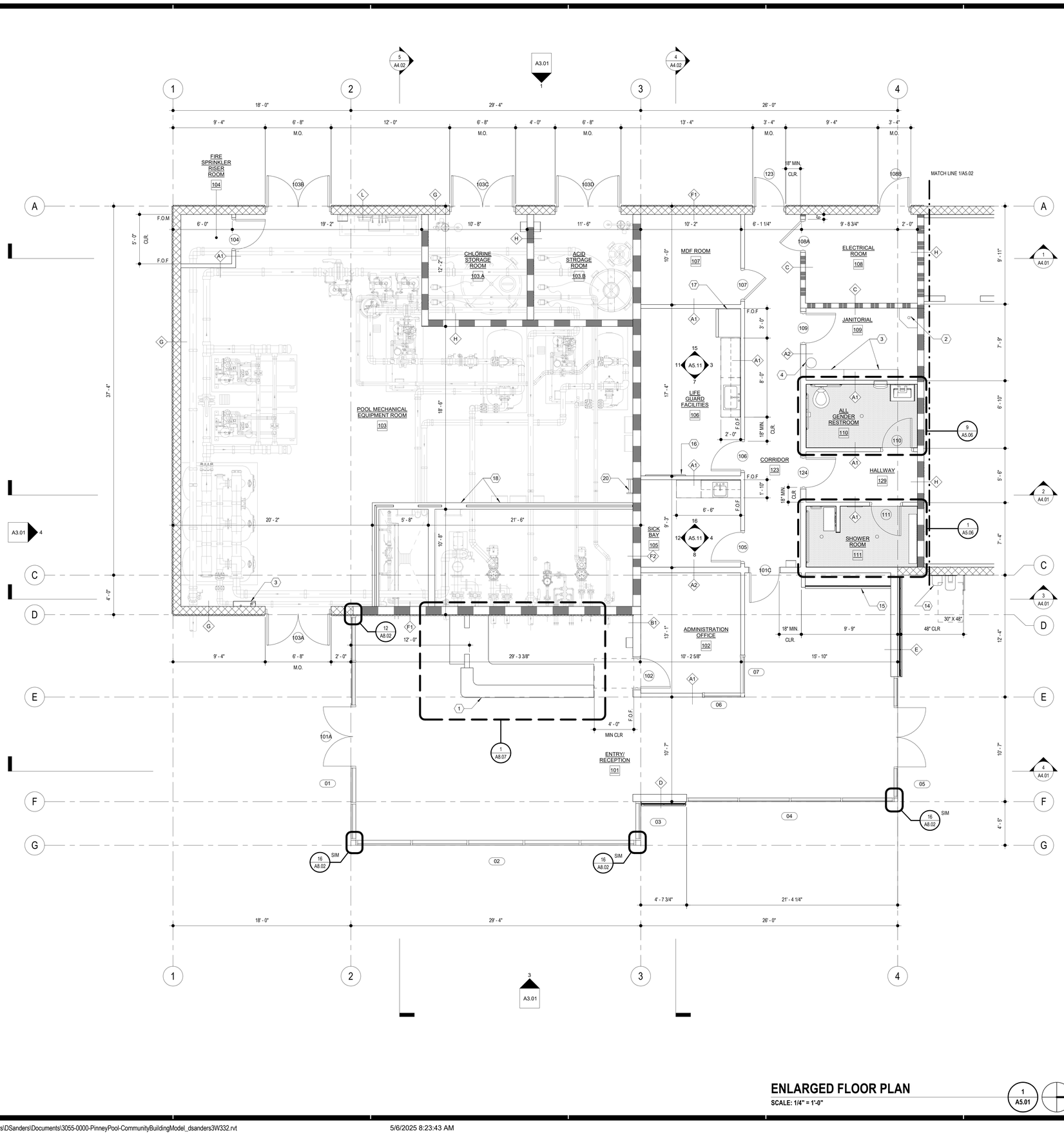

ENLARGED FLOOR PLAN

SCALE: 1/4" = 1'-0"

1 A5.01

N

GENERAL NOTES

1. REFER TO STRUCTURAL, MECHANICAL, PLUMBING, AND ELECTRICCAL FOR ADDITIONAL APPLICABLE SCOPE OF WORK.

2. CONTRACTOR SHALL VERIFY ALL CONDITIONS PRIOR TO CONSTRUCTION. IF THERE ARE ANY CONFLICTS BETWEEN THESE DOCUMENTS OR BETWEEN THESE DOCUMENTS AND THAT OF OTHER DESIGN TEAM CONSULTANTS, PLEASE NOTIFY THE ARCHITECT IN WRITING, IDENTIFYING THE AREAS IN QUESTION PRIOR TO INSTALLATION OR CONSTRUCTION.

3. DO NOT SCALE THE DRAWINGS. ONLY WRITTEN DIMENSIONS SHALL BE USED. UNLESS OTHERWISE NOTED, THE FOLLOWING DIMENSIONING CRITERIA SHALL BE USED:
   A. FOR GYPSUM BOARD (GWB) AND METAL/WOOD STUD WALL CONSTRUCTION, ALL DIMENSIONS ARE SHOWN TO THE FACE OF STUD. REFER TO THE RESTROOM DRAWINGS FINISH ASSEMBLIES APPLIED TO THE FACE OF GWB ASSEMBLIES.
   B. REFER TO SPECIFIC PARTITION TYPE ON PROJECT PARTITION SCHEDULE FOR DIMESIONS AND FOR ALL UL ASSEMBLY NUMBERS.
   C. DOOR FRAME HINGES ARE LOCATED 4" NOMINALLY OFF THE ADJACENT PERPENDICULAR WALL UNLESS OTHERWISE NOTED. ALL FINAL DOOR LOCATIONS SHALL BE CONFIRMED WITH ARCHITECT.
   D. DIMENSION STRINGS LISTED WITH A +/- INDICATING THAT THESE DIMSNIONS ARE TO BE WITHIN TOLERANCE WHILE DIMENSIONS OF OTHER ITEMS WITHOUT +/- SHALL BE HELD.

4. CONTRACTOR SHALL BE RESPONSIBLE FOR REVIEWING ALL PARTITIONING TAGS AND COORDINATING FINISH REQUIREMENTS, HOLLOW METAL AND WOOD FRAMES, ETC.

5. REFER TO SITE PLAN FOR LOCATION OF COORDINDATES ORIGIN POINT (X:0, Y:0).

6. SEE A8.06 FOR ADDITIONAL INFORMATION REGARDING REQUIRMENTS FOR ACCESSIBLE RESTROOM AND SHOWER COMPONENTS.

LEGEND

- 2 HR. FIRE RATED WALL
- 1 HR. FIRE RATED WALL
- WOOD STUD WALL
- CMU WALL
- 101 — DOOR TYPE, SEE DOOR SCHEDULE ON SHEET A7.01
- 1 — WINDOW TYPE, SEE DOOR SCHEDULE ON SHEET A7.01
- QUARRY TILE FLOORING. VERIFY DEPTH OF SLAB DEPRESSION PER MANUFACTURER RECOMMENDATION AS REQUIRED. SEE STRUCTURAL DWGS FOR ADDITIONAL INFORMATION
- CERAMIC TILE FLOORING. VERIFY DEPTH OF SLAB DEPRESSION PER MANUFACTURER RECOMMENDATION AS REQUIRED. SEE STRUCTURAL DWGS FOR ADDITIONAL INFORMATION
- X 0' - 0" Y 0' - 0" — DATUM POINT
- A1 — WALL TAG. SEE A8.01 FOR ADDITIONAL INFORMATION

CONSTRUCTION KEY NOTES

1. RECEPTION DESK. SEE A8.07 FOR ADDITIONAL INFORMATION
2. MOP SINK, SEE PLUMBING DWGS FOR ADDITIONAL INFORMATION
3. WALL MOUNTED TANKLESS WATER HEATER. SEE PLUMBING DWGS FOR ADDITIONAL INFORMATION
4. EXPANSION TANK INSTALLED AT TOP OF DOOR HEIGHT. SEE PLUMBING DWGS FOR ADDITIONAL INFORMATION
5. 36" LONG GRAB BAR. 832 SERIES, BY BRADLEY OR APPROVED EQUAL
6. SANITARY NAPKIN DISPOSAL, SEMI-RECESSED. MODEL 4737, BY BRADLEY OR APPROVED EQUAL
7. 42" LONG GRAB BAR. 832 SERIES, BY BRADLEY OR APPROVED EQUAL
8. TOILET PAPER DISPENSER , WALL MOUNTED. MODEL 5402, BY BRADLEY OR APPROVED EQUAL
9. ACCESSIBLE TOILET, WALL MOUNTED. SEE PLUMBING DWGS FOR ADDITIONAL INFORMATION
10. PAPER TOWEL DISPENSER, SEMI-RECESSED. DIPLOMAT SERIES MODEL 2A05, BY BRADLEY OR APPROVED EQUAL
11. SINK, OMNIDECK W/ WASHBAR 1, BY BRADLEY OR APPROVED EQUAL
12. 9 1/2" X 60" LENOX LOCKER PEDESTAL BENCH, BY BRADLEY OR APPROVED EQUAL
13. ACCESSIBLE IN-WALL SHOWER. HN3000 SERIES, BY BRADLEY OR APPROVED EQUAL
14. HI-LO DRINKING FOUNTAIN, SEE 9/A8.09 FOR ADDITIONAL INFORMATION
15. DISPLAY CABINET, SEE 15/A8.08 FOR ADDITIONAL INFORMATION
16. WALL MOUNTED TV. OWNER PROVIDED OWNER INSTALLED
17. REFRIGERATOR. OWNER PROVIDED CONTRACTOR INSTALLED
18. PUMP & BACKWASH PIT. SEE AQUATIC, STRUCTURAL AND PLUMBING DRAWINGS FOR ADDITIONAL INFORMATION
19. TOILET SEAT COVER DISPENSER, SURFACE MOUNTED. MODEL 583, BY BRADLEY OR APPROVED EQUAL
20. ROOF ACCESS LADDER. SEE A8.04 FOR ADDITIONAL INFORMATION

AGENCY

REVIEWED FOR CODE COMPLIANCE BY: WILLDAN ENGINEERING

Approval of these plans & specifications shall not be construed to be a permit for, or an approval of any violation of any Federal, State, County or City laws or ordinances. One set of approved plans must be kept on the job until completion.

9:24:10 AM Jul 21, 2025

FLEWELLING & MOODY
architecture planning interiors

HEADQUARTERS OFFICE:
99 S. Lake Avenue, Suite 300
Pasadena, CA 91101
Phone: 323.543.8300
E-Mail: fm-pasadena@flewelling-moody.com

ANTELOPE VALLEY OFFICE:
1035 West Lancaster Boulevard
Lancaster, California 93534
Phone: 661.949.0771
E-Mail: fm-lancaster@flewelling-moody.com

An Employee Owned Corporation

ARCHITECT

LICENSED ARCHITECT — MATT T. GARDNER — C-14211 — 06/30/2026 — STATE OF CALIFORNIA

CONSULTANT

Drawn by: Author
Check by: Checker
Revisions

No.	Date	Description

All dimensions must be checked at the job by the contractor who accepts full responsibility for their accuracy under the contract. These plans & the specifications in connection therewith have been prepared for a specific site. Any and all responsibility for their use in whole or in part on any other site is hereby disclaimed by Flewelling & Moody.

CITY OF RIDGECREST

SGT. JOHN PINNEY MEMORIAL POOL REPLACEMENT PROJECT

205 S WARNER ST, RIDGECREST, CA 93555

Drawing Title

ENLARGED FLOOR PLAN

Job No. 3055-0100

Sheet No. **A5.01**

Date 07/14/2025

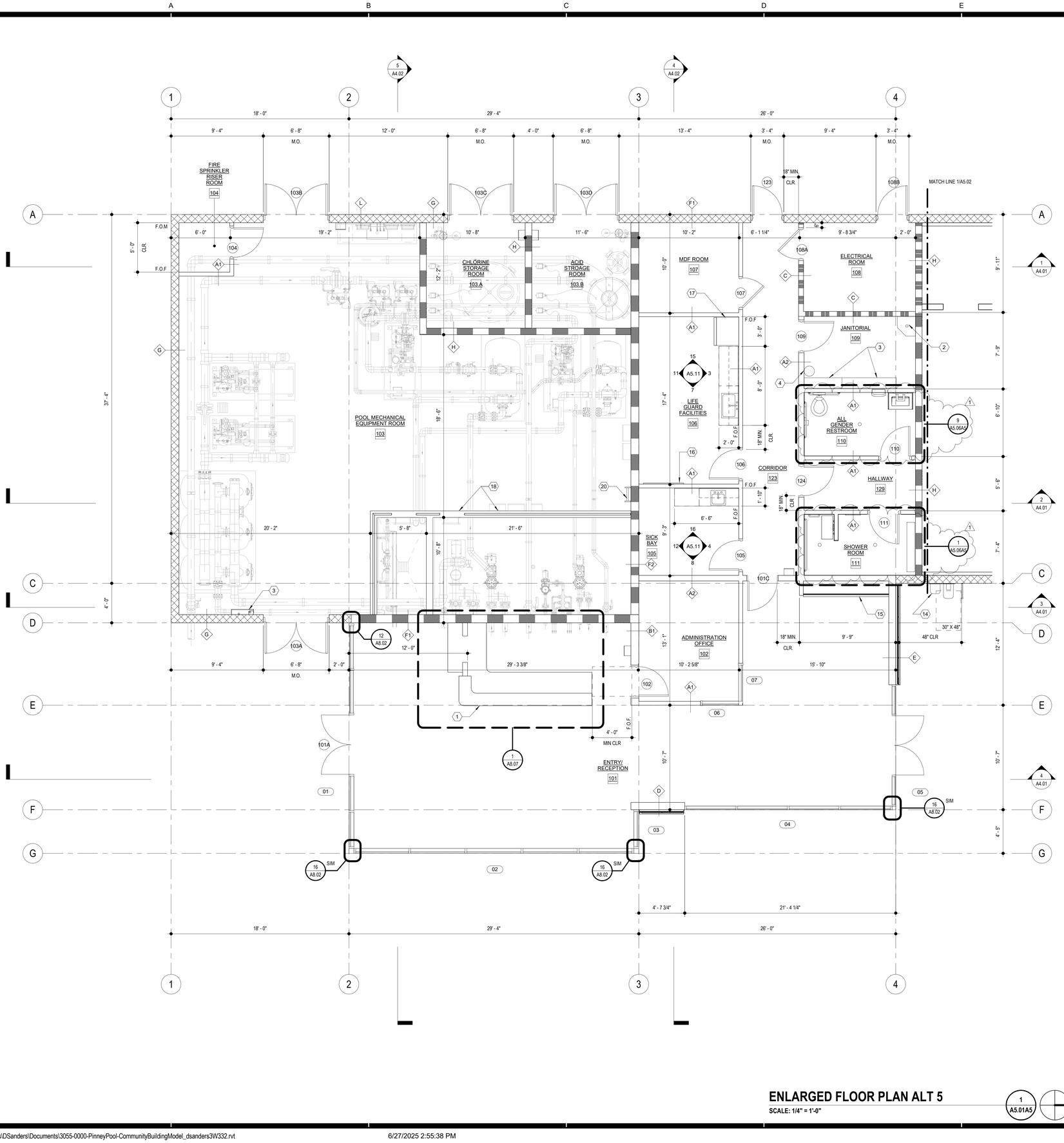

ENLARGED FLOOR PLAN ALT 5

SCALE: 1/4" = 1'-0"

1 A5.01A5

N

GENERAL NOTES

1. REFER TO STRUCTURAL, MECHANICAL, PLUMBING, AND ELECTRICCAL FOR ADDITIONAL APPLICABLE SCOPE OF WORK.

2. CONTRACTOR SHALL VERIFY ALL CONDITIONS PRIOR TO CONSTRUCTION. IF THERE ARE ANY CONFLICTS BETWEEN THESE DOCUMENTS OR BETWEEN THESE DOCUMENTS AND THAT OF OTHER DESIGN TEAM CONSULTANTS, PLEASE NOTIFY THE ARCHITECT IN WRITING, IDENTIFYING THE AREAS IN QUESTION PRIOR TO INSTALLATION OR CONSTRUCTION.

3. DO NOT SCALE THE DRAWINGS. ONLY WRITTEN DIMENSIONS SHALL BE USED. UNLESS OTHERWISE NOTED, THE FOLLOWING DIMENSIONING CRITERIA SHALL BE USED:
   A. FOR GYPSUM BOARD (GWB) AND METAL/WOOD STUD WALL CONSTRUCTION, ALL DIMENSIONS ARE SHOWN TO THE FACE OF STUD. REFER TO THE RESTROOM DRAWINGS FINISH ASSEMBLIES APPLIED TO THE FACE OF GWB ASSEMBLIES.
   B. REFER TO SPECIFIC PARTITION TYPE ON PROJECT PARTITION SCHEDULE FOR DIMESIONS AND FOR ALL UL ASSEMBLY NUMBERS.
   C. DOOR FRAME HINGES ARE LOCATED 4" NOMINALLY OFF THE ADJACENT PERPENDICULAR WALL UNLESS OTHERWISE NOTED. ALL FINAL DOOR LOCATIONS SHALL BE CONFIRMED WITH ARCHITECT.
   D. DIMENSION STRINGS LISTED WITH A +/- INDICATING THAT THESE DIMENIONS ARE TO BE WITHIN TOLERANCE WHILE DIMENSIONS OF OTHER ITEMS WITHOUT +/- SHALL BE HELD.

4. CONTRACTOR SHALL BE RESPONSIBLE FOR REVIEWING ALL PARTITIONING TAGS AND COORDINATING FINISH REQUIREMENTS, HOLLOW METAL AND WOOD FRAMES, ETC.

5. REFER TO SITE PLAN FOR LOCATION OF COORDINDATES ORIGIN POINT (X:0, Y:0).

6. SEE A8.06 FOR ADDITIONAL INFORMATION REGARDING REQUIRMENTS FOR ACCESSIBLE RESTROOM AND SHOWER COMPONENTS.

LEGEND

- 2 HR. FIRE RATED WALL
- 1 HR. FIRE RATED WALL
- WOOD STUD WALL
- CMU WALL
- 101 — DOOR TYPE, SEE DOOR SCHEDULE ON SHEET A7.01
- 1 — WINDOW TYPE, SEE DOOR SCHEDULE ON SHEET A7.01
- X 0' - 0" / Y 0' - 0" — DATUM POINT
- A1 — WALL TAG. SEE A8.01 FOR ADDITIONAL INFORMATION

CONSTRUCTION KEY NOTES

1. RECEPTION DESK. SEE A8.07 FOR ADDITIONAL INFORMATION
2. MOP SINK, SEE PLUMBING DWGS FOR ADDITIONAL INFORMATION
3. WALL MOUNTED TANKLESS WATER HEATER. SEE PLUMBING DWGS FOR ADDITIONAL INFORMATION
4. EXPANSION TANK INSTALLED AT TOP OF DOOR HEIGHT. SEE PLUMBING DWGS FOR ADDITIONAL INFORMATION
5. 36" LONG GRAB BAR. 832 SERIES, BY BRADLEY OR APPROVED EQUAL
6. SANITARY NAPKIN DISPOSAL, SEMI-RECESSED. MODEL 4737, BY BRADLEY OR APPROVED EQUAL
7. 42" LONG GRAB BAR. 832 SERIES, BY BRADLEY OR APPROVED EQUAL
8. TOILET PAPER DISPENSER , WALL MOUNTED. MODEL 5402, BY BRADLEY OR APPROVED EQUAL
9. ACCESSIBLE TOILET, WALL MOUNTED. SEE PLUMBING DWGS FOR ADDITIONAL INFORMATION
10. PAPER TOWEL DISPENSER, SEMI-RECESSED. DIPLOMAT SERIES MODEL 2A05, BY BRADLEY OR APPROVED EQUAL
11. SINK, OMNIDECK W/ WASHBAR 1, BY BRADLEY OR APPROVED EQUAL
12. 9 1/2" X 60" LENOX LOCKER PEDESTAL BENCH, BY BRADLEY OR APPROVED EQUAL
13. ACCESSIBLE IN-WALL SHOWER. HN3000 SERIES, BY BRADLEY OR APPROVED EQUAL
14. HI-LO DRINKING FOUNTAIN, SEE 9/A8.09 FOR ADDITIONAL INFORMATION
15. DISPLAY CABINET, SEE 15/A8.08 FOR ADDITIONAL INFORMATION
16. WALL MOUNTED TV. OWNER PROVIDED OWNER INSTALLED
17. REFRIGERATOR. OWNER PROVIDED CONTRACTOR INSTALLED
18. PUMP & BACKWASH PIT. SEE AQUATIC, STRUCTURAL AND PLUMBING DRAWINGS FOR ADDITIONAL INFORMATION
19. TOILET SEAT COVER DISPENSER, SURFACE MOUNTED. MODEL 583, BY BRADLEY OR APPROVED EQUAL
20. ROOF ACCESS LADDER. SEE A8.04 FOR ADDITIONAL INFORMATION

AGENCY

FLEWELLING & MOODY
architecture planning interiors

HEADQUARTERS OFFICE:
99 S. Lake Avenue, Suite 300
Pasadena, CA 91101
Phone: 323.543.8300
E-Mail: fm-pasadena@flewelling-moody.com

ANTELOPE VALLEY OFFICE:
1035 West Lancaster Boulevard
Lancaster, California 93534
Phone: 661.949.0771
E-Mail: fm-lancaster@flewelling-moody.com

An Employee Owned Corporation

ARCHITECT

LICENSED ARCHITECT — MATT T. GARDNER — C-14211 — 06/30/2026 — STATE OF CALIFORNIA

CONSULTANT

Drawn by: Author
Check by: Checker
Revisions

No.	Date	Description
1	08/27/2025	BID ALTERNATE

All dimensions must be checked at the job by the contractor who accepts full responsibility for their accuracy under the contract. These plans & the specifications in connection therewith have been prepared for a specific site. Any and all responsibility for their use in whole or in part on any other site is hereby disclaimed by Flewelling & Moody.

CITY OF RIDGECREST

SGT. JOHN PINNEY MEMORIAL POOL REPLACEMENT PROJECT

205 S WARNER ST, RIDGECREST, CA 93555

Drawing Title

ENLARGED FLOOR PLAN ALT 5

Job No. 3055-0100

Sheet No. **A5.01A5**

Date 12/20/2024

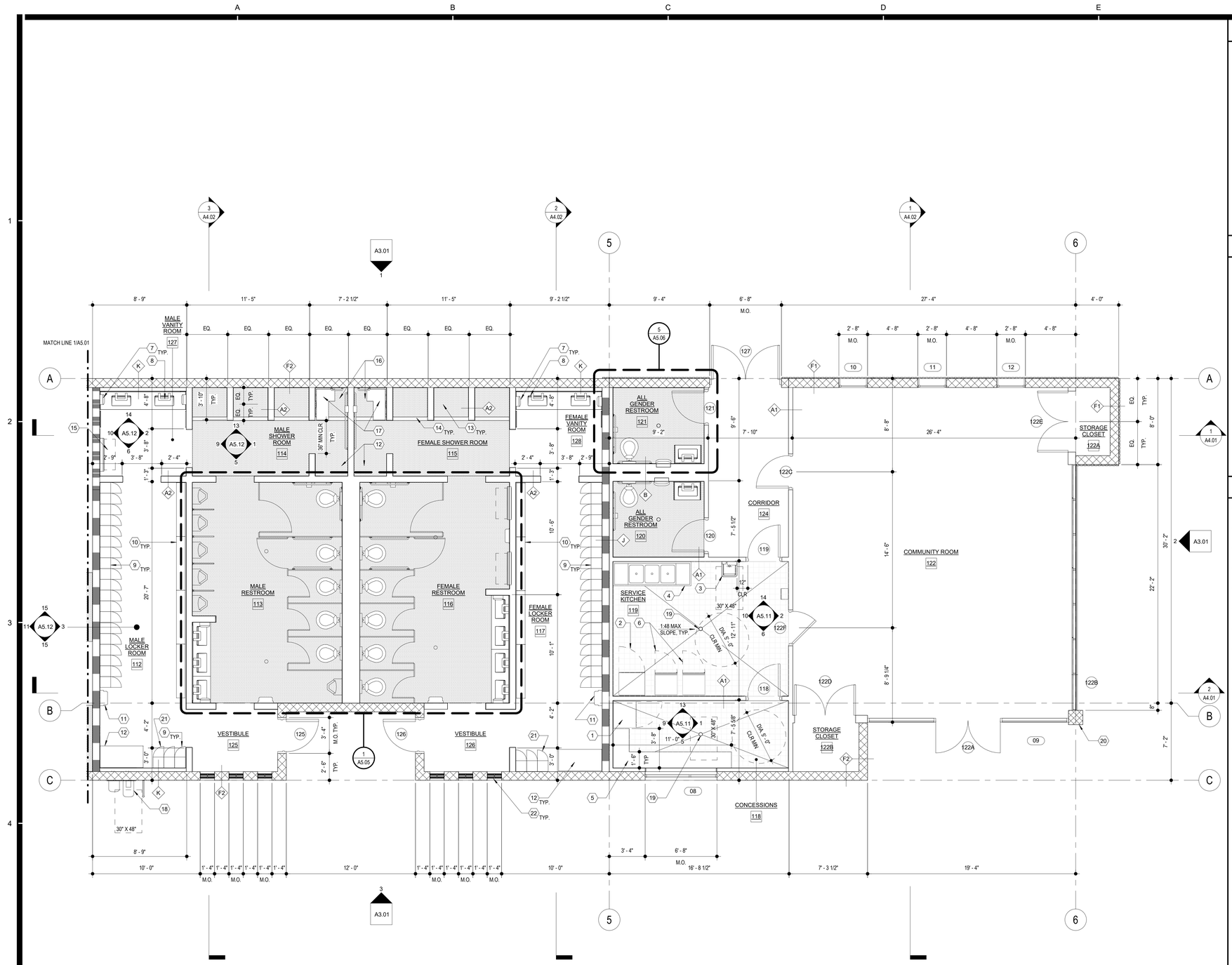

ENLARGED FLOOR PLAN

SCALE: 1/4" = 1'-0"

1 / A5.02

N

GENERAL NOTES

1. REFER TO STRUCTURAL, MECHANICAL, PLUMBING, AND ELECTRICCAL FOR ADDITIONAL APPLICABLE SCOPE OF WORK.

2. CONTRACTOR SHALL VERIFY ALL CONDITIONS PRIOR TO CONSTRUCTION. IF THERE ARE ANY CONFLICTS BETWEEN THESE DOCUMENTS OR BETWEEN THESE DOCUMENTS AND THAT OF OTHER DESIGN TEAM CONSULTANTS, PLEASE NOTIFY THE ARCHITECT IN WRITING, IDENTIFYING THE AREAS IN QUESTION PRIOR TO INSTALLATION OR CONSTRUCTION.

3. DO NOT SCALE THE DRAWINGS. ONLY WRITTEN DIMENSIONS SHALL BE USED. UNLESS OTHERWISE NOTED, THE FOLLOWING DIMENSIONING CRITERIA SHALL BE USED:
   A. FOR GYPSUM BOARD (GWB) AND METAL/WOOD STUD WALL CONSTRUCTION, ALL DIMENSIONS ARE SHOWN TO THE FACE OF STUD. REFER TO THE RESTROOM DRAWINGS FINISH ASSEMBLIES APPLIED TO THE FACE OF GWB ASSEMBLIES.
   B. REFER TO SPECIFIC PARTITION TYPE ON PROJECT PARTITION SCHEDULE FOR DIMESIONS AND FOR ALL UL ASSEMBLY NUMBERS.
   C. DOOR FRAME HINGES ARE LOCATED 4" NOMINALLY OFF THE ADJACENT PERPENDICULAR WALL UNLESS OTHERWISE NOTED. ALL FINAL DOOR LOCATIONS SHALL BE CONFIRMED WITH ARCHITECT.
   D. DIMENSION STRINGS LISTED WITH A +/- INDICATING THAT THESE DIMSNIONS ARE TO BE WITHIN TOLERANCE WHILE DIMENSIONS OF OTHER ITEMS WITHOUT +/- SHALL BE HELD.

4. CONTRACTOR SHALL BE RESPONSIBLE FOR REVIEWING ALL PARTITIONING TAGS AND COORDINATING FINISH REQUIREMENTS, HOLLOW METAL AND WOOD FRAMES, ETC.

5. REFER TO SITE PLAN FOR LOCATION OF COORDINDATES ORIGIN POINT (X:0, Y:0).

6. SEE A8.06 FOR ADDITIONAL INFORMATION REGARDING REQUIRMENTS FOR ACCESSIBLE RESTROOM AND SHOWER COMPONENTS.

LEGEND

- 1 HR. FIRE RATED WALL
- 2 HR. FIRE RATED WALL
- WOOD STUD WALL
- CMU WALL
- 101 — DOOR TYPE, SEE DOOR SCHEDULE ON SHEET A7.01
- 1 — WINDOW TYPE, SEE DOOR SCHEDULE ON SHEET A7.01
- QUARRY TILE FLOORING. VERIFY DEPTH OF SLAB DEPRESSION PER MANUFACTURER RECOMMENDATION AS REQUIRED. SEE STRUCTURAL DWGS FOR ADDITIONAL INFORMATION
- CERAMIC TILE FLOORING. VERIFY DEPTH OF SLAB DEPRESSION PER MANUFACTURER RECOMMENDATION AS REQUIRED. SEE STRUCTURAL DWGS FOR ADDITIONAL INFORMATION
- A1 — WALL TAG. SEE A8.01 FOR ADDITIONAL INFORMATION

RECONSTRUCTION KEY NOTES

1. 29" SOLID DOOR REACH-IN FREEZER. OWNER PROVIDED CONTRACTOR INSTALLED
2. 29" SOLID DOOR REACH-IN REFRIGERATOR. OWNER PROVIDED CONTRACTOR INSTALLED
3. WALL MOUNTED SINK. MODEL 600HS17 BY REGENCY TABLES AND SINKS OR APPROVED EQUAL
4. THREE COMPARTMENT SINK W/ LEFT DRAINBOARD. MODEL 600S3162018X BY REGENCY TABLES AND SINKS OR APPROVED EQUAL
5. 1-1/4" STAINLESS STEEL COUNTERTOP
6. FULL SIZE FOOD WARMER. OWNER PROVIDED CONTRACTOR INSTALLED
7. PAPER TOWEL DISPENSER, WALL MOUNTED. DIPLOMAT 2A10, BY BRADLEY OR APPROVED EQUAL
8. PAPER TOWEL DISPENSER, WALL MOUNTED. DIPLOMAT 2A10, BY BRADLEY OR APPROVED EQUAL
9. STANDARD LOCKER, BY BRADLEY OR APPROVED EQUAL
10. LENOX LOCKER PEDESTAL BENCH, BY BRADLEY OR APPROVED EQUAL
11. WASTE RECEPTACLE, SURFACE MOUNTED. MODEL 344, BY BRADLEY OR APPROVED EQUAL
12. 24" X 48" LENOX LOCKER PEDESTAL BENCH, BY BRADLEY OR APPROVED EQUAL
13. INDIVIDUAL FLUSH MOUNTED WALL SHOWER. MODEL WS-1F, BY BRADLEY OR APPROVED EQUAL
14. 4" CHANNEL DRAIN. SEE PLUMBING DRAWINGS FOR ADDITIONAL INFORMATION
15. BABY CHANGING STATION, WALL MOUNTED. MODEL 962, BY BRADLEY OR APPROVED EQUAL WITH OPERABLE PARTS AT 48" MAX ABOVE FINISH FLOOR
16. ALTERNATE ROLL-IN TYPE SHOWER COMPARTMENT. SEE 1/A5.06 FOR ADDITIONAL INFORMATION REAGRDING CLEARANCES AND MOUNTING HIGHTS FOR ACCESSIBLE COMPONENTS
17. L-SHAPED SHOWER SEAT. SEE 7/A.09 FOR ADDITIONAL INFORMATION
18. HI-LO DRINKING FOUNTAIN. SEE 9/A8.09 FOR ADDITIONAL INFORMATION
19. FLOOR DRAIN. SEE PLUMBING DRAWINGS FOR ADDITIONAL INFORMATION
20. CONCRETE BLOCK COLUMN PRECISION VERTICAL SCORE BY ORCO OR APPROVED EQUAL. SEE STRUCTURAL DWGS FOR ADDITIONAL INFORMATION
21. ACCESSIBLE LOCKER, BY BRADLEY OR APPROVAED EQUAL
22. GLASS BLOCK. SEE 14/A8.02 FOR ADDITIONAL INFORMATION

AGENCY

REVIEWED FOR CODE COMPLIANCE BY: WILLDAN ENGINEERING

Approval of these plans & specifications shall not be construed to be a permit for, or an approval of any violation of any Federal, State, County or City laws or ordinances. One set of approved plans must be kept on the job until completion.

9:24:11 AM Jul 21, 2025

FLEWELLING & MOODY
architecture planning interiors

HEADQUARTERS OFFICE:
99 S. Lake Avenue, Suite 300
Pasadena, CA 91101
Phone: 323.543.8300
E-Mail: fm-pasadena@flewelling-moody.com

ANTELOPE VALLEY OFFICE:
1035 West Lancaster Boulevard
Lancaster, California 93534
Phone: 661.949.0771
E-Mail: fm-lancaster@flewelling-moody.com

An Employee Owned Corporation

ARCHITECT

LICENSED ARCHITECT — MATT T. GABBERT — C-14211 — 06/30/2025 — STATE OF CALIFORNIA

CONSULTANT

Drawn by: Author
Check by: Checker
Revisions

No.	Date	Description

All dimensions must be checked at the job by the contractor who accepts full responsibility for their accuracy under the contract. These plans & the specifications in connection therewith have been prepared for a specific site. Any and all responsibility for their use in whole or in part on any other site is hereby disclaimed by Flewelling & Moody.

CITY OF RIDGECREST

SGT. JOHN PINNEY MEMORIAL POOL REPLACEMENT PROJECT

205 S WARNER ST, RIDGECREST, CA 93555

Drawing Title

ENLARGED FLOOR PLAN

Job No. 3055-0100

Sheet No. **A5.02**

Date 07/14/2025

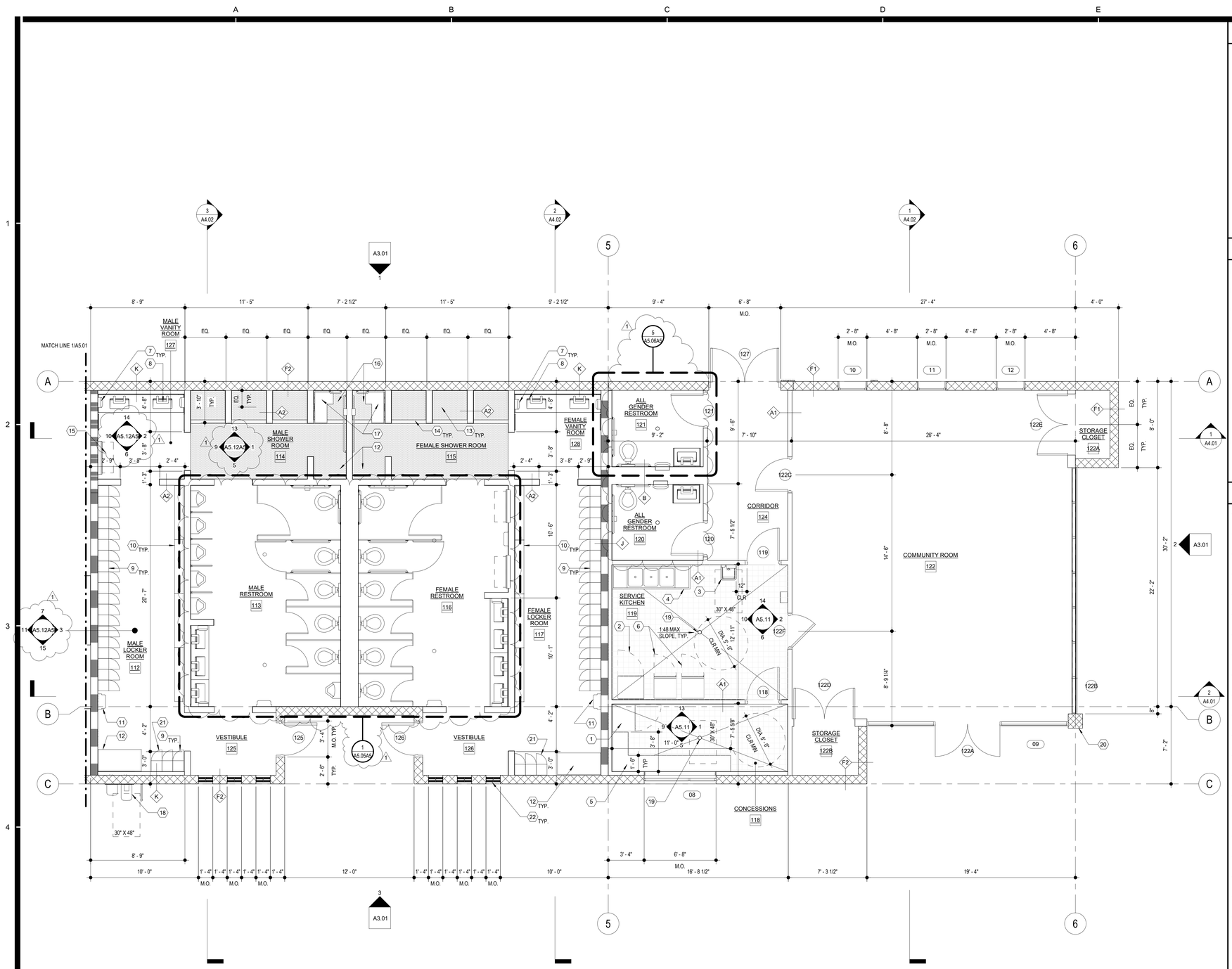

ENLARGED FLOOR PLAN

SCALE: 1/4" = 1'-0"

1 A5.02A5

N

GENERAL NOTES

1. REFER TO STRUCTURAL, MECHANICAL, PLUMBING, AND ELECTRICCAL FOR ADDITIONAL APPLICABLE SCOPE OF WORK.

2. CONTRACTOR SHALL VERIFY ALL CONDITIONS PRIOR TO CONSTRUCTION. IF THERE ARE ANY CONFLICTS BETWEEN THESE DOCUMENTS OR BETWEEN THESE DOCUMENTS AND THAT OF OTHER DESIGN TEAM CONSULTANTS, PLEASE NOTIFY THE ARCHITECT IN WRITING, IDENTIFYING THE AREAS IN QUESTION PRIOR TO INSTALLATION OR CONSTRUCTION.

3. DO NOT SCALE THE DRAWINGS. ONLY WRITTEN DIMENSIONS SHALL BE USED. UNLESS OTHERWISE NOTED, THE FOLLOWING DIMENSIONING CRITERIA SHALL BE USED:
   A. FOR GYPSUM BOARD (GWB) AND METAL/WOOD STUD WALL CONSTRUCTION, ALL DIMENSIONS ARE SHOWN TO THE FACE OF STUD. REFER TO THE RESTROOM DRAWINGS FINISH ASSEMBLIES APPLIED TO THE FACE OF GWB ASSEMBLIES.
   B. REFER TO SPECIFIC PARTITION TYPE ON PROJECT PARTITION SCHEDULE FOR DIMESIONS AND FOR ALL UL ASSEMBLY NUMBERS.
   C. DOOR FRAME HINGES ARE LOCATED 4" NOMINALLY OFF THE ADJACENT PERPENDICULAR WALL UNLESS OTHERWISE NOTED. ALL FINAL DOOR LOCATIONS SHALL BE CONFIRMED WITH ARCHITECT.
   D. DIMENSION STRINGS LISTED WITH A +/- INDICATING THAT THESE DIMSNIONS ARE TO BE WITHIN TOLERANCE WHILE DIMENSIONS OF OTHER ITEMS WITHOUT +/- SHALL BE HELD.

4. CONTRACTOR SHALL BE RESPONSIBLE FOR REVIEWING ALL PARTITIONING TAGS AND COORDINATING FINISH REQUIREMENTS, HOLLOW METAL AND WOOD FRAMES, ETC.

5. REFER TO SITE PLAN FOR LOCATION OF COORDINDATES ORIGIN POINT (X:0, Y:0).

6. SEE A8.06 FOR ADDITIONAL INFORMATION REGARDING REQUIRMENTS FOR ACCESSIBLE RESTROOM AND SHOWER COMPONENTS.

LEGEND

- 1 HR. FIRE RATED WALL
- 2 HR. FIRE RATED WALL
- WOOD STUD WALL
- CMU WALL
- 101 — DOOR TYPE, SEE DOOR SCHEDULE ON SHEET A7.01
- 1 — WINDOW TYPE, SEE DOOR SCHEDULE ON SHEET A7.01
- QUARRY TILE FLOORING. VERIFY DEPTH OF SLAB DEPRESSION PER MANUFACTURER RECOMMENDATION AS REQUIRED. SEE STRUCTURAL DWGS FOR ADDITIONAL INFORMATION
- CERAMIC TILE FLOORING. VERIFY DEPTH OF SLAB DEPRESSION PER MANUFACTURER RECOMMENDATION AS REQUIRED. SEE STRUCTURAL DWGS FOR ADDITIONAL INFORMATION
- A1 — WALL TAG. SEE A8.01 FOR ADDITIONAL INFORMATION

RECONSTRUCTION KEY NOTES

1. 29" SOLID DOOR REACH-IN FREEZER. OWNER PROVIDED CONTRACTOR INSTALLED
2. 29" SOLID DOOR REACH-IN REFRIGERATOR. OWNER PROVIDED CONTRACTOR INSTALLED
3. WALL MOUNTED SINK. MODEL 600HS17 BY REGENCY TABLES AND SINKS OR APPROVED EQUAL
4. THREE COMPARTMENT SINK W/ LEFT DRAINBOARD. MODEL 600S3162018X BY REGENCY TABLES AND SINKS OR APPROVED EQUAL
5. 1-1/4" STAINLESS STEEL COUNTERTOP
6. FULL SIZE FOOD WARMER. OWNER PROVIDED CONTRACTOR INSTALLED
7. PAPER TOWEL DISPENSER, WALL MOUNTED. DIPLOMAT 2A10, BY BRADLEY OR APPROVED EQUAL
8. PAPER TOWEL DISPENSER, WALL MOUNTED. DIPLOMAT 2A10, BY BRADLEY OR APPROVED EQUAL
9. STANDARD LOCKER, BY BRADLEY OR APPROVED EQUAL
10. LENOX LOCKER PEDESTAL BENCH, BY BRADLEY OR APPROVED EQUAL
11. WASTE RECEPTACLE, SURFACE MOUNTED. MODEL 344, BY BRADLEY OR APPROVED EQUAL
12. 24" X 48" LENOX LOCKER PEDESTAL BENCH, BY BRADLEY OR APPROVED EQUAL
13. INDIVIDUAL FLUSH MOUNTED WALL SHOWER. MODEL WS-1F, BY BRADLEY OR APPROVED EQUAL
14. 4" CHANNEL DRAIN. SEE PLUMBING DRAWINGS FOR ADDITIONAL INFORMATION
15. BABY CHANGING STATION, WALL MOUNTED. MODEL 962, BY BRADLEY OR APPROVED EQUAL WITH OPERABLE PARTS AT 48" MAX ABOVE FINISH FLOOR
16. ALTERNATE ROLL-IN TYPE SHOWER COMPARTMENT. SEE 1/A5.06A5 FOR ADDITIONAL INFORMATION REAGRDING CLEARANCES AND MOUNTING HIGHTS FOR ACCESSIBLE COMPONENTS
17. L-SHAPED SHOWER SEAT. SEE 7/A.09 FOR ADDITIONAL INFORMATION
18. HI-LO DRINKING FOUNTAIN. SEE 9/A8.09 FOR ADDITIONAL INFORMATION
19. FLOOR DRAIN. SEE PLUMBING DRAWINGS FOR ADDITIONAL INFORMATION
20. CONCRETE BLOCK COLUMN PRECISION VERTICAL SCORE BY ORCO OR APPROVED EQUAL. SEE STRUCTURAL DWGS FOR ADDITIONAL INFORMATION
21. ACCESSIBLE LOCKER, BY BRADLEY OR APPROVAED EQUAL
22. GLASS BLOCK. SEE 14/A8.02 FOR ADDITIONAL INFORMATION

AGENCY

FLEWELLING & MOODY
architecture planning interiors

HEADQUARTERS OFFICE:
99 S. Lake Avenue, Suite 300
Pasadena, CA 91101
Phone: 323.543.8300
E-Mail: fm-pasadena@flewelling-moody.com

ANTELOPE VALLEY OFFICE:
1035 West Lancaster Boulevard
Lancaster, California 93534
Phone: 661.949.0771
E-Mail: fm-lancaster@flewelling-moody.com

An Employee Owned Corporation

ARCHITECT

LICENSED ARCHITECT — MATT T. GABBERT — C-14211 — 08/31/2025 — STATE OF CALIFORNIA

CONSULTANT

Drawn by: Author
Check by: Checker
Revisions

No.	Date	Description
1	08/27/2025	BID ALTERNATE

All dimensions must be checked at the job by the contractor who accepts full responsibility for their accuracy under the contract. These plans & the specifications in connection therewith have been prepared for a specific site. Any and all responsibility for their use in whole or in part on any other site is hereby disclaimed by Flewelling & Moody.

CITY OF RIDGECREST

SGT. JOHN PINNEY MEMORIAL POOL REPLACEMENT PROJECT

205 S WARNER ST, RIDGECREST, CA 93555

Drawing Title

ENLARGED FLOOR PLAN ALT 5

Job No. 3055-0100
Sheet No. **A5.02A5**
Date 12/20/2024

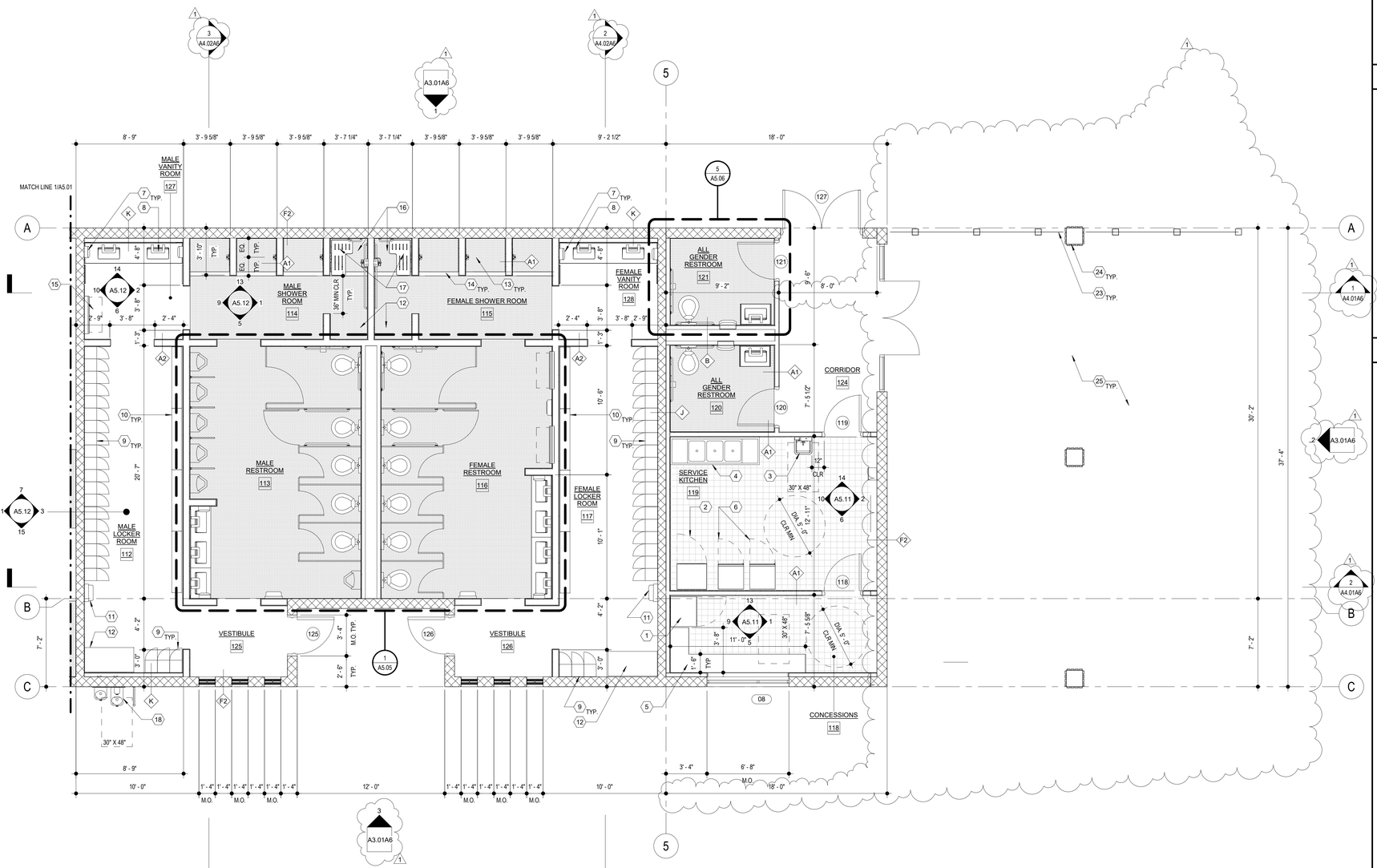

GENERAL NOTES

1. REFER TO STRUCTURAL, MECHANICAL, PLUMBING, AND ELECTRICCAL FOR ADDITIONAL APPLICABLE SCOPE OF WORK.

2. CONTRACTOR SHALL VERIFY ALL CONDITIONS PRIOR TO CONSTRUCTION. IF THERE ARE ANY CONFLICTS BETWEEN THESE DOCUMENTS OR BETWEEN THESE DOCUMENTS AND THAT OF OTHER DESIGN TEAM CONSULTANTS, PLEASE NOTIFY THE ARCHITECT IN WRITING, IDENTIFYING THE AREAS IN QUESTION PRIOR TO INSTALLATION OR CONSTRUCTION.

3. DO NOT SCALE THE DRAWINGS. ONLY WRITTEN DIMENSIONS SHALL BE USED. UNLESS OTHERWISE NOTED, THE FOLLOWING DIMENSIONING CRITERIA SHALL BE USED:
   A. FOR GYPSUM BOARD (GWB) AND METAL/WOOD STUD WALL CONSTRUCTION, ALL DIMENSIONS ARE SHOWN TO THE FACE OF STUD. REFER TO THE RESTROOM DRAWINGS FINISH ASSEMBLIES APPLIED TO THE FACE OF GWB ASSEMBLIES.
   B. REFER TO SPECIFIC PARTITION TYPE ON PROJECT PARTITION SCHEDULE FOR DIMESIONS AND FOR ALL UL ASSEMBLY NUMBERS.
   C. DOOR FRAME HINGES ARE LOCATED 4" NOMINALLY OFF THE ADJACENT PERPENDICULAR WALL UNLESS OTHERWISE NOTED. ALL FINAL DOOR LOCATIONS SHALL BE CONFIRMED WITH ARCHITECT.
   D. DIMENSION STRINGS LISTED WITH A +/- INDICATING THAT THESE DIMSNIONS ARE TO BE WITHIN TOLERANCE WHILE DIMENSIONS OF OTHER ITEMS WITHOUT +/- SHALL BE HELD.

4. CONTRACTOR SHALL BE RESPONSIBLE FOR REVIEWING ALL PARTITIONING TAGS AND COORDINATING FINISH REQUIREMENTS, HOLLOW METAL AND WOOD FRAMES, ETC.

5. REFER TO SITE PLAN FOR LOCATION OF COORDINDATES ORIGIN POINT (X:0, Y:0).

6. SEE A8.06 FOR ADDITIONAL INFORMATION REGARDING REQUIRMENTS FOR ACCESSIBLE RESTROOM AND SHOWER COMPONENTS.

LEGEND

- 1 HR. FIRE RATED WALL
- 2 HR. FIRE RATED WALL
- WOOD STUD WALL
- CMU WALL
- 101 — DOOR TYPE, SEE DOOR SCHEDULE ON SHEET A7.01
- 1 — WINDOW TYPE, SEE DOOR SCHEDULE ON SHEET A7.01
- QUARRY TILE FLOORING. VERIFY DEPTH OF SLAB DEPRESSION PER MANUFACTURER RECOMMENDATION AS REQUIRED. SEE STRUCTURAL DWGS FOR ADDITIONAL INFORMATION
- CERAMIC TILE FLOORING. VERIFY DEPTH OF SLAB DEPRESSION PER MANUFACTURER RECOMMENDATION AS REQUIRED. SEE STRUCTURAL DWGS FOR ADDITIONAL INFORMATION
- A1 — WALL TAG. SEE A8.01 FOR ADDITIONAL INFORMATION

RECONSTRUCTION KEY NOTES

1. 29" SOLID DOOR REACH-IN FREEZER. OWNER PROVIDED CONTRACTOR INSTALLED
2. 29" SOLID DOOR REACH-IN REFRIGERATOR. OWNER PROVIDED CONTRACTOR INSTALLED
3. WALL MOUNTED SINK. MODEL 600HS17 BY REGENCY TABLES AND SINKS OR APPROVED EQUAL
4. THREE COMPARTMENT SINK W/ LEFT DRAINBOARD. MODEL 600S3162018X BY REGENCY TABLES AND SINKS OR APPROVED EQUAL
5. 1-1/4" STAINLESS STEEL COUNTERTOP
6. FULL SIZE FOOD WARMER. OWNER PROVIDED CONTRACTOR INSTALLED
7. PAPER TOWEL DISPENSER, WALL MOUNTED. DIPLOMAT 2A10, BY BRADLEY OR APPROVED EQUAL
8. PAPER TOWEL DISPENSER, WALL MOUNTED. DIPLOMAT 2A10, BY BRADLEY OR APPROVED EQUAL
9. STANDARD LOCKER, BY BRADLEY OR APPROVED EQUAL
10. LENOX LOCKER PEDESTAL BENCH, BY BRADLEY OR APPROVED EQUAL
11. WASTE RECEPTACLE, SURFACE MOUNTED. MODEL 344, BY BRADLEY OR APPROVED EQUAL
12. 24" X 48" LENOX LOCKER PEDESTAL BENCH, BY BRADLEY OR APPROVED EQUAL
13. INDIVIDUAL FLUSH MOUNTED WALL SHOWER. MODEL WS-1F, BY BRADLEY OR APPROVED EQUAL
14. 4" CHANNEL DRAIN. SEE PLUMBING DRAWINGS FOR ADDITIONAL INFORMATION
15. BABY CHANGING STATION, WALL MOUNTED. MODEL 962, BY BRADLEY OR APPROVED EQUAL WITH OPERABLE PARTS AT 48" MAX ABOVE FINISH FLOOR
16. ALTERNATE ROLL-IN TYPE SHOWER COMPARTMENT. SEE 1/A5.06 FOR ADDITIONAL INFORMATION REAGRDING CLEARANCES AND MOUNTING HIGHTS FOR ACCESSIBLE COMPONENTS
17. L-SHAPED SHOWER SEAT. SEE 7/A.09 FOR ADDITIONAL INFORMATION
18. HI-LO DRINKING FOUNTAIN. SEE 9/A8.09 FOR ADDITIONAL INFORMATION
19. FLOOR DRAIN. SEE PLUMBING DRAWINGS FOR ADDITIONAL INFORMATION
20. CONCRETE BLOCK COLUMN PRECISION VERTICAL SCORE BY ORCO OR APPROVED EQUAL. SEE STRUCTURAL DWGS FOR ADDITIONAL INFORMATION
21. ACCESSIBLE LOCKER, BY BRADLEY OR APPROVAED EQUAL
22. GLASS BLOCK. SEE 14/A8.02 FOR ADDITIONAL INFORMATION
23. 6'-6" H. TUBE STEEL FENCE. SEE 1/A1.08 FOR ADDITIONAL INFORMATION
24. 16" X 16" CONCRETE PILASTER. SEE 8/A1.09 AND STRUCTURAL DRAWINGS FOR ADDITIONAL INFORMATION
25. 6" CONCRETE DECK OVER 6" THICK LAYER OF COMPACTED AGGREGATE BASE. SEE POOL DRAWINGS FOR ADDITIONAL INFORMATION

ENLARGED FLOOR PLAN

SCALE: 1/4" = 1'-0"

1 / A5.02A6

N

AGENCY

FLEWELLING & MOODY
architecture planning interiors

HEADQUARTERS OFFICE:
99 S. Lake Avenue, Suite 300
Pasadena, CA 91101
Phone: 323.543.8300
E-Mail: fm-pasadena@flewelling-moody.com

ANTELOPE VALLEY OFFICE:
1035 West Lancaster Boulvard
Lancaster, California 93534
Phone: 661.949.0771
E-Mail: fm-lancaster@flewelling-moody.com

An Employee Owned Corporation

ARCHITECT

LICENSED ARCHITECT — MATT T. GABBERT — C-14211 — 08/31/2025 — STATE OF CALIFORNIA

CONSULTANT

Drawn by: Author
Check by: Checker
Revisions

No.	Date	Description
1	08/27/2025	BID ALTERNATE

All dimensions must be checked at the job by the contractor who accepts full responsibility for their accuracy under the contract. These plans & the specifications in connection therewith have been prepared for a specific site. Any and all responsibility for their use in whole or in part on any other site is hereby disclaimed by Flewelling & Moody.

CITY OF RIDGECREST

SGT. JOHN PINNEY MEMORIAL POOL REPLACEMENT PROJECT

205 S WARNER ST, RIDGECREST, CA 93555

Drawing Title

ENLARGED FLOOR PLAN ALT 6

Job No. 3055-0100

Sheet No. **A5.02A6**

Date 12/20/2024

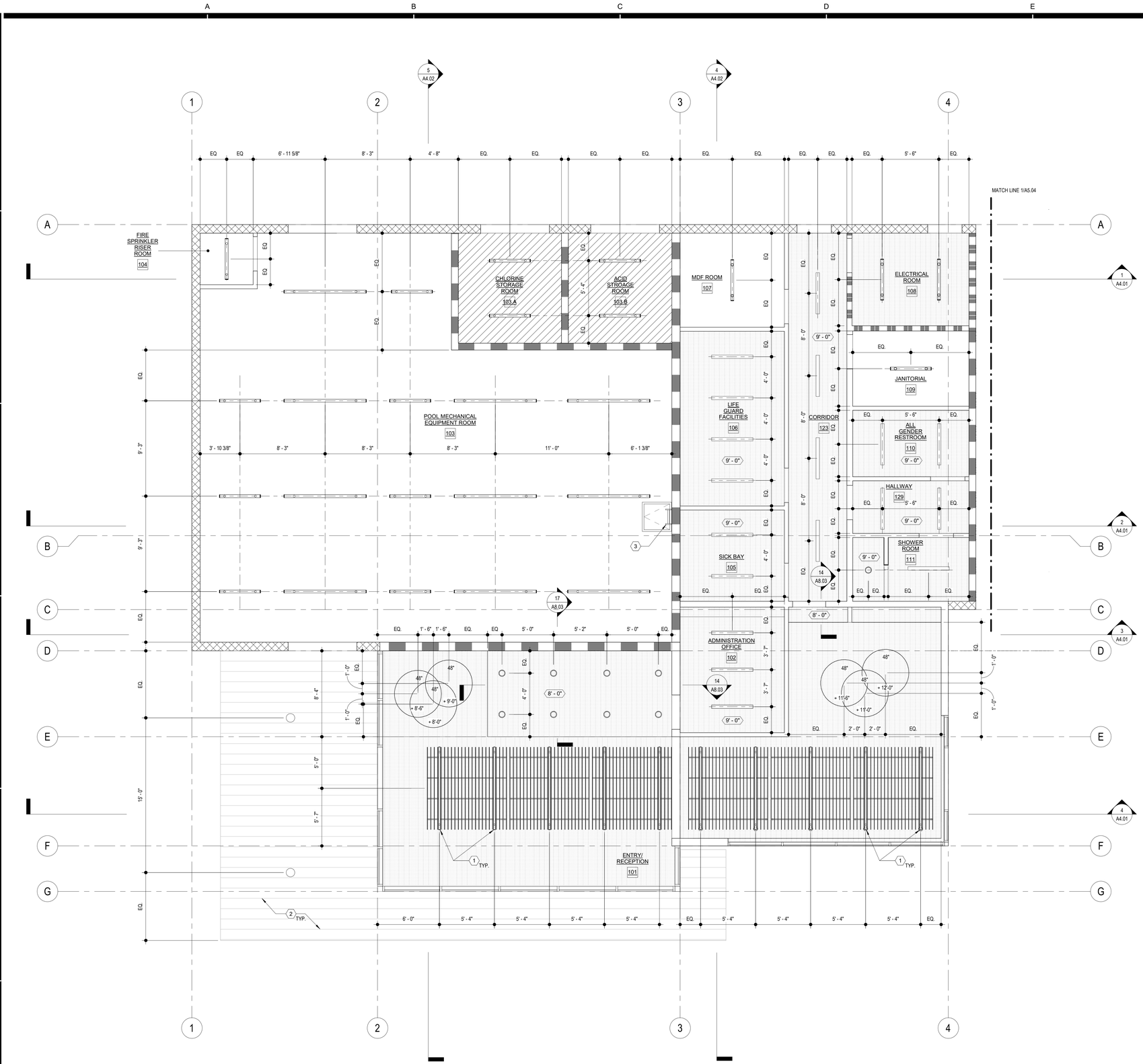

ENLARGED REFLECTED CEILING PLAN

SCALE: 1/4" = 1'-0"

1 / A5.03

GENERAL NOTES

1. REFER TO STRUCTURAL, MECHANICAL, PLUMBING, AND ELECTRICAL DRAWINGS FOR ADDITIONAL APPLICABLE SCOPE OF WORK.

2. CONTRACTOR SHALL VERIFY ALL CONDITIONS PRIOR TO CONSTRUCTION. ALL DISCREPANCIES SHALL BE BROUGHT TO THE ATTENTION OF OWNER AND ARCHITECT PRIOR TO COMMENCING WORK.

LEGEND

- 2 HR. FIRE RATED WALL
- 1 HR. FIRE RATED WALL
- WOOD STUD WALL
- CMU WALL
- 5/8" THK. TYPE 'X' GYPSUM BOARD CEILING FINISH
- EXPOSED STRUCTURE CEILING
- 2 HR FIRE RATED CEILING. SEE 17/A8.01 FOR ADDITIONAL INFORMATION
- 0'-0" — INDICATES CEILING HEIGHT ABOVE FINISH FLOOR
- RECESSED LED LINEAR LIGHT FIXTURE. SEE ELECTRICAL DRAWINGS FOR ADDITIONAL INFORMATION
- SUSPENDED LED LINEAR LIGHT FIXTURE. SEE ELECTRICAL DRAWINGS FOR ADDITIONAL INFORMAITON
- RECESSED LED ROUND LIGHT FIXTURE. SEE ELECTRICAL DRAWINGS FOR ADDITIONAL INFORMATION
- 48" — *INDICATES FIXTURE SIZE*; +10'-0" — *INDICATES FIXTURE HEIGHT ABOVE FINISH FLOOR*: SUSPENDED LED ROUND LIGHT FIXTURE. SEE ELECTRICAL DRAWINGS FOR ADDITIONAL INFORMATION
- SUSPENDED "FELTWORKS BLADES ACOUSTICAL FELT PANELS" BY ARMSTRONG OR APPROVED EQUAL 9-11" A.F.F.

CONSTRUCTION KEY NOTES

1. LINEAR PENDANT LIGHT STRIP HUNG FLUSH BETWEEN SUSPENDED "FELTWORKS BLADES ACOUSTICAL FELT PANELS"
2. R-MER PERFORATED SOFFIT ALUMINUM PANLES BY GARLAND OR APPROVED EQUAL
3. ROOF ACCESS LADDER. SEE A8.04 FOR ADDITIONAL INFORMATION

AGENCY

REVIEWED FOR CODE COMPLIANCE BY: WILLDAN ENGINEERING

Approval of these plans & specifications shall not be construed to be a permit for, or an approval of any violation of any Federal, State, County or City laws or ordinances. One set of approved plans must be kept on the job until completion.

9:24:12 AM Jul 21, 2025

FLEWELLING & MOODY
architecture planning interiors

HEADQUARTERS OFFICE:
99 S. Lake Avenue, Suite 300
Pasadena, CA 91101
Phone: 323.543.8300
E-Mail: fm-pasadena@flewelling-moody.com

ANTELOPE VALLEY OFFICE:
1035 West Lancaster Bouldvard
Lancaster, California 93534
Phone: 661.949.0771
E-Mail: fm-lancaster@flewelling-moody.com

An Employee Owned Corporation

ARCHITECT

LICENSED ARCHITECT — MATT T. GABBERT — C-14211 — 06/30/2026 — STATE OF CALIFORNIA

CONSULTANT

Drawn by: Author

Check by: Checker

Revisions

No.	Date	Description

All dimensions must be checked at the job by the contractor who accepts full responsibility for their accuracy under the contract. These plans & the specifications in connection therewith have been prepared for a specific site. Any and all responsibility for their use in whole or in part on any other site is hereby disclaimed by Flewelling & Moody.

CITY OF RIDGECREST

SGT. JOHN PINNEY MEMORIAL POOL REPLACEMENT PROJECT

205 S WARNER ST, RIDGECREST, CA 93555

Drawing Title

ENLARGED REFLECTED CEILING PLAN

Job No. 3055-0100

Sheet No. **A5.03**

Date 07/14/2025

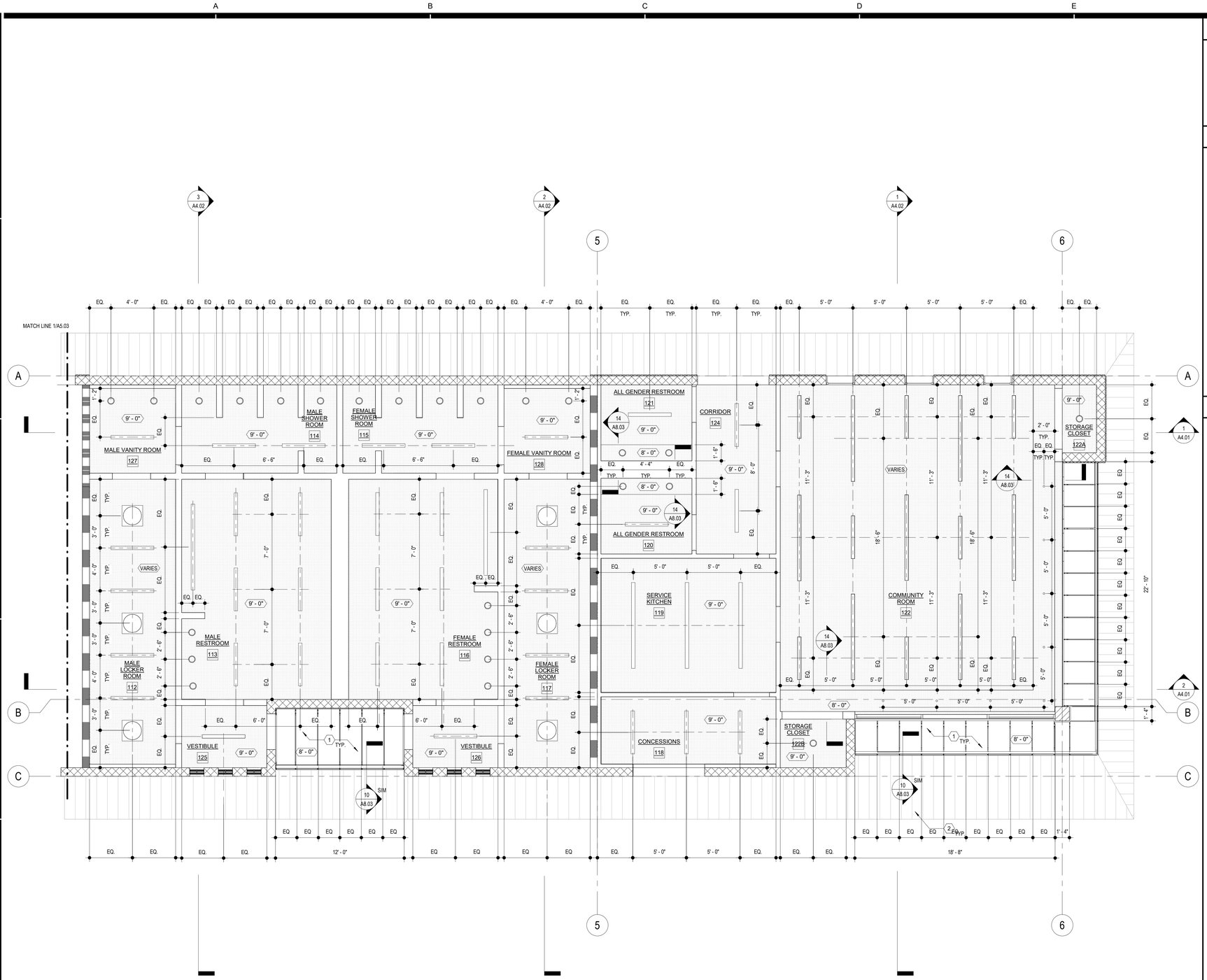

ENLARGED REFLECTED CEILING PLAN 2

SCALE: 1/4" = 1'-0"

1 A5.04

N

GENERAL NOTES

1. REFER TO STRUCTURAL, MECHANICAL, PLUMBING, ELECTRICAL, AND FIRE ALARM DRAWINGS FOR ADDITIONAL APPLICABLE SCOPE OF WORK.

2. CONTRACTOR SHALL VERIFY ALL CONDITIONS PRIOR TO CONSTRUCTION. ALL DISCREPANCIES SHALL BE BROUGHT TO THE ATTENTION OF OWNER AND ARCHITECT PRIOR TO COMMENCING WORK.

LEGEND

- 2 HR. FIRE RATED WALL
- 1 HR. FIRE RATED WALL
- WOOD STUD WALL
- CMU WALL
- 5/8" THK. TYPE 'X' GYPSUM CEILING FINISH
- 0'-0" — INDICATES CEILING HEIGHT ABOVE FINISH FLOOR
- RECESSED LED LINEAR LIGHT FIXTURE. SEE ELECTRICAL DRAWINGS FOR ADDITIONAL INFORMATION
- SUSPENDED LED LINEAR LIGHT FIXTURE. SEE ELECTRICAL DRAWINGS FOR ADDITIONAL INFORMAITON
- RECESSED LED ROUND LIGHT FIXTURE. SEE ELECTRICAL DRAWINGS FOR ADDITIONAL INFORMATION
- SOLATUBE.

CONSTRUCTION KEY NOTES

1. ELEMENT ALUMINUM PANLES BY IMETCO. SEE 7/A8.03 FOR ADDITIONAL INFORMATION
2. R-MER SOFFIT ALUMINUM PANLES BY GARLAND

AGENCY

REVIEWED FOR CODE COMPLIANCE BY: WILLDAN ENGINEERING

Approval of these plans & specifications shall not be construed to be a permit for, or an approval of any violation of any Federal, State, County or City laws or ordinances. One set of approved plans must be kept on the job until completion.

9:24:14 AM Jul 21, 2025

FLEWELLING & MOODY
architecture planning interiors

HEADQUARTERS OFFICE:
99 S. Lake Avenue, Suite 300
Pasadena, CA 91101
Phone: 323.543.8300
E-Mail: fm-pasadena@flewelling-moody.com

ANTELOPE VALLEY OFFICE:
1035 West Lancaster Boulevard
Lancaster, California 93534
Phone: 661.949.0771
E-Mail: fm-lancaster@flewelling-moody.com

An Employee Owned Corporation

ARCHITECT

LICENSED ARCHITECT — MATT T. GABBERT — C-14211 — STATE OF CALIFORNIA — 06/30/2025

CONSULTANT

Drawn by: Author

Check by: Checker

Revisions

No.	Date	Description

All dimensions must be checked at the job by the contractor who accepts full responsibility for their accuracy under the contract. These plans & the specifications in connection therewith have been prepared for a specific site. Any and all responsibility for their use in whole or in part on any other site is hereby disclaimed by Flewelling & Moody.

CITY OF RIDGECREST

SGT. JOHN PINNEY MEMORIAL POOL REPLACEMENT PROJECT

205 S WARNER ST, RIDGECREST, CA 93555

Drawing Title

ENLARGED REFLECTED CEILING PLAN

Job No. 3055-0100

Sheet No. **A5.04**

Date 07/14/2025

ENLARGED REFLECTED CEILING PLAN

SCALE: 1/4" = 1'-0"

1 / A5.04A6

N

GENERAL NOTES

1. REFER TO STRUCTURAL, MECHANICAL, PLUMBING, ELECTRICAL, AND FIRE ALARM DRAWINGS FOR ADDITIONAL APPLICABLE SCOPE OF WORK.

2. CONTRACTOR SHALL VERIFY ALL CONDITIONS PRIOR TO CONSTRUCTION. ALL DISCREPANCIES SHALL BE BROUGHT TO THE ATTENTION OF OWNER AND ARCHITECT PRIOR TO COMMENCING WORK.

LEGEND

- 2 HR. FIRE RATED WALL
- 1 HR. FIRE RATED WALL
- WOOD STUD WALL
- CMU WALL
- 5/8" THK. TYPE 'X' GYPSUM CEILING FINISH
- 0'-0" — INDICATES CEILING HEIGHT ABOVE FINISH FLOOR
- RECESSED LED LINEAR LIGHT FIXTURE. SEE ELECTRICAL DRAWINGS FOR ADDITIONAL INFORMATION
- SUSPENDED LED LINEAR LIGHT FIXTURE. SEE ELECTRICAL DRAWINGS FOR ADDITIONAL INFORMAITON
- RECESSED LED ROUND LIGHT FIXTURE. SEE ELECTRICAL DRAWINGS FOR ADDITIONAL INFORMATION
- SOLATUBE.

CONSTRUCTION KEY NOTES

1. ELEMENT ALUMINUM PANLES BY IMETCO. SEE 7/A8.03 FOR ADDITIONAL INFORMATION
2. R-MER SOFFIT ALUMINUM PANLES BY GARLAND

AGENCY

FLEWELLING & MOODY
architecture planning interiors

HEADQUARTERS OFFICE:
99 S. Lake Avenue, Suite 300
Pasadena, CA 91101
Phone: 323.543.8300
E-Mail: fm-pasadena@flewelling-moody.com

ANTELOPE VALLEY OFFICE:
1035 West Lancaster Bouldvard
Lancaster, California 93534
Phone: 661.949.0771
E-Mail: fm-lancaster@flewelling-moody.com

An Employee Owned Corporation

ARCHITECT

LICENSED ARCHITECT — MATT T. GABBERT — C-14211 — 08/31/2025 — STATE OF CALIFORNIA

CONSULTANT

Drawn by: Author

Check by: Checker

Revisions

No.	Date	Description
1	08/27/2025	BID ALTERNATE

All dimensions must be checked at the job by the contractor who accepts full responsibility for their accuracy under the contract. These plans & the specifications in connection therewith have been prepared for a specific site. Any and all responsibility for their use in whole or in part on any other site is hereby disclaimed by Flewelling & Moody.

CITY OF RIDGECREST

SGT. JOHN PINNEY MEMORIAL POOL REPLACEMENT PROJECT

205 S WARNER ST, RIDGECREST, CA 93555

Drawing Title

ENLARGED REFLECTED CEILING PLAN ALT 6

Job No. 3055-0100

Sheet No. **A5.04A6**

Date 12/20/2024

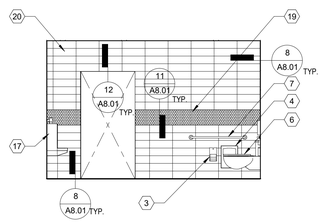

113 - MALE RESTROOM WEST ELEVATION

SCALE: 1/4" = 1'-0"

16 A5.05

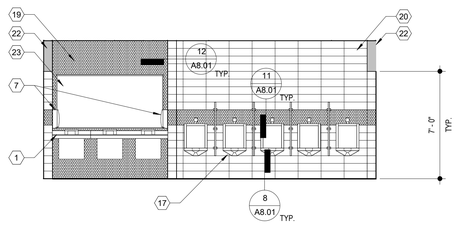

113 - MALE RESTROOM SOUTH ELEVATION

SCALE: 1/4" = 1'-0"

12 A5.05

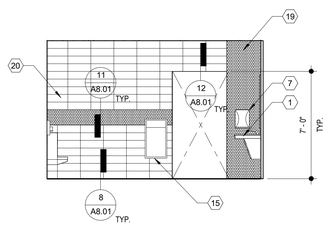

113 - MALE RESTROOM EAST ELEVATION

SCALE: 1/4" = 1'-0"

8 A5.05

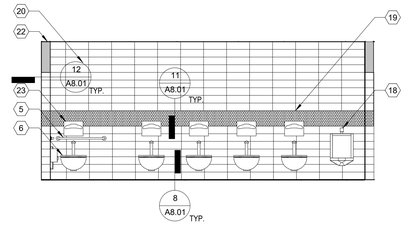

113 - MALE RESTROOM NORTH ELEVATION

SCALE: 1/4" = 1'-0"

4 A5.05

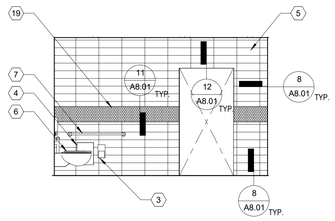

116 - FEMALE RESTROOM WEST ELEVATION

SCALE: 1/4" = 1'-0"

15 A5.05

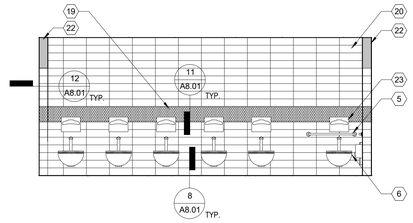

116 - FEMALE RESTROOM SOUTH ELEVATION

SCALE: 1/4" = 1'-0"

11 A5.05

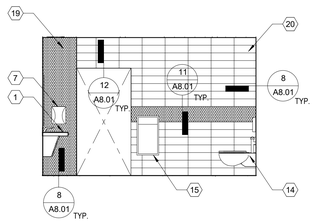

116 - FEMALE RESTROOM EAST ELEVATION

SCALE: 1/4" = 1'-0"

7 A5.05

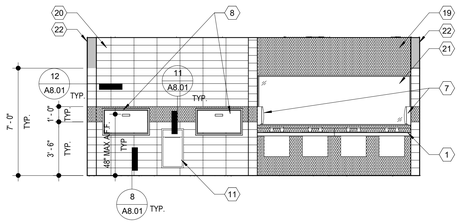

116 - FEMALE RESTROOM NORTH ELEVATION

SCALE: 1/4" = 1'-0"

3 A5.05

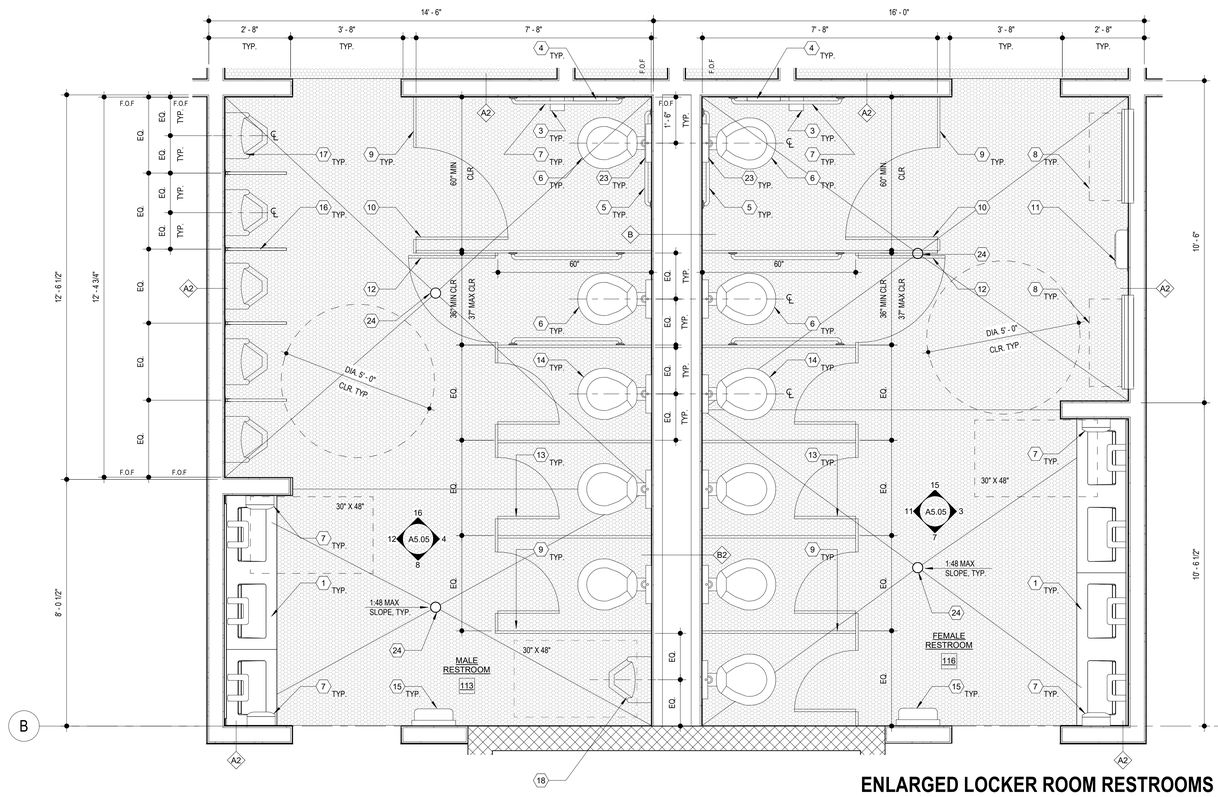

ENLARGED LOCKER ROOM RESTROOMS FLOOR PLAN

SCALE: 1/2" = 1'-0"

1 A5.05

GENERAL NOTES

1. REFER TO STRUCTURAL, MECHANICAL, PLUMBING, AND ELECTRICCAL FOR ADDITIONAL APPLICABLE SCOPE OF WORK.

2. CONTRACTOR SHALL VERIFY ALL CONDITIONS PRIOR TO CONSTRUCTION. IF THERE ARE ANY CONFLICTS BETWEEN THESE DOCUMENTS OR BETWEEN THESE DOCUMENTS AND THAT OF OTHER DESIGN TEAM CONSULTANTS, PLEASE NOTIFY THE ARCHITECT IN WRITING, IDENTIFYING THE AREAS IN QUESTION PRIOR TO INSTALLATION OR CONSTRUCTION.

3. DO NOT SCALE THE DRAWINGS. ONLY WRITTEN DIMENSIONS SHALL BE USED. UNLESS OTHERWISE NOTED, THE FOLLOWING DIMENSIONING CRITERIA SHALL BE USED:
   A. FOR GYPSUM BOARD (GWB) AND METAL/WOOD STUD WALL CONSTRUCTION, ALL DIMENSIONS ARE SHOWN TO THE FACE OF STUD. REFER TO THE RESTROOM DRAWINGS FINISH ASSEMBLIES APPLIED TO THE FACE OF GWB ASSEMBLIES.
   B. REFER TO SPECIFIC PARTITION TYPE ON PROJECT PARTITION SCHEDULE FOR DIMESIONS AND FOR ALL UL ASSEMBLY NUMBERS.
   C. DOOR FRAME HINGES ARE LOCATED 4" NOMINALLY OFF THE ADJACENT PERPENDICULAR WALL UNLESS OTHERWISE NOTED. ALL FINAL DOOR LOCATIONS SHALL BE CONFIRMED WITH ARCHITECT.
   D. DIMENSION STRINGS LISTED WITH A +/- INDICATING THAT THESE DIMENSIONS ARE TO BE WITHIN TOLERANCE WHILE DIMENSIONS OF OTHER ITEMS WITHOUT +/- SHALL BE HELD.

4. CONTRACTOR SHALL BE RESPONSIBLE FOR REVIEWING ALL PARTITIONING TAGS AND COORDINATING FINISH REQUIREMENTS, HOLLOW METAL AND WOOD FRAMES, ETC.

5. REFER TO SITE PLAN FOR LOCATION OF COORDINDATES ORIGIN POINT (X:0, Y:0).

6. SEE A8.06 FOR ADDITIONAL INFORMATION REGARDING REQUIRMENTS FOR ACCESSIBLE RESTROOM AND SHOWER COMPONENTS.

LEGEND

- WOOD STUD WALL
- CMU WALL
- QUARRY TILE FLOORING. VERIFY DEPTH OF SLAB DEPRESSION PER MANUFACTURER RECOMMENDATION AS REQUIRED. SEE STRUCTURAL DWGS FOR ADDITIONAL INFORMATION
- CERAMIC TILE FLOORING. VERIFY DEPTH OF SLAB DEPRESSION PER MANUFACTURER RECOMMENDATION AS REQUIRED. SEE STRUCTURAL DWGS FOR ADDITIONAL INFORMATION
- A1 WALL TAG. SEE A8.01 FOR ADDITIONAL INFORMATION

CONSTRUCTION KEY NOTES

1. SINK, OMNIDECK W/ WASHBAR 1, BY BRADLEY OR APPROVED EQUAL
2. 42" LONG GRAB BAR. 832 SERIES, BY BRADLEY OR APPROVED EQUAL
3. TOILET PAPER DISPENSER , WALL MOUNTED. MODEL 5402, BY BRADLEY OR APPROVED EQUAL
4. SANITARY NAPKIN DISPOSAL, SEMI-RECESSED. MODEL 4737, BY BRADLEY OR APPROVED EQUAL
5. 36" LONG GRAB BAR. 832 SERIES, BY BRADLEY OR APPROVED EQUAL
6. ACCESSIBLE TOILET, WALL MOUNTED. SEE PLUMBING DRAWINGS FOR ADDITIONAL INFORMATION
7. PAPER TOWEL DISPENSER, WALL MOUNTED. DIPLOMAT 2A10, BY BRADLEY OR APPROVED EQUAL
8. BABY CHANGING STATION, RECESSED. MODEL 962, BY BRADLEY WITH OPERABLE PARTS AT 48" MAX ABOVE FINISH FLOOR
9. FLOOR MOUNTED, WALL BRACED TOILET PARTITION
10. 36" WIDE SELF-CLOSING ACCESSIBLE STALL DOOR TO MATCH TOILET PARTITION
11. WASTE RECEPTACLE, SEMI-RECESSED. MODEL 344 W/ HINGED COVER, BY BRADLEY OR APPROVED EQUAL
12. 34" WIDE STALL DOOR TO MATCH TOILET PARTITION
13. STANDARD STALL DOOR TO MATCH TOILET PARTITION
14. TOILET, WALL MOUNTED. SEE PLUMBING DRAWINGS FOR ADDITIONAL INFORMATION
15. WASTE RECEPTACLE, SEMI-RECESSED. MODEL 344, BY BRADLEY OR APPROVED EQUAL
16. 24" W X 48" H WALL MOUNTED URINAL PRIVACY SCREEN TO MATCH TOILET PARTITION
17. URINAL, WALL MOUNTED. SEE PLUMBING DRAWINGS FOR ADDITIONAL INFORMATION
18. ACCESSIBLE URINAL, WALL MOUNTED SEE PLUMBING DRAWINGS FOR ADDITIONAL INFORMATION
19. HEXAGON TILE WALL FINISH
20. 6X18 TILE WALL FINISH
21. MIRROR, SURFACE MOUNTED
22. WALL SECTION AT OPENING SHOWN SCREENED
23. TOILET SEAT COVER DISPENSER, SURFACE MOUNTED. MODEL 583, BY BRADLEY OR APPROVED EQUAL
24. FLOOR DRAIN. SEE PLUMBING DRAWINGS FOR ADDITIONAL INFORMATION

AGENCY

REVIEWED FOR CODE COMPLIANCE BY: WILLDAN ENGINEERING

Approval of these plans & specifications shall not be construed to be a permit for, or an approval of any violation of any Federal, State, County or City laws or ordinances. One set of approved plans must be kept on the job until completion.

9:24:15 AM Jul 21, 2025

FLEWELLING & MOODY
architecture planning interiors

HEADQUARTERS OFFICE:
99 S. Lake Avenue, Suite 300
Pasadena, CA 91101
Phone: 323.543.8300
E-Mail: fm-pasadena@flewelling-moody.com

ANTELOPE VALLEY OFFICE:
1035 West Lancaster Boulevard
Lancaster, California 93534
Phone: 661.949.0771
E-Mail: fm-lancaster@flewelling-moody.com

An Employee Owned Corporation

ARCHITECT

LICENSED ARCHITECT — MATTHEW T. GABBERT — C-14211 — 06/30/2025 — STATE OF CALIFORNIA

CONSULTANT

Drawn by: Author

Check by: Checker

Revisions

No.	Date	Description

All dimensions must be checked at the job by the contractor who accepts full responsibility for their accuracy under the contract. These plans & the specifications in connection therewith have been prepared for a specific site. Any and all responsibility for their use in whole or in part on any other site is hereby disclaimed by Flewelling & Moody.

CITY OF RIDGECREST

SGT. JOHN PINNEY MEMORIAL POOL REPLACEMENT PROJECT

205 S WARNER ST, RIDGECREST, CA 93555

Drawing Title

ENLARGED RESTROOM FLOOR PLANS AND ELEVATIONS

Job No. 3055-0100

Sheet No. **A5.05**

Date 07/14/2025

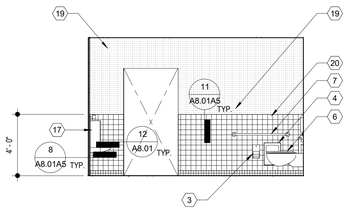

113 - MALE RESTROOM WEST ELEVATION

SCALE: 1/4" = 1'-0"

16 A5.05A5

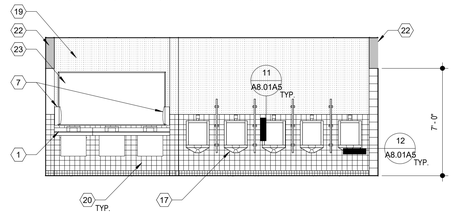

113 - MALE RESTROOM SOUTH ELEVATION

SCALE: 1/4" = 1'-0"

12 A5.05A5

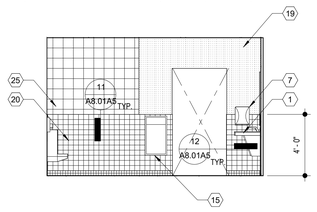

113 - MALE RESTROOM EAST ELEVATION

SCALE: 1/4" = 1'-0"

8 A5.05A5

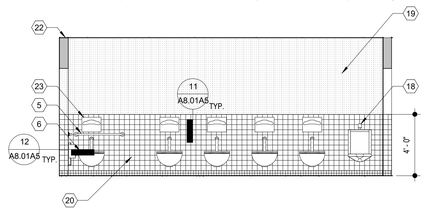

113 - MALE RESTROOM NORTH ELEVATION

SCALE: 1/4" = 1'-0"

4 A5.05A5

116 - FEMALE RESTROOM WEST ELEVATION

SCALE: 1/4" = 1'-0"

15 A5.05A5

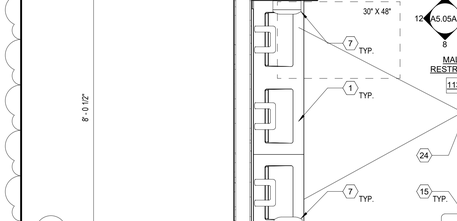

116 - FEMALE RESTROOM SOUTH ELEVATION

SCALE: 1/4" = 1'-0"

11 A5.05A5

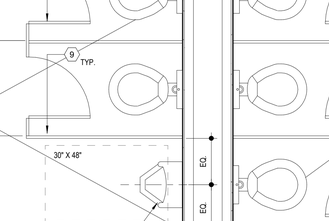

116 - FEMALE RESTROOM EAST ELEVATION

SCALE: 1/4" = 1'-0"

7 A5.05A5

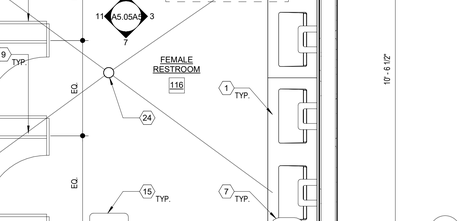

116 - FEMALE RESTROOM NORTH ELEVATION

SCALE: 1/4" = 1'-0"

3 A5.05A5

ENLARGED LOCKER ROOM RESTROOMS FLOOR PLAN

SCALE: 1/2" = 1'-0"

1 A5.05A5

GENERAL NOTES

1. REFER TO STRUCTURAL, MECHANICAL, PLUMBING, AND ELECTRICCAL FOR ADDITIONAL APPLICABLE SCOPE OF WORK.

2. CONTRACTOR SHALL VERIFY ALL CONDITIONS PRIOR TO CONSTRUCTION. IF THERE ARE ANY CONFLICTS BETWEEN THESE DOCUMENTS OR BETWEEN THESE DOCUMENTS AND THAT OF OTHER DESIGN TEAM CONSULTANTS, PLEASE NOTIFY THE ARCHITECT IN WRITING, IDENTIFYING THE AREAS IN QUESTION PRIOR TO INSTALLATION OR CONSTRUCTION.

3. DO NOT SCALE THE DRAWINGS. ONLY WRITTEN DIMENSIONS SHALL BE USED. UNLESS OTHERWISE NOTED, THE FOLLOWING DIMENSIONING CRITERIA SHALL BE USED:
   A. FOR GYPSUM BOARD (GWB) AND METAL/WOOD STUD WALL CONSTRUCTION, ALL DIMENSIONS ARE SHOWN TO THE FACE OF STUD. REFER TO THE RESTROOM DRAWINGS FINISH ASSEMBLIES APPLIED TO THE FACE OF GWB ASSEMBLIES.
   B. REFER TO SPECIFIC PARTITION TYPE ON PROJECT PARTITION SCHEDULE FOR DIMESIONS AND FOR ALL UL ASSEMBLY NUMBERS.
   C. DOOR FRAME HINGES ARE LOCATED 4" NOMINALLY OFF THE ADJACENT PERPENDICULAR WALL UNLESS OTHERWISE NOTED. ALL FINAL DOOR LOCATIONS SHALL BE CONFIRMED WITH ARCHITECT.
   D. DIMENSION STRINGS LISTED WITH A +/- INDICATING THAT THESE DIMENSIONS ARE TO BE WITHIN TOLERANCE WHILE DIMENSIONS OF OTHER ITEMS WITHOUT +/- SHALL BE HELD.

4. CONTRACTOR SHALL BE RESPONSIBLE FOR REVIEWING ALL PARTITIONING TAGS AND COORDINATING FINISH REQUIREMENTS, HOLLOW METAL AND WOOD FRAMES, ETC.

5. REFER TO SITE PLAN FOR LOCATION OF COORDINDATES ORIGIN POINT (X:0, Y:0).

6. SEE A8.06 FOR ADDITIONAL INFORMATION REGARDING REQUIRMENTS FOR ACCESSIBLE RESTROOM AND SHOWER COMPONENTS.

LEGEND

WOOD STUD WALL

CMU WALL 1

CONSTRUCTION KEY NOTES

1. SINK, OMNIDECK W/ WASHBAR 1, BY BRADLEY
2. 42" LONG GRAB BAR. 832 SERIES, BY BRADLEY
3. TOILET PAPER DISPENSER , WALL MOUNTED. MODEL 5402, BY BRADLEY
4. SANITARY NAPKIN DISPOSAL, SEMI-RECESSED. MODEL 4737, BY BRADLEY
5. 36" LONG GRAB BAR. 832 SERIES, BY BRADLEY
6. ACCESSIBLE TOILET, WALL MOUNTED. SEE PLUMBING DRAWINGS FOR ADDITIONAL INFORMATION
7. PAPER TOWEL DISPENSER, WALL MOUNTED. DIPLOMAT 2A10, BY BRADLEY
8. BABY CHANGING STATION, RECESSED. MODEL 962, BY BRADLEY WITH OPERABLE PARTS AT 48" MAX ABOVE FINISH FLOOR
9. FLOOR MOUNTED, WALL BRACED TOILET PARTITION
10. 36" WIDE SELF-CLOSING ACCESSIBLE STALL DOOR TO MATCH TOILET PARTITION
11. WASTE RECEPTACLE, SEMI-RECESSED. MODEL 344 W/ HINGED COVER, BY BRADLEY
12. 34" WIDE STALL DOOR TO MATCH TOILET PARTITION
13. STANDARD STALL DOOR TO MATCH TOILET PARTITION
14. TOILET, WALL MOUNTED. SEE PLUMBING DRAWINGS FOR ADDITIONAL INFORMATION
15. WASTE RECEPTACLE, SEMI-RECESSED. MODEL 344, BY BRADLEY
16. 24" W X 48" H WALL MOUNTED URINAL PRIVACY SCREEN TO MATCH TOILET PARTITION
17. URINAL, WALL MOUNTED. SEE PLUMBING DRAWINGS FOR ADDITIONAL INFORMATION
18. ACCESSIBLE URINAL, WALL MOUNTED SEE PLUMBING DRAWINGS FOR ADDITIONAL INFORMATION
19. 5/8" THK. TYPE 'X' GYPSUM BOARD, PAINTED 1
20. 4X4 TILE WALL FINISH
21. MIRROR, SURFACE MOUNTED
22. WALL SECTION AT OPENING SHOWN SCREENED
23. TOILET SEAT COVER DISPENSER, SURFACE MOUNTED. MODEL 583, BY BRADLEY
24. FLOOR DRAIN. SEE PLUMBING DRAWINGS FOR ADDITIONAL INFORMATION
25. CONCRETE BLOCK WALL PRECISION VERTICAL SCORE BY ORCO, PAINTED 1

1

AGENCY

FLEWELLING & MOODY
architecture planning interiors

HEADQUARTERS OFFICE:
99 S. Lake Avenue, Suite 300
Pasadena, CA 91101
Phone: 323.543.8300
E-Mail: fm-pasadena@flewelling-moody.com

ANTELOPE VALLEY OFFICE:
1035 West Lancaster Boulevard
Lancaster, California 93534
Phone: 661.949.0771
E-Mail: fm-lancaster@flewelling-moody.com

An Employee Owned Corporation

ARCHITECT



CONSULTANT

Drawn by: Author

Check by: Checker

Revisions

No.	Date	Description
1	08/27/2025	BID ALTERNATE

All dimensions must be checked at the job by the contractor who accepts full responsibility for their accuracy under the contract. These plans & the specifications in connection therewith have been prepared for a specific site. Any and all responsibility for their use in whole or in part on any other site is hereby disclaimed by Flewelling & Moody.

CITY OF RIDGECREST

SGT. JOHN PINNEY MEMORIAL POOL REPLACEMENT PROJECT

205 S WARNER ST, RIDGECREST, CA 93555

Drawing Title

ENLARGED RESTROOM FLOOR PLANS AND ELEVATIONS ALT 5

Job No. 3055-0100

Sheet No. **A5.05A5**

Date 12/20/2024

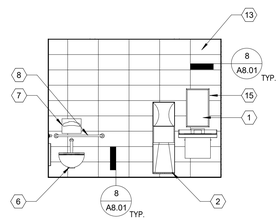

110 - ALL GENDER RESTROOM WEST ELEVATION

SCALE: 1/4" = 1'-0"

16 / A5.06

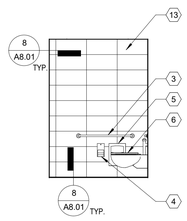

110 - ALL GENDER RESTROOM SOUTH ELEVATION

SCALE: 1/4" = 1'-0"

12 / A5.06

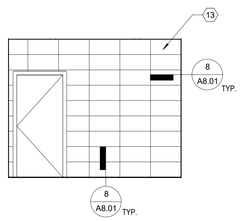

110 - ALL GENDER RESTROOM EAST ELEVATION

SCALE: 1/4" = 1'-0"

8 / A5.06

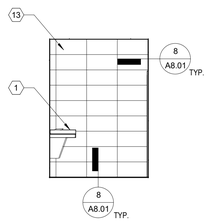

110 - ALL GENDER RESTROOM NORTH ELEVATION

SCALE: 1/4" = 1'-0"

4 / A5.06

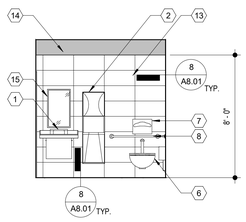

120 - ALL GENDER RESTROOM WEST ELEVATION

SCALE: 1/4" = 1'-0"

15 / A5.06

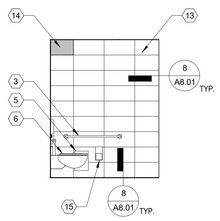

120 - ALL GENDER RESTROOM SOUTH ELEVATION

SCALE: 1/4" = 1'-0"

11 / A5.06

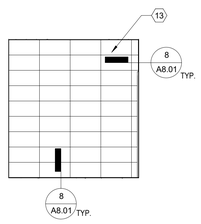

120 - ALL GENDER RESTROOM EAST ELEVATION

SCALE: 1/4" = 1'-0"

7 / A5.06

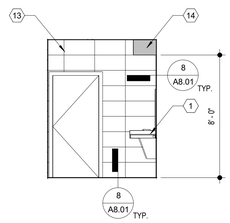

120 - ALL GENDER RESTROOM NORTH ELEVATION

SCALE: 1/4" = 1'-0"

3 / A5.06

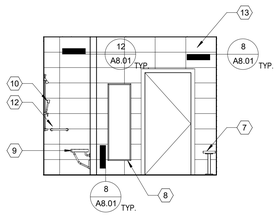

111 - SHOWER ROOM WEST ELEVATION

SCALE: 1/4" = 1'-0"

14 / A5.06

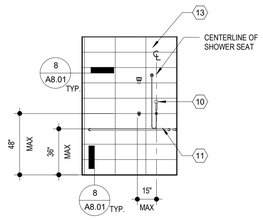

111 - SHOWER ROOM SOUTH ELEVATION

SCALE: 1/4" = 1'-0"

10 / A5.06

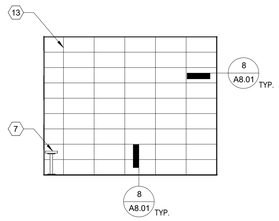

111 - SHOWER ROOM EAST ELEVATION

SCALE: 1/4" = 1'-0"

6 / A5.06

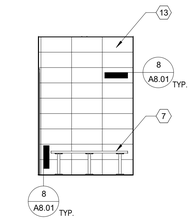

111 - SHOWER ROOM ELEVATION

SCALE: 1/4" = 1'-0"

2 / A5.06

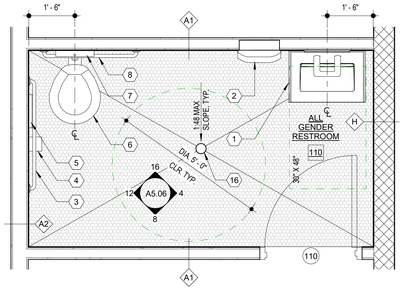

ENLARGED ALL GENDER RESTROOM 110 FLOOR PLAN

SCALE: 1/2" = 1'-0"

9 / A5.06

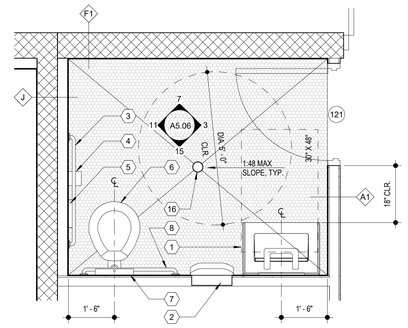

ENLARGED ALL GENDER RESTROOM 120 FLOOR PLAN 121 SIM

SCALE: 1/2" = 1'-0"

5 / A5.06

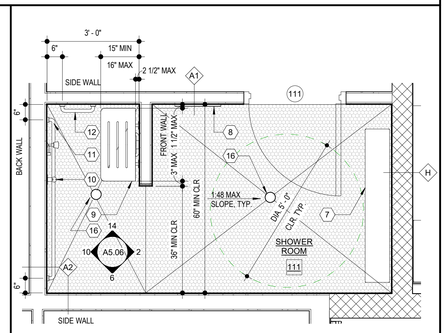

ALTERNATE ROLL-IN TYPE SHOWER COMPARTMENT FLOOR PLAN

SCALE: 1/2" = 1'-0"

1 / A5.06

GENERAL NOTES

1. REFER TO STRUCTURAL, MECHANICAL, PLUMBING, AND ELECTRICCAL FOR ADDITIONAL APPLICABLE SCOPE OF WORK.

2. CONTRACTOR SHALL VERIFY ALL CONDITIONS PRIOR TO CONSTRUCTION. IF THERE ARE ANY CONFLICTS BETWEEN THESE DOCUMENTS OR BETWEEN THESE DOCUMENTS AND THAT OF OTHER DESIGN TEAM CONSULTANTS, PLEASE NOTIFY THE ARCHITECT IN WRITING, IDENTIFYING THE AREAS IN QUESTION PRIOR TO INSTALLATION OR CONSTRUCTION.

3. DO NOT SCALE THE DRAWINGS. ONLY WRITTEN DIMENSIONS SHALL BE USED. UNLESS OTHERWISE NOTED, THE FOLLOWING DIMENSIONING CRITERIA SHALL BE USED:
   A. FOR GYPSUM BOARD (GWB) AND METAL/WOOD STUD WALL CONSTRUCTION, ALL DIMENSIONS ARE SHOWN TO THE FACE OF STUD. REFER TO THE RESTROOM DRAWINGS FINISH ASSEMBLIES APPLIED TO THE FACE OF GWB ASSEMBLIES.
   B. REFER TO SPECIFIC PARTITION TYPE ON PROJECT PARTITION SCHEDULE FOR DIMESIONS AND FOR ALL UL ASSEMBLY NUMBERS.
   C. DOOR FRAME HINGES ARE LOCATED 4" NOMINALLY OFF THE ADJACENT PERPENDICULAR WALL UNLESS OTHERWISE NOTED. ALL FINAL DOOR LOCATIONS SHALL BE CONFIRMED WITH ARCHITECT.
   D. DIMENSION STRINGS LISTED WITH A +/- INDICATING THAT THESE DIMSNIONS ARE TO BE WITHIN TOLERANCE WHILE DIMENSIONS OF OTHER ITEMS WITHOUT +/- SHALL BE HELD.

4. CONTRACTOR SHALL BE RESPONSIBLE FOR REVIEWING ALL PARTITIONING TAGS AND COORDINATING FINISH REQUIREMENTS, HOLLOW METAL AND WOOD FRAMES, ETC.

5. REFER TO SITE PLAN FOR LOCATION OF COORDINDATES ORIGIN POINT (X:0, Y:0).

6. SEE A8.06 FOR ADDITIONAL INFORMATION REGARDING REQUIRMENTS FOR ACCESSIBLE RESTROOM AND SHOWER COMPONENTS.

LEGEND

- WOOD STUD WALL
- CMU WALL
- (101) DOOR TYPE, SEE DOOR SCHEDULE ON SHEET A7.01
- TILE FLOORING. VERIFY DEPTH OF SLAB DEPRESSION PER MANUFACTURER RECOMMENDATION AS REQUIRED. SEE STRUCTURAL DWGS FOR ADDITIONAL INFORMATION
- CERAMIC TILE FLOORING. VERIFY DEPTH OF SLAB DEPRESSION PER MANUFACTURER RECOMMENDATION AS REQUIRED. SEE STRUCTURAL DWGS FOR ADDITIONAL INFORMATION
- <A1> WALL TAG. SEE A8.01 FOR ADDITIONAL INFORMATION

CONSTRUCTION KEY NOTES

1. SINK, OMNIDECK W/ WASHBAR 1, BY BRADLEY OR APPROVED EQUAL
2. PAPER TOWEL DISPENSER, SEMI-RECESSED. DIPLOMAT SERIES MODEL 2A05, BY BRADLEY OR APPROVED EQUAL
3. 42" LONG GRAB BAR. 832 SERIES, BY BRADLEY OR APPROVED EQUAL
4. TOILET PAPER DISPENSER , WALL MOUNTED. MODEL 5402, BY BRADLEY OR APPROVED EQUAL
5. SANITARY NAPKIN DISPOSAL, SEMI-RECESSED. MODEL 4737, BY BRADLEY OR APPROVED EQUAL
6. ACCESSIBLE TOILET, WALL MOUNTED. SEE PLUMBING DRAWINGS FOR ADDITIONAL INFORMATION
7. 9 1/2" X 60" LENOX LOCKER PEDESTAL BENCH, BY BRADLEY OR APPROVED EQUAL
8. SURFACE MOUNTED MIRROR
9. ACCESSIBLE SHOWER SEAT, WALL MOUNTED
10. ACCESSIBLE IN-WALL SHOWER. HN3000 SERIES, BY BRADLEY OR APPROVED EQUAL
11. BACK WALL SHOWER BAR MOUNTED AT 36" AFF
12. 12" LONG GRAB BAR MOUNTED AT 36" AFF
13. 12X24 TILE WALL FINISH
14. GYP. BOARD CEILING SOFFIT SHOWN SCREENED
15. 18" X 30" MIRROR, SURFACE MOUNTED. MODEL 780, BY BRADLEY OR APPROVED EQUAL
16. FLOOR DRAIN. SEE PLUMBING DRAWINGS FOR ADDITIONAL INFORMATION

AGENCY

REVIEWED FOR CODE COMPLIANCE BY: WILLDAN ENGINEERING

Approval of these plans & specifications shall not be construed to be a permit for, or an approval of any violation of any Federal, State, County or City laws or ordinances. One set of approved plans must be kept on the job until completion.

9:24:17 AM Jul 21, 2025

FLEWELLING & MOODY
architecture planning interiors

HEADQUARTERS OFFICE:
99 S. Lake Avenue, Suite 300
Pasadena, CA 91101
Phone: 323.543.8300
E-Mail: fm-pasadena@flewelling-moody.com

ANTELOPE VALLEY OFFICE:
1035 West Lancaster Boulevard
Lancaster, California 93534
Phone: 661.949.0771
E-Mail: fm-lancaster@flewelling-moody.com

An Employee Owned Corporation

ARCHITECT

LICENSED ARCHITECT — MATT T. GABBARD — C-14211 — 06/30/2026 — STATE OF CALIFORNIA

CONSULTANT

Drawn by: Author

Check by: Checker

Revisions

No.	Date	Description

All dimensions must be checked at the job by the contractor who accepts full responsibility for their accuracy under the contract. These plans & the specifications in connection therewith have been prepared for a specific site. Any and all responsibility for their use in whole or in part on any other site is hereby disclaimed by Flewelling & Moody.

CITY OF RIDGECREST

SGT. JOHN PINNEY MEMORIAL POOL REPLACEMENT PROJECT

205 S WARNER ST, RIDGECREST, CA 93555

Drawing Title

ENLARGED RESTROOM / SHOWERS FLOOR PLANS AND ELEVATIONS

Job No. 3055-0100

Sheet No. **A5.06**

Date 07/14/2025

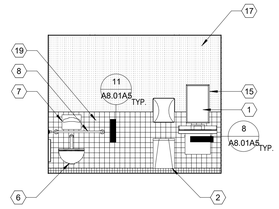

110 - ALL GENDER RESTROOM WEST ELEVATION

SCALE: 1/4" = 1'-0"

16 / A5.06A5

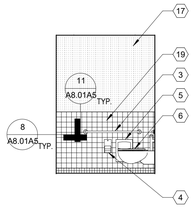

110 - ALL GENDER RESTROOM SOUTH ELEVATION

SCALE: 1/4" = 1'-0"

12 / A5.06A5

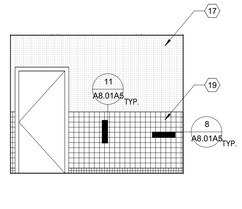

110 - ALL GENDER RESTROOM EAST ELEVATION

SCALE: 1/4" = 1'-0"

8 / A5.06A5

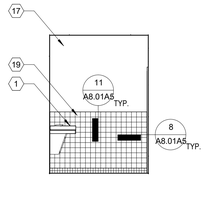

110 - ALL GENDER RESTROOM NORTH ELEVATION

SCALE: 1/4" = 1'-0"

4 / A5.06A5

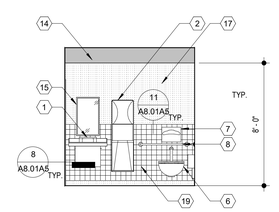

120 - ALL GENDER RESTROOM WEST ELEVATION

SCALE: 1/4" = 1'-0"

15 / A5.06A5

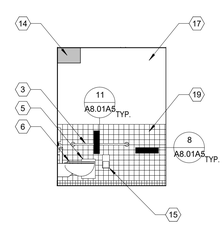

120 - ALL GENDER RESTROOM SOUTH ELEVATION

SCALE: 1/4" = 1'-0"

11 / A5.06A5

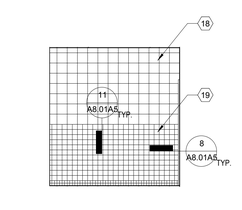

120 - ALL GENDER RESTROOM EAST ELEVATION

SCALE: 1/4" = 1'-0"

7 / A5.06A5

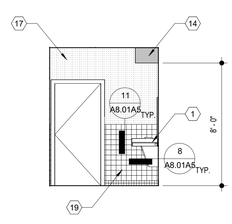

120 - ALL GENDER RESTROOM NORTH ELEVATION

SCALE: 1/4" = 1'-0"

3 / A5.06A5

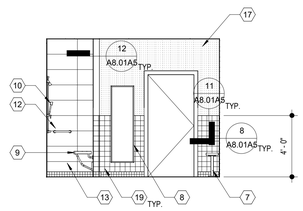

111 - SHOWER ROOM WEST ELEVATION

SCALE: 1/4" = 1'-0"

14 / A5.06A5

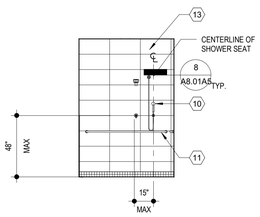

111 - SHOWER ROOM SOUTH ELEVATION

SCALE: 1/4" = 1'-0"

10 / A5.06A5

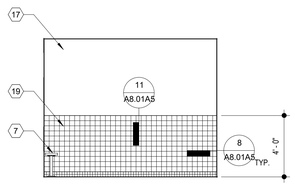

111 - SHOWER ROOM EAST ELEVATION

SCALE: 1/4" = 1'-0"

6 / A5.06A5

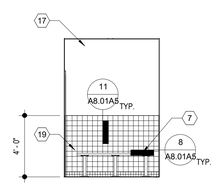

111 - SHOWER ROOM ELEVATION

SCALE: 1/4" = 1'-0"

2 / A5.06A5

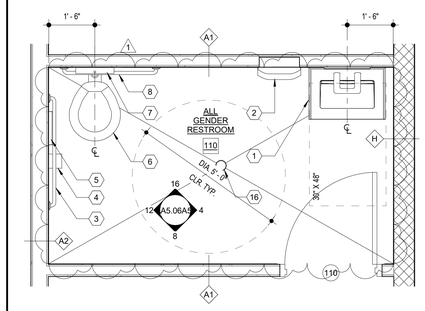

ENLARGED ALL GENDER RESTROOM 110 FLOOR PLAN

SCALE: 1/2" = 1'-0"

9 / A5.06A5

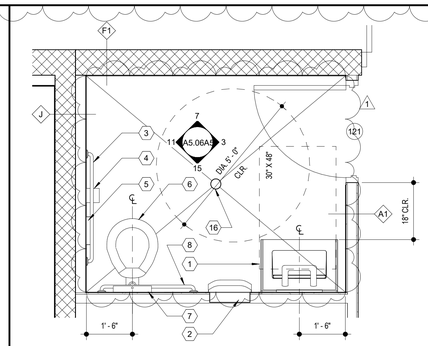

ENLARGED ALL GENDER RESTROOM 120 FLOOR PLAN 121 SIM

SCALE: 1/2" = 1'-0"

5 / A5.06A5

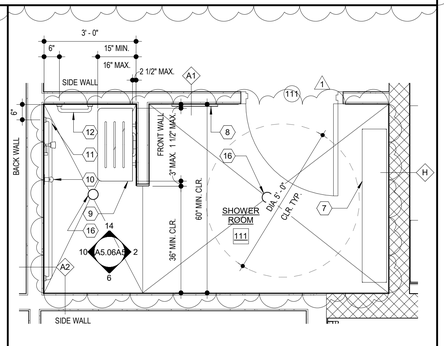

ALTERNATE ROLL-IN TYPE SHOWER COMPARTMENT FLOOR PLAN

SCALE: 1/2" = 1'-0"

1 / A5.06A5

GENERAL NOTES

1. REFER TO STRUCTURAL, MECHANICAL, PLUMBING, AND ELECTRICCAL FOR ADDITIONAL APPLICABLE SCOPE OF WORK.

2. CONTRACTOR SHALL VERIFY ALL CONDITIONS PRIOR TO CONSTRUCTION. IF THERE ARE ANY CONFLICTS BETWEEN THESE DOCUMENTS OR BETWEEN THESE DOCUMENTS AND THAT OF OTHER DESIGN TEAM CONSULTANTS, PLEASE NOTIFY THE ARCHITECT IN WRITING, IDENTIFYING THE AREAS IN QUESTION PRIOR TO INSTALLATION OR CONSTRUCTION.

3. DO NOT SCALE THE DRAWINGS. ONLY WRITTEN DIMENSIONS SHALL BE USED. UNLESS OTHERWISE NOTED, THE FOLLOWING DIMENSIONING CRITERIA SHALL BE USED:
   A. FOR GYPSUM BOARD (GWB) AND METAL/WOOD STUD WALL CONSTRUCTION, ALL DIMENSIONS ARE SHOWN TO THE FACE OF STUD. REFER TO THE RESTROOM DRAWINGS FINISH ASSEMBLIES APPLIED TO THE FACE OF GWB ASSEMBLIES.
   B. REFER TO SPECIFIC PARTITION TYPE ON PROJECT PARTITION SCHEDULE FOR DIMESIONS AND FOR ALL UL ASSEMBLY NUMBERS.
   C. DOOR FRAME HINGES ARE LOCATED 4" NOMINALLY OFF THE ADJACENT PERPENDICULAR WALL UNLESS OTHERWISE NOTED. ALL FINAL DOOR LOCATIONS SHALL BE CONFIRMED WITH ARCHITECT.
   D. DIMENSION STRINGS LISTED WITH A +/- INDICATING THAT THESE DIMSNIONS ARE TO BE WITHIN TOLERANCE WHILE DIMENSIONS OF OTHER ITEMS WITHOUT +/- SHALL BE HELD.

4. CONTRACTOR SHALL BE RESPONSIBLE FOR REVIEWING ALL PARTITIONING TAGS AND COORDINATING FINISH REQUIREMENTS, HOLLOW METAL AND WOOD FRAMES, ETC.

5. REFER TO SITE PLAN FOR LOCATION OF COORDINDATES ORIGIN POINT (X:0, Y:0).

6. SEE A8.06 FOR ADDITIONAL INFORMATION REGARDING REQUIRMENTS FOR ACCESSIBLE RESTROOM AND SHOWER COMPONENTS.

LEGEND

- WOOD STUD WALL
- CMU WALL
- 101 — DOOR TYPE, SEE DOOR SCHEDULE ON SHEET A7.01 — 1

CONSTRUCTION KEY NOTES

1. SINK, OMNIDECK W/ WASHBAR 1, BY BRADLEY
2. PAPER TOWEL DISPENSER, SEMI-RECESSED. DIPLOMAT SERIES MODEL 2A05, BY BRADLEY
3. 42" LONG GRAB BAR. 832 SERIES, BY BRADLEY
4. TOILET PAPER DISPENSER , WALL MOUNTED. MODEL 5402, BY BRADLEY
5. SANITARY NAPKIN DISPOSAL, SEMI-RECESSED. MODEL 4737, BY BRADLEY
6. ACCESSIBLE TOILET, WALL MOUNTED. SEE PLUMBING DRAWINGS FOR ADDITIONAL INFORMATION
7. 9 1/2" X 60" LENOX LOCKER PEDESTAL BENCH, BY BRADLEY
8. SURFACE MOUNTED MIRROR
9. ACCESSIBLE SHOWER SEAT, WALL MOUNTED
10. ACCESSIBLE IN-WALL SHOWER. HN3000 SERIES, BY BRADLEY
11. BACK WALL SHOWER BAR MOUNTED AT 36" AFF
12. 12" LONG GRAB BAR MOUNTED AT 36" AFF
13. 12X24 TILE WALL FINISH
14. GYP. BOARD CEILING SOFFIT SHOWN SCREENED
15. 18" X 30" MIRROR, SURFACE MOUNTED. MODEL 780, BY BRADLEY
16. FLOOR DRAIN. SEE PLUMBING DRAWINGS FOR ADDITIONAL INFORMATION
17. 5/8" THK. TYPE "X" GYPSUM BOARD, PAINTED
18. CONCRETE BLOCK WALL PRECISION VERTICAL SCORE BY ORCO, PAINTED
19. 4X4 TILE WALL FINISH

AGENCY

FLEWELLING & MOODY
architecture planning interiors

HEADQUARTERS OFFICE:
99 S. Lake Avenue, Suite 300
Pasadena, CA 91101
Phone: 323.543.8300
E-Mail: fm-pasadena@flewelling-moody.com

ANTELOPE VALLEY OFFICE:
1035 West Lancaster Bouldvard
Lancaster, California 93534
Phone: 661.949.0771
E-Mail: fm-lancaster@flewelling-moody.com

An Employee Owned Corporation

ARCHITECT

LICENSED ARCHITECT — MATT T. CHOBANIAN — C-14211 — 08/31/2025 — STATE OF CALIFORNIA

CONSULTANT

Drawn by: Author
Check by: Checker
Revisions

No.	Date	Description
1	08/27/2025	BID ALTERNATE

All dimensions must be checked at the job by the contractor who accepts full responsibility for their accuracy under the contract. These plans & the specifications in connection therewith have been prepared for a specific site. Any and all responsibility for their use in whole or in part on any other site is hereby disclaimed by Flewelling & Moody.

CITY OF RIDGECREST

SGT. JOHN PINNEY MEMORIAL POOL REPLACEMENT PROJECT

205 S WARNER ST, RIDGECREST, CA 93555

Drawing Title

ENLARGED RESTROOM / SHOWERS FLOOR PLANS AND ELEVATIONS ALT 5

Job No. 3055-0100

Date 12/20/2024

Sheet No. **A5.06A5**

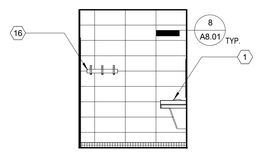

ALL GENDER RESTROOM WEST ELEVATION

SCALE: 1/4" = 1'-0"

14 A5.07

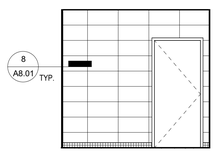

ALL GENDER RESTROOM SOUTH ELEVATION

SCALE: 1/4" = 1'-0"

10 A5.07

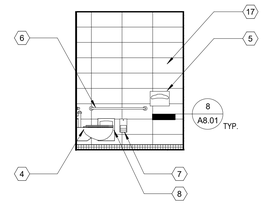

ALL GENDER RESTROOM EAST ELEVATION

SCALE: 1/4" = 1'-0"

6 A5.07

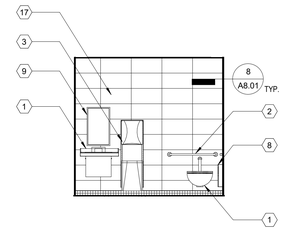

ALL GENDER RESTROOM NORTH ELEVATION

SCALE: 1/4" = 1'-0"

2 A5.07

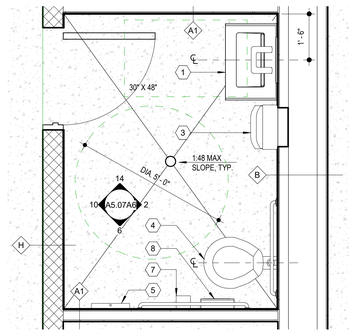

TYP RESTROOM / STORAGE BUILDING ENLARGED RESTROOM FLOOR PLAN

SCALE: 1/2" = 1'-0"

9 A5.07

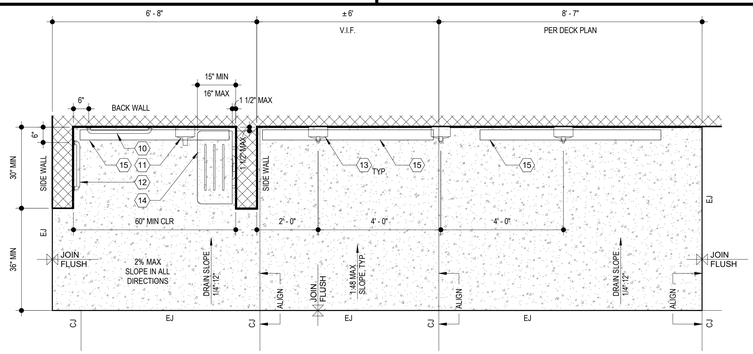

ENLARGED STANDARD ROLL-IN TYPE SHOWER FLOOR PLAN

SCALE: 1/2" = 1'-0"

1 A5.07

GENERAL NOTES

1. REFER TO STRUCTURAL, MECHANICAL, PLUMBING, ELECTRICAL, AND FIRE ALARM DRAWINGS FOR ADDITIONAL APPLICABLE SCOPE OF WORK.

2. CONTRACTOR SHALL VERIFY ALL CONDITIONS PRIOR TO CONSTRUCTION. IF THERE ARE ANY CONFLICTS BETWEEN THESE DOCUMENTS OR BETWEEN THESE DOCUMENTS AND THAT OF OTHER DESIGN TEAM CONSULTANTS, PLEASE NOTIFY THE ARCHITECT IN WRITING, IDENTIFYING THE AREAS IN QUESTION PRIOR TO INSTALLATION OR CONSTRUCTION.

3. DO NOT SCALE THE DRAWINGS. ONLY WRITTEN DIMENSIONS SHALL BE USED. UNLESS OTHERWISE NOTED, THE FOLLOWING DIMENSIONING CRITERIA SHALL BE USED:
   A. FOR GYPSUM BOARD (GWB) AND METAL/WOOD STUD WALL CONSTRUCTION, ALL DIMENSIONS ARE SHOWN TO THE FACE OF STUD. REFER TO THE RESTROOM DRAWINGS FINISH ASSEMBLIES APPLIED TO THE FACE OF GWB ASSEMBLIES.
   B. REFER TO SPECIFIC PARTITION TYPE ON PROJECT PARTITION SCHEDULE FOR DIMESIONS AND FOR ALL UL ASSEMBLY NUMBERS.
   C. DOOR FRAME HINGES ARE LOCATED 4" NOMINALLY OFF THE ADJACENT PERPENDICULAR WALL UNLESS OTHERWISE NOTED. ALL FINAL DOOR LOCATIONS SHALL BE CONFIRMED WITH ARCHITECT.
   D. DIMENSION STRINGS LISTED WITH A +/-, INDICATING THAT THESE DIMSNIONS ARE TO BE WITHIN TOLERANCE WHILE DIMENSIONS OF OTHER ITEMS WITHOUT +/- SHALL BE HELD.

4. CONTRACTOR SHALL BE RESPONSIBLE FOR REVIEWING ALL PARTITIONING TAGS AND COORDINATING FINISH REQUIREMENTS, HOLLOW METAL AND WOOD FRAMES, ETC.

5. REFER TO SITE PLAN FOR LOCATION OF COORDINATES ORIGIN POINT (X:0, Y:0).

6. SEE A8.08 FOR ADDITIONAL INFORMATION REGARDING REQUIRMENTS FOR ACCESSIBLE RESTROOM AND SHOWER COMPONENTS.

LEGEND

	NON-SLIP AND NON ABRASIVE MEDIUM BROOM FINISH CONCRETE TO MATCH ADJACENT POOL DECK.
CJ	CONTROL JOINT. SEE DECK PLAN FOR ADDITIONAL INFORMATION
EJ	EXPANSION JOINT. SEE DECK PLAN FOR ADDITIONAL INFORMATION

CONSTRUCTION KEY NOTES

1. SINK, OMNIDECK W/ WASHBAR 1, BY BRADLEY OR APPROVED EQUAL
2. 36" LONG GRAB BAR. 832 SERIES, BY BRADLEY OR APPROVED EQUAL
3. PAPER TOWEL DISPENSER, SEMI-RECESSED. DIPLOMAT SERIES MODEL 2A25, BY BRADLEY OR APPROVED EQUAL
4. ACCESSIBLE TOILET, WALL MOUNTED. SEE PLUMBING DRAWINGS FOR ADDITIONAL INFORMATION
5. TOILET SEAT COVER DISPENSER, WALL MOUNTED. MODEL 583, BY BRADLEY OR APPROVED EQUAL
6. 42" LONG GRAB BAR. 832 SERIES, BY BRADLEY OR APPROVE EQUAL
7. TOILET PAPER DISPENSER , WALL MOUNTED. MODEL 5402, BY BRADLEY OR APPROVED EQUAL
8. SANITARY NAPKIN DISPOSAL, SEMI-RECESSED. MODEL 4737, BY BRADLEY OR APPROVED EQUAL
9. 18" X 30" MIRROR, SURFACE MOUNTED. MODEL 780, BY BRADLEY OR APPROVED EQUAL
10. 24" LONG GRAB BAR. 832 SERIES, BY BRADLEY OR APPROVED EQUAL. SEE 4/A8.06 FOR ADDIDTIONAL INFORMATION REGARDING ACCESSIBILTY FOR STANDARD ROLL-IN TYPE SHOWERS
11. ACCESSIBLE SHOWER, WALL MOUNTED. MODEL WS-IWCA-ADA, BY BRADLEY OR APPROVED EQUAL. SEE 4/A8.06 FOR ADDIDTIONAL INFORMATION REGARDING ACCESSIBILTY FOR STANDARD ROLL-IN TYPE SHOWERS
12. 18" LONG GRAB BAR. 832 SERIES, BY BRADLEY OR APPROVED EQUAL. SEE 4/A8.06 FOR ADDIDTIONAL INFORMATION REGARDING ACCESSIBILTY FOR STANDARD ROLL-IN TYPE SHOWERS
13. SHOWER, WALL MOUNTED. MODEL WS-IWCA, BY BRADLEY OR APPROVED EQUAL
14. COLLAPSIBLE SHOWER SEAT, WALL MOUNTED. MODEL 9591, BY BRADLEY OR APPROVED EQUAL. SEE 4/A8.06 FOR ADDIDTIONAL INFORMATION REGARDING ACCESSIBILTY FOR STANDARD ROLL-IN TYPE SHOWERS
15. TRENCH DRAIN. KERDI-LINE, BY SCHLUTER OR APPROVED EQUAL
16. TOWEL RACK, WALL MOUNTED. MODEL 9943, BY BRADLEY OR APPROVED EQUAL
17. 12X24 CERAMIC TILE WALL FINISH

AGENCY

REVIEWED FOR CODE COMPLIANCE BY: WILLDAN ENGINEERING

Approval of these plans & specifications shall not be construed to be a permit for, or an approval of any violation of any Federal, State, County or City laws or ordinances. One set of approved plans must be kept on the job until completion.

9:24:18 AM Jul 21, 2025

FLEWELLING & MOODY
architecture planning interiors

HEADQUARTERS OFFICE:
99 S. Lake Avenue, Suite 300
Pasadena, CA 91101
Phone: 323.543.8300
E-Mail: fm-pasadena@flewelling-moody.com

ANTELOPE VALLEY OFFICE:
1035 West Lancaster Bouldvard
Lancaster, California 93534
Phone: 661.949.0771
E-Mail: fm-lancaster@flewelling-moody.com

An Employee Owned Corporation

ARCHITECT

LICENSED ARCHITECT
MATTHEW T. GABBARD
C-14211
06/30/2025
STATE OF CALIFORNIA

CONSULTANT

Drawn by: Author

Check by: Checker

Revisions

No.	Date	Description

All dimensions must be checked at the job by the contractor who accepts full responsibility for their accuracy under the contract. These plans & the specifications in connection therewith have been prepared for a specific site. Any and all responsibility for their use in whole or in part on any other site is hereby disclaimed by Flewelling & Moody.

CITY OF RIDGECREST

SGT. JOHN PINNEY MEMORIAL POOL REPLACEMENT PROJECT

205 S WARNER ST, RIDGECREST, CA 93555

Drawing Title

ENLARGED RESTROOM / SHOWER PLANS AND ELEVATIONS

Job No. 3055-0100

Sheet No. **A5.07**

Date 07/14/2025

GENERAL NOTES

1. REFER TO STRUCTURAL, MECHANICAL, PLUMBING, ELECTRICAL, AND FIRE ALARM DRAWINGS FOR ADDITIONAL APPLICABLE SCOPE OF WORK.

2. CONTRACTOR SHALL VERIFY ALL CONDITIONS PRIOR TO CONSTRUCTION. IF THERE ARE ANY CONFLICTS BETWEEN THESE DOCUMENTS OR BETWEEN THESE DOCUMENTS AND THAT OF OTHER DESIGN TEAM CONSULTANTS, PLEASE NOTIFY THE ARCHITECT IN WRITING, IDENTIFYING THE AREAS IN QUESTION PRIOR TO INSTALLATION OR CONSTRUCTION.

3. DO NOT SCALE THE DRAWINGS. ONLY WRITTEN DIMENSIONS SHALL BE USED. UNLESS OTHERWISE NOTED, THE FOLLOWING DIMENSIONING CRITERIA SHALL BE USED:
   A. FOR GYPSUM BOARD (GWB) AND METAL/WOOD STUD WALL CONSTRUCTION, ALL DIMENSIONS ARE SHOWN TO THE FACE OF STUD. REFER TO THE RESTROOM DRAWINGS FINISH ASSEMBLIES APPLIED TO THE FACE OF GWB ASSEMBLIES.
   B. REFER TO SPECIFIC PARTITION TYPE ON PROJECT PARTITION SCHEDULE FOR DIMESIONS AND FOR ALL UL ASSEMBLY NUMBERS.
   C. DOOR FRAME HINGES ARE LOCATED 4" NOMINALLY OFF THE ADJACENT PERPENDICULAR WALL UNLESS OTHERWISE NOTED. ALL FINAL DOOR LOCATIONS SHALL BE CONFIRMED WITH ARCHITECT.
   D. DIMENSION STRINGS LISTED WITH A +/-, INDICATING THAT THESE DIMSNIONS ARE TO BE WITHIN TOLERANCE WHILE DIMENSIONS OF OTHER ITEMS WITHOUT +/- SHALL BE HELD.

4. CONTRACTOR SHALL BE RESPONSIBLE FOR REVIEWING ALL PARTITIONING TAGS AND COORDINATING FINISH REQUIREMENTS, HOLLOW METAL AND WOOD FRAMES, ETC.

5. REFER TO SITE PLAN FOR LOCATION OF COORDINATES ORIGIN POINT (X:0, Y:0).

6. SEE A8.08 FOR ADDITIONAL INFORMATION REGARDING REQUIRMENTS FOR ACCESSIBLE RESTROOM AND SHOWER COMPONENTS.

LEGEND

	NON-SLIP AND NON ABRASIVE MEDIUM BROOM FINISH CONCRETE TO MATCH ADJACENT POOL DECK.
CJ	CONTROL JOINT. SEE DECK PLAN FOR ADDITIONAL INFORMATION
EJ	EXPANSION JOINT. SEE DECK PLAN FOR ADDITIONAL INFORMATION

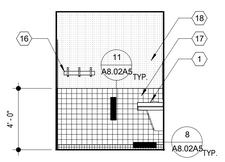

ALL GENDER RESTROOM WEST ELEVATION

SCALE: 1/4" = 1'-0"

14 / A5.07A5

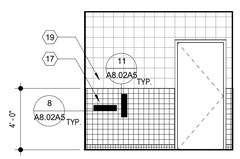

ALL GENDER RESTROOM SOUTH ELEVATION

SCALE: 1/4" = 1'-0"

10 / A5.07A5

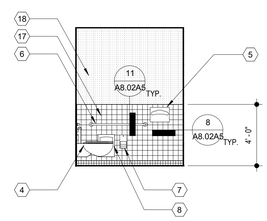

ALL GENDER RESTROOM EAST ELEVATION

SCALE: 1/4" = 1'-0"

6 / A5.07A5

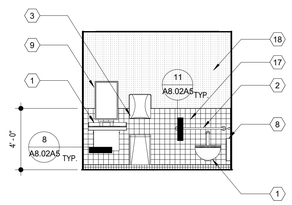

ALL GENDER RESTROOM NORTH ELEVATION

SCALE: 1/4" = 1'-0"

2 / A5.07A5

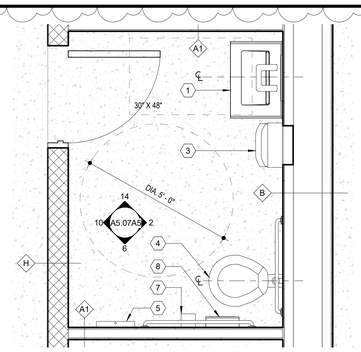

TYP RESTROOM / STORAGE BUILDING ENLARGED RESTROOM FLOOR PLAN

SCALE: 1/2" = 1'-0"

9 / A5.07A5

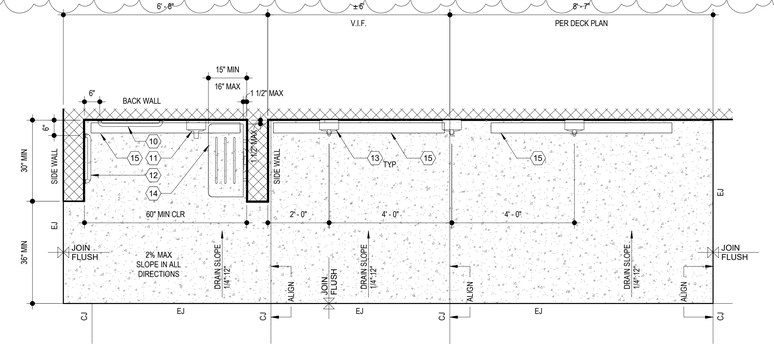

ENLARGED STANDARD ROLL-IN TYPE SHOWER FLOOR PLAN

SCALE: 1/2" = 1'-0"

1 / A5.07A5

CONSTRUCTION KEY NOTES

1. SINK, OMNIDECK W/ WASHBAR 1, BY BRADLEY
2. 36" LONG GRAB BAR. 832 SERIES, BY BRADLEY
3. PAPER TOWEL DISPENSER, SEMI-RECESSED. DIPLOMAT SERIES MODEL 2A25, BY BRADLEY
4. ACCESSIBLE TOILET, WALL MOUNTED. SEE PLUMBING DRAWINGS FOR ADDITIONAL INFORMATION
5. TOILET SEAT COVER DISPENSER, WALL MOUNTED. MODEL 583, BY BRADLEY
6. 42" LONG GRAB BAR. 832 SERIES, BY BRADLEY
7. TOILET PAPER DISPENSER , WALL MOUNTED. MODEL 5402, BY BRADLEY
8. SANITARY NAPKIN DISPOSAL, SEMI-RECESSED. MODEL 4737, BY BRADLEY
9. 18" X 30" MIRROR, SURFACE MOUNTED. MODEL 780, BY BRADLEY
10. 24" LONG GRAB BAR. 832 SERIES, BY BRADLEY. SEE 4/A8.06 FOR ADDIDTIONAL INFORMATION REGARDING ACCESSIBILTY FOR STANDARD ROLL-IN TYPE SHOWERS
11. ACCESSIBLE SHOWER, WALL MOUNTED. MODEL WS-IWCA-ADA, BY BRADLEY. SEE 4/A8.06 FOR ADDIDTIONAL INFORMATION REGARDING ACCESSIBILTY FOR STANDARD ROLL-IN TYPE SHOWERS
12. 18" LONG GRAB BAR. 832 SERIES, BY BRADLEY. SEE 4/A8.06 FOR ADDIDTIONAL INFORMATION REGARDING ACCESSIBILTY FOR STANDARD ROLL-IN TYPE SHOWERS
13. SHOWER, WALL MOUNTED. MODEL WS-IWCA, BY BRADLEY
14. COLLAPSIBLE SHOWER SEAT, WALL MOUNTED. MODEL 9591, BY BRADLEY. SEE 4/A8.06 FOR ADDIDTIONAL INFORMATION REGARDING ACCESSIBILTY FOR STANDARD ROLL-IN TYPE SHOWERS
15. TRENCH DRAIN. KERDI-LINE, BY SCHLUTER
16. TOWEL RACK, WALL MOUNTED. MODEL 9943, BY BRADLEY
17. 4X4 TILE WALL FINISH
18. 5/8" THK. TYPE 'X' GYPSUM BOARD, PAINTED
19. CONCRETE BLOCK WALL PRECISION VERTICAL SCORE BY ORCO, PAINTED

AGENCY

FLEWELLING & MOODY
architecture planning interiors

HEADQUARTERS OFFICE:
99 S. Lake Avenue, Suite 300
Pasadena, CA 91101
Phone: 323.543.8300
E-Mail: fm-pasadena@flewelling-moody.com

ANTELOPE VALLEY OFFICE:
1035 West Lancaster Bouldvard
Lancaster, California 93534
Phone: 661.949.0771
E-Mail: fm-lancaster@flewelling-moody.com

An Employee Owned Corporation

ARCHITECT

LICENSED ARCHITECT
MATT T. GABBERT
C-14211
06/30/2026
STATE OF CALIFORNIA

CONSULTANT

Drawn by: Author
Check by: Checker
Revisions

No.	Date	Description
1	08/27/2025	Revision 2

All dimensions must be checked at the job by the contractor who accepts full responsibility for their accuracy under the contract. These plans & the specifications in connection therewith have been prepared for a specific site. Any and all responsibility for their use in whole or in part on any other site is hereby disclaimed by Flewelling & Moody.

CITY OF RIDGECREST

SGT. JOHN PINNEY MEMORIAL POOL REPLACEMENT PROJECT

205 S WARNER ST, RIDGECREST, CA 93555

Drawing Title

ENLARGED RESTROOM / SHOWER PLANS AND ELEVATIONS ALT 5

Job No. 3055-0100

Sheet No. **A5.07A5**

Date 12/20/2024

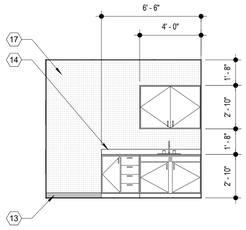

105 - SICK BAY WEST ELEVATION

SCALE: 1/4" = 1'-0"

16 A5.11

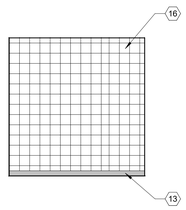

105 - SICK BAY SOUTH ELEVATION

SCALE: 1/4" = 1'-0"

12 A5.11

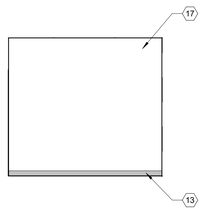

105 - SICK BAY EAST ELEVATION

SCALE: 1/4" = 1'-0"

8 A5.11

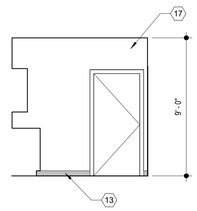

105 - SICK BAY NORTH ELEVATION

SCALE: 1/4" = 1'-0"

4 A5.11

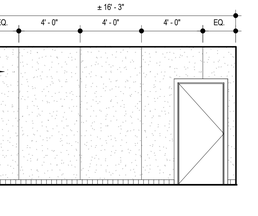

106 - LIFEGAURD FACILITIES WEST ELEVATION

SCALE: 1/4" = 1'-0"

15 A5.11

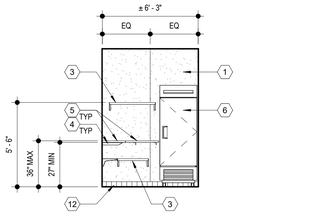

106 - LIFEGAURD FACILITIES SOUTH ELEVATION

SCALE: 1/4" = 1'-0"

11 A5.11

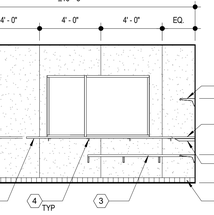

106 - LIFEGAURD FACILITIES EAST ELEVATION

SCALE: 1/4" = 1'-0"

7 A5.11

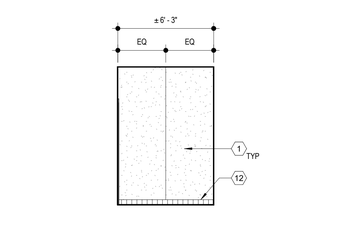

106 - LIFEGAURD FACILITIES NORTH ELEVATION

SCALE: 1/4" = 1'-0"

3 A5.11

119 - SERVICE KITCHEN WEST ELEVATION

SCALE: 1/4" = 1'-0"

14 A5.11

119 - SERVICE KITCHEN SOUTH ELEVATION

SCALE: 1/4" = 1'-0"

10 A5.11

119 - SERVICE KITCHEN EAST ELEVATION

SCALE: 1/4" = 1'-0"

6 A5.11

119 - SERVICE KITCHEN NORTH ELEVATION

SCALE: 1/4" = 1'-0"

2 A5.11

118 - CONCESSIONS WEST ELEVATION

SCALE: 1/4" = 1'-0"

13 A5.11

118 - CONCESSIONS SOUTH ELEVATION

SCALE: 1/4" = 1'-0"

9 A5.11

118 - CONCESSIONS EAST ELEVATION

SCALE: 1/4" = 1'-0"

5 A5.11

118 - CONCESSIONS NORTH ELEVATION

SCALE: 1/4" = 1'-0"

1 A5.11

GENERAL NOTES

1. REFER TO STRUCTURAL, MECHANICAL, PLUMBING, AND ELECTRICAL DRAWINGS FOR ADDITIONAL APPLICABLE SCOPE OF WORK.

2. CONTRACTOR SHALL VERIFY ALL CONDITIONS PRIOR TO CONSTRUCTION. ALL DISCREPANCIES SHALL BE BROUGHT TO THE ATTENTION OF OWNER AND ARCHITECT PRIOR TO COMMENCING WORK.

CONSTRUCTION KEY NOTES

1. FIBER REINFORCED PANEL WALL FINISH
2. TYPE 304 STAINLESS STEEL WALL PANEL FINISH
3. STAINLESS STEEL WALL MOUNTED SHELVES
4. 2" X 2" X 1/4" ANGLE. SEE 12/A8.07FOR ATTACHMENT METHOD
5. 1-1/4" STAINLESS STEEL COUNTERTOP
6. 29" SOLID DOOR REACH-IN FREEZER. OWNER PROVIDED CONTRACTOR INSTALLED
7. 29" SOLID DOOR REACH-IN REFRIGERATOR. OWNER PROVIDED CONTRACTOR INSTALLED
8. FULL SIZE FOOD WARMER. OWNER PROVIDED CONTRACTOR INSTALLED
9. THREE COMPARTMENT SINK WITH DRAINBOARD. MODEL 600HS17KODST BY REGENCY TABLES AND SINKS OR APPROVED EQUAL
10. WALL MOUNTED SINK. MODEL 600HS17 BY REGENCY TABLES AND SINKS OR APPROVED EQUAL
11. STAINLESS STEEL WALL MOUNTED SHELF WITH DOUBLE PRONG STORAGE HOOKS
12. 6" QUARRY TILE COVE BASE
13. 4" RUBBER BASE COVE
14. 4" BACKSPLASH
15. WALL MOUNTED TV. OWNER PROVIDED OWNER INSTALLED
16. CMU WALL PER PLAN
17. 5/8" THK. TYPE 'X' GYPSUM BOARD, PAINTED
18. REFRIGERATOR. OWNER PROVIDED CONTRACTOR INSTALLED
19. FIRE EXTINGUISHER CABINET. SEE 6/A8.09 FOR ADDITIONAL INFORMATION
20. SURFACE MOUNTED TOWEL DISPENSER BY BRADLEY MODEL 252 OR APPROVED EQUAL
21. SURFACE MOUNTED SOAP DISPENSER BY BRADLEY MODEL 6562 OR APPROVED EQUAL

AGENCY

REVIEWED FOR CODE COMPLIANCE BY: WILLDAN ENGINEERING

Approval of these plans & specifications shall not be construed to be a permit for, or an approval of any violation of any Federal, State, County or City laws or ordinances. One set of approved plans must be kept on the job until completion.

9:24:20 AM Jul 21, 2025

FLEWELLING & MOODY
architecture planning interiors

HEADQUARTERS OFFICE:
99 S. Lake Avenue, Suite 300
Pasadena, CA 91101
Phone: 323.543.8300
E-Mail: fm-pasadena@flewelling-moody.com

ANTELOPE VALLEY OFFICE:
1035 West Lancaster Bouldvard
Lancaster, California 93534
Phone: 661.949.0771
E-Mail: fm-lancaster@flewelling-moody.com

An Employee Owned Corporation

ARCHITECT

LICENSED ARCHITECT — MATT T. GABBARD — C-14211 — 06/30/2025 — STATE OF CALIFORNIA

CONSULTANT

Drawn by: Author

Check by: Checker

Revisions

No.	Date	Description

All dimensions must be checked at the job by the contractor who accepts full responsibility for their accuracy under the contract. These plans & the specifications in connection therewith have been prepared for a specific site. Any and all responsibility for their use in whole or in part on any other site is hereby disclaimed by Flewelling & Moody.

CITY OF RIDGECREST

SGT. JOHN PINNEY MEMORIAL POOL REPLACEMENT PROJECT

205 S WARNER ST, RIDGECREST, CA 93555

Drawing Title

INTERIOR ELEVATIONS

Job No. 3055-0100

Sheet No. **A5.11**

Date 07/14/2025

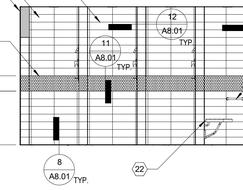

112 - MALE LOCKER ROOM EAST ELEVATION

SCALE: 1/4" = 1'-0"

15 A5.12

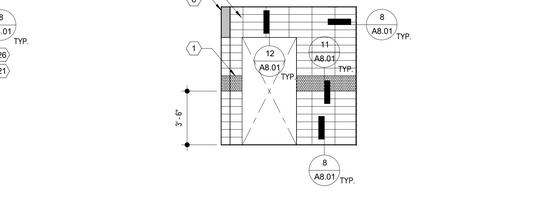

112 - MALE LOCKER ROOM SOUTH ELEVATION

SCALE: 1/4" = 1'-0"

11 A5.12

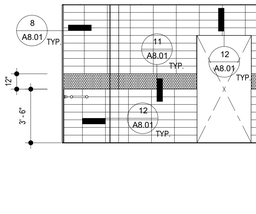

112 - MALE LOCKER ROOM WEST ELEVATION

SCALE: 1/4" = 1'-0"

7 A5.12

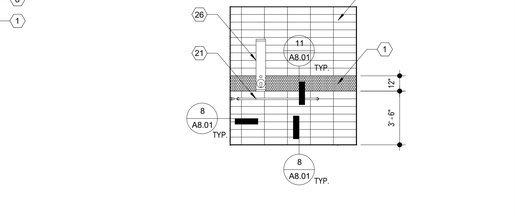

112 - MALE LOCKER ROOM NORTH ELEVATION

SCALE: 1/4" = 1'-0"

3 A5.12

112 - MALE VANITY SPACE WEST ELEVATION

SCALE: 1/4" = 1'-0"

14 A5.12

112 - MALE VANITY SPACE SOUTH ELEVATION

SCALE: 1/4" = 1'-0"

10 A5.12

112 - MALE VANITY SPACE EAST ELEVATION

SCALE: 1/4" = 1'-0"

6 A5.12

112 - MALE VANITY SPACE NORTH ELEVATION

SCALE: 1/4" = 1'-0"

2 A5.12

114 - MALE SHOWERS WEST ELEVATION

SCALE: 1/4" = 1'-0"

13 A5.12

114 - MALE SHOWERS SOUTH ELEVATION

SCALE: 1/4" = 1'-0"

9 A5.12

114 - MALE SHOWERS EAST ELEVATION

SCALE: 1/4" = 1'-0"

5 A5.12

114 - MALE SHOWERS NORTH ELEVATION

SCALE: 1/4" = 1'-0"

1 A5.12

GENERAL NOTES

1. REFER TO STRUCTURAL, MECHANICAL, PLUMBING, AND ELECTRICAL DRAWINGS FOR ADDITIONAL APPLICABLE SCOPE OF WORK.

2. CONTRACTOR SHALL VERIFY ALL CONDITIONS PRIOR TO CONSTRUCTION. ALL DISCREPANCIES SHALL BE BROUGHT TO THE ATTENTION OF OWNER AND ARCHITECT PRIOR TO COMMENCING WORK.

CONSTRUCTION KEY NOTES

1. HEXAGON TILE WALL FINISH
2. MIRROR, SURFACE MOUNTED
3. PAPER TOWEL DISPENSER, WALL MOUNTED. DIPLOMAT 2A10, BY BRADLEY OR APPROVED EQUAL
4. SINK, OMNIDECK W/ WASHBAR 1, BY BRADLEY OR APPROVED EQUAL
5. 6X18 TILE WALL FINISH
6. BABY CHANGING STATION, RECESSED. MODEL 962, BY BRADLEY OR APPROVED EQUALWITH OPERABLE PARTS AT 48" MAX ABOVE FINISH FLOOR
7. WASTE RECEPTACLE, SEMI-RECESSED. MODEL 344, BY BRADLEY OR APPROVED EQUAL
8. WALL SECTION AT OPENING SHOWN SCREENED
9. WASTE RECEPTACLE, SURFACE MOUNTED. MODEL 344, BY BRADLEY OR APPROVED EQUAL
10. TOILET, WALL MOUNTED. SEE PLUMBING FOR SPECIFICATIONS
11. TOILET SEAT COVER DISPENSER, SURFACE MOUNTED. MODEL 583, BY BRADLEY OR APPROVED EQUAL
12. 36" LONG GRAB BAR. 832 SERIES, BY BRADLEY OR APPROVED EQUAL
13. 42" LONG GRAB BAR. 832 SERIES, BY BRADLEY OR APPROVED EQUAL
14. SANITARY NAPKIN DISPOSAL, RECESSED. MODEL 4737, BY BRADLEY OR APPROVED EQUAL
15. TOILET PAPER DISPENSER , WALL MOUNTED. MODEL 5402, BY BRADLEY OR APPROVED EQUAL
16. ACCESSIBLE LOCKER, BY BRADLEY OR APPROVAED EQUAL
17. PAPER TOWEL DISPENSER, SEMI-RECESSED. DIPLOMAT SERIES MODEL 2A25, BY BRADLEY OR APPROVED EQUAL
18. 18" X 30" MIRROR, SURFACE MOUNTED. MODEL 780, BY BRADLEY OR APPROVED EQUAL
19. URINAL, WALL MOUNTED. SEE PLUMBING FOR SPECIFICATIONS
20. ACCESSIBLE URINAL, WALL MOUNTED SEE PLUMBING FOR SPECIFIATIONS
21. 36" X 42" L-SHAPED GRAB BAR
22. ACCESSIBLE FOLDABLE WALL MOUNTED SHOWER SEAT. MODEL 9569, BY BRADLEY OR APPROVED EQUAL
23. INDIVIDUAL FLUSH MOUNTED WALL SHOWER. MODEL WS-1F, BY BRADLEY OR APPROVED EQUAL
24. LENOX LOCKER PEDESTAL BENCH, BY BRADLEY OR APPROVED EQUAL
25. STANDARD LOCKER, BY BRADLEY OR APPROVED EQUAL
26. ACCESSIBLE INDIVIDUAL WALL SHOWER. MODEL WS-1X-HN, BY BRADLEY OR APPROVED EQUAL
27. 24" X 48" LENOX LOCKER PEDESTAL BENCH, BY BRADLEY OR APPROVED EQUAL

AGENCY

REVIEWED FOR CODE COMPLIANCE BY: WILLDAN ENGINEERING

Approval of these plans & specifications shall not be construed to be a permit for, or an approval of any violation of any Federal, State, County or City laws or ordinances. One set of approved plans must be kept on the job until completion.

9:24:21 AM Jul 21, 2025

FLEWELLING & MOODY
architecture planning interiors

HEADQUARTERS OFFICE:
99 S. Lake Avenue, Suite 300
Pasadena, CA 91101
Phone: 323.543.8300
E-Mail: fm-pasadena@flewelling-moody.com

ANTELOPE VALLEY OFFICE:
1035 West Lancaster Boulevard
Lancaster, California 93534
Phone: 661.949.0771
E-Mail: fm-lancaster@flewelling-moody.com

An Employee Owned Corporation

ARCHITECT

LICENSED ARCHITECT
MATT T. CARD
C-14211
RENEWAL 08/31/2025
STATE OF CALIFORNIA

CONSULTANT

Drawn by: Author
Check by: Checker
Revisions

No.	Date	Description

All dimensions must be checked at the job by the contractor who accepts full responsibility for their accuracy under the contract. These plans & the specifications in connection therewith have been prepared for a specific site. Any and all responsibility for their use in whole or in part on any other site is hereby disclaimed by Flewelling & Moody.

CITY OF RIDGECREST

SGT. JOHN PINNEY MEMORIAL POOL REPLACEMENT PROJECT

205 S WARNER ST, RIDGECREST, CA 93555

Drawing Title

INTERIOR ELEVATIONS

Job No. 3055-0100

Sheet No. **A5.12**

Date 07/14/2025

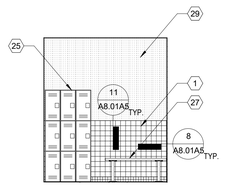

112 - MALE LOCKER ROOM WEST ELEVATION

SCALE: 1/4" = 1'-0"

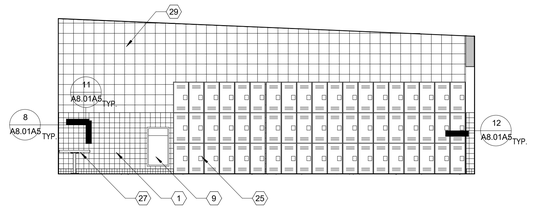

112 - MALE LOCKER ROOM SOUTH ELEVATION

15 A5.12A5

SCALE: 1/4" = 1'-0"

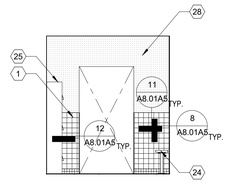

112 - MALE LOCKER ROOM EAST ELEVATION

11 A5.12A5

SCALE: 1/4" = 1'-0"

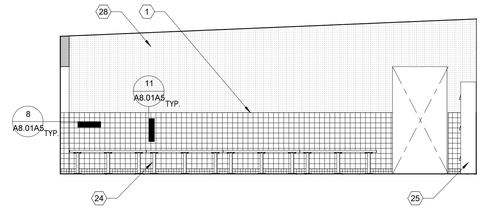

112 - MALE LOCKER ROOM NORTH ELEVATION

7 A5.12A5

SCALE: 1/4" = 1'-0"

3 A5.12A5

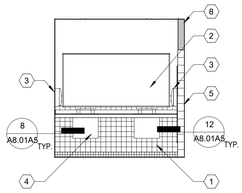

112 - MALE VANITY SPACE WEST ELEVATION

SCALE: 1/4" = 1'-0"

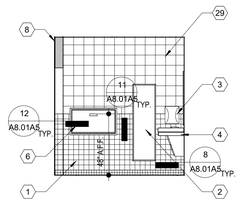

112 - MALE VANITY SPACE SOUTH ELEVATION

14 A5.12A5

SCALE: 1/4" = 1'-0"

10 A5.12A5

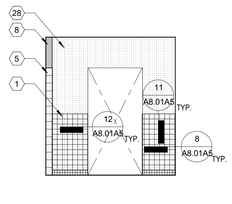

112 - MALE VANITY SPACE EAST ELEVATION

6 A5.12A5

SCALE: 1/4" = 1'-0"

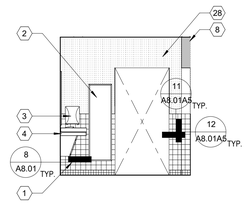

112 - MALE VANITY SPACE NORTH ELEVATION

2 A5.12A5

SCALE: 1/4" = 1'-0"

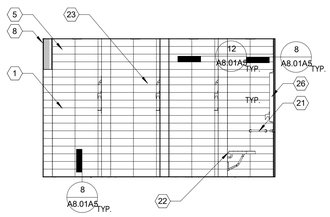

114 - MALE SHOWERS WEST ELEVATION

SCALE: 1/4" = 1'-0"

13 A5.12A5

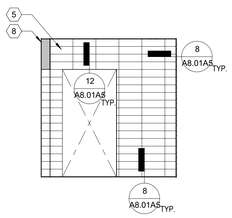

114 - MALE SHOWERS SOUTH ELEVATION

9 A5.12A5

SCALE: 1/4" = 1'-0"

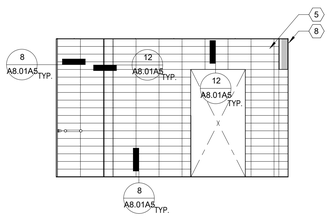

114 - MALE SHOWERS EAST ELEVATION

5 A5.12A5

SCALE: 1/4" = 1'-0"

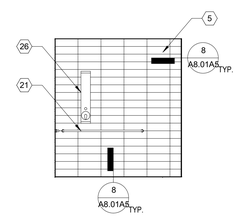

114 - MALE SHOWERS NORTH ELEVATION

1 A5.12A5

SCALE: 1/4" = 1'-0"

GENERAL NOTES

1. REFER TO STRUCTURAL, MECHANICAL, PLUMBING, ELECTRICAL, AND FIRE ALARM DRAWINGS FOR ADDITIONAL APPLICABLE SCOPE OF WORK.

2. CONTRACTOR SHALL VERIFY ALL CONDITIONS PRIOR TO CONSTRUCTION. ALL DISCREPANCIES SHALL BE BROUGHT TO THE ATTENTION OF OWNER AND ARCHITECT PRIOR TO COMMENCING WORK.

CONSTRUCTION KEY NOTES

1. 4X4 TILE WALL FINISH
2. MIRROR, SURFACE MOUNTED
3. PAPER TOWEL DISPENSER, WALL MOUNTED. DIPLOMAT 2A10, BY BRADLEY
4. SINK, OMNIDECK W/ WASHBAR 1, BY BRADLEY
5. 6X18 TILE WALL FINISH
6. BABY CHANGING STATION, RECESSED. MODEL 962, BY BRADLEY WITH OPERABLE PARTS AT 48" MAX ABOVE FINISH FLOOR
7. WASTE RECEPTACLE, SEMI-RECESSED. MODEL 344, BY BRADLEY
8. WALL SECTION AT OPENING SHOWN SCREENED
9. WASTE RECEPTACLE, SURFACE MOUNTED. MODEL 344, BY BRADLEY
10. TOILET, WALL MOUNTED. SEE PLUMBING FOR SPECIFICATIONS
11. TOILET SEAT COVER DISPENSER, SURFACE MOUNTED. MODEL 583, BY BRADLEY
12. 36" LONG GRAB BAR. 832 SERIES, BY BRADLEY
13. 42" LONG GRAB BAR. 832 SERIES, BY BRADLEY
14. SANITARY NAPKIN DISPOSAL, RECESSED. MODEL 4737, BY BRADLEY
15. TOILET PAPER DISPENSER , WALL MOUNTED. MODEL 5402, BY BRADLEY
16. NOT USED
17. PAPER TOWEL DISPENSER, SEMI-RECESSED. DIPLOMAT SERIES MODEL 2A25, BY BRADLEY
18. 18" X 30" MIRROR, SURFACE MOUNTED. MODEL 780, BY BRADLEY
19. URINAL, WALL MOUNTED. SEE PLUMBING FOR SPECIFICATIONS
20. ACCESSIBLE URINAL, WALL MOUNTED SEE PLUMBING FOR SPECIFIATIONS
21. 36" X 42" L-SHAPED GRAB BAR
22. ACCESSIBLE FOLDABLE WALL MOUNTED SHOWER SEAT. MODEL 9569, BY BRADLEY
23. INDIVIDUAL FLUSH MOUNTED WALL SHOWER. MODEL WS-1F, BY BRADLEY
24. 9 1/2" X 60" LENOX LOCKER PEDESTAL BENCH, BY BRADLEY
25. STANDARD LOCKER, BY BRADLEY
26. ACCESSIBLE INDIVIDUAL WALL SHOWER. MODEL WS-1X-HN, BY BRADLEY
27. 24" X 48" LENOX LOCKER PEDESTAL BENCH, BY BRADLEY
28. 5/8" THK. TYPE "X" GYPSUM BOARD, PAINTED
29. CONCRETE BLOCK WALL PRECISION VERTICAL SCORE BY ORCO, PAINTED

AGENCY

FLEWELLING & MOODY
architecture planning interiors

HEADQUARTERS OFFICE:
99 S. Lake Avenue, Suite 300
Pasadena, CA 91101
Phone: 323.543.8300
E-Mail: fm-pasadena@flewelling-moody.com

ANTELOPE VALLEY OFFICE:
1035 West Lancaster Boulevard
Lancaster, California 93534
Phone: 661.949.0771
E-Mail: fm-lancaster@flewelling-moody.com

An Employee Owned Corporation

ARCHITECT



CONSULTANT

Drawn by: Author

Check by: Checker

Revisions

No.	Date	Description
1	08/27/2025	BID ALTERNATE

All dimensions must be checked at the job by the contractor who accepts full responsibility for their accuracy under the contract. These plans & the specifications in connection therewith have been prepared for a specific site. Any and all responsibility for their use in whole or in part on any other site is hereby disclaimed by Flewelling & Moody.

CITY OF RIDGECREST

SGT. JOHN PINNEY MEMORIAL POOL REPLACEMENT PROJECT

205 S WARNER ST, RIDGECREST, CA 93555

Drawing Title

INTERIOR ELEVATIONS ALT 5

Job No. 3055-0100

Date 12/20/2024

Sheet No. **A5.12A5**

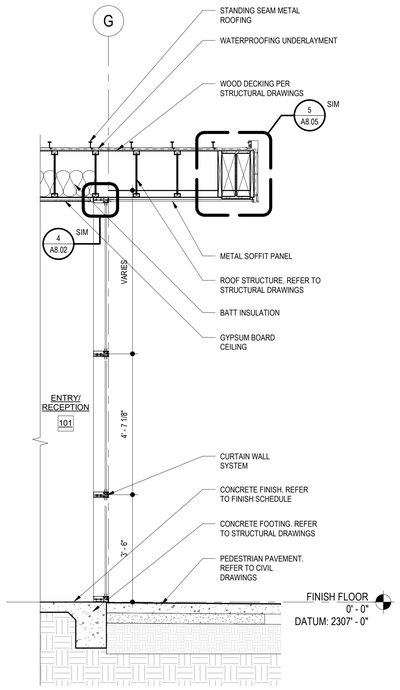

WALL SECTION 10

SCALE: 1/2" = 1'-0"

19 A6.01

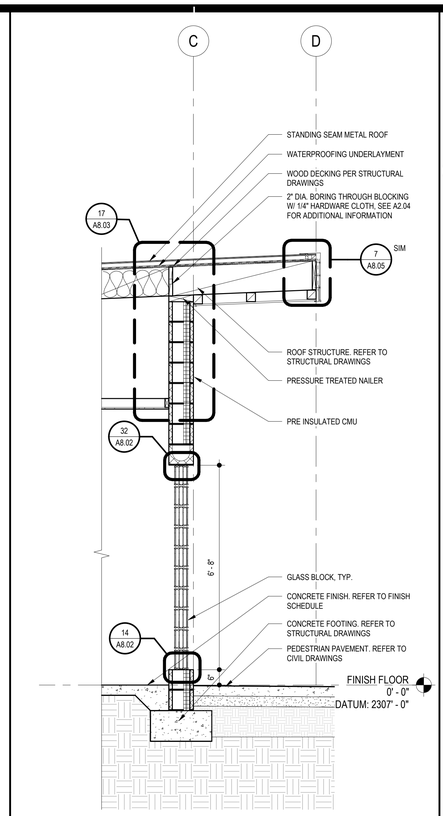

WALL SECTION 8

SCALE: 1/2" = 1'-0"

15 A6.01

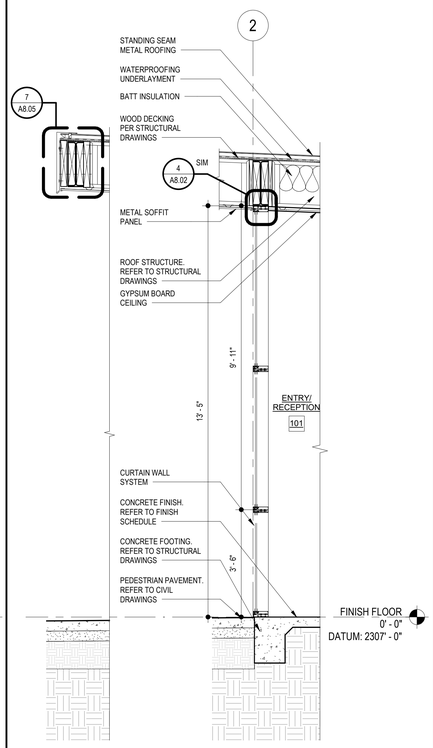

WALL SECTION 6

SCALE: 1/2" = 1'-0"

11 A6.01

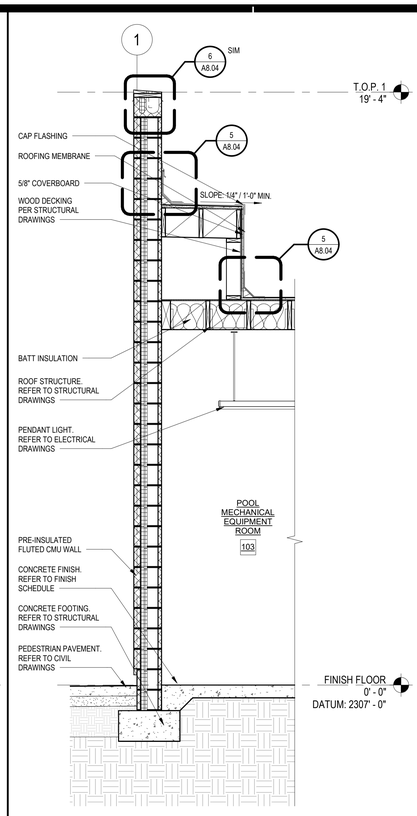

WALL SECTION 4

SCALE: 1/2" = 1'-0"

7 A6.01

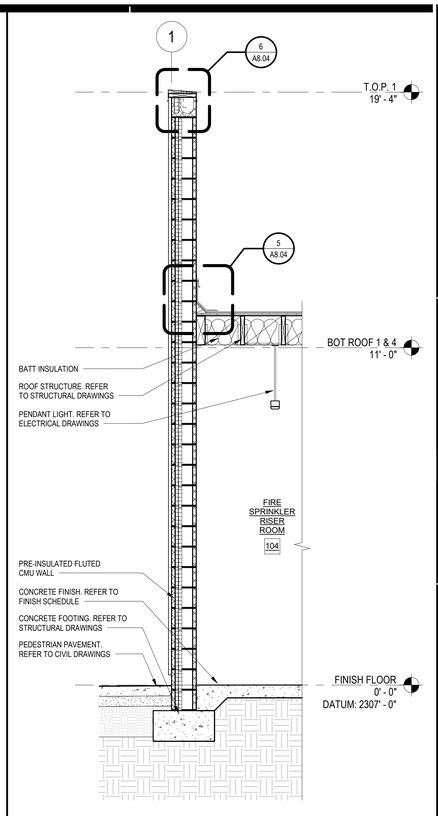

WALL SECTION 2

SCALE: 1/2" = 1'-0"

3 A6.01

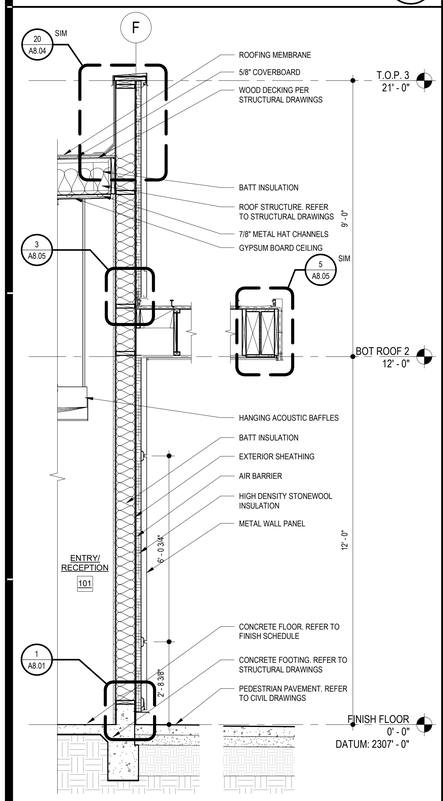

WALL SECTION 9

SCALE: 1/2" = 1'-0"

17 A6.01

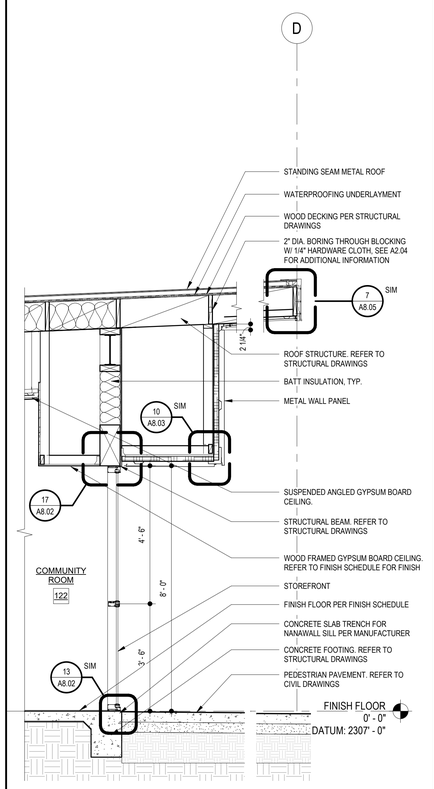

WALL SECTION 7

SCALE: 1/2" = 1'-0"

13 A6.01

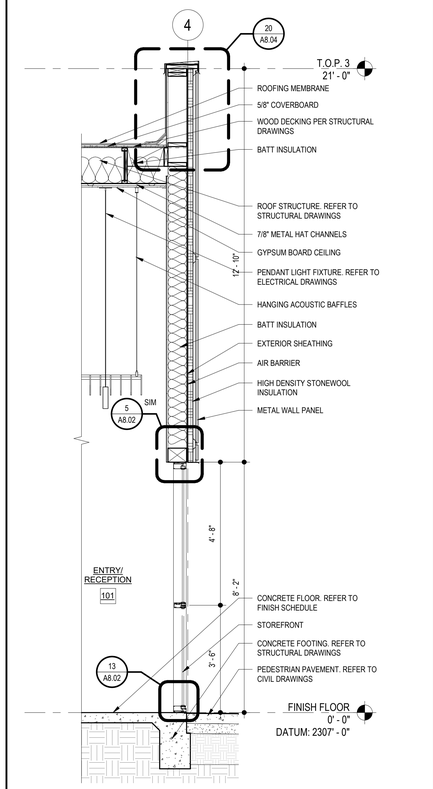

WALL SECTION 5

SCALE: 1/2" = 1'-0"

9 A6.01

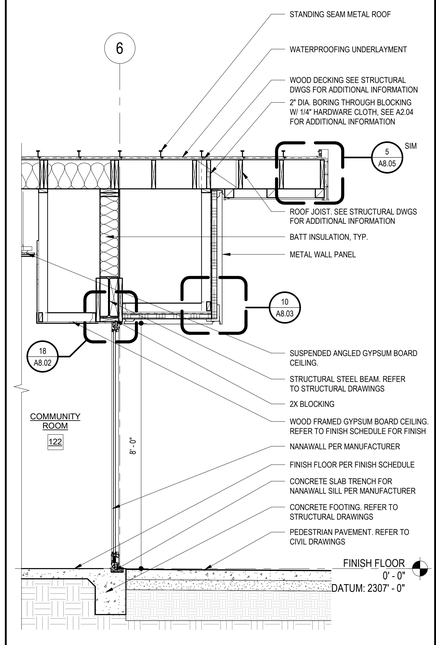

WALL SECTION 3

SCALE: 1/2" = 1'-0"

5 A6.01

NOTES:
1) PRE-INSULATED CMU BLOCK ON COMMUNITY BUILDING AS SHOWN IN WALL SECTION. NON-INSULATED CMU BLOCK ON THE DETACHED RESTROOM BUILDING

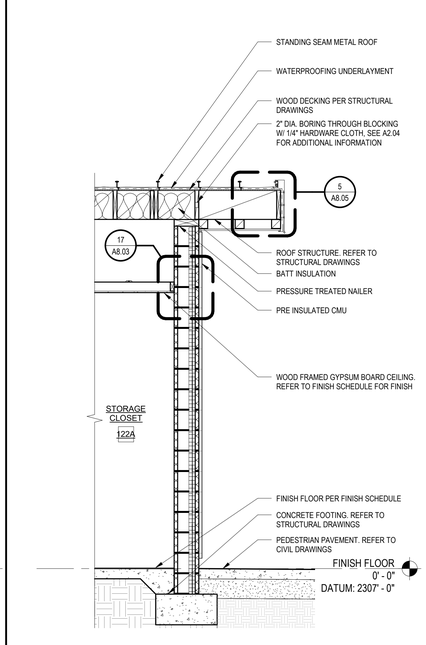

WALL SECTION 1

SCALE: 1/2" = 1'-0"

1 A6.01

AGENCY

REVIEWED FOR CODE COMPLIANCE BY: WILLDAN ENGINEERING

Approval of these plans & specifications shall not be construed to be a permit for, or an approval of any violation of any Federal, State, County or City laws or ordinances. One set of approved plans must be kept on the job until completion.

9:24:23 AM Jul 21, 2025

FLEWELLING & MOODY
architecture planning interiors

HEADQUARTERS OFFICE:
99 S. Lake Avenue, Suite 300
Pasadena, CA 91101
Phone: 323.543.8300
E-Mail: fm-pasadena@flewelling-moody.com

ANTELOPE VALLEY OFFICE:
1035 West Lancaster Boulevard
Lancaster, California 93534
Phone: 661.949.0771
E-Mail: fm-lancaster@flewelling-moody.com

An Employee Owned Corporation

ARCHITECT

LICENSED ARCHITECT — MATTHEW T. GARDNER — C-14211 — 06/30/2026 — STATE OF CALIFORNIA

CONSULTANT

Drawn by: Author
Check by: Checker
Revisions

No.	Date	Description

All dimensions must be checked at the job by the contractor who accepts full responsibility for their accuracy under the contract. These plans & the specifications in connection therewith have been prepared for a specific site. Any and all responsibility for their use in whole or in part on any other site is hereby disclaimed by Flewelling & Moody.

CITY OF RIDGECREST

SGT. JOHN PINNEY MEMORIAL POOL REPLACEMENT PROJECT

205 S WARNER ST, RIDGECREST, CA 93555

Drawing Title

WALL SECTIONS

Job No. 3055-0100

Sheet No. **A6.01**

Date 07/14/2025

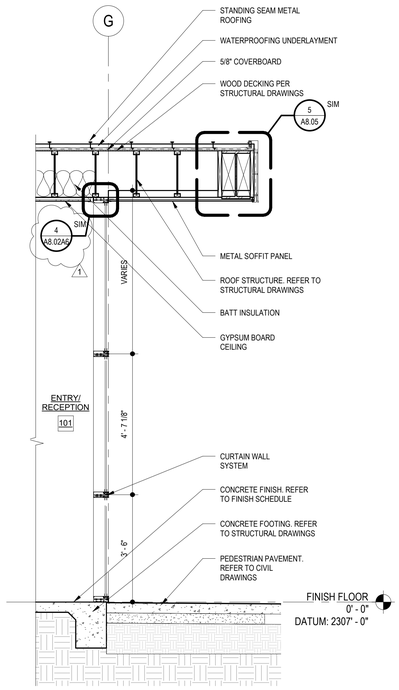

WALL SECTION 10

SCALE: 1/2" = 1'-0"

19 / A6.01A6

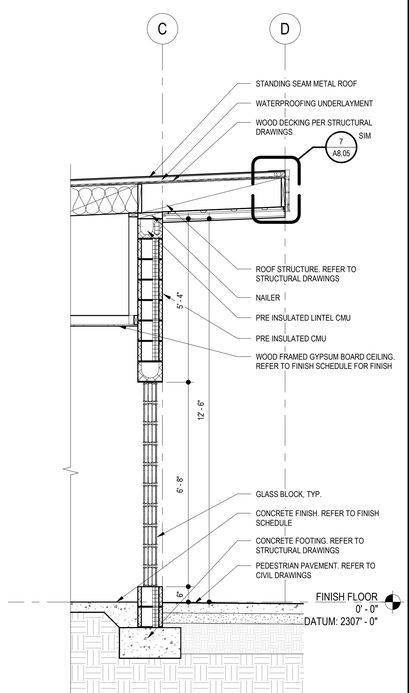

WALL SECTION 8

SCALE: 1/2" = 1'-0"

15 / A6.01A6

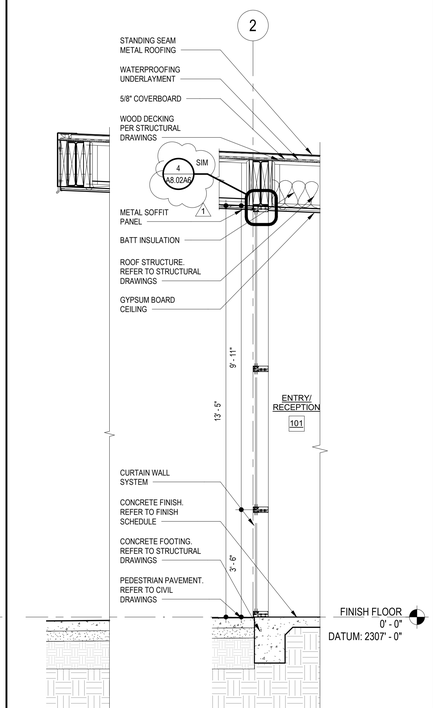

WALL SECTION 6

SCALE: 1/2" = 1'-0"

11 / A6.01A6

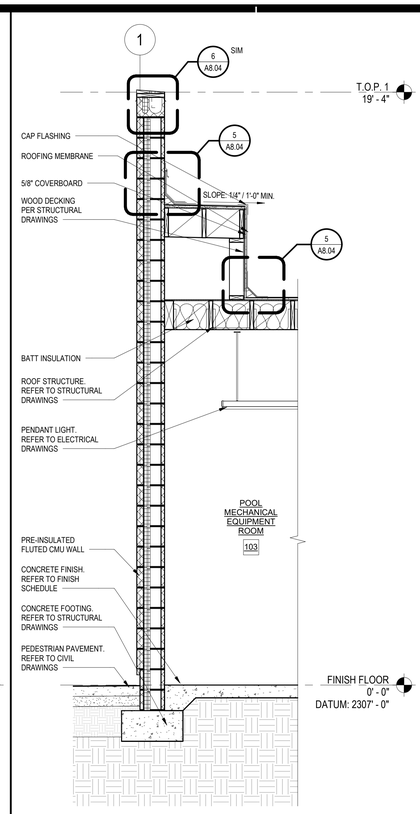

WALL SECTION 4

SCALE: 1/2" = 1'-0"

7 / A6.01A6

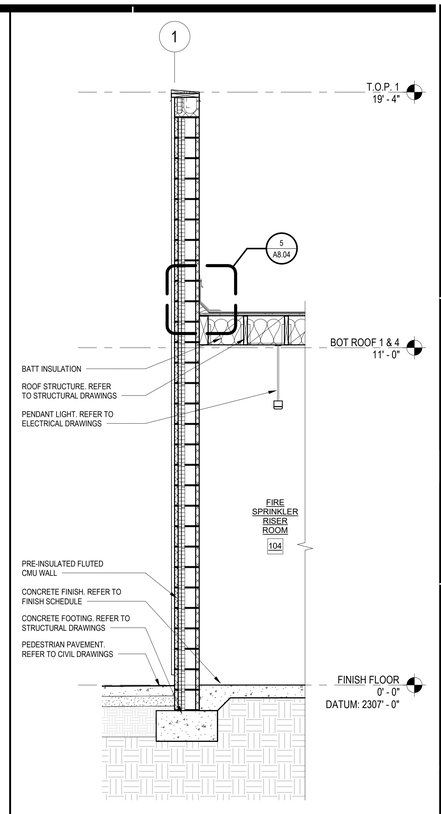

WALL SECTION 2

SCALE: 1/2" = 1'-0"

3 / A6.01A6

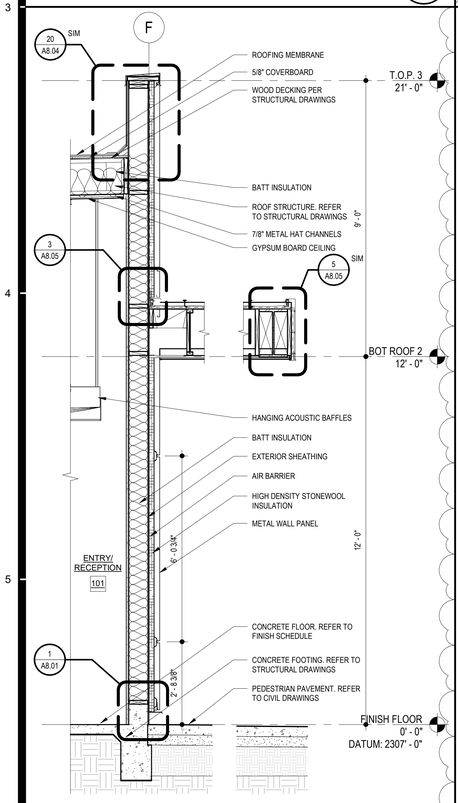

WALL SECTION 9

SCALE: 1/2" = 1'-0"

17 / A6.01A6

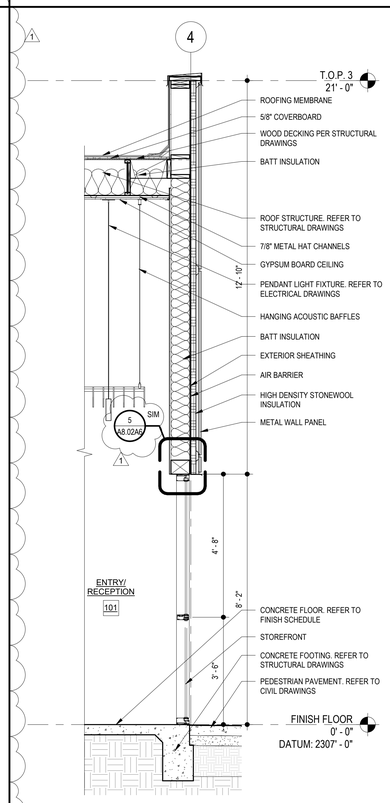

WALL SECTION 5

SCALE: 1/2" = 1'-0"

9 / A6.01A6

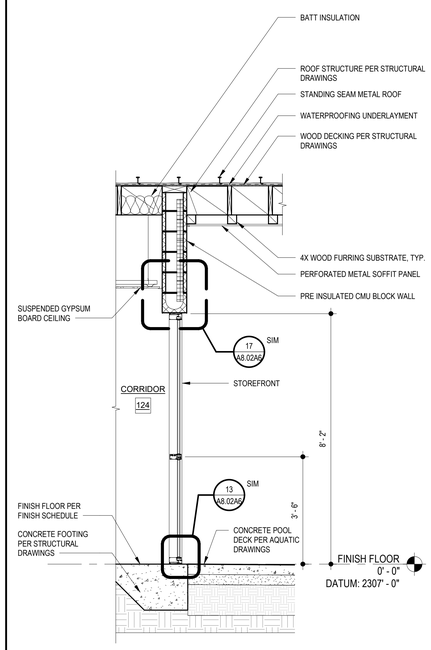

WALL SECTION 1

SCALE: 1/2" = 1'-0"

1 / A6.01A6

AGENCY

FLEWELLING & MOODY
architecture planning interiors

HEADQUARTERS OFFICE:
99 S. Lake Avenue, Suite 300
Pasadena, CA 91101
Phone: 323.543.8300
E-Mail: fm-pasadena@flewelling-moody.com

ANTELOPE VALLEY OFFICE:
1035 West Lancaster Boulevard
Lancaster, California 93534
Phone: 661.949.0771
E-Mail: fm-lancaster@flewelling-moody.com

An Employee Owned Corporation

ARCHITECT

LICENSED ARCHITECT
MATTHEW T. GARDNER
C-14211
08/31/2025
STATE OF CALIFORNIA

CONSULTANT

Drawn by: Author
Check by: Checker

Revisions

No.	Date	Description
1	08/27/2025	BID ALTERNATE

All dimensions must be checked at the job by the contractor who accepts full responsibility for their accuracy under the contract. These plans & the specifications in connection therewith have been prepared for a specific site. Any and all responsibility for their use in whole or in part on any other site is hereby disclaimed by Flewelling & Moody.

CITY OF RIDGECREST

SGT. JOHN PINNEY MEMORIAL POOL REPLACEMENT PROJECT

205 S WARNER ST, RIDGECREST, CA 93555

Drawing Title

WALL SECTIONS ALT 6

Job No. 3055-0100

Date 12/20/2024

Sheet No. **A6.01A6**

DOOR SCHEDULE

DOOR NO	DOOR TYPE	DOOR SIZE	DOOR SWING	DOOR MAT'L	FRAME MAT'L	DETAILS HEAD	DETAILS JAMB	DETAILS THRESHOLD	HDWR SET	FIRE RATING (MINUTES)	REMARKS
101A	J	PR. 6'0" X 8'-0" X 1 3/4"	90	TG	ALUM	4/A8.02			1	0	INSUL, PANIC HARDWARE
101B	J	PR. 6'0" X 8'-0" X 1 3/4"	90	TG	ALUM	5/A8.02	3/A8.02	1/A8.02	1	0	INSUL
101C	D	3'-0" X 7'-0" X 1 3/4"	90	WD	HM	7/A8.02	7/A8.02	2/A8.02	6	0	PANIC HARDWARE
102	A	3'-0" X 7'-0" X 1 3/4"	90	WD	HM	7/A8.02	7/A8.02	2/A8.02	8	0	
103A	F	PR. 6'0" X 8'-0" X 1 3/4"	90	FRP	HM	6/A8.02	6/A8.02	1/A8.02	5	0	STAINLESS STEEL HARDWARE WET RATED AND CHEMICAL RESISTANT, PANIC HARDWARE
103B	H	PR. 6'0" X 8'-0" X 1 3/4"	90	FRP	HM	6/A8.02	6/A8.02	1/A8.02	5	0	STAINLESS STEEL HARDWARE WET RATED AND CHEMICAL RESISTANT, DOOR LOUVER
103C	H	PR. 6'0" X 8'-0" X 1 3/4"	90	FRP	HM	6/A8.02	6/A8.02	1/A8.02	5	0	STAINLESS STEEL HARDWARE WET RATED AND CHEMICAL RESISTANT, PANIC HARDWARE, DOOR LOUVER
103D	H	PR. 6'0" X 8'-0" X 1 3/4"	90	FRP	HM	6/A8.02	6/A8.02	1/A8.02	5	0	STAINLESS STEEL HARDWARE WET RATED AND CHEMICAL RESISTANT, PANIC HARDWARE, DOOR LOUVER
104	K	3'-0" X 7'-0" X 1 3/4"	90	FRP	HM	7/A8.02	7/A8.02	2/A8.02	8	0	STAINLESS STEEL HARDWARE WET RATED AND CHEMICAL RESISTANT
105	A	3'-0" X 7'-0" X 1 3/4"	90	WD	HM	7/A8.02	7/A8.02	2/A8.02	8	0	
106	A	3'-0" X 7'-0" X 1 3/4"	90	WD	HM	7/A8.02	7/A8.02	2/A8.02	13	0	
107	A	3'-0" X 7'-0" X 1 3/4"	90	WD	HM	7/A8.02	7/A8.02	2/A8.02	10	0	
108A	A	3'-0" X 7'-0" X 1 3/4"	90	HM	HM	7/A8.02	7/A8.02	2/A8.02	6.2	90	PANIC HARDWARE
108B	I	3'-0" X 7'-0" X 1 3/4"	90	HM	HM	6/A8.02	6/A8.02	1/A8.02	2	0	INSUL, PANIC HARDWARE, DOOR LOUVER PER MECH.
109	A	3'-0" X 7'-0" X 1 3/4"	90	WD	HM	7/A8.02	7/A8.02	2/A8.02	11	0	
110	A	3'-0" X 7'-0" X 1 3/4"	90	WD	HM	7/A8.02	7/A8.02	2/A8.02	14	0	
111	A	3'-0" X 7'-0" X 1 3/4"	90	WD	HM	7/A8.02	7/A8.02	2/A8.02	14	0	
118	A	3'-0" X 7'-0" X 1 3/4"	90	WD	HM	7/A8.02	7/A8.02	2/A8.02	6	0	PANIC HARDWARE
119	B	3'-0" X 7'-0" X 1 3/4"	90	WD	HM	7/A8.02	7/A8.02	2/A8.02	6.1	0	PANIC HARDWARE, DOOR LOUVER PER MECH
120	A	3'-0" X 7'-0" X 1 3/4"	90	WD	HM	7/A8.02	7/A8.02	2/A8.02	14	0	
121	A	3'-0" X 7'-0" X 1 3/4"	90	WD	HM	7/A8.02	7/A8.02	2/A8.02	14	0	
122A	J	PR. 6'0" X 8'-0" X 1 3/4"	90	TG	ALUM	5/A8.02	3/A8.02	1/A8.02	1	0	INSUL, PANIC HARDWARE
122B	L	22'-10" X 8'-2" X 2 3/4"	90	TG	ALUM				15	0	HEAD, JAMB, THRESHOLD, AND HARDWARE PER MANUFACTURER
122C	D	3'-0" X 7'-0" X 1 3/4"	90	WD	HM	7/A8.02	7/A8.02	2/A8.02	6	0	PANIC HARDWARE
122D	E	PR. 6'0" X 8'-0" X 1 3/4"	90	WD	HM	7/A8.02	7/A8.02	2/A8.02	7	0	
122E	E	PR. 6'0" X 8'-0" X 1 3/4"	90	WD	HM	7/A8.02	7/A8.02	2/A8.02	7	0	
122F	A	3'-0" X 7'-0" X 1 3/4"	90	WD	HM	7/A8.02	7/A8.02	2/A8.02	12	0	
123	D	3'-0" X 7'-0" X 1 3/4"	90	HM	HM	6/A8.02	6/A8.02	1/A8.02	3	0	INSUL
124	B	3'-0" X 7'-0" X 1 3/4"	90	WD	HM	7/A8.02	7/A8.02	2/A8.02	13	0	DOOR LOUVER PER MECH
125	C	3'-0" X 7'-0" X 1 3/4"	90	HM	HM	6/A8.02	6/A8.02	1/A8.02	4	0	INSUL
126	C	3'-0" X 7'-0" X 1 3/4"	90	HM	HM	6/A8.02	6/A8.02	1/A8.02	4	0	INSUL
127	G	PR. 6'0" X 8'-0" X 1 3/4"	90	HM	HM	6/A8.02	6/A8.02	1/A8.02	1	0	INSUL, PANIC HARDWARE, DOOR LOUVER PER MECH
128	C	3'-0" X 7'-0" X 1 3/4"	90	HM	HM	6/A8.02	6/A8.02	1/A8.02	4	0	DOOR LOUVER PER MECH
129	C	3'-0" X 7'-0" X 1 3/4"	90	HM	HM	6/A8.02	6/A8.02	1/A8.02	4	0	DOOR LOUVER PER MECH
130	C	3'-0" X 7'-0" X 1 3/4"	90	HM	HM	6/A8.02	6/A8.02	1/A8.02	4	0	DOOR LOUVER PER MECH
131	C	3'-0" X 7'-0" X 1 3/4"	90	HM	HM	6/A8.02	6/A8.02	1/A8.02	4	0	DOOR LOUVER PER MECH

INTERIOR FINISH SCHEDULE

ROOM NUMBER	ROOM NAME	FINISH MATERIALS FLOOR	FINISH MATERIALS BASE	FINISH MATERIALS WALLS N	FINISH MATERIALS WALLS E	FINISH MATERIALS WALLS S	FINISH MATERIALS WALLS W	FINISH MATERIALS CEILING	PAINTING WALLS N	PAINTING WALLS E	PAINTING WALLS S	PAINTING WALLS W	PAINTING CEILING SOFFIT	PAINTING METAL DOOR	PAINTING WOOD DOOR	PAINTING METAL FRAME	PAINTING WOOD TRIM	PAINTING CASEWORK	REMARKS
101	ENTRY/ RECEPTION	F2	B1	W2 / W3	W2 / W3	W2 / W3	W1 / W3	C1	-/●	-/●	-/●	-/●	●						
102	ADMINISTRATION OFFICE	F2	B1	W3	W3	W1 / W3	W3	C1	●	●	-/●	●	●		●	●			
103	POOL MECHANICAL EQUIPMENT ROOM	F3	-	W1	W1	W1	W1 / W3	C1				-/●		●		●			
103.A	CHLORINE STORAGE ROOM	F3	-	W1	W1	W1	W1	C2						●		●			
103.B	ACID STROAGE ROOM	F3	-	W1	W1	W1	W1	C2						●		●			
104	FIRE SPRINKLER RISER ROOM	F3	-	W3	W3	W1 / W3	W1 / W3	C1			-/●	-/●		●		●			
105	SICK BAY	F2	B1	W3	W3	W1	W1	C1	●	●			●		●	●		●	
106	LIFE GUARD FACILITIES	F2	B1	W3	W3	W1	W3	C1	●	●			●		●	●		●	
107	MDF ROOM	F3	B1	W3	W3	W1	W1	C2	●	●				●		●			
108	ELECTRICAL ROOM	F3	B1	W1	W3	W3	W1	C2		●	●			●		●			
109	JANITORIAL	F3	B1	W1	W3	W3	W3	C2		●	●	●			●	●			
110	ALL GENDER RESTROOM	F4	B2	W4	W4	W4	W4	C1					●		●	●			
111	SHOWER ROOM	F4	B2	W4	W4	W4	W4	C1					●		●	●			
112	MALE LOCKER ROOM	F3	B2	W4	W4	W4	W4	C1					●	●		●			
113	MALE RESTROOM	F4	B2	W4	W4	W4	W4	C1					●	●		●			
114	MALE SHOWER ROOM	F4	B2	W4	W4	W4	W4	C1					●						
115	FEMALE SHOWER ROOM	F4	B2	W4	W4	W4	W4	C1					●						
116	FEMALE RESTROOM	F4	B2	W4	W4	W4	W4	C1					●						
117	FEMALE LOCKER ROOM	F3	B2	W4	W4	W4	W4	C1					●						
118	CONCESSIONS	F5	B3	W6	W6	W6	W6	C1					●		●	●			
119	SERVICE KITCHEN	F5	B3	W6	W6 / W7	W6 / W7	W6	C1					●		●	●			SEE INTERIOR ELEVATION FOR PLACEMENT OF SS WALL FLASHING
120	ALL GENDER RESTROOM	F4	B2	W4	W4	W4	W4	C1					●		●	●			
121	ALL GENDER RESTROOM	F4	B2	W4	W4	W4	W4	C1					●		●	●			
122	COMMUNITY ROOM	F1	B1	W1 / W3	W2 / W3	W3	W1	C1	●	-/●	●		●		●	●			
122A	STORAGE CLOSET	F1	B1	W1	W1	W3	W1	C1			●		●		●	●			
122B	STORAGE CLOSET	F1	B1	W1	W1	W3	W3	C1			●	●							
123	CORRIDOR	F1	B1	W3	W3	W3	W1	C1	●	●	●		●	●	●	●			
124	CORRIDOR	F1	B1	W3	W3	W3	W1	C1	●	●	●		●	●	●	●			
125	VESTIBULE	F3	B2	W1	W1	W4	W4	C1			●	●	●		●				
126	VESTIBULE	F3	B2	W4	W1	W1	W4	C1	●			●	●		●				
127	MALE VANITY ROOM	F3	B2	W4	W4	W1	W4	C1					●	●		●			
128	FEMALE VANITY ROOM	F3	B2	W4	W4	W4	W4	C1					●	●		●			
129	HALLWAY	F1	B1	W1	W3	W3	W3	C1		●	●	●	●		●	●			
130	ALL GENDER RESTROOM	F3	B2	W4	W4	W4	W4	C1					●	●		●			
131	ALL GENDER RESTROOM	F3	B2	W4	W4	W4	W4	C1					●	●		●			
132	ALL GENDER RESTROOM	F3	B2	W4	W4	W4	W4	C1					●	●		●			
133	ALL GENDER RESTROOM	F3	B2	W4	W4	W4	W4	C1					●	●		●			
134	POOL EQUIPMENT STORAGE	F3	B1	W1	W1	W3	W1	C2			●								

DOOR TYPES

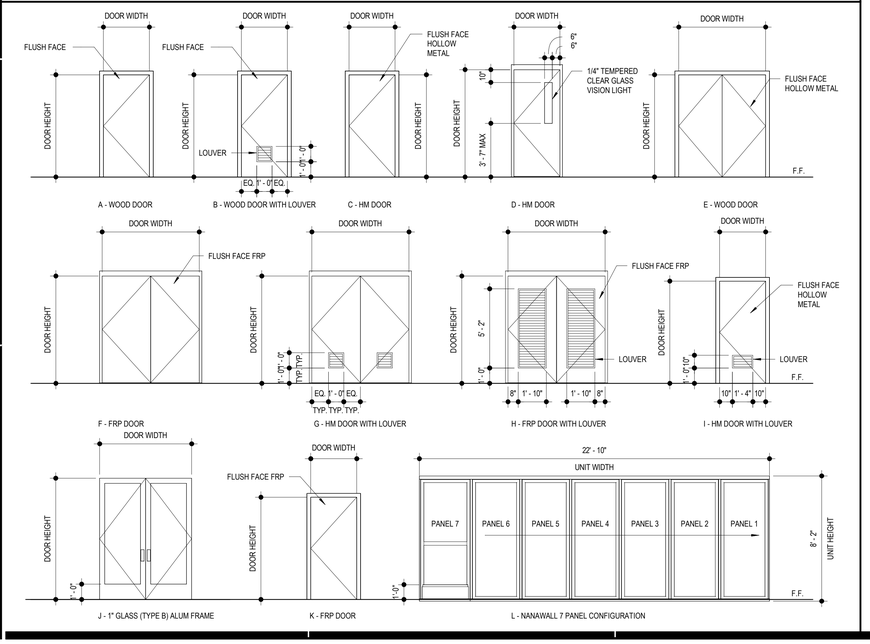

WINDOW SCHEDULE

WINDOW NO.	WINDOW TYPE	WINDOW SIZE	GLASS THK.	GLASS TYPE	FRAME MAT'L	FRAME FINISH	DETAILS HEAD	DETAILS JAMB	DETAILS SILL	FIRE RATING (MINUTES)	REMARKS
01	W1	SEE WINDOW TYPE	1"	TG	ALUM	ANODIZED	4/A8.02	12&16/A8.02	13/A8.02	0	
02	W5	SEE WINDOW TYPE	1"	TG	ALUM	ANODIZED	4/A8.02	16/A8.02	13/A8.02	0	
03	W6	SEE WINDOW TYPE	1"	TG	ALUM	ANODIZED	4/A8.02	16/A8.02	13/A8.02	0	
04	W7	SEE WINDOW TYPE	1"	TG	ALUM	ANODIZED	5/A8.02	3/A8.02	13/A8.02	0	
05	W2	SEE WINDOW TYPE	1"	TG	ALUM	ANODIZED	5/A8.02	3/A8.02	13/A8.02	0	
06	W9	4'-0" X 3'-0"	1"	TG	ALUM	ANODIZED	10/A8.02	10/A8.02	11/A8.02	0	CORNER WINDOW
07	W9	4'-0" X 3'-0"	1"	TG	ALUM	ANODIZED	10/A8.02	10/A8.02	11/A8.02	0	CORNER WINDOW
08	W8	3'-7" X 6'-8"	1"	TG	ALUM	ANODIZED	15/A8.09	8/A8.09	15/A8.09	0	
09	W3	SEE WINDOW TYPE	1"	TG	ALUM	ANODIZED	5/A8.02	3/A8.02	11/A8.02	0	
10	W4	2'-8" X 6'-0"	1"	TG	ALUM	ANODIZED	9/A8.02	9/A8.02	8/A8.02	0	
11	W4	2'-8" X 6'-0"	1"	TG	ALUM	ANODIZED	9/A8.02	9/A8.02	8/A8.02	0	
12	W4	2'-8" X 6'-0"	1"	TG	ALUM	ANODIZED	9/A8.02	9/A8.02	8/A8.02	0	

WINDOW TYPES

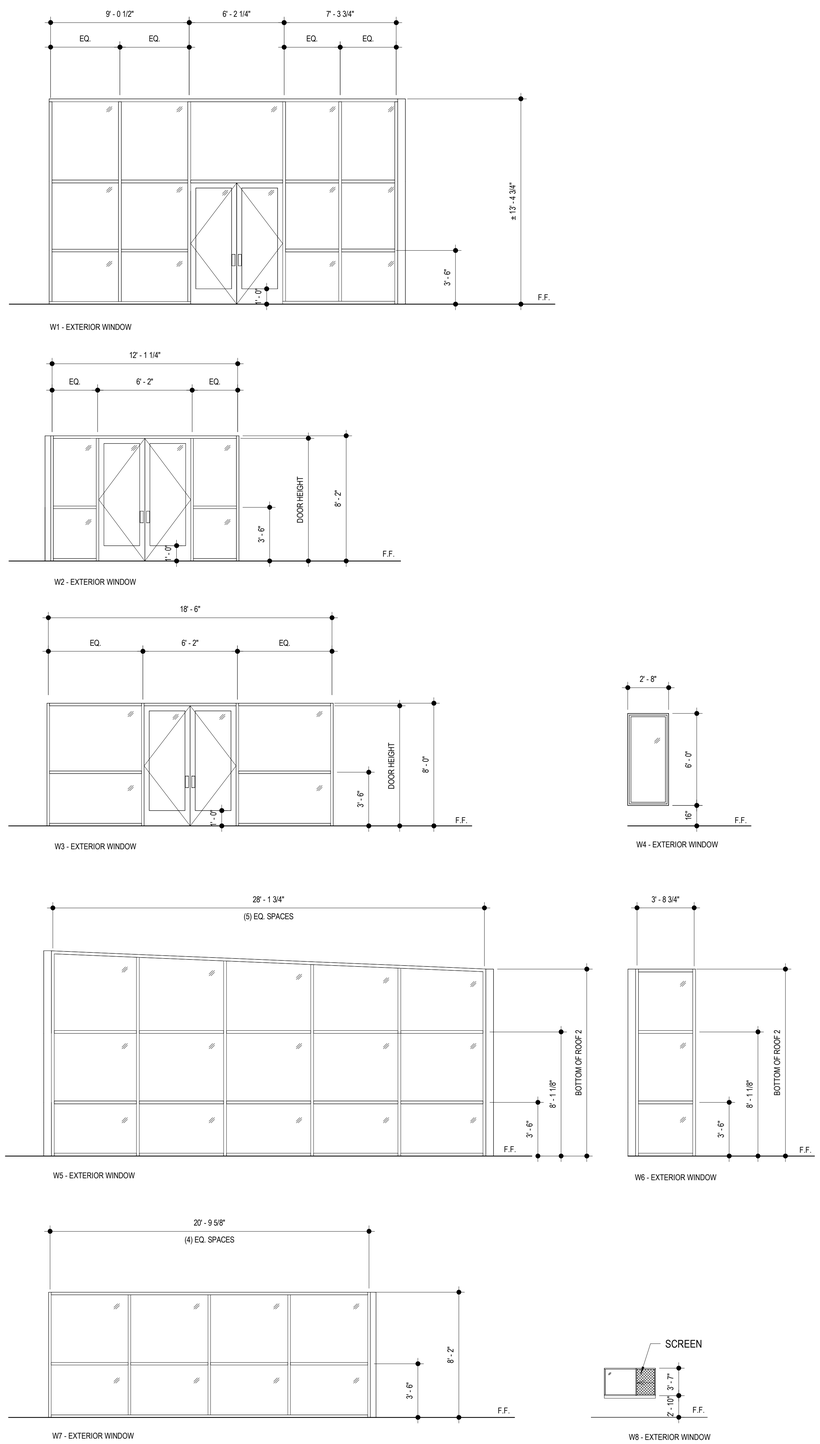

DOOR NOTES

1. ALL BUILDING EXIT DOORS AND GATES IN EXIT PATHWAYS, INCLUDING BUT NOT LIMITED TO DOORS OF TOILETS AND STORAGE ROOMS, SHALL CONFORM WITH THE REQUIREMENTS OF TITLE 24, CCR.

2. ALL EXIT DOORS SHALL BE OPENABLE FROM THE INSIDE WITHOUT THE USE OF A KEY OR SPECIAL KNOWLEDGE OR EFFORT AND SHALL BE ACCESSIBLE BY THE DISABLED. PROVIDE PANIC HARDWARE AT ALL EXITS AND EXIT WAYS, AS PER THE SPECIFICATION HARDWARE SCHEDULE.

3. ALL EXIT DOORS SERVING AN OCCUPANT LOAD OF 10 OR MORE, ALONG THE PATH OF EXIT TRAVEL ANYWHERE IN A MEANS OF EGRESS SYSTEM SHALL COMPLY WITH THE REQUIREMENTS OF TITLE 24, CCR.

4. EXIT DOORS SHALL BE OF THE PIVOTED, BALANCED OR SIDE-HINGED SWINGING TYPE. REVOLVING, SLIDING AND OVERHEAD DOORS SHALL NOT BE USED AS REQUIRED EXIT DOORS.

5. ALL EXIT DOORS SHALL BE NOT LESS THAN 3 FT. WIDE, 6'-8" HIGH, SHALL HAVE A CLEAR EXIT WAY WIDTH OF NOT LESS THAN 32", AND SHALL BE CAPABLE OF OPENING 90 DEGREES. THE MAXIMUM DOOR LEAF WIDTH IS 4'-0" WHEN SERVING AN OCCUPANT LOAD OF 10 OR MORE.

6. MAXIMUM EFFORT TO OPERATE DOORS SHALL NOT EXCEED 5 LBS. AT ALL EXTERIOR, INTERIOR, AND FIRE DOORS.

7. PANIC HARDWARE SHALL BE PROVIDED ON EXIT DOORS HANDLING AN OCCUPANT CAPACITY OF 50 OR MORE PERSONS, FROM ANY GROUP A, E, OR I OCCUPANCY; AND FOR H 1, 2, 3, 6, 7, 8 OCCUPANCY AND SOUND STAGES. ONLY PANIC HARDWARE APPROVED AND LISTED BY THE STATE FIRE MARSHALL SHALL BE INSTALLED.

8. IN ALL DOORS, HAND ACTIVATED DOOR OPENING HARDWARE SHALL BE CENTERED BETWEEN 34 AND 44 INCHES ABOVE THE FLOOR.

9. ALL PIN-TYPE DOOR HINGES ACCESSIBLE FROM OUTSIDE SHALL HAVE NON-REMOVABLE HINGE PINS. HINGES SHALL HAVE MIN. 1/4" DIA. STEEL JAMB STUD WITH 1/4" MIN. PROTECTION. THE STRIKE PLATE FOR LATCHES AND HOLDING DEVICE FOR PROJECTING DEAD BOLTS IN WOOD CONSTRUCTION SHALL BE SECURED TO THE JAMB AND THE WALL FRAMING WITH SCREWS NO LESS THAN 2-1/2" LONG.

10. DEAD BOLTS SHALL HAVE HARDENED INSERTS. DEADLOCKING LATCH WITH KEY-OPERATED LOCKS SHALL BE PROVIDED AT EXTERIOR DOORS. LOCKS MUST BE OPENABLE FROM INSIDE WITHOUT KEY, SPECIAL KNOWLEDGE OR SPECIAL EFFORT (LATCH NOT REQUIRED IN B, F, AND S OCCUPANCIES).

11. STRAIGHT DEAD BOLTS SHALL HAVE A MIN. THROW OF 1" AND AN EMBEDMENT OF NOT LESS THAN 5/8". A HOOK-SHAPED OR AN EXPANDING-LUG DEADBOLT SHALL HAVE A MINIMUM THROW OF 3/4".

12. WOOD PANEL TYPE DOORS MUST HAVE PANELS AT LEAST 9/16 IN. THICK WITH SHAPED PORTIONS NOT LESS THAN 1/4 IN. THICK AND INDIVIDUAL PANELS MUST BE NO MORE 300 SQ. IN. IN AREA. MULLIONS SHALL BE CONSIDERED A PART OF ADJACENT PANELS EXCEPT MULLIONS NOT OVER 18 INCHES LONG MAY HAVE AN OVERALL WIDTH OF NOT LESS THAN 2 INCHES. STILES AND RAILS SHALL BE OF SOLID LUMBER IN THICKNESS WITH OVERALL DIMENSIONS OF NOT LESS THAN 1 3/8 INCHES AND 3 INCHES IN WIDTH.

13. GLAZED OPENINGS WITHIN 40" OF THE DOOR LOCK WHEN THE DOOR IS IN THE CLOSED POSITION, SHALL BE FULLY TEMPERED GLASS OR APPROVED BURGLARY RESISTANT MATERIAL, OR SHALL BE PROTECTED BY METAL BARS, SCREENS OR GRILLS HAVING A MAXIMUM OPENING OF 2". THE PROVISIONS OF THIS SECTION SHALL NOT APPLY TO VIEW PORTS OR WINDOWS WHICH DO NOT EXCEED 2" IN THEIR GREATEST DIMENSIONS.

14. MAXIMUM HEIGHT OF THRESHOLD SHALL BE 1/2" WITH A MAXIMUM BEVEL OF 45 DEGREES. CHANGE IN LEVEL BETWEEN 1/4" AND 1/2" SHALL BE BEVELED WITH A SLOPE NO GREATER THAN 1:2.

15. THERE SHALL BE A LEVEL AND CLEAR FLOOR OR LANDING ON EACH SIDE OF THE DOOR. THE LEVEL AREA SHALL HAVE A LENGTH IN THE DIRECTION OF DOOR SWING OF AT LEAST 60" AND THE LENGTH OPPOSITE THE DIRECTION OF THE DOOR SWING OF 48" AS MEASURED AT RIGHT ANGLES TO THE PLANE OF THE DOOR IN THE CLOSED POSITION.

16. THE WIDTH OF THE LEVEL AREA ON THE SIDE TO WHICH THE DOOR SWINGS SHALL EXTEND 24" PAST THE STRIKE EDGE OF THE DOOR FOR EXTERIOR DOORS AND 18" PAST THE STRIKE EDGE FOR INTERIOR DOORS.

17. PROVIDE CLEAR SPACE OF 12" PAST STRIKE EDGE OF THE DOOR ON THE OPPOSITE SIDE TO WHICH THE DOOR SWINGS IF THE DOOR IS EQUIPPED WITH BOTH A LATCH AND A CLOSER ON THE PUSH SIDE OF THE DOOR.

18. THE FLOOR OR LANDING SHALL BE NOT MORE THAN 1/2" LOWER THAN THE THRESHOLD OF THE DOORWAY.

19. ALL MEANS OF EGRESS SHALL COMPLY WITH CBC CHAPTER 10.

WINDOW NOTES

1. GLASS: ALL GLASS TO BE FULLY TEMPERED.

2. GLAZING SEALANT: SILICONE, COMPATIBLE WITH ADJACENT MATERIALS.

3. TYPE B: 1" THICK INSULATED ASSEMBLY CONSISTING OF 1/4" THICK, TEMPERED CLEAR SOLARBAN 60 SOLAR CONTROL LOW-E GLASS BY PPG, 1/2" ARGON GAS SPACE, AND TYPE "A" GLASS FOR THE INTERIOR LITE. GLASS SHALL PROVIDE A VISIBLE LIGHT TRANSMITTANCE OF 70 PERCENT AND A SHADING COEFFICIENT OF .44.

4. EACH LIGHT SHALL BEAR THE MANUFACTURER'S LABEL DESIGNATING THE TYPE AND THICKNESS OF GLASS. WHEN APPROVED BY THE ENFORCEMENT AGENCY, LABELS MAY BE OMITTED FROM OTHER THAN SAFETY GLAZING MATERIALS, PROVIDED AN AFFIDAVIT IS FURNISHED BY THE GLAZING CONTRACTOR CERTIFYING THAT EACH LIGHT IS GLAZED IN ACCORDANCE WITH APPROVED PLANS AND SPECIFICATIONS.

5. EACH LIGHT OF SAFETY GLAZING MATERIAL INSTALLED IN HAZARDOUS LOCATIONS AS DEFINED IN SECTION 2406.4 SHALL BE IDENTIFIED BY A PERMANENT LABEL THAT SPECIFIES THE LABELER, WHETHER THE MANUFACTURER OF INSTALLER, AND STATE THAT SAFETY GLAZING MATERIAL HAS BEEN UTILIZED IN SUCH INSTALLATION. THE IDENTIFICATION SHALL BE ETCHED OR CERAMIC FIRED ON THE GLASS AND READABLE FROM THE INSIDE OF THE BUILDING AFTER INSTALLATION.

6. EACH UNIT OF TEMPERED GLASS SHALL BE PERMANENTLY IDENTIFIED BY THE MANUFACTURER. THE IDENTIFICATION SHALL BE ETCHED OR CERAMIC FIRED ON THE GLASS AND BE VISIBLE WHEN THE UNIT IS GLAZED.

7. SEE STRUCTURAL DRAWINGS FOR HEADER INFORMATION.

INTERIOR FINISH NOTES

1. ALL SURFACES WITHOUT A FACTORY FINISH SHALL BE PAINTED.

2. ALL FLOOR FINISHES THAT TERMINATE AT A DOOR OPENING SHALL JOIN ADJACENT FINISHES AT THE CINTERLINE OF DOOR AND / OR TERMINATE BELOW THRESHOLD WHERE OCCURS.

3. ALL GYPSUM BOARD SHALL BE TYPE 'X'.

4. REFER TO INTERIOR ELEVATION FOR ADDITIONAL INFORMATION.

5. CERAMIC TILE COVE BASE SHALL MINIMUM 3/8" RADIUS.

6. WALL, CEILING AND FLOOR FINISHES SHALL COMPLY WITH CBC SECTION 803 AND 804.

7. REFER TO PROJECT SPECIFICATIONS FOR ADDITIONAL INFORMATION.

LEGEND

FLOORING:

LUXURY VINYL TILE (LVT)	F1
SEALED AND POLISHED CONCRETE	F2
SEALED CONCRETE	F3
CERAMIC TILE	F4
QUARRY TILE	F5

WALL:

EXPOSED CMU WALL	W1
STOREFRONT	W2
GYPSUM BOARD	W3
CERAMIC TILE O/ BASE WALL	W4
"SMOOTH" FIBER REINFORCED PANEL	W5
FIBERGLASS REINFORCED PANEL	W6
STAINLESS STEEL WALL PANEL	W7

BASE:

"STRAIGHT" RUBBER TOPSET	B1
CERAMIC TILE COVE	B2
QUARRY TILE COVE	B3

CEILING:

SUSPENED GYPSUM BOARD	C1
EXPOSED STRUCTURE	C2

AGENCY

REVIEWED FOR CODE COMPLIANCE BY: WILLDAN ENGINEERING

Approval of these plans & specifications shall not be construed to be a permit for, or an approval of any violation of any Federal, State, County or City laws or ordinances. One set of approved plans must be kept on the job until completion.

9:24:24 AM Jul 21, 2025

FLEWELLING & MOODY
architecture planning interiors

HEADQUARTERS OFFICE:
99 S. Lake Avenue, Suite 300
Pasadena, CA 91101
Phone: 323.543.8300
E-Mail: fm-pasadena@flewelling-moody.com

ANTELOPE VALLEY OFFICE:
1035 West Lancaster Boulevard
Lancaster, California 93534
Phone: 661.949.0771
E-Mail: fm-lancaster@flewelling-moody.com

An Employee Owned Corporation

ARCHITECT

LICENSED ARCHITECT SCOTT T. GABBARD C-14211 06/30/2026 STATE OF CALIFORNIA

CONSULTANT

Drawn by: Author
Check by: Checker

Revisions

No.	Date	Description

All dimensions must be checked at the job by the contractor who accepts full responsibility for their accuracy under the contract. These plans & the specifications in connection therewith have been prepared for a specific site. Any and all responsibility for their use in whole or in part on any other site is hereby disclaimed by Flewelling & Moody.

CITY OF RIDGECREST

SGT. JOHN PINNEY MEMORIAL POOL REPLACEMENT PROJECT

205 S WARNER ST, RIDGECREST, CA 93555

Drawing Title

DOOR, WINDOW & INTERIOR FINISH SCHEDULES

Job No. 3055-0100

Sheet No. **A7.01**

Date 07/14/2025

DOOR SCHEDULE ALT 6

DOOR NO	DOOR TYPE	DOOR SIZE	SWING	MAT'L	FRAME MAT'L	DETAILS HEAD	DETAILS JAMB	DETAILS THRESHOLD	HDWR SET	FIRE RATING (MINUTES)	REMARKS
101A	J	PR. 6'-0" X 8'-0" X 1 3/4"	90	TG	ALUM	4/A8.02			1.0	0.0 s	INSUL, PANIC HARDWARE
101B	J	PR. 6'-0" X 8'-0" X 1 3/4"	90	TG	ALUM	5/A8.02	3/A8.02	1/A8.02	1.0	0.0 s	INSUL
101C	D	3'-0" X 7'-0" X 1 3/4"	90	WD	HM	3/A8.02	3/A8.02	2/A8.02	6.0	0.0 s	PANIC HARDWARE
102	A	3'-0" X 7'-0" X 1 3/4"	90	WD	HM	7/A8.02	7/A8.02	2/A8.02	8.0	0.0 s	
103A	F	PR. 6'-0" X 8'-0" X 1 3/4"	90	FRP	HM	6/A8.02	6/A8.02	1/A8.02	5.0	0.0 s	STAINLESS STEEL HARDWARE WET RATED AND CHEMICAL RESISTANT, PANIC HARDWARE
103B	H	PR. 6'-0" X 8'-0" X 1 3/4"	90	FRP	HM	6/A8.02	6/A8.02	1/A8.02	5.0	0.0 s	STAINLESS STEEL HARDWARE WET RATED AND CHEMICAL RESISTANT, DOOR LOUVER
103C	H	PR. 6'-0" X 8'-0" X 1 3/4"	90	FRP	HM	6/A8.02	6/A8.02	1/A8.02	5.0	0.0 s	STAINLESS STEEL HARDWARE WET RATED AND CHEMICAL RESISTANT, PANIC HARDWARE, DOOR LOUVER
103D	H	PR. 6'-0" X 8'-0" X 1 3/4"	90	FRP	HM	6/A8.02	6/A8.02	1/A8.02	5.0	0.0 s	STAINLESS STEEL HARDWARE WET RATED AND CHEMICAL RESISTANT, PANIC HARDWARE, DOOR LOUVER
104	K	3'-0" X 7'-0" X 1 3/4"	90	FRP	HM	7/A8.02	7/A8.02	2/A8.02	8.0	0.0 s	STAINLESS STEEL HARDWARE WET RATED AND CHEMICAL RESISTANT
105	A	3'-0" X 7'-0" X 1 3/4"	90	WD	HM	7/A8.02	7/A8.02	2/A8.02	8.0	0.0 s	
106	A	3'-0" X 7'-0" X 1 3/4"	90	WD	HM	7/A8.02	7/A8.02	2/A8.02	13.0	0.0 s	
107	A	3'-0" X 7'-0" X 1 3/4"	90	WD	HM	7/A8.02	7/A8.02	2/A8.02	10.0	0.0 s	
108A	A	3'-0" X 7'-0" X 1 3/4"	90	HM	HM	7/A8.02	7/A8.02	2/A8.02	6.2	90.0 s	PANIC HARDWARE
108B	I	3'-0" X 7'-0" X 1 3/4"	90	HM	HM	6/A8.02	6/A8.02	1/A8.02	2.0	0.0 s	INSUL, PANIC HARDWARE, DOOR LOUVER PER MECH.
109	A	3'-0" X 7'-0" X 1 3/4"	90	WD	HM	7/A8.02	7/A8.02	2/A8.02	11.0	0.0 s	
110	A	3'-0" X 7'-0" X 1 3/4"	90	WD	HM	7/A8.02	7/A8.02	2/A8.02	14.0	0.0 s	
111	A	3'-0" X 7'-0" X 1 3/4"	90	WD	HM	7/A8.02	7/A8.02	2/A8.02	14.0	0.0 s	
118	A	3'-0" X 7'-0" X 1 3/4"	90	WD	HM	7/A8.02	7/A8.02	2/A8.02	6.0	0.0 s	PANIC HARDWARE
119	B	3'-0" X 7'-0" X 1 3/4"	90	WD	HM	7/A8.02	7/A8.02	2/A8.02	6.1	0.0 s	INSUL, PANIC HARDWARE, DOOR LOUVER PER MECH.
120	A	3'-0" X 7'-0" X 1 3/4"	90	WD	HM	7/A8.02	7/A8.02	2/A8.02	14.0	0.0 s	
121	A	3'-0" X 7'-0" X 1 3/4"	90	WD	HM	7/A8.02	7/A8.02	2/A8.02	14.0	0.0 s	INSUL, PANIC HARDWARE
123	D	3'-0" X 7'-0" X 1 3/4"	90	HM	HM	6/A8.02	6/A8.02	1/A8.02	3.0	0.0 s	INSUL
124	B	3'-0" X 7'-0" X 1 3/4"	90	WD	HM	7/A8.02	7/A8.02	2/A8.02	13.0	0.0 s	DOOR LOUVER PER MECH
125	C	3'-0" X 7'-0" X 1 3/4"	90	HM	HM	6/A8.02	6/A8.02	1/A8.02	4.0	0.0 s	INSUL
126	C	3'-0" X 7'-0" X 1 3/4"	90	HM	HM	6/A8.02	6/A8.02	1/A8.02	4.0	0.0 s	INSUL
127	G	PR. 6'-0" X 8'-0" X 1 3/4"	90	HM	HM	6/A8.02	6/A8.02	1/A8.02	1.0	0.0 s	INSUL, PANIC HARDWARE, DOOR LOUVER PER MECH.
128	C	3'-0" X 7'-0" X 1 3/4"	90	HM	HM	6/A8.02	6/A8.02	1/A8.02	4.0	0.0 s	DOOR LOUVER PER MECH
129	C	3'-0" X 7'-0" X 1 3/4"	90	HM	HM	6/A8.02	6/A8.02	1/A8.02	4.0	0.0 s	DOOR LOUVER PER MECH
130	C	3'-0" X 7'-0" X 1 3/4"	90	HM	HM	6/A8.02	6/A8.02	1/A8.02	4.0	0.0 s	DOOR LOUVER PER MECH
131	C	3'-0" X 7'-0" X 1 3/4"	90	HM	HM	6/A8.02	6/A8.02	1/A8.02	4.0	0.0 s	DOOR LOUVER PER MECH

INTERIOR FINISH SCHEDULE ALT 6

ROOM NUMBER	ROOM NAME	FINISH MATERIALS: FLOOR	FINISH MATERIALS: BASE	FINISH MATERIALS: WALLS N	FINISH MATERIALS: WALLS E	FINISH MATERIALS: WALLS S	FINISH MATERIALS: WALLS W	FINISH MATERIALS: CEILING	PAINTING: WALLS N	PAINTING: WALLS E	PAINTING: WALLS S	PAINTING: WALLS W	PAINTING: CEILING SOFFIT	PAINTING: WOOD DOOR	PAINTING: METAL FRAME	PAINTING: WOOD TRIM	PAINTING: CASEWORK	REMARKS
101	ENTRY/ RECEPTION	F2	B1	W2 / W3	W2 / W3	W2 / W3	W1 / W3	C1	-/●	-/●	-/●	-/●	●			●		
102	ADMINISTRATION OFFICE	F2	B1	W3	W3	W1 / W3	W3	C1	●	●	-/●	●	●		●	●		
103	POOL MECHANICAL EQUIPMENT ROOM	F3	-	W1	W1	W1	W1 / W3	C1				-/●		●		●		
103.A	CHLORINE STORAGE ROOM	F3	-	W1	W1	W1	W1	C2						●		●		
103.B	ACID STROAGE ROOM	F3	-	W1	W1	W1	W1	C2						●		●		
104	FIRE SPRINKLER RISER ROOM	F3	-	W3	W3	W1 / W3	W1 / W3	C1			-/●	-/●		●		●		
105	SICK BAY	F2	B1	W3	W3	W1	W1	C1	●	●			●		●	●	●	
106	LIFE GUARD FACILITIES	F2	B1	W3	W3	W1	W3	C1	●	●			●		●	●	●	
107	MDF ROOM	F3	B1	W3	W3	W1	W1	C2	●	●				●		●		
108	ELECTRICAL ROOM	F3	B1	W1	W3	W3	W1	C2		●	●			●		●		
109	JANITORIAL	F3	B1	W1	W3	W3	W3	C2		●	●	●			●	●		
110	ALL GENDER RESTROOM	F4	B2	W4	W4	W4	W4	C1					●		●	●		
111	SHOWER ROOM	F4	B2	W4	W4	W4	W4	C1					●		●	●		
112	MALE LOCKER ROOM	F3	B2	W4	W4	W4	W4	C1					●	●		●		
113	MALE RESTROOM	F4	B2	W4	W4	W4	W4	C1					●	●		●		
114	MALE SHOWER ROOM	F4	B2	W4	W4	W4	W4	C1					●					
115	FEMALE SHOWER ROOM	F4	B2	W4	W4	W4	W4	C1					●					
116	FEMALE RESTROOM	F4	B2	W4	W4	W4	W4	C1					●					
117	FEMALE LOCKER ROOM	F3	B2	W4	W4	W4	W4	C1					●					
118	CONCESSIONS	F5	B3	W6	W6	W6	W6	C1					●		●	●		
119	SERVICE KITCHEN	F5	B3	W6	W6 / W7	W6 / W7	W6	C1					●		●	●		SEE INTERIOR ELEVATION FOR PLACEMENT OF SS WALL FLASHING
120	ALL GENDER RESTROOM	F4	B2	W4	W4	W4	W4	C1					●		●	●		
121	ALL GENDER RESTROOM	F4	B2	W4	W4	W4	W4	C1					●		●	●		
123	CORRIDOR	F1	B1	W3	W3	W3	W1	C1	●	●	●		●	●	●	●		
124	CORRIDOR	F1	B1	W3	W3	W3	W1	C1	●	●	●		●	●	●	●		
125	VESTIBULE	F3	B2	W1	W1	W4	W4	C1			●	●	●	●	●	●		
126	VESTIBULE	F3	B2	W4	W1	W1	W4	C1	●			●	●	●	●	●		
127	MALE VANITY ROOM	F3	B2	W4	W4	W1	W4	C1					●	●	●	●		
128	FEMALE VANITY ROOM	F3	B2	W4	W4	W4	W4	C1					●	●		●		
129	HALLWAY	F1	B1	W1	W3	W3	W3	C1		●	●	●			●	●		
130	ALL GENDER RESTROOM	F3	B2	W4	W4	W4	W4	C1					●	●		●		
131	ALL GENDER RESTROOM	F3	B2	W4	W4	W4	W4	C1					●	●		●		
132	ALL GENDER RESTROOM	F3	B2	W4	W4	W4	W4	C1					●	●		●		
133	ALL GENDER RESTROOM	F3	B2	W4	W4	W4	W4	C1					●	●		●		
134	POOL EQUIPMENT STORAGE	F3	B1	W1	W1	W3	W1	C2				●						

DOOR TYPES

WINDOW SCHEDULE ALT 6

WINDOW NO.	WINDOW TYPE	WINDOW SIZE	GLASS THK.	FRAME TYPE	FRAME MAT'L	FRAME FINISH	DETAILS HEAD	DETAILS JAMB	DETAILS SILL	FIRE RATING (MINUTES)	REMARKS
01	W1	SEE WINDOW TYPE	1"	TG	ALUM	ANODIZED	4/A8.02	12&16/A8.02	13/A8.02	0	
02	W5	SEE WINDOW TYPE	1"	TG	ALUM	ANODIZED	4/A8.02	16/A8.02	13/A8.02	0	
06	W9	4'-0" X 3'-0"	1"	TG	ALUM	ANODIZED	10/A8.02	10/A8.02	11/A8.02	0	CORNER WINDOW
07	W9	4'-0" X 3'-0"	1"	TG	ALUM	ANODIZED	10/A8.02	10/A8.02	11/A8.02	0	CORNER WINDOW
08	W8	3'-7" X 6'-8"	1"	TG	ALUM	ANODIZED	15/A8.09	8/A8.09	15/A8.09	0	

WINDOW TYPES

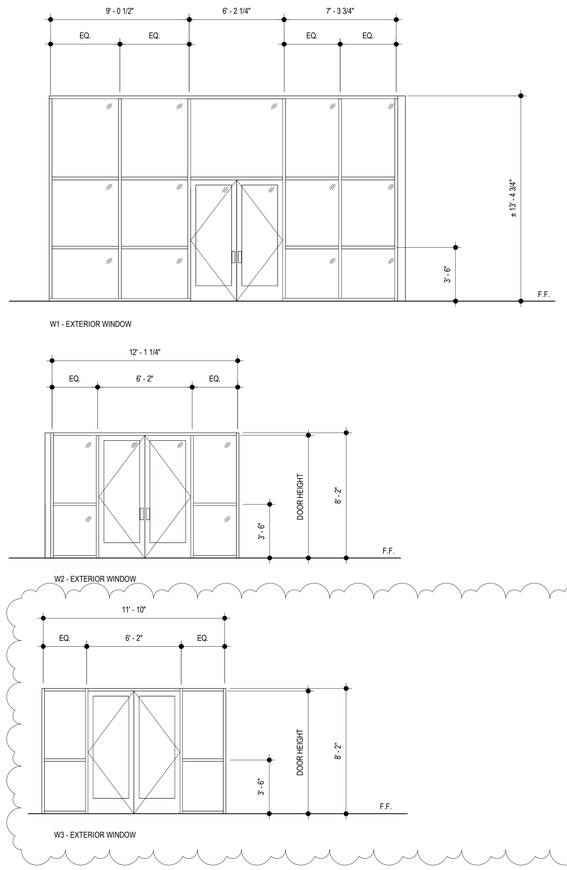

DOOR NOTES

1. ALL BUILDING EXIT DOORS AND GATES IN EXIT PATHWAYS, INCLUDING BUT NOT LIMITED TO DOORS OF TOILETS AND STORAGE ROOMS, SHALL CONFORM WITH THE REQUIREMENTS OF TITLE 24, CCR.

2. ALL EXIT DOORS SHALL BE OPENABLE FROM THE INSIDE WITHOUT THE USE OF A KEY OR SPECIAL KNOWLEDGE OR EFFORT AND SHALL BE ACCESSIBLE BY THE DISABLED. PROVIDE PANIC HARDWARE AT ALL EXITS AND EXIT WAYS, AS PER THE SPECIFICATION HARDWARE SCHEDULE.

3. ALL EXIT DOORS SERVING AN OCCUPANT LOAD OF 10 OR MORE, ALONG THE PATH OF EXIT TRAVEL ANYWHERE IN A MEANS OF EGRESS SYSTEM SHALL COMPLY WITH THE REQUIREMENTS OF TITLE 24, CCR.

4. EXIT DOORS SHALL BE OF THE PIVOTED, BALANCED OR SIDE-HINGED SWINGING TYPE. REVOLVING, SLIDING AND OVERHEAD DOORS SHALL NOT BE USED AS REQUIRED EXIT DOORS.

5. ALL EXIT DOORS SHALL BE NOT LESS THAN 3 FT. WIDE, 6'-8" HIGH, SHALL HAVE A CLEAR EXIT WAY WIDTH OF NOT LESS THAN 32", AND SHALL BE CAPABLE OF OPENING 90 DEGREES. THE MAXIMUM DOOR LEAF WIDTH IS 4'-0" WHEN SERVING AN OCCUPANT LOAD OF 10 OR MORE.

6. MAXIMUM EFFORT TO OPERATE DOORS SHALL NOT EXCEED 5 LBS. AT ALL EXTERIOR, INTERIOR, AND FIRE DOORS.

7. PANIC HARDWARE SHALL BE PROVIDED ON EXIT DOORS HANDLING AN OCCUPANT CAPACITY OF 50 OR MORE PERSONS, FROM ANY GROUP A, E, OR I OCCUPANCY; AND FOR H 1, 2, 3, 6, 7, 8 OCCUPANCY AND SOUND STAGES. ONLY PANIC HARDWARE APPROVED AND LISTED BY THE STATE FIRE MARSHALL SHALL BE INSTALLED.

8. IN ALL DOORS, HAND ACTIVATED DOOR OPENING HARDWARE SHALL BE CENTERED BETWEEN 34 AND 44 INCHES ABOVE THE FLOOR.

9. ALL PIN-TYPE DOOR HINGES ACCESSIBLE FROM OUTSIDE SHALL HAVE NON-REMOVABLE HINGE PINS. HINGES SHALL HAVE MIN. 1/4" DIA. STEEL JAMB STUD WITH 1/4" MIN. PROTECTION. THE STRIKE PLATE FOR LATCHES AND HOLDING DEVICE FOR PROJECTING DEAD BOLTS IN WOOD CONSTRUCTION SHALL BE SECURED TO THE JAMB AND THE WALL FRAMING WITH SCREWS NO LESS THAN 2-1/2" LONG.

10. DEAD BOLTS SHALL HAVE HARDENED INSERTS. DEADLOCKING LATCH WITH KEY-OPERATED LOCKS SHALL BE PROVIDED AT EXTERIOR DOORS. LOCKS MUST BE OPENABLE FROM INSIDE WITHOUT KEY, SPECIAL KNOWLEDGE OR SPECIAL EFFORT (LATCH NOT REQUIRED IN B, F, AND S OCCUPANCIES).

11. STRAIGHT DEAD BOLTS SHALL HAVE A MIN. THROW OF 1" AND AN EMBEDMENT OF NOT LESS THAN 5/8". A HOOK-SHAPED OR AN EXPANDING-LUG DEADBOLT SHALL HAVE A MINIMUM THROW OF 3/4".

12. WOOD PANEL TYPE DOORS MUST HAVE PANELS AT LEAST 9/16 IN. THICK WITH SHAPED PORTIONS NOT LESS THAN 1/4 IN. THICK AND INDIVIDUAL PANELS MUST BE NO MORE 300 SQ. IN. IN AREA. MULLIONS SHALL BE CONSIDERED A PART OF ADJACENT PANELS EXCEPT MULLIONS NOT OVER 18 INCHES LONG MAY HAVE AN OVERALL WIDTH OF NOT LESS THAN 2 INCHES. STILES AND RAILS SHALL BE OF SOLID LUMBER IN THICKNESS WITH OVERALL DIMENSIONS OF NOT LESS THAN 1 3/8 INCHES AND 3 INCHES IN WIDTH.

13. GLAZED OPENINGS WITHIN 40" OF THE DOOR LOCK WHEN THE DOOR IS IN THE CLOSED POSITION, SHALL BE FULLY TEMPERED GLASS OR APPROVED BURGLARY RESISTANT MATERIAL, OR SHALL BE PROTECTED BY METAL BARS, SCREENS OR GRILLS HAVING A MAXIMUM OPENING OF 2". THE PROVISIONS OF THIS SECTION SHALL NOT APPLY TO VIEW PORTS OR WINDOWS WHICH DO NOT EXCEED 2" IN THEIR GREATEST DIMENSIONS.

14. MAXIMUM HEIGHT OF THRESHOLD SHALL BE 1/2" WITH A MAXIMUM BEVEL OF 45 DEGREES. CHANGE IN LEVEL BETWEEN 1/4" AND 1/2" SHALL BE BEVELED WITH A SLOPE NO GREATER THAN 1:2.

15. THERE SHALL BE A LEVEL AND CLEAR FLOOR OR LANDING ON EACH SIDE OF THE DOOR. THE LEVEL AREA SHALL HAVE A LENGTH IN THE DIRECTION OF DOOR SWING OF AT LEAST 60" AND THE LENGTH OPPOSITE THE DIRECTION OF THE DOOR SWING OF 48" AS MEASURED AT RIGHT ANGLES TO THE PLANE OF THE DOOR IN THE CLOSED POSITION.

16. THE WIDTH OF THE LEVEL AREA ON THE SIDE TO WHICH THE DOOR SWINGS SHALL EXTEND 24" PAST THE STRIKE EDGE OF THE DOOR FOR EXTERIOR DOORS AND 18" PAST THE STRIKE EDGE FOR INTERIOR DOORS.

17. PROVIDE CLEAR SPACE OF 12" PAST STRIKE EDGE OF THE DOOR ON THE OPPOSITE SIDE TO WHICH THE DOOR SWINGS IF THE DOOR IS EQUIPPED WITH BOTH A LATCH AND A CLOSER ON THE PUSH SIDE OF THE DOOR.

18. THE FLOOR OR LANDING SHALL BE NOT MORE THAN 1/2" LOWER THAN THE THRESHOLD OF THE DOORWAY.

19. ALL MEANS OF EGRESS SHALL COMPLY WITH CBC CHAPTER 10.

WINDOW NOTES

1. GLASS: ALL GLASS TO BE FULLY TEMPERED.

2. GLAZING SEALANT: SILICONE, COMPATIBLE WITH ADJACENT MATERIALS.

3. TYPE B: 1" THICK INSULATED ASSEMBLY CONSISTING OF 1/4" THICK, TEMPERED CLEAR SOLARBAN 60 SOLAR CONTROL LOW-E GLASS BY PPG, 1/2" ARGON GAS SPACE, AND TYPE "A" GLASS FOR THE INTERIOR LITE. GLASS SHALL PROVIDE A VISIBLE LIGHT TRANSMITTANCE OF 70 PERCENT AND A SHADING COEFFICIENT OF .44.

4. EACH LIGHT SHALL BEAR THE MANUFACTURER'S LABEL DESIGNATING THE TYPE AND THICKNESS OF GLASS. WHEN APPROVED BY THE ENFORCEMENT AGENCY, LABELS MAY BE OMITTED FROM OTHER THAN SAFETY GLAZING MATERIALS, PROVIDED AN AFFIDAVIT IS FURNISHED BY THE GLAZING CONTRACTOR CERTIFYING THAT EACH LIGHT IS GLAZED IN ACCORDANCE WITH APPROVED PLANS AND SPECIFICATIONS.

5. EACH LIGHT OF SAFETY GLAZING MATERIAL INSTALLED IN HAZARDOUS LOCATIONS AS DEFINED IN SECTION 2406.4 SHALL BE IDENTIFIED BY A PERMANENT LABEL THAT SPECIFIES THE LABELER, WHETHER THE MANUFACTURER OF INSTALLER, AND STATE THAT SAFETY GLAZING MATERIAL HAS BEEN UTILIZED IN SUCH INSTALLATION. THE IDENTIFICATION SHALL BE ETCHED OR CERAMIC FIRED ON THE GLASS AND READABLE FROM THE INSIDE OF THE BUILDING AFTER INSTALLATION.

6. EACH UNIT OF TEMPERED GLASS SHALL BE PERMANENTLY IDENTIFIED BY THE MANUFACTURER. THE IDENTIFICATION SHALL BE ETCHED OR CERAMIC FIRED ON THE GLASS AND BE VISIBLE WHEN THE UNIT IS GLAZED.

7. SEE STRUCTURAL DRAWINGS FOR HEADER INFORMATION.

INTERIOR FINISH NOTES

1. ALL SURFACES WITHOUT A FACTORY FINISH SHALL BE PAINTED.

2. ALL FLOOR FINISHES THAT TERMINATE AT A DOOR OPENING SHALL JOIN ADJACENT FINISHES AT THE CINTERLINE OF DOOR AND / OR TERMINATE BELOW THRESHOLD WHERE OCCURS.

3. ALL GYPSUM BOARD SHALL BE TYPE 'X'.

4. REFER TO INTERIOR ELEVATION FOR ADDITIONAL INFORMATION.

5. CERAMIC TILE COVE BASE SHALL MINIMUM 3/8" RADIUS.

6. WALL, CEILING AND FLOOR FINISHES SHALL COMPLY WITH CBC SECTION 803 AND 804.

7. REFER TO PROJECT SPECIFICATIONS FOR ADDITIONAL INFORMATION.

LEGEND

FLOORING:

LUXURY VINYL TILE (LVT)	F1
SEALED AND POLISHED CONCRETE	F2
SEALED CONCRETE	F3
CERAMIC TILE	F4
QUARRY TILE	F5

BASE:

"STRAIGHT" RUBBER TOPSET	B1
CERAMIC TILE COVE	B2
QUARRY TILE COVE	B3

WALL:

EXPOSED CMU WALL	W1
STOREFRONT	W2
GYPSUM BOARD	W3
CERAMIC TILE O/ BASE WALL	W4
"SMOOTH" FIBER REINFORCED PANEL	W5
FIBERGLASS REINFORCED PANEL	W6
STAINLESS STEEL WALL PANEL	W7

CEILING:

SUSPENED GYPSUM BOARD	C1
EXPOSED STRUCTURE	C2

AGENCY

FLEWELLING & MOODY
architecture planning interiors

HEADQUARTERS OFFICE:
99 S. Lake Avenue, Suite 300
Pasadena, CA 91101
Phone: 323.543.8300
E-Mail: fm-pasadena@flewelling-moody.com

ANTELOPE VALLEY OFFICE:
1035 West Lancaster Bouldvard
Lancaster, California 93534
Phone: 661.949.0771
E-Mail: fm-lancaster@flewelling-moody.com

An Employee Owned Corporation

ARCHITECT

LICENSED ARCHITECT — MATTHEW T. GARDNER — C-14211 — 08/31/2025 — STATE OF CALIFORNIA

CONSULTANT

Drawn by: Author
Check by: Checker
Revisions

No.	Date	Description
1	08/27/2025	BID ALTERNATE

All dimensions must be checked at the job by the contractor who accepts full responsibility for their accuracy under the contract. These plans & the specifications in connection therewith have been prepared for a specific site. Any and all responsibility for their use in whole or in part on any other site is hereby disclaimed by Flewelling & Moody.

CITY OF RIDGECREST

SGT. JOHN PINNEY MEMORIAL POOL REPLACEMENT PROJECT

205 S WARNER ST, RIDGECREST, CA 93555

Drawing Title

DOOR, WINDOW & INTERIOR FINISH SCHEDULES ALT 6

Job No. 3055-0100
Sheet No. **A7.01A6**
Date 12/20/2024

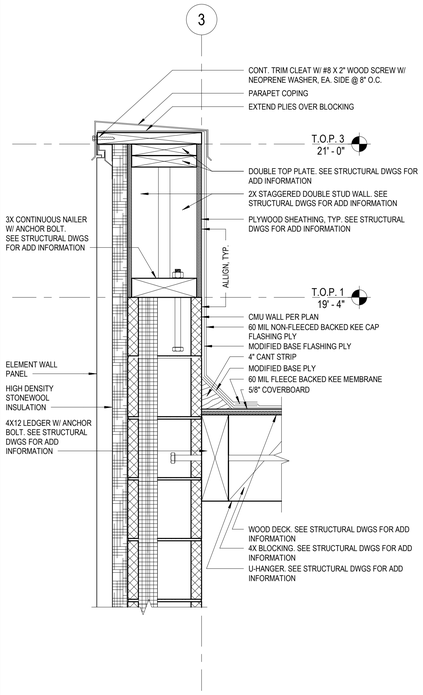

VERTICALLY STACKED CMU & WOOD FRAMED WALL

SCALE: 1 1/2" = 1'-0"

15 / A8.01

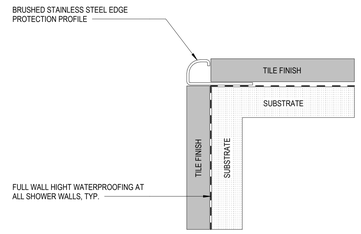

WALL TILE EDGE PROTECTION PROFILE SECTION

SCALE: 12" = 1'-0"

12 / A8.01

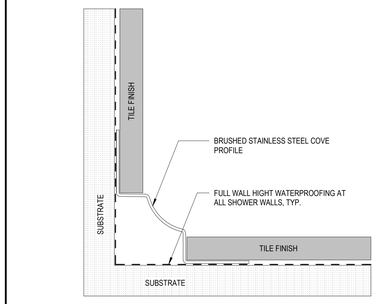

BASE COVE SECTION, INSIDE WALL CORNER SIM

SCALE: 12" = 1'-0"

8 / A8.01

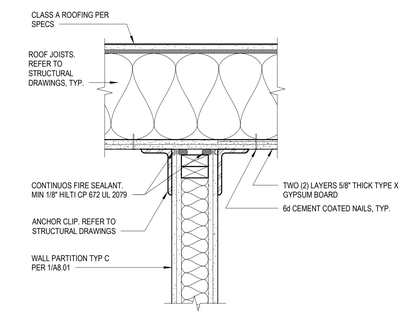

2 HR TOP OF WALL PERPENDICULAR TO ROOF JOIST UL301

SCALE: 1 1/2" = 1'-0"

4 / A8.01

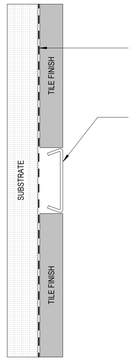

WALL TILE BORDER PROFILE SECTION

SCALE: 12" = 1'-0"

11 / A8.01

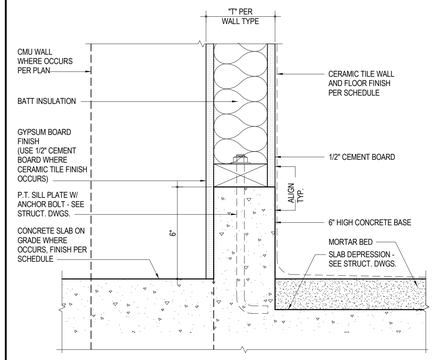

STUD WALL BASE CURB DETAIL

SCALE: 3" = 1'-0"

7 / A8.01

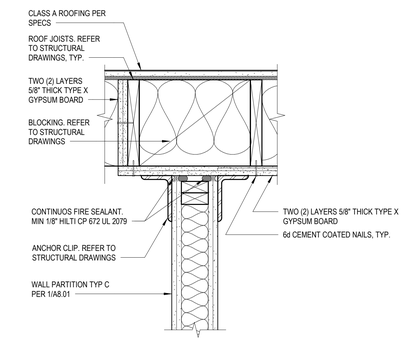

2 HR TOP OF WALL PARALLEL TO ROOF JOIST UL301

SCALE: 1 1/2" = 1'-0"

3 / A8.01

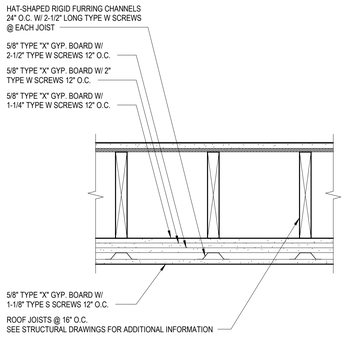

2 HR GYPSUM CEILING UL556

SCALE: 1 1/2" = 1'-0"

17 / A8.01

EXTERIOR CMU WALL TYPES | INTERIOR CMU WALL TYPES

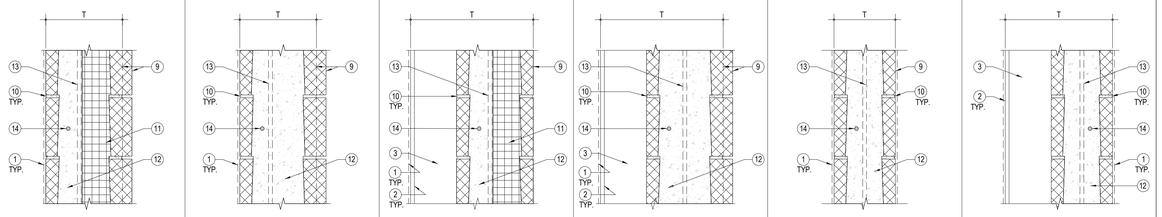

# WALL PARTITION TYPES	F1	F2	G	K	L	H	J
BASIC THICKNESS (T)	9-5/8"	9-5/8"	9-5/8"	1'-3 3/4"	1'-3 3/4"	7-5/8"	1'-1 5/8"
FIRE RATING	1 HR	1 HR	-	-	-	2 HR	1 HR
TESTING NUMBER	-	-	-	-	-	U906	-
INSULATION	R-15	R-15	-	R-15	-	-	-
STUD SIZE (U.N.O.)	-	-	-	2X6	2X6	-	2X6
HEIGHT LIMIT (L/240)	22'	22'	22'	22'	22'	22'	22'
BASE AND TOP ANCHORS	-	-	-	-	-	-	-
REMARKS	301 SCORE (FLUTE), NOTE 8	NOTE 8	301 SCORE (FLUTE)	301 SCORE (FLUTE), NOTE 6, NOTE 8	301 SCORE (FLUTE)		NOTE 6

WOOD STUD INTERIOR WALL TYPES | WOOD STUD EXTERIOR WALL TYPES

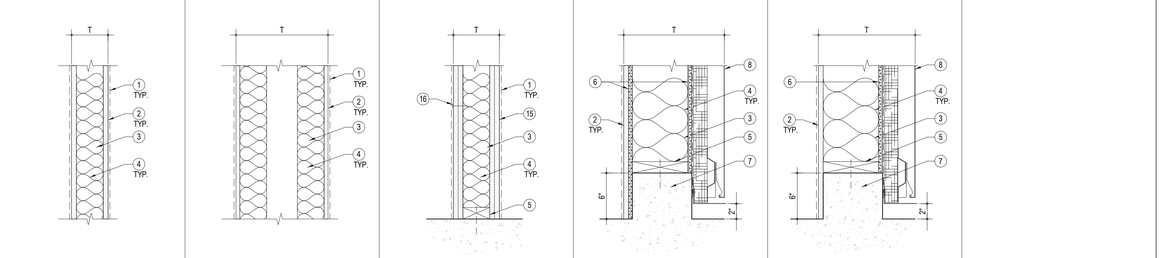

# WALL PARTITION TYPES	A1	A2	B1	B2	C	D	E
BASIC THICKNESS (T)	4-3/4"	6-3/4"	9-5/8"	19-1/2"	6"	1'-1 1/8"	1'-5/8"
FIRE RATING	-	-	-	-	2 HRS	-	-
TESTING NUMBER	-	-	-	-	UL301	-	-
INSULATION	3-1/2" THK.	5-1/2" THK.	3-1/2" THK. (EA/SIDE)	3-1/2" THK. (EA/SIDE)	3-1/2" THK.	R-19	R-19
STUD SIZE (U.N.O.)	2X4	2X6	2X4 (EA/SIDE)	2X4 (EA/SIDE)	2X4	2X8	2X8
HEIGHT LIMIT (L/240)	22'	22'	22'	22'	22'	22'	22'
BASE AND TOP ANCHORS	-	-	-	-	-	-	-
REMARKS	NOTE 6	NOTE 6		NOTE 6	NOTE 7		

GENERAL NOTES

1. SUBSTITUTE GYPSUM BOARD PER CONDITIONS LISTED BELOW:
   - A. FIRE RATED WALL: USE TYPE 'X' GYPSUM BOARD
   - B. WET WALL WITH TILE FINISH: USE CEMENT BOARD OVER W.P. MEMBRANE
   - C. WET WALL WITHOUT TILE FINISH: USE WATER-RESISTANT BOARD OVER W.P. MEMBRANE
   - D. STORAGE & MECHANICAL AREAS: USE IMPACT RESISTANT GYPSUM BOARD
2. ALL STUDS TO EXTEND FULL HEIGHT TO STRUCTURE ABOVE, U.N.O. ON PLANS
3. EXTEND GYPSUM BOARD AND INSULATION MINIMUM OF 6" ABOVE SUSPENDED CEILING
4. STUD HEIGHT SHOWN ARE FOR NON-STRUCTURAL PARTITION WALL. REFER TO STRUCTURAL DWGS. FOR ALLOWABLE MAXIMUM HEIGHT FOR STRUCTURAL WALL
5. SEE PROJECT SPECIFICATIONS FOR ADDITIONAL INFORMATION
6. REFER TO 7/A8.01 FOR WET WALL BASE CURB DETAIL
7. REFER TO 3&4/A8.01 FOR 2 HR FIRE RATED TOP OF WALL ASSEMBLY
8. EXTEND PRE-INSULATED CMU BLOCK MINIMUM 6" ABOVE ROOF SHEATHING

KEYNOTES

1. FINISH PER PLANS, INTERIOR ELEVATIONS AND FINISH SCHEDULE
2. 5/8" THK. GYPSUM BOARD (SEE GENERAL NOTE 1 FOR SUBSTITUTION AT DIFFERENT CONDITIONS)
3. WOOD STUD PER PLANS, STUD SIZE AS NOTED
4. INTERIOR WALL: ACOUSTIC INSULATION EXTERIOR WALL: MINERAL FIBER BATT INSULATION
5. SILL PLATE AND ANCHORAGE PER STRUCTURAL DRAWINGS
6. PROVIDE PLYWOOD SHEATHING WHERE REQUIRED PER STRUCTURAL DRAWINGS
7. 6" HIGH CONCRETE CURB
8. EXTERIOR METAL PANEL SYSTEM
9. CMU BLOCK PER PLANS AND EXTERIOR ELEVATIONS, BASIC THICKNESS AS NOTED
10. MORTAR JOINT
11. 3-1/2" PRE-INSULATION INSERTS W/ LAPPED JOINTS.
12. GROUT SOLID PER STRUCTURAL DRAWINGS
13. VERT REINFORCEMENT PER STRUCTURAL DRAWINGS
14. HORIZ REINFORCEMENT PER STRUCTURAL DRAWINGS
15. TWO (2) LAYERS 5/8" THK. GYPSUM BOARD AT BOTH SIDE OF 2X STUD FRAMING (SEE GENERAL NOTE 1 FOR SUBSTITUTION AT DIFFERENT CONDITIONS)
16. 6d CEMENT COATED NALES 1 -7/8" LONG

WALL PARTITION TYPES

SCALE: 1 1/2" = 1'-0"

1 / A8.01

AGENCY

REVIEWED FOR CODE COMPLIANCE BY: WILLDAN ENGINEERING

Approval of these plans & specifications shall not be construed to be a permit for, or an approval of any violation of any Federal, State, County or City laws or ordinances. One set of approved plans must be kept on the job until completion.

9:24:26 AM Jul 21, 2025

FLEWELLING & MOODY
architecture planning interiors

HEADQUARTERS OFFICE:
99 S. Lake Avenue, Suite 300
Pasadena, CA 91101
Phone: 323.543.8300
E-Mail: fm-pasadena@flewelling-moody.com

ANTELOPE VALLEY OFFICE:
1035 West Lancaster Bouldvard
Lancaster, California 93534
Phone: 661.949.0771
E-Mail: fm-lancaster@flewelling-moody.com

An Employee Owned Corporation

ARCHITECT

LICENSED ARCHITECT — MATT T. GABBERT — C-14211 — 06/30/2025 — STATE OF CALIFORNIA

CONSULTANT

Drawn by: Author

Check by: Checker

Revisions

No.	Date	Description

All dimensions must be checked at the job by the contractor who accepts full responsibility for their accuracy under the contract. These plans & the specifications in connection therewith have been prepared for a specific site. Any and all responsibility for their use in whole or in part on any other site is hereby disclaimed by Flewelling & Moody.

CITY OF RIDGECREST

SGT. JOHN PINNEY MEMORIAL POOL REPLACEMENT PROJECT

205 S WARNER ST, RIDGECREST, CA 93555

Drawing Title

WALL TYPES AND FIRE RATING DETAILS

Job No. 3055-0100

Date 07/14/2025

Sheet No. **A8.01**

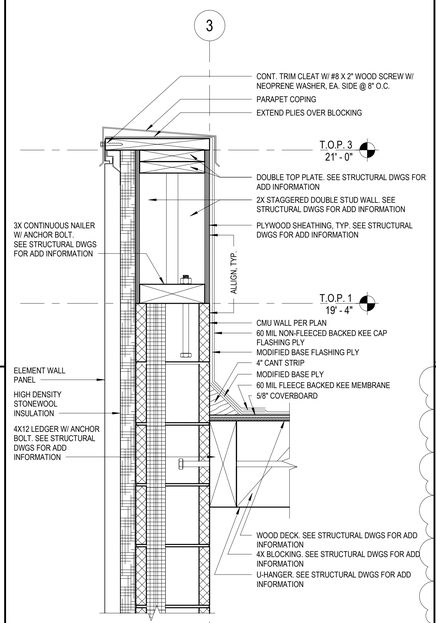

VERTICALLY STACKED CMU & WOOD FRAMED WALL

SCALE: 1 1/2" = 1'-0"

15 A8.01A5

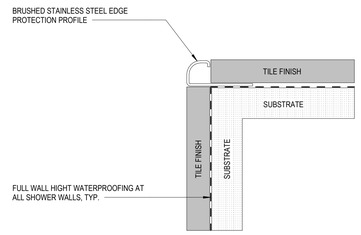

WALL TILE EDGE PROTECTION PROFILE SECTION

SCALE: 12" = 1'-0"

12 A8.01A5

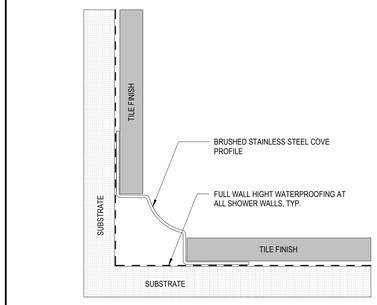

BASE COVE SECTION, INSIDE WALL CORNER SIM

SCALE: 12" = 1'-0"

8 A8.01A5

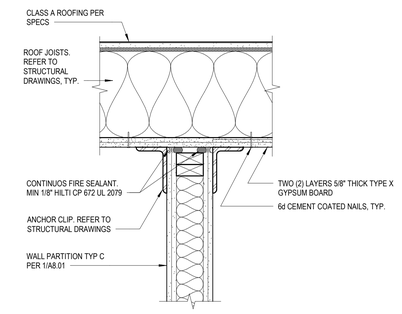

2 HR TOP OF WALL PERPENDICULAR TO ROOF JOIST UL30

SCALE: 1 1/2" = 1'-0"

4 A8.01A5

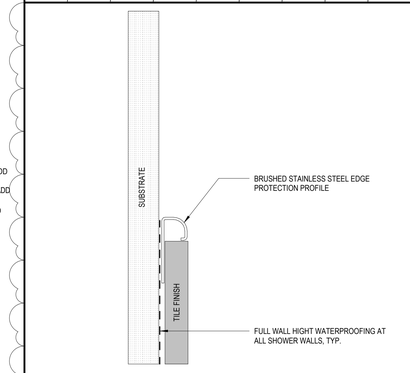

WALL TILE BORDER PROFILE SECTION

SCALE: 12" = 1'-0"

11 A8.01A5

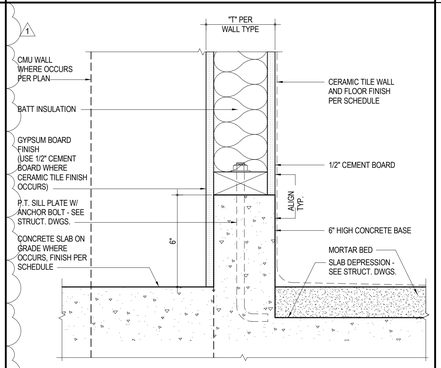

STUD WALL BASE CURB DETAIL

SCALE: 3" = 1'-0"

7 A8.01A5

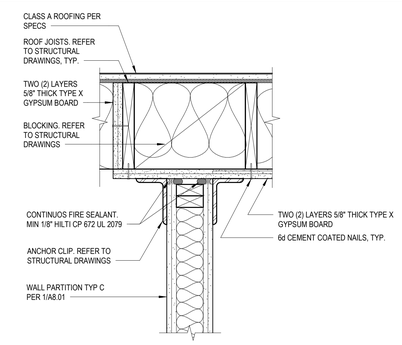

2 HR TOP OF WALL PARALLEL TO ROOF JOIST UL301

SCALE: 1 1/2" = 1'-0"

3 A8.01A5

EXTERIOR CMU WALL TYPES

INTERIOR CMU WALL TYPES

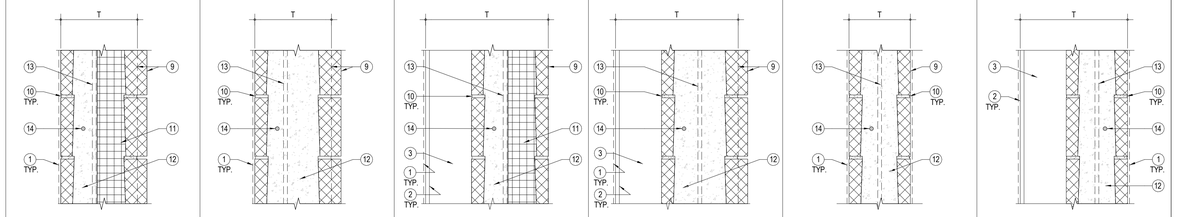

# WALL PARTITION TYPES	F1	F2	G	K	L	H	J
BASIC THICKNESS (T)	9-5/8"	9-5/8"	9-5/8"	1'-3 3/4"	1'-3 3/4"	7-5/8"	1'-1 5/8"
FIRE RATING	1 HR	1 HR	-	-	-	2 HR	1 HR
TESTING NUMBER	-	-	-	-	-	U906	-
INSULATION	R-15	R-15	-	R-15	-	-	-
STUD SIZE (U.N.O.)	-	-	-	2X6	2X6	-	2X6
HEIGHT LIMIT (L/240)	22'	22'	22'	22'	22'	22'	22'
BASE AND TOP ANCHORS	-	-	-	-	-	-	-
REMARKS	301 SCORE (FLUTE), NOTE 8	NOTE 8	301 SCORE (FLUTE)	301 SCORE (FLUTE), NOTE 6, NOTE 8	301 SCORE (FLUTE)		NOTE 6

WOOD STUD INTERIOR WALL TYPES

WOOD STUD EXTERIOR WALL TYPES

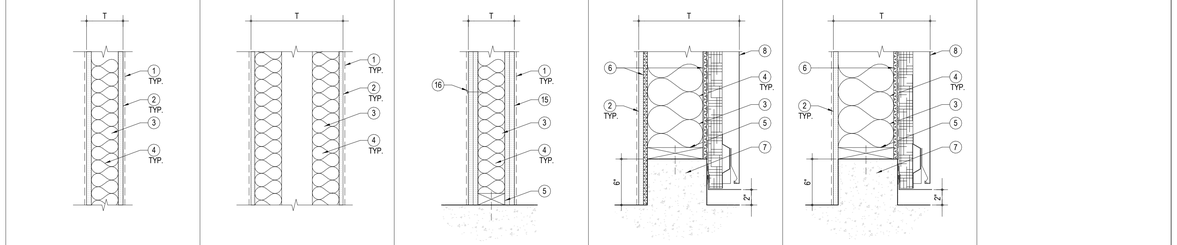

# WALL PARTITION TYPES	A1	A2	B1	B2	C	D	E
BASIC THICKNESS (T)	4-3/4"	6-3/4"	9-5/8"	19-1/2"	6"	1'-1 1/8"	1'-5/8"
FIRE RATING	-	-	-	-	2 HRS	-	-
TESTING NUMBER	-	-	-	-	UL301	-	-
INSULATION	3-1/2" THK.	5-1/2" THK.	3-1/2" THK. (EA/SIDE)	3-1/2" THK. (EA/SIDE)	3-1/2" THK.	R-19	R-19
STUD SIZE (U.N.O.)	2X4	2X6	2X4 (EA/SIDE)	2X4 (EA/SIDE)	2X4	2X8	2X8
HEIGHT LIMIT (L/240)	22'	22'	22'	22'	22'	22'	22'
BASE AND TOP ANCHORS	-	-	-	-	-	-	-
REMARKS	NOTE 6	NOTE 6		NOTE 6	NOTE 7		

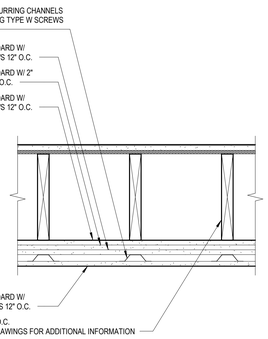

2 HR GYPSUM CEILING UL556

SCALE: 1 1/2" = 1'-0"

17 A8.01A5

GENERAL NOTES

1. SUBSTITUTE GYPSUM BOARD PER CONDITIONS LISTED BELOW:
   - A. FIRE RATED WALL: USE TYPE 'X' GYPSUM BOARD
   - B. WET WALL WITH TILE FINISH: USE CEMENT BOARD OVER W.P. MEMBRANE
   - C. WET WALL WITHOUT TILE FINISH: USE WATER-RESISTANT BOARD OVER W.P. MEMBRANE
   - D. STORAGE & MECHANICAL AREAS: USE IMPACT RESISTANT GYPSUM BOARD
2. ALL STUDS TO EXTEND FULL HEIGHT TO STRUCTURE ABOVE, U.N.O. ON PLANS
3. EXTEND GYPSUM BOARD AND INSULATION MINIMUM OF 6" ABOVE SUSPENDED CEILING
4. STUD HEIGHT SHOWN ARE FOR NON-STRUCTURAL PARTITION WALL. REFER TO STRUCTURAL DWGS. FOR ALLOWABLE MAXIMUM HEIGHT FOR STRUCTURAL WALL
5. SEE PROJECT SPECIFICATIONS FOR ADDITIONAL INFORMATION
6. REFER TO 7/A8.01 FOR WET WALL BASE CURB DETAIL
7. REFER TO 3&4/A8.01 FOR 2 HR FIRE RATED TOP OF WALL ASSEMBLY
8. EXTEND PRE-INSULATED CMU BLOCK MINIMUM 6" ABOVE ROOF SHEATHING

KEYNOTES

1. FINISH PER PLANS, INTERIOR ELEVATIONS AND FINISH SCHEDULE
2. 5/8" THK. GYPSUM BOARD (SEE GENERAL NOTE 1 FOR SUBSTITUTION AT DIFFERENT CONDITIONS)
3. WOOD STUD PER PLANS, STUD SIZE AS NOTED
4. INTERIOR WALL: ACOUSTIC INSULATION EXTERIOR WALL: MINERAL FIBER BATT INSULATION
5. SILL PLATE AND ANCHORAGE PER STRUCTURAL DRAWINGS
6. PROVIDE PLYWOOD SHEATHING WHERE REQUIRED PER STRUCTURAL DRAWINGS
7. 6" HIGH CONCRETE CURB
8. EXTERIOR METAL PANEL SYSTEM
9. CMU BLOCK PER PLANS AND EXTERIOR ELEVATIONS, BASIC THICKNESS AS NOTED
10. MORTAR JOINT
11. 3-1/2" PRE-INSULATION INSERTS W/ LAPPED JOINTS.
12. GROUT SOLID PER STRUCTURAL DRAWINGS
13. VERT REINFORCEMENT PER STRUCTURAL DRAWINGS
14. HORIZ REINFORCEMENT PER STRUCTURAL DRAWINGS
15. TWO (2) LAYERS 5/8" THK. GYPSUM BOARD AT BOTH SIDE OF 2X STUD FRAMING (SEE GENERAL NOTE 1 FOR SUBSTITUTION AT DIFFERENT CONDITIONS)
16. 6d CEMENT COATED NALES 1 -7/8" LONG

WALL PARTITION TYPES

SCALE: 1 1/2" = 1'-0"

1 A8.01A5

AGENCY

FLEWELLING & MOODY
architecture planning interiors

HEADQUARTERS OFFICE:
99 S. Lake Avenue, Suite 300
Pasadena, CA 91101
Phone: 323.543.8300
E-Mail: fm-pasadena@flewelling-moody.com

ANTELOPE VALLEY OFFICE:
1035 West Lancaster Bouldvard
Lancaster, California 93534
Phone: 661.949.0771
E-Mail: fm-lancaster@flewelling-moody.com

An Employee Owned Corporation

ARCHITECT

LICENSED ARCHITECT
MATT T. GABBERT
C-14211
Exp. date: 08/31/2025
STATE OF CALIFORNIA

CONSULTANT

Drawn by: Author

Check by: Checker

Revisions

No.	Date	Description
1	08/27/2025	BID ALTERNATE

All dimensions must be checked at the job by the contractor who accepts full responsibility for their accuracy under the contract. These plans & the specifications in connection therewith have been prepared for a specific site. Any and all responsibility for their use in whole or in part on any other site is hereby disclaimed by Flewelling & Moody.

CITY OF RIDGECREST

SGT. JOHN PINNEY MEMORIAL POOL REPLACEMENT PROJECT

205 S WARNER ST, RIDGECREST, CA 93555

Drawing Title

WALL TYPES AND FIRE RATING DETAILS ALT 5

Job No. 3055-0100

Sheet No. **A8.01A5**

Date 12/20/2024

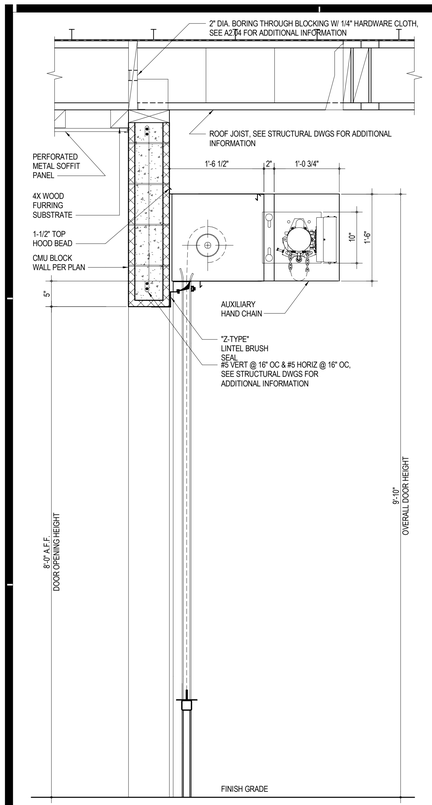

ROLL-UP DOOR SECTION

SCALE: 1" = 1'-0"

19 A8.02

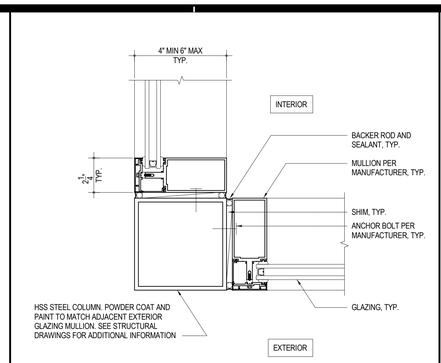

EXTERIOR GLAZING SYSTEM JAMB @ HSS COLUMN

SCALE: 3" = 1'-0"

16 A8.02

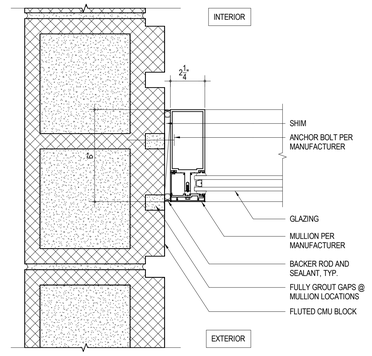

CURTAIN WALL JAMB @ CMU WALL

SCALE: 3" = 1'-0"

12 A8.02

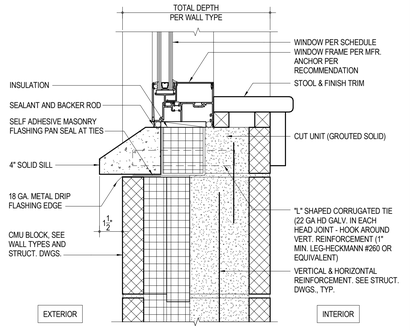

EXTERIOR WINDOW SILL

SCALE: 3" = 1'-0"

8 A8.02

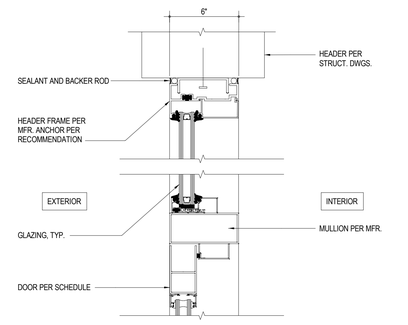

CURTAIN WALL DOOR HEADER @ TRANSOM

SCALE: 3" = 1'-0"

4 A8.02

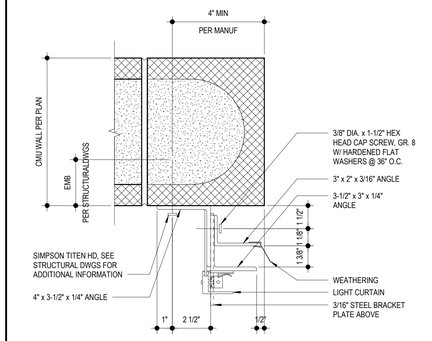

ROLL-UP DOOR JAMB

SCALE: 3" = 1'-0"

15 A8.02

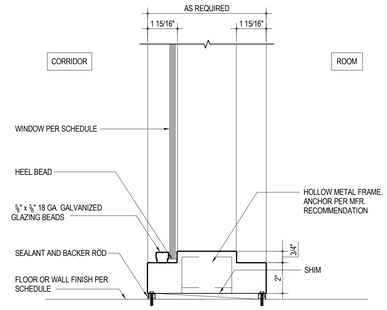

INTERIOR WINDOW SILL

SCALE: 3" = 1'-0"

11 A8.02

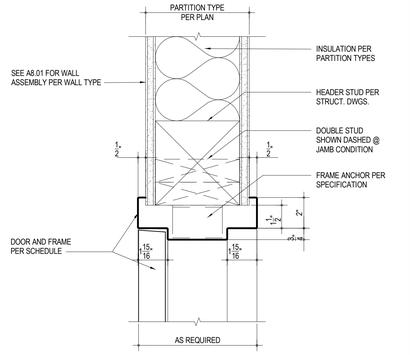

INTERIOR DOOR HEADER (JAMB SIM)

SCALE: 3" = 1'-0"

7 A8.02

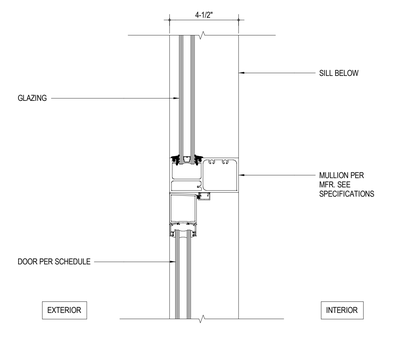

STOREFRONT DOOR JAMB @ MULLION

SCALE: 3" = 1'-0"

3 A8.02

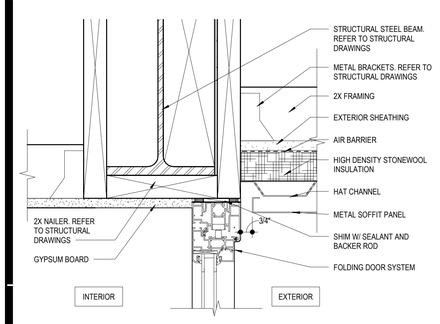

FOLDING DOOR HEADER DETAIL

SCALE: 3" = 1'-0"

18 A8.02

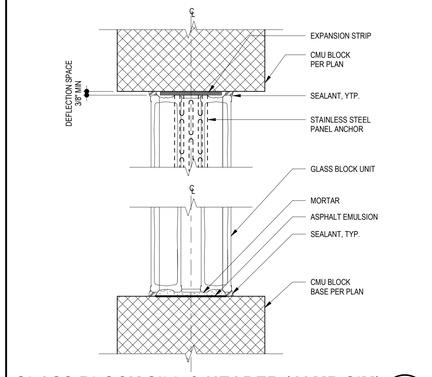

GLASS BLOCK SILL & HEADER (JAMB SIM)

SCALE: 3" = 1'-0"

14 A8.02

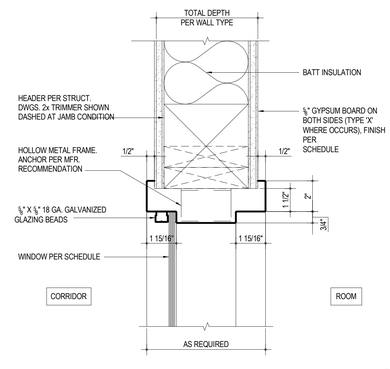

INTERIOR WINDOW HEADER (JAMB SIM)

SCALE: 3" = 1'-0"

10 A8.02

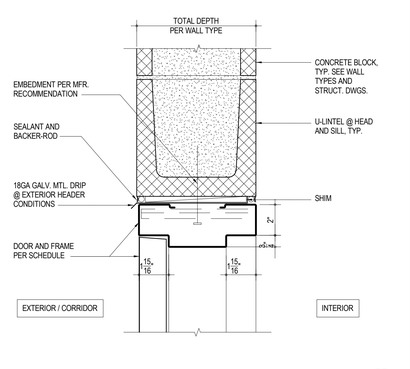

DOOR HEADER @ CMU (JAMB SIM)

SCALE: 3" = 1'-0"

6 A8.02

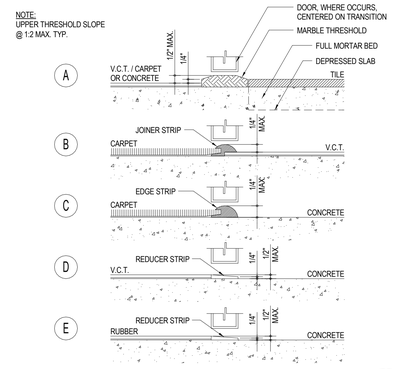

INT. DOOR THRESH

SCALE: 3" = 1'-0"

2 A8.02

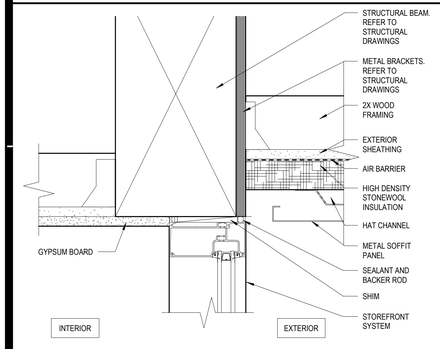

STOREFRONT HEADER DETAIL

SCALE: 3" = 1'-0"

17 A8.02

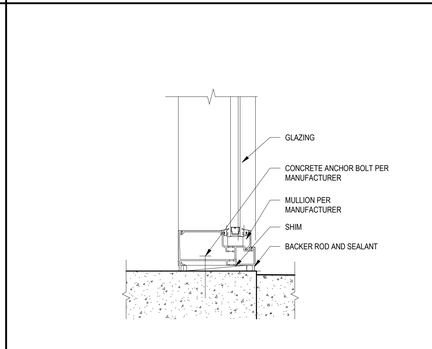

STOREFRONT MULLION @ FLOOR

SCALE: 3" = 1'-0"

13 A8.02

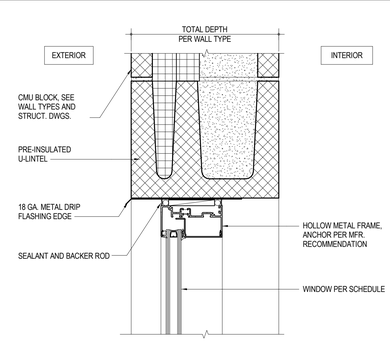

EXTERIOR WINDOW HEADER (JAMB SIM)

SCALE: 3" = 1'-0"

9 A8.02

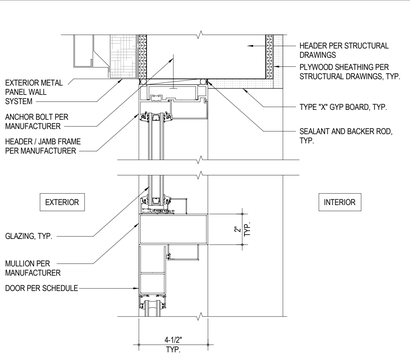

STOREFRONT DOOR HEADER @ ENTRY

SCALE: 3" = 1'-0"

5 A8.02

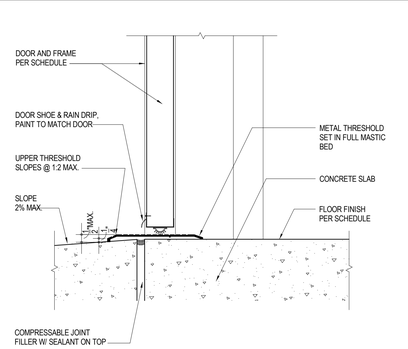

EXTERIOR DOOR THRESHOLD DETAIL

SCALE: 3" = 1'-0"

1 A8.02

AGENCY

REVIEWED FOR CODE COMPLIANCE BY: WILLDAN ENGINEERING

Approval of these plans & specifications shall not be construed to be a permit for, or an approval of any violation of any Federal, State, County or City laws or ordinances. One set of approved plans must be kept on the job until completion.

9:24:27 AM Jul 21, 2025

FLEWELLING & MOODY
architecture planning interiors

HEADQUARTERS OFFICE:
99 S. Lake Avenue, Suite 300
Pasadena, CA 91101
Phone: 323.543.8300
E-Mail: fm-pasadena@flewelling-moody.com

ANTELOPE VALLEY OFFICE:
1035 West Lancaster Boulevard
Lancaster, California 93534
Phone: 661.949.0771
E-Mail: fm-lancaster@flewelling-moody.com

An Employee Owned Corporation

ARCHITECT

LICENSED ARCHITECT — MATTHEW T. GARDNER — C-14211 — 06/30/2025 — STATE OF CALIFORNIA

CONSULTANT

Drawn by: Author

Check by: Checker

Revisions

No.	Date	Description

All dimensions must be checked at the job by the contractor who accepts full responsibility for their accuracy under the contract. These plans & the specifications in connection therewith have been prepared for a specific site. Any and all responsibility for their use in whole or in part on any other site is hereby disclaimed by Flewelling & Moody.

CITY OF RIDGECREST

SGT. JOHN PINNEY MEMORIAL POOL REPLACEMENT PROJECT

205 S WARNER ST, RIDGECREST, CA 93555

Drawing Title

DOOR & WINDOW DETAILS

Job No. 3055-0100

Date 07/14/2025

Sheet No. **A8.02**

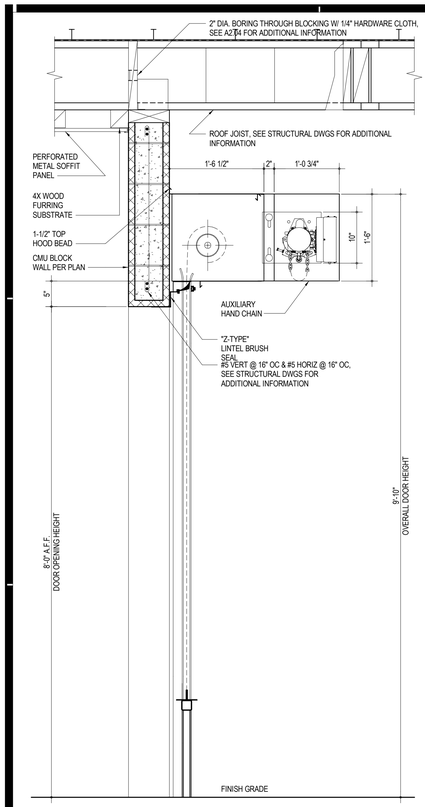

ROLL-UP DOOR SECTION

SCALE: 1" = 1'-0"

19 A8.02A6

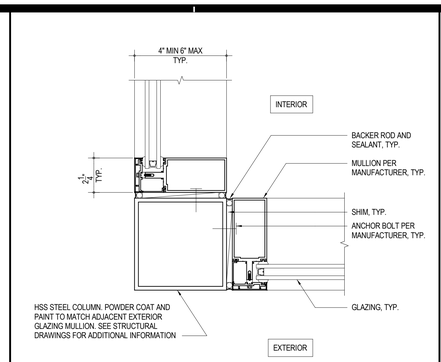

EXTERIOR GLAZING SYSTEM JAMB @ HSS COLUMN

SCALE: 3" = 1'-0"

16 A8.02A6

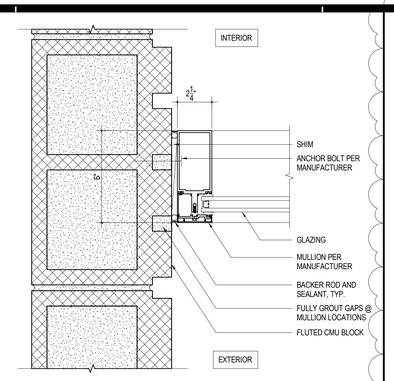

CURTAIN WALL JAMB @ CMU WALL

SCALE: 3" = 1'-0"

12 A8.02A6

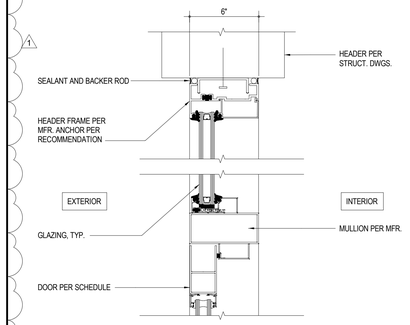

CURTAIN WALL DOOR HEADER @ TRANSOM

SCALE: 3" = 1'-0"

4 A8.02A6

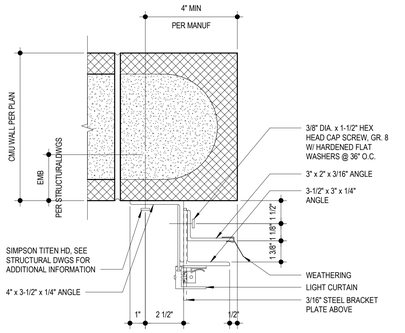

ROLL-UP DOOR JAMB

SCALE: 3" = 1'-0"

15 A8.02A6

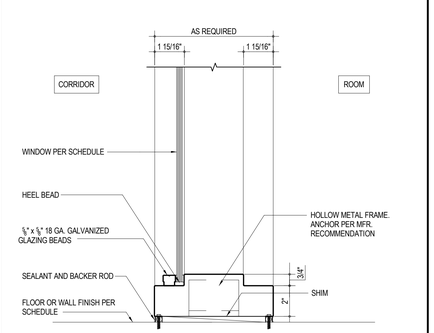

INTERIOR WINDOW SILL

SCALE: 3" = 1'-0"

11 A8.02A6

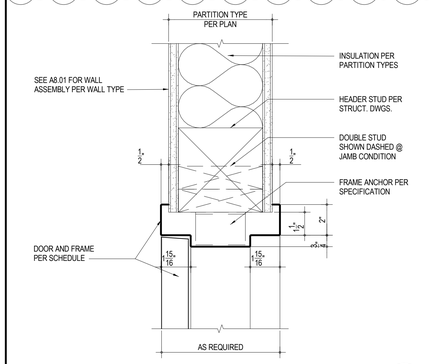

INTERIOR DOOR HEADER (JAMB SIM)

SCALE: 3" = 1'-0"

7 A8.02A6

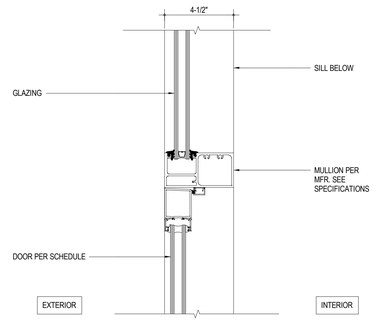

STOREFRONT DOOR JAMB @ MULLION

SCALE: 3" = 1'-0"

3 A8.02A6

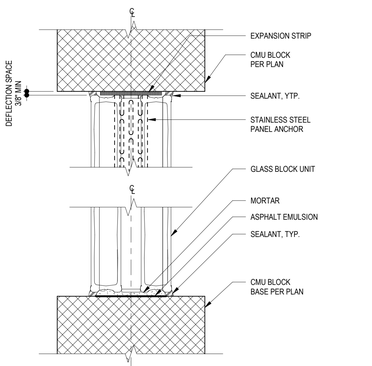

GLASS BLOCK SILL & HEADER (JAMB SIM)

SCALE: 3" = 1'-0"

14 A8.02A6

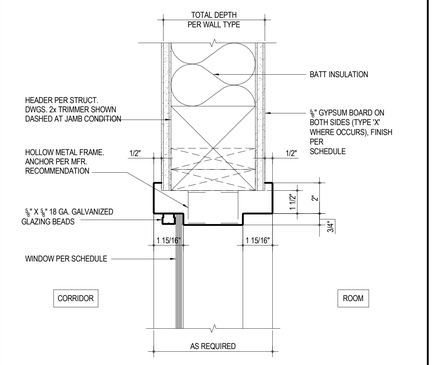

INTERIOR WINDOW HEADER (JAMB SIM)

SCALE: 3" = 1'-0"

10 A8.02A6

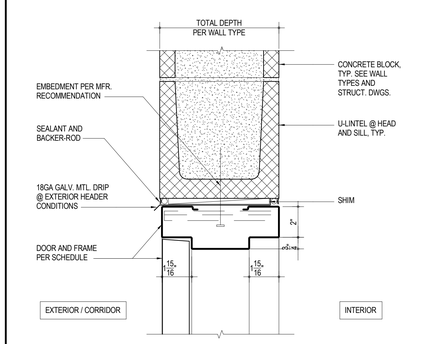

DOOR HEADER @ CMU (JAMB SIM)

SCALE: 3" = 1'-0"

6 A8.02A6

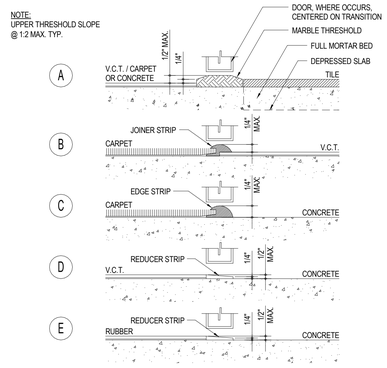

INT. DOOR THRESH

SCALE: 3" = 1'-0"

2 A8.02A6

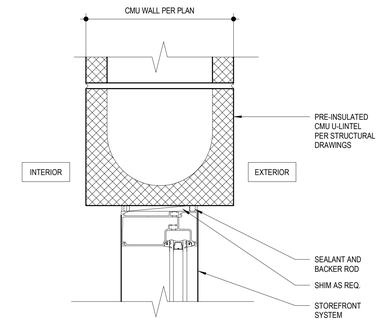

STOREFRONT HEADER DETAIL

SCALE: 3" = 1'-0"

17 A8.02A6

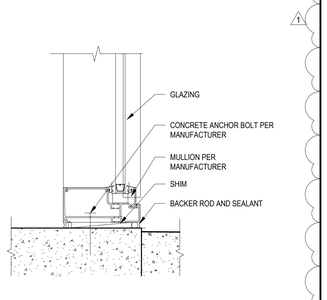

CURTAIN WALL JAMB @ CMU WALL

SCALE: 3" = 1'-0"

13 A8.02A6

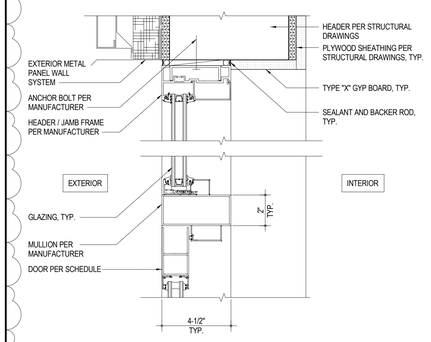

STOREFRONT DOOR HEADER @ ENTRY

SCALE: 3" = 1'-0"

5 A8.02A6

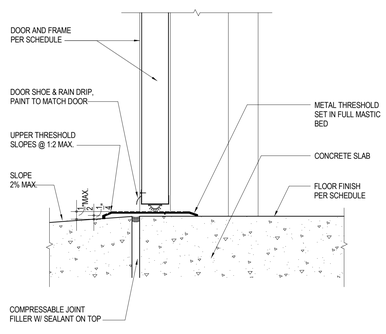

EXTERIOR DOOR THRESHOLD DETAIL

SCALE: 3" = 1'-0"

1 A8.02A6

AGENCY

FLEWELLING & MOODY
architecture planning interiors

HEADQUARTERS OFFICE:
99 S. Lake Avenue, Suite 300
Pasadena, CA 91101
Phone: 323.543.8300
E-Mail: fm-pasadena@flewelling-moody.com

ANTELOPE VALLEY OFFICE:
1035 West Lancaster Bouldvard
Lancaster, California 93534
Phone: 661.949.0771
E-Mail: fm-lancaster@flewelling-moody.com

An Employee Owned Corporation

ARCHITECT

LICENSED ARCHITECT
MATTHEW T. GARDNER
C-14211
RENEWAL 08/31/2025
STATE OF CALIFORNIA

CONSULTANT

Drawn by: Author
Check by: Checker

Revisions

No.	Date	Description
1	08/27/2025	BID ALTERNATE

All dimensions must be checked at the job by the contractor who accepts full responsibility for their accuracy under the contract. These plans & the specifications in connection therewith have been prepared for a specific site. Any and all responsibility for their use in whole or in part on any other site is hereby disclaimed by Flewelling & Moody.

CITY OF RIDGECREST

SGT. JOHN PINNEY MEMORIAL POOL REPLACEMENT PROJECT

205 S WARNER ST, RIDGECREST, CA 93555

Drawing Title

DOOR & WINDOW DETAILS ALT 6

Job No. 3055-0100

Date 12/20/2024

Sheet No. **A8.02A6**

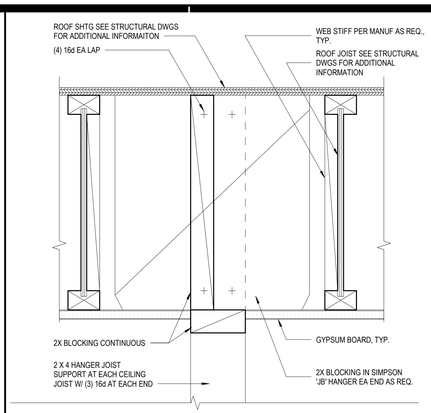

PARELLEL TO ROOF JOIST

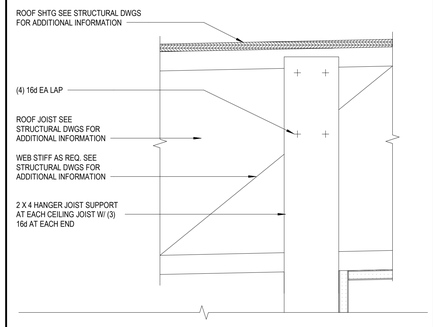

PERPENDICULAR TO ROOF JOIST

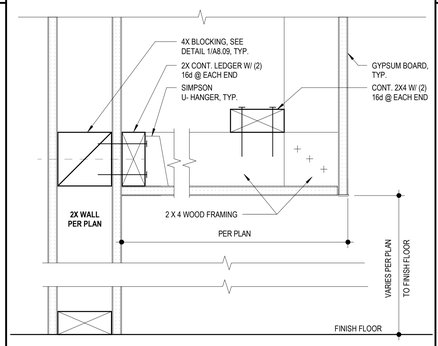

WOOD FRAMED SOFFITT@ WOOD FRAMED WALL

SCALE: 3" = 1'-0"

14 A8.03

SUSPENDED GYPSUM BD. CEILING NOTES

1. ALL DRYWALL SUSPENSION SYSTEMS MANUFACTURED BY USG TO COMPLY WITH ICC-ER-1222
2. MATERIALS ARE TO COMPLY WITH APPLICABLE UBC STANDARDS. GYPSUM BOARD IS EITHER 1/2" OR 5/8" IN THICKNESS.
3. FOR LATERAL LOAD REFER TO CBC, SECTION 1632A. THE WEIGHT OF THE SUSPENDED CEILING SHALL NOT BE LESS THAN FOUR (4) POUNDS PER SQUARE FOOT FOR DESIGN PURPOSES.
4. GYPBOARD CEILINGS SHOULD NOT SUPPORT MATERIALS OR BUILDING COMPONENTS OTHER THAN GRILLS, LIGHT FIXTURES, SMALL ELECTRICAL CONDUITS. ALL SUCH COMPONENTS SHALL BE SUPPORTED EITHER DIRECTLY FROM MAIN RUNNERS, OR BY SUPPLEMENTAL FRAMING WHICH IS SUPPORTED BY MAIN RUNNERS. NO VERTICAL LOADS OTHER THAN GYPBOARD DEAD LOAD SHALL BE APPLIED TO CROSSFURRING.
5. THERE ARE MANY POSSIBLE VARIATIONS OF HANGER AND MAIN RUNNER SIZES AND SPACINGS LISTED IN CBC, TABLE NO. 25A-A, AND ALL OF THE COMBINATIONS ARE ACCEPTABLE. HOWEVER, THE MAIN RUNNERS THAT ARE MOST FREQUENTLY USED ARE 1½" CHANNELS, 0.475 LBS/FT. COLD ROLLED. THIS IS ACCEPTABLE PROVIDED THE FOLLOWING REQUIREMENTS ARE MET.
   A. VERTICAL HANGER WIRES ARE #8 GAGE AND GALVANIZED.

   B. CROSS-FURRING MAY BE 7/8", 25 GAGE GALVANIZED HAT SECTIONS AT 24" MAXIMUM O.C.

   C. IF MAIN RUNNERS ARE SPACED AT 4'-0" O.C., HANGER WIRES SHALL BE SPACED AT 3'-0" MAXIMUM.
   IF MAIN RUNNERS ARE SPACED AT 3'-6" O.C., HANGER WIRES SHALL BE SPACED AT 3'-6" O.C. MAXIMUM.
   IF MAIN RUNNERS ARE SPACED AT 3'-0" O.C., HANGER WIRES SHALL BE SPACED AT 4'-0" MAXIMUM.
   TO USE A HANGER SPACING OF 4'-0" O.C. WITH A MAIN RUNNER SPACING OF 4'-0" O.C., MAIN RUNNERS MUST BE 1½" HOT ROLLED CHANNELS WEIGHING 1.12 LBS/FT. ALSO, #8 GAGE GALVANIZED HANGER WIRES WOULD BE REQUIRED.
   THE FOLLOWING REQUIREMENTS APPLY TO ALL WIRE HANGER/RUNNER COMBINATIONS:

   A. HANGERS SHOULD BE SADDLE-TIED AROUND MAIN RUNNERS TO DEVELOP THE FULL STRENGTH OF THE HANGERS.

   B. CROSS-FURRING SHOULD BE SADDLE-TIED TO THE MAIN RUNNERS WITH ONE STRAND OF #16 GAGE, OR TWO STRANDS OF #18 GAGE TIE WIRE
   C. MAIN RUNNERS SHOULD BE SPLICED BY LAPPING AND INTERLOCKING FLANGES 12" MINIMUM AND TYING NEAR EACH END WITH DOUBLE LOOPS OF #16 GAGE WIRE.
   D. CROSS-FURRING SHOULD BE SPLICED BY LAPPING AND INTERLOCKING THE PIECES EIGHT INCH (8") MINIMUM AND TYING NEAR EACH END WITH DOUBLE LOOPS OF #16 GAGE WIRE
6. FASTEN HANGER WIRES WITH NOT LESS THAN THREE (3) TIGHT TURNS. FASTEN BRACING WIRES WITH FOUR (4) TIGHT TURNS. MAKE ALL TIGHT TURNS WITHIN A DISTANCE OF 1-1/2 INCHES. HANGER OR BRACING WIRE ANCHORS TO THE STRUCTURE SHOULD BE INSTALLED IN SUCH A MANNER THAT THE DIRECTION OF THE WIRE ALIGNS AS CLOSELY AS POSSIBLE WITH THE DIRECTION OF THE FORCES ACTING ON THE WIRE.
7. WIRE TURNS MADE BY MACHINE WHERE BOTH STRANDS HAVE BEEN DEFORMED OR BENT IN WRAPPING CAN WAIVE THE 1½" REQUIREMENT, BUT THE NUMBER OF TURNS SHOULD BE MAINTAINED, AND BE AS TIGHT AS POSSIBLE.
8. SEPARATE ALL CEILING HANGING AND BRACING WIRES AT LEAST SIX INCHES (6") FROM ALL UNBRACED DUCTS, PIPES, CONDUIT, ETC. IT IS ACCEPTABLE TO ATTACH LIGHTWEIGHT ITEMS, SUCH AS SINGLE ELECTRICAL CONDUIT NOT EXCEEDING 3/4" NOMINAL DIAMETER, TO HANGER WIRES USING CONNECTORS ACCEPTABLE TO THE DIVISION OF THE STATE ARCHITECT (DSA).
9. WHEN DRILLED-IN CONCRETE ANCHORS OR SHOT-IN ANCHORS ARE USED IN REINFORCED CONCRETE FOR HANGER WIRES, 1 OUT OF 10 MUST BE FIELD TESTED FOR 200 LBS. IN TENSION. WHEN DRILLED-IN CONCRETE ANCHORS ARE USED FOR BRACING WIRES, 1 OUT OF 2 MUST BE FIELD TESTED FOR 440 LBS IN TENSION. SHOT-IN ANCHORS IN CONCRETE ARE NOT PERMITTED FOR BRACING WIRES. IF ANY SHOT-IN OR DRILLED-IN ANCHOR FAILS, SEE SECTION 1923A.3.5, TITLE 24.
10. DRILLED-IN OR SHOT-IN ANCHORS REQUIRE SPECIAL DSA APPROVAL WHEN USED IN PRESTRESSED CONCRETE.
11. PROVIDE TRAPEZE OR OTHER SUPPLEMENTARY SUPPORT MEMBERS AT OBSTRUCTIONS TO TYPICAL HANGER SPACING. PROVIDE ADDITIONAL HANGERS, STRUTS OR BRACES AS REQUIRED AT ALL CEILING BREAKS, SOFFITS OR DISCONTINUOUS AREAS. HANGER WIRES THAT ARE MORE THAN 1 IN 6 OUT OF PLUMB ARE TO HAVE COUNTERSLOPING WIRES.
12. ALL RECESSED OR DROP-IN LIGHT FIXTURES, AS WELL AS CEILING MOUNTED MECHANICAL AIR TERMINALS AND SERVICES, SHALL BE SUPPORTED DIRECTLY BY MAIN RUNNERS OR BY SUPPLEMENTAL FRAMING WHICH IS SUPPORTED BY MAIN RUNNERS AND POSITIVELY ATTACHED WITH SCREWS OR OTHER APPROVED CONNECTORS.
13. SURFACE MOUNTED FIXTURES SHALL BE ATTACHED TO A MAIN RUNNER WITH A POSITIVE CLAMPING DEVICE MADE OF MATERIAL WITH A MINIMUM OF 14 GAGE. ROTATIONAL SPRING CLAMPS DO NOT COMPLY.
14. PROVIDE BRACING ASSEMBLIES PER DETAIL AT THE FOLLOWING SPACING:

    A. FOR SCHOOL BUILDINGS, PLACE BRACING ASSEMBLIES AT A SPACING NOT MORE THAN 12' BY 12' ON CENTER.

    B. PROVIDE BRACING ASSEMBLIES AT LOCATIONS NOT MORE THAN 1/2 THE SPACINGS GIVEN ABOVE, FROM EACH PERIMETER WALL AND AT THE EDGE OF VERTICAL CEILING OFFSETS.
15. THE SLOPE OF THESE WIRES SHALL NOT EXCEED 45 DEGREES FROM THE PLANE OF THE CEILING AND SHALL BE TAUT. SPLICES IN BRACING WIRES ARE NOT TO BE PERMITTED WITHOUT SPECIAL DSA APPROVAL.

METAL WALL PANEL @ SOFFIT CORNER

SCALE: 3" = 1'-0"

10 A8.03

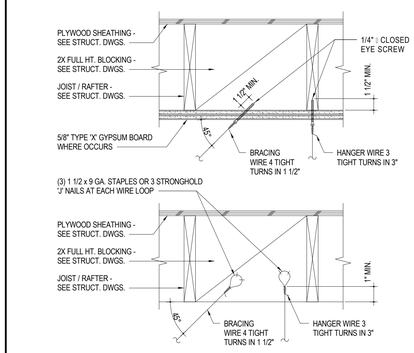

WIRE CONNECTION TO JOIST/RAFTER

SCALE: 1 1/2" = 1'-0"

8 A8.03

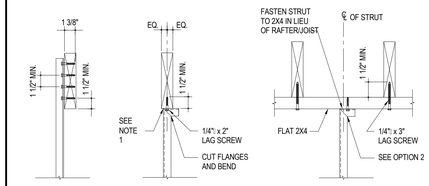

NOTES:
1. WEB OF CHANNEL TO BEAR WITHIN WIDTH OF WOOD MEMBER.
2. VERTICAL LEG OF MEMBER TO FALL WITHIN THE WIDTH OF THE WOOD MEMBER.

STRUT CONNECTION

SCALE: 1 1/2" = 1'-0"

4 A8.03

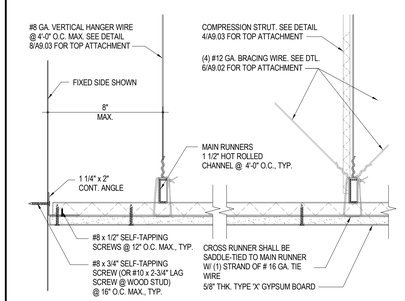

SUSP. GYP. BD.

SCALE: 3" = 1'-0"

3 A8.03

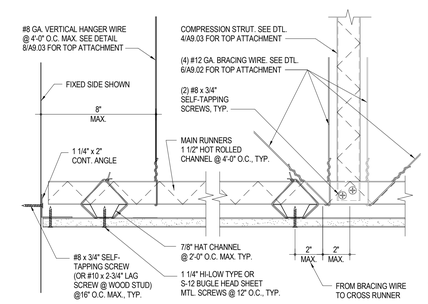

SUSP. GYP. BD.

SCALE: 3" = 1'-0"

3 A8.03

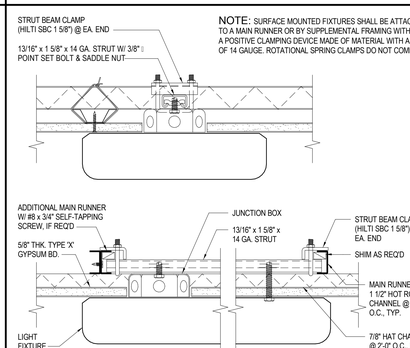

SURFACE LIGHT @ SUSP. GYP. BD.

SCALE: 3" = 1'-0"

6 A8.03

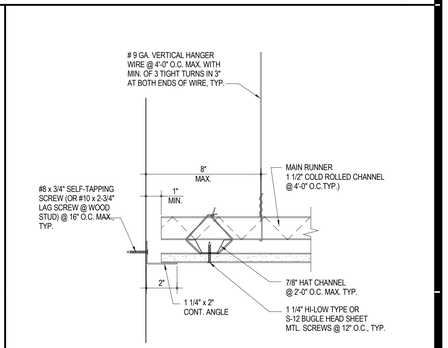

SUSP GYP BOARD FLOAT

SCALE: 3" = 1'-0"

2 A8.03

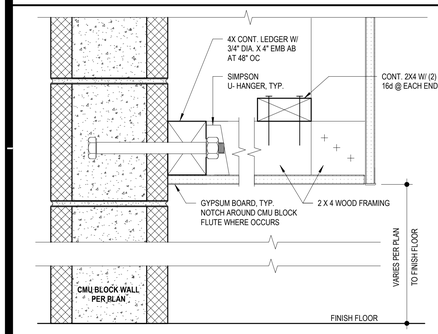

SEE 13/- FOR 2 X 4 HANGER ATTACHMENT TO ROOF STRUCTURE

WOOD FRAMED SOFFITT@ CMU BLOCK WALL

SCALE: 3" = 1'-0"

17 A8.03

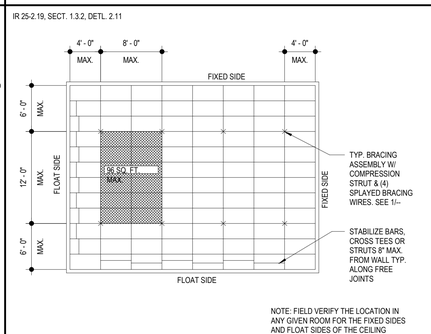

NOTE: FIELD VERIFY THE LOCATION IN ANY GIVEN ROOM FOR THE FIXED SIDES AND FLOAT SIDES OF THE CEILING SYSTEM, ENSURING THAT (2) ADJACENT SIDES ARE FIXED AND (2) ADJACENT SIDES ARE FLOAT.

TYP. BRACE FRAMING

SCALE: 1/8" = 1'-0"

13 A8.03

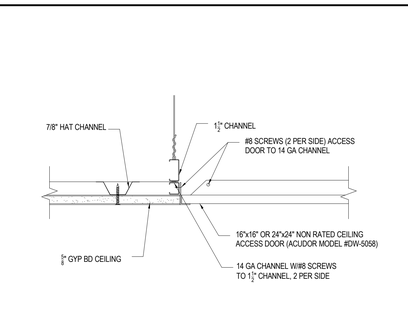

ACCESS PANEL

SCALE: 3" = 1'-0"

9 A8.03

NOTE: ALL RECESSED OR DROP-IN LIGHT FIXTURES SHALL BE SUPPORTED DIRECTLY BY MAIN RUNNERS OR BY SUPPLEMENTAL FRAMING WHICH IS SUPPORTED BY MAIN RUNNERS AND POSITIVELY ATTACHED WITH SCREW OR OTHER APPROVED CONNECTIONS

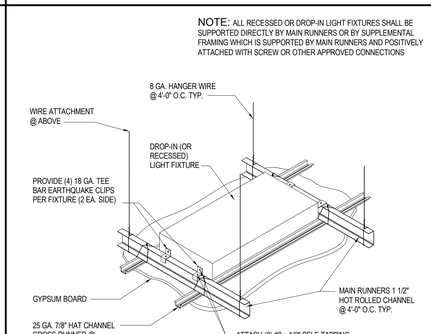

LIGHT FIXTURE @ SUSP. GYP. BD.

SCALE: 3" = 1'-0"

5 A8.03

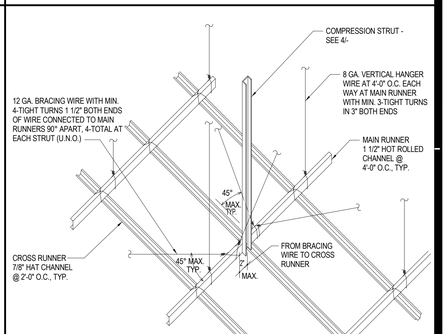

SUSP. GYP. BD. CEILING GRID SYST.

SCALE: 3" = 1'-0"

1 A8.03

AGENCY

REVIEWED FOR CODE COMPLIANCE BY: WILLDAN ENGINEERING

Approval of these plans & specifications shall not be construed to be a permit for, or an approval of any violation of any Federal, State, County or City laws or ordinances. One set of approved plans must be kept on the job until completion.

9:24:29 AM Jul 21, 2025

FLEWELLING & MOODY
architecture planning interiors

HEADQUARTERS OFFICE:
99 S. Lake Avenue, Suite 300
Pasadena, CA 91101
Phone: 323.543.8300
E-Mail: fm-pasadena@flewelling-moody.com

ANTELOPE VALLEY OFFICE:
1035 West Lancaster Boulevard
Lancaster, California 93534
Phone: 661.949.0771
E-Mail: fm-lancaster@flewelling-moody.com

An Employee Owned Corporation

ARCHITECT

LICENSED ARCHITECT — SCOTT T. CAMPBELL — C-14211 — 06/30/2025 — STATE OF CALIFORNIA

CONSULTANT

Drawn by: Author
Check by: Checker
Revisions

No.	Date	Description

All dimensions must be checked at the job by the contractor who accepts full responsibility for their accuracy under the contract. These plans & the specifications in connection therewith have been prepared for a specific site. Any and all responsibility for their use in whole or in part on any other site is hereby disclaimed by Flewelling & Moody.

CITY OF RIDGECREST

SGT. JOHN PINNEY MEMORIAL POOL REPLACEMENT PROJECT

205 S WARNER ST, RIDGECREST, CA 93555

Drawing Title

TYPICAL CEILING DETAILS

Job No. 3055-0100
Date 07/14/2025
Sheet No. **A8.03**

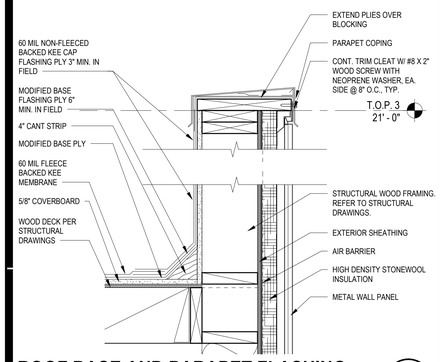

ROOF BASE AND PARAPET FLASHING

SCALE: 1 1/2" = 1'-0"

20 / A8.04

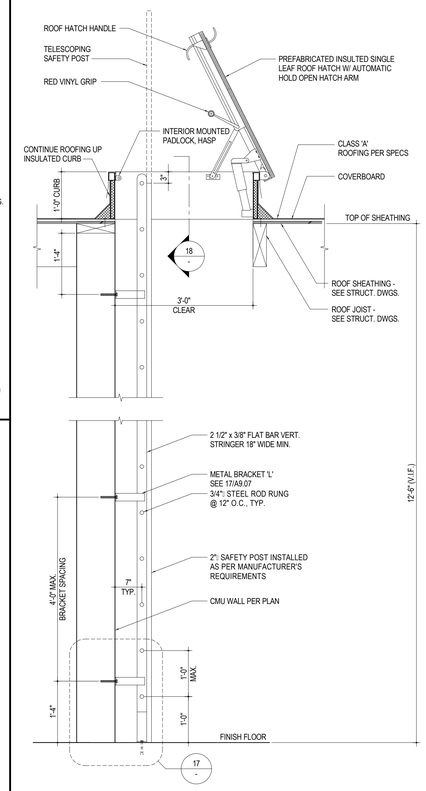

ROOF ACCESS LADDER

SCALE: 3/4" = 1'-0"

15 / A8.04

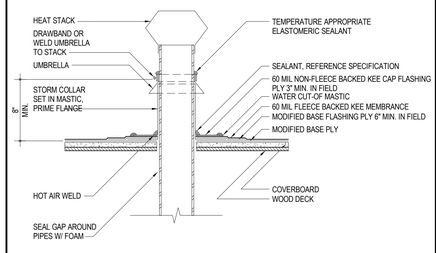

NOTE:
REFERENCE SPECIFICATION FOR MEMBRANE ADHESIVE TYPE, AND INSULATION / COVER BOARD TYPE AND ATTACHMENT METHOD

HEAT STACK

SCALE: 1 1/2" = 1'-0"

12 / A8.04

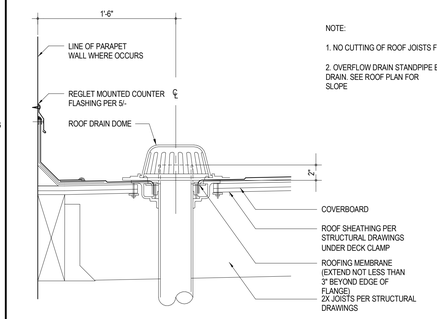

A SECTION

NOTE:

1. NO CUTTING OF ROOF JOISTS FRAME OPENINGS FOR ROOF DRAINS

2. OVERFLOW DRAIN STANDPIPE EDGE 2" ABOVE STANDPIPE EDGE OF DRAIN. SEE ROOF PLAN FOR SLOPE

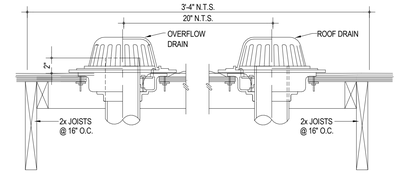

B SECTION

ROOF DRAIN SECTION

SCALE: 1 1/2" = 1'-0"

4 / A8.04

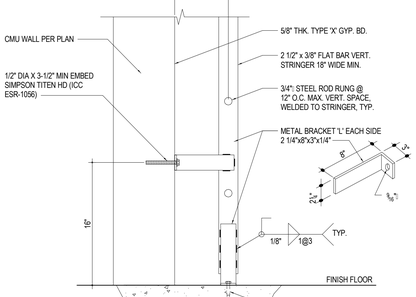

NOTE:
REFERENCE SPECIFICATION FOR MEMBRANE ADHESIVE TYPE, AND INSULATION / COVER BOARD TYPE AND ATTACHMENT METHOD

EQUIPMENT SUPPORT

SCALE: 1 1/2" = 1'-0"

19 / A8.04

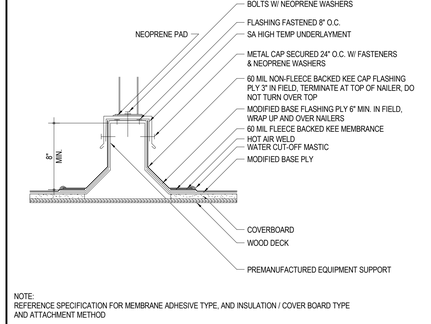

NOTE:
REFERENCE SPECIFICATION FOR MEMBRANE ADHESIVE TYPE, AND INSULATION / COVER BOARD TYPE AND ATTACHMENT METHOD

PIPE HOUSING

SCALE: 1 1/2" = 1'-0"

11 / A8.04

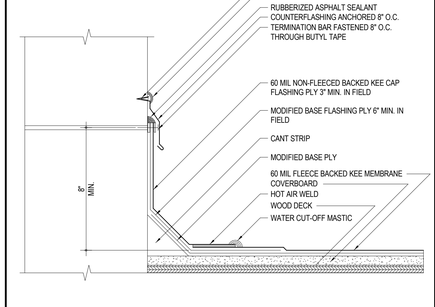

NOTE:
ALL PLIES MUST BE SET IN APPROVED ADHESIVE

THROUGH ROOF PLENUM

SCALE: 1 1/2" = 1'-0"

7 / A8.04

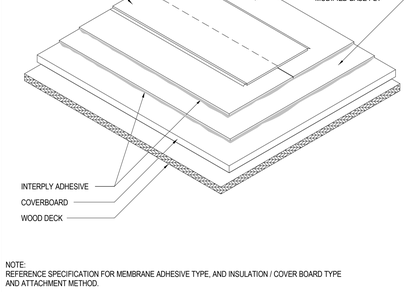

ROOF DRAIN PLAN

SCALE: 1" = 1'-0"

3 / A8.04

ROOF ACCESS LADDER - TOP

SCALE: 3/4" = 1'-0"

18 / A8.04

NOTE:
REFERENCE SPECIFICATION FOR MEMBRANE ADHESIVE TYPE, AND INSULATION / COVER BOARD TYPE AND ATTACHMENT METHOD

EXHAUST FAN

SCALE: 1 1/2" = 1'-0"

14 / A8.04

REFERENCE SPECIFICATION FOR MEMBRANE ADHESIVE TYPE, AND INSULATION / COVER BOARD TYPE AND ATTACHMENT METHOD

PLUMBING STACK

SCALE: 1 1/2" = 1'-0"

10 / A8.04

PARAPET COPING (CMU)

SCALE: 3" = 1'-0"

6 / A8.04

NOTE:
REFERENCE SPECIFICATION FOR MEMBRANE ADHESIVE TYPE, AND INSULATION / COVER BOARD TYPE AND ATTACHMENT METHOD

EXPANSION JOINT

SCALE: 1 1/2" = 1'-0"

2 / A8.04

ROOF ACCESS LADDER - BOT

SCALE: 1 1/2" = 1'-0"

17 / A8.04

NOTE:
REFERENCE SPECIFICATION FOR MEMBRANE ADHESIVE TYPE, AND INSULATION / COVER BOARD TYPE AND ATTACHMENT METHOD

PASSIVE AIR VENT INTAKE

SCALE: 1 1/2" = 1'-0"

13 / A8.04

NOTE:
REFERENCE SPECIFICATION FOR MEMBRANE ADHESIVE TYPE, AND INSULATION / COVER BOARD TYPE AND ATTACHMENT METHOD

EQUIPMENT SUPPORT PREMAN

SCALE: 1 1/2" = 1'-0"

9 / A8.04

NOTE: ALL PLIES SET IN BITUMEN SEE SPECS FOR SURFACING

REGLET MOUNTED COUNTERFLASHING

SCALE: 3" = 1'-0"

5 / A8.04

NOTE:
REFERENCE SPECIFICATION FOR MEMBRANE ADHESIVE TYPE, AND INSULATION / COVER BOARD TYPE AND ATTACHMENT METHOD.

ROOF SYSTEM SURFACE

SCALE: 3" = 1'-0"

1 / A8.04

AGENCY

REVIEWED FOR CODE COMPLIANCE BY: WILLDAN ENGINEERING

Approval of these plans & specifications shall not be construed to be a permit for, or an approval of any violation of any Federal, State, County or City laws or ordinances. One set of approved plans must be kept on the job until completion.

9:24:30 AM Jul 21, 2025

FLEWELLING & MOODY
architecture planning interiors

HEADQUARTERS OFFICE:
99 S. Lake Avenue, Suite 300
Pasadena, CA 91101
Phone: 323.543.8300
E-Mail: fm-pasadena@flewelling-moody.com

ANTELOPE VALLEY OFFICE:
1035 West Lancaster Boulevard
Lancaster, California 93534
Phone: 661.949.0771
E-Mail: fm-lancaster@flewelling-moody.com

An Employee Owned Corporation

ARCHITECT

LICENSED ARCHITECT — MATTHEW T. GARDNER — C-14211 — 06/30/2025 — STATE OF CALIFORNIA

CONSULTANT

Drawn by: Author

Check by: Checker

Revisions

No.	Date	Description

All dimensions must be checked at the job by the contractor who accepts full responsibility for their accuracy under the contract. These plans & the specifications in connection therewith have been prepared for a specific site. Any and all responsibility for their use in whole or in part on any other site is hereby disclaimed by Flewelling & Moody.

CITY OF RIDGECREST

SGT. JOHN PINNEY MEMORIAL POOL REPLACEMENT PROJECT

205 S WARNER ST, RIDGECREST, CA 93555

Drawing Title

TYPICAL ROOF DETAILS

Job No. 3055-0100

Date 07/14/2025

Sheet No. **A8.04**

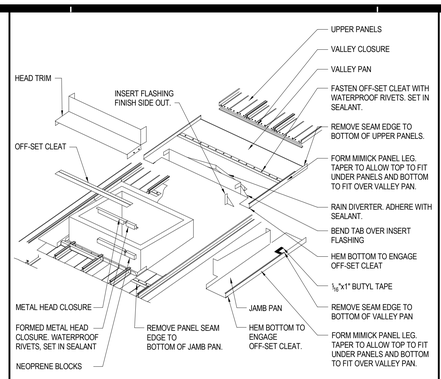

STANDING SEAM ROOF AROUND CURBS

SCALE: 3" = 1'-0"

12 / A8.05

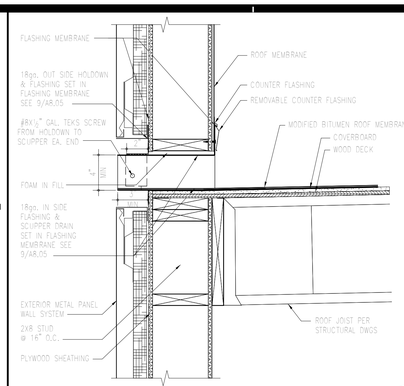

THROUGH ROOF SCUPPER

SCALE: 1 1/2" = 1'-0"

8 / A8.05

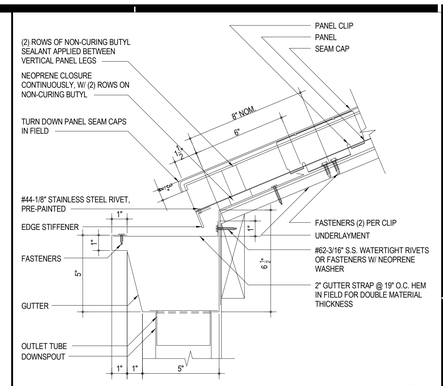

EXPANDING EAVE FLANGED GUTTER

SCALE: 3" = 1'-0"

4 / A8.05

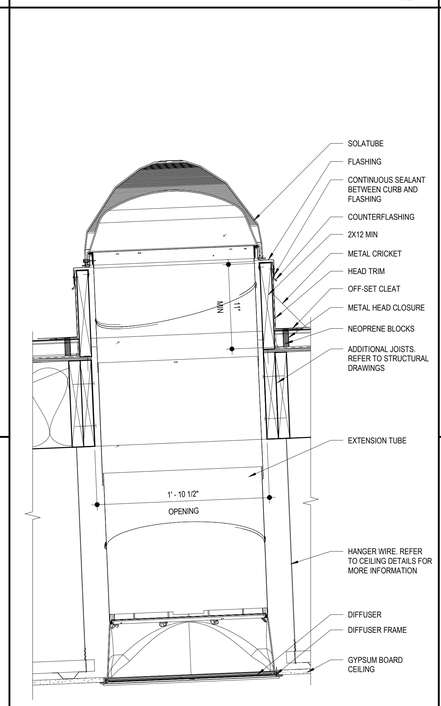

NOTE:
THE PURPOSE OF THIS DETAIL IS TO ILLUSTRATE WATERPROOFING AND FLASHING ONLY.
FOR ADDITIONAL INFORMATION, REFER TO STRUCTURAL DRAWINGS AND MECHANICAL DRAWINGS.

SOLATUBE FRAMING AND FLASHING

SCALE: 1 1/2" = 1'-0"

10 / A8.05

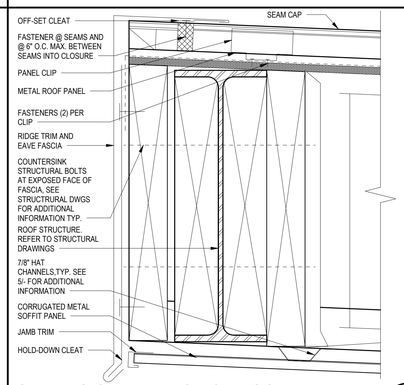

STNDNG SEAM RIDGE & FASCIA DETAIL

SCALE: 3" = 1'-0"

7 / A8.05

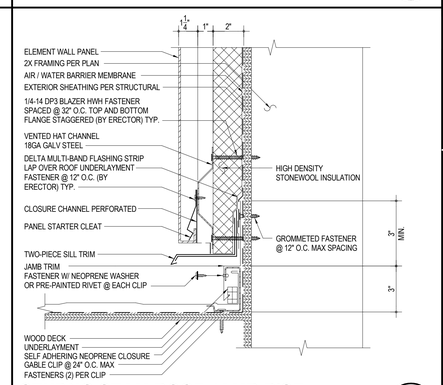

STNDNG SEAM ROOF JAMB RISE

SCALE: 3" = 1'-0"

3 / A8.05

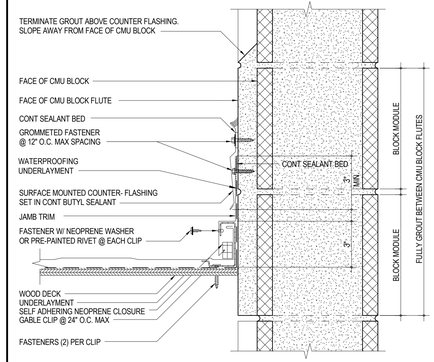

STNDNG SEAM ROOF JAMB RISE @ CMU

SCALE: 3" = 1'-0"

2 / A8.05

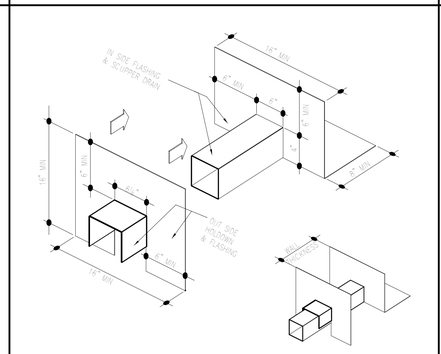

SCUPPER DRAIN AND FLASHING

SCALE: 1 1/2" = 1'-0"

9 / A8.05

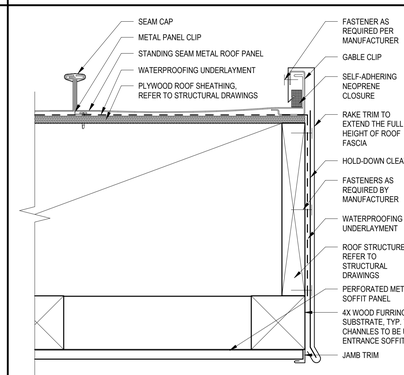

STANDNG SEAM RAKE & FASCIA DETAIL

SCALE: 3" = 1'-0"

5 / A8.05

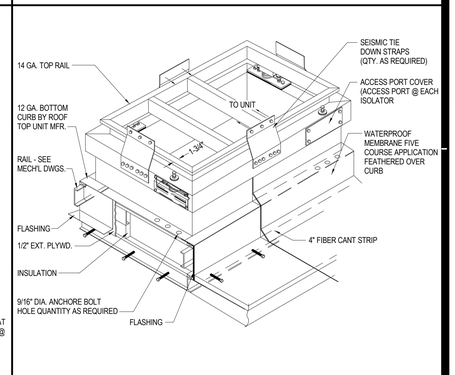

MECHANICAL CURB

SCALE: 3" = 1'-0"

1 / A8.05

AGENCY

REVIEWED FOR CODE COMPLIANCE BY: WILLDAN ENGINEERING

Approval of these plans & specifications shall not be construed to be a permit for, or an approval of any violation of any Federal, State, County or City laws or ordinances. One set of approved plans must be kept on the job until completion.

9:24:31 AM Jul 21, 2025

FLEWELLING & MOODY
architects *for* education

HEADQUARTERS OFFICE:
815 Colorado Blvd. Suite 200
Los Angeles, California 90041
323.543.8300 fax 323.543.8198
E-Mail: fm-losangeles@flewelling-

ANTELOPE VALLEY OFFICE:
1035 West Lancaster Bouldvard
Lancaster, California 93534
661.949.0771 FAX 661.949.2843
E-Mail: fm-lancaster@flewelling-

An Employee Owned Corporation

ARCHITECT

LICENSED ARCHITECT — MATTHEW T. GARDNER — C-14211 — 06/30/2025 — STATE OF CALIFORNIA

CONSULTANT

Drawn by:

Check by:

Revisions

No.	Date	Description

All dimensions must be checked at the job by the contractor who accepts full responsibility for their accuracy under the contract. These plans & the specifications in connection therewith have been prepared for a specific site. Any and all responsibility for their use in whole or in part on any other site is hereby disclaimed by Flewelling & Moody.

CITY OF RIDGECREST

REPLACEMENT PROJECT

205 S WARNER ST, RIDGECREST, CA 93555

Drawing Title

TYPICAL ROOF DETAILS

Job No. 3055-0100

Sheet No. A8.05

Date 07/14/2025

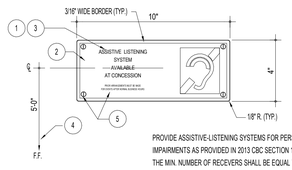

PROVIDE ASSISTIVE-LISTENING SYSTEMS FOR PERSONS WITH HEARING IMPAIRMENTS AS PROVIDED IN 2013 CBC SECTION 11B-219
THE MIN. NUMBER OF RECEIVERS SHALL BE EQUAL TO 4% OF THE SEATING, BUT NOT LEES THAN TWO,
ALL ASSEMBLY AREAS, CONFERENCE AND MEETING ROOMS. THE SIGN SHALL INCLUDE " ASSISTIVE-LISTENING SYSTEM AVAILABLE"

1. CHARACTER TYPE & SIZE: SHALL BE PAINTED 5/8" MIN. & 2" MAX. HIGH
2. FINISH AND CONTRAST: CONTRAST BETWEEN CHARACTERS, SYMBOLS AND THEIR BACKGROUND MUST BE 70% MIN. AND HAVE A NON-GLARE FINISH. 11B-703.5.1
3. PROPORTIONS: SEE DETAIL 1/-
4. SIGN MOUNTING: SEE 3A/-
5. SIGN THICKNESS: SIGN MATERIAL TO BE 1/8" THK PLASTIC AND PROVIDE MACHANICAL MOUNTING W/VANDAL-RESISTANT FASTENERS COMPLY W/ ARTICLE 4.30 BCA4.3-0 OF THE ADA

NOTE: FOR MORE INFORMATION SEE SIGNAGE NOTES 1/-

ASSISTIVE LISTENING SIGNAGE

AL

SCALE : N.T.S.
XR-SCALE 3" = 1'-0"

PROJECT NUMBER =
DETAIL IDEN. =
SHEET REFERENCE = 9/pm

12 A8.06

DIMENSIONS FOR ACCESSIBILITY IN TOILET FACILITIES:

	'A' RANGE (AGES 12+)	'B' RANGE (AGES 9-12)	'C' RANGE (AGES 5-8)	'D' RANGE (AGES 3-4)
TOILET CENTER LINE FROM WALL	17"-18"	15"-18"	12-15"	12"
TOILET SEAT HEIGHT	17"-19"	15-17"	12"-15"	11"-12"
GRAB BAR HEIGHT (TOP OF SURFACE)	33"-36"	25-27"	20"-25"	18"-20"
TOILET PAPER IN FRONT OF TOILET	7"-9"	7"-9"	7"-9"	7"-9"
TOILET PAPER ABOVE FLOOR	19" MIN.	14"-17"	14"-17"	14"
NAPKIN DISPOSAL ON SIDEWALL	19" MIN.	12" MAX.	N/A	N/A
DISPENSER OR BOTTOM OF REFLECTIVE SURFACE	40" MAX.	36" MAX.	32" MAX.	32" MAX.
LAVATORY/SINK TOP HEIGHT	34" MAX.	31" MAX.	24" MAX.	24" MAX.
LAVATORY/SINK KNEE CLEARANCE	27" MIN.	24" MIN.	19" MIN.	19" MIN.
LAVATORY APRON CLEAR	29" MIN.			
URINAL LIP HEIGHT	17" MAX.	15" MAX.	13" MIN.	13" MIN.
URINAL FLUSH HANDLE HEIGHT	44" MAX.	37" MAX.	32" MAX.	32" MAX.

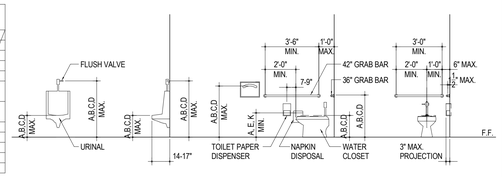

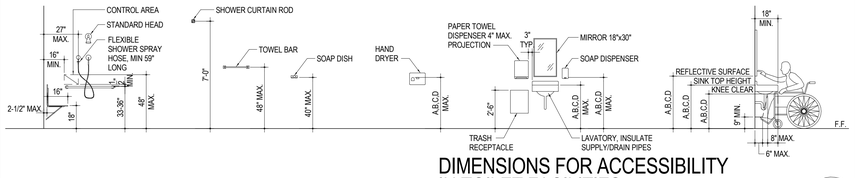

DIMENSIONS FOR ACCESSIBILITY IN TOILET FACILITIES

SCALE : 1/4"=1'-0"

PROJECT NUMBER =
DETAIL IDEN. =
SHEET REFERENCE =

4 A8.06

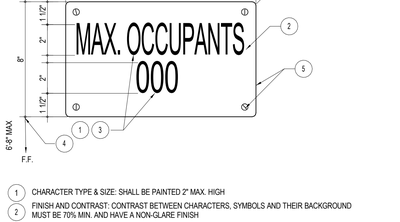

1. CHARACTER TYPE: CHARACTERS ON SIGNS SHALL BE RAISED 1/32"
2. CHARACTER SIZE: 5/8"-2" HIGH, UPPER CASE
3. FINISH AND CONTRAST: CONTRAST BETWEEN CHARACTERS, SYMBOLS AND THEIR BACKGROUND MUST BE 70% MIN. AND HAVE A NON-GLARE FINISH
4. PROPORTIONS: SEE DETAIL 1/-
5. BRAILLE: CALIFORNIA GRADE 2 BRAILLE SHALL BE USED. SEE 1/-
6. SIGN MOUNTING: SEE 2A/- AND SHALL COMPLY WITH 11B-703.4
7. SIGN TO HAVE WHITE FIGURE AND BORDER WITH BLUE BACKGROUND
8. SIGN THICKNESS: SIGN MATERIAL TO BE 16ga. THK. MTL., PROVIDE MECHANICAL MOUNTING W/VANDAL-RESISTANT FASTENERS.

NOTE: FOR MORE INFORMATION SEE SIGNAGE NOTES 1/-

BUILDING ID. SIGN (ACCESSIBLE)

BI

SCALE : 3"=1'-0"

PROJECT NUMBER =
DETAIL IDEN. =
SHEET REFERENCE =

15 A8.06

1. CHARACTER TYPE: CHARACTERS ON SIGNS SHALL BE RAISED 1/32"
2. CHARACTER SIZE: 5/8"-2" HIGH.
3. FINISH AND CONTRAST: CONTRAST BETWEEN CHARACTERS, SYMBOLS AND THEIR BACKGROUND MUST BE 70% MIN. AND HAVE A NON-GLARE FINISH
4. PROPORTIONS: SEE DETAIL 1/-
5. BRAILLE: CALIFORNIA GRADE 2 BRAILLE SHALL BE USED. SEE 1/-
6. SIGN MOUNTING: SEE 3A/- AND SHALL COMPLY WITH 11B-703.4
7. SIGN THICKNESS: SIGN MATERIAL TO BE 1/8" THK. PLASTIC, PROVIDE MECHANICAL MOUNTING W/VANDAL-RESISTANT FASTENERS.
8. SIGN SHALL BE INSTALLED AT THE INTERIOR LATCH SIDE OF ALL DOORS EXITING TO THE BUILDING'S EXTERIOR.
9. MOUNTING HEIGHT SHALL BE 60" A.F.F. TO BASELINE OF HIGHEST LINE OF RAISED CHARACTERS AND MIN. 48" A.F.F. TO BASELINE OF LOWEST LINE OF BRAILLE.

NOTE: FOR MORE INFORMATION SEE SIGNAGE NOTES 1/-

EXIT ROUTE SIGN (ACCESSIBLE)

ER

SCALE : 3"=1'-0"

PROJECT NUMBER =
DETAIL IDEN. =
SHEET REFERENCE =

11 A8.06

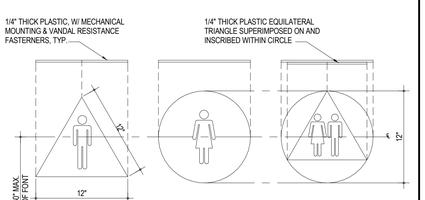

1. CHARACTER TYPE: CHARACTERS ON SIGNS SHALL BE RAISED 1/32"
2. CHARACTER SIZE: 5/8"-2" HIGH, UPPER CASE
3. FINISH AND CONTRAST: CONTRAST BETWEEN CHARACTERS, SYMBOLS AND THEIR BACKGROUND MUST BE 70% MIN. AND HAVE A NON-GLARE FINISH. 11B-703.5.1
4. PROPORTIONS: SEE DETAIL 1/-
5. BRAILLE: CALIFORNIA GRADE 2 BRAILLE SHALL BE USED
6. SIGN MOUNTING: SEE 3/- AND SHALL COMPLY WITH 11B-703.4. PROVIDE BACKER PLATE BEHIND WHEN MOUNTED ON GLASS, OR EXIT SIGN AS BACKER PLATE WHERE OCCURS
7. SIGN THICKNESS: SIGN MATERIAL TO BE 1/8" THK. PLASTIC, PROVIDE MECHANICAL MOUNTING W/ VANDAL-RESISTANT FASTENERS

NOTES:
1. FOR ADDITIONAL INFORMATION, SEE 1/-
2. MOUNTING HEIGHT SHALL BE MAXIMUM 60" A.F.F TO BASELINE OF HIGHEST LINE OF RAISED CHARACTERS AND MINIMUM 48" A.F.F TO BASELINE OF LOWEST LINE OF BRAILLE.

ROOM IDENTIFICATION SIGN/ ROOM NUMBERS SIGN (ACCESIBLE)

RI

SCALE : 3" = 1'-0"

PROJECT NUMBER =
DETAIL IDEN. =
SHEET REFERENCE =

7 A8.06

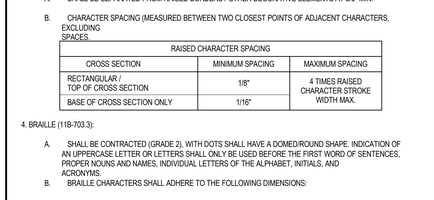

NOTES:
1. SOME DOORS MAY ALREADY HAVE PARTIAL SIGNAGE. PROVIDE ADDITIONAL SIGNAGE TO MEET REQUIREMENTS OF THIS DETAIL.
2. PERMANENT SIGNAGE TO BE INSTALLED ON THE WALL ADJACENT TO THE LATCH SIDE OF THE DOOR. MOUNTING LOCATION MUST ALLOW A PERSON TO APPROACH WITHIN 3" OF SIGN WITHOUT ENCOUNTERING PROTRUDING OBJECTS OR STANDING WITHIN THE SWING PATH OF ANY DOOR.
3. VISUAL SIGNAGE SHALL COMPLY WITH 11B-703.5 AND TABLE 11B.703.5.5
4. IF ANY SIGNAGE TO BE SUSPENDED FROM CEILING SPACE, THE CLEARANCE BELOW MUST BE 80".

DOOR & WALL SIGN MOUNTING

SCALE : N.T.S.
XR-SCALE 3" = 1'-0"

PROJECT NUMBER =
DETAIL IDEN. =
SHEET REFERENCE =

3 A8.06

1. CHARACTER TYPE: CHARACTERS ON SIGNS SHALL BE PAINTED
2. FINISH AND CONTRAST: CONTRAST BETWEEN CHARACTERS, SYMBOLS AND THEIR BACKGROUND MUST BE 70% MIN. AND HAVE A NON-GLARE FINISH
3. PROPORTIONS: SEE C
4. SIGN MOUNTING: SEE 3A/-
5. SIGN THICKNESS: SIGN MATERIAL TO BE 1/8" THK. PLASTIC, PROVIDE MECHANICAL MOUNTING W/VANDAL-RESISTANT FASTENERS.
6. SIGN TO HAVE WHITE FIGURE AND BORDER WITH BLUE BACKGROUND OR OTHERWISE NOTED

NOTE: FOR MORE INFORMATION SEE SIGNAGE NOTES 1/-

INTERNATION SYMBOL OF ACCESSIBILITY

ISA

SCALE : 3" = 1'-0"

PROJECT NUMBER =
DETAIL IDEN. =
SHEET REFERENCE =

14 A8.06

1. CHARACTER TYPE: CHARACTERS ON SIGNS SHALL BE RAISED 1/32"
2. CHARACTER SIZE: 5/8"-2" HIGH.
3. FINISH AND CONTRAST: CONTRAST BETWEEN CHARACTERS, SYMBOLS AND THEIR BACKGROUND MUST BE 70% MIN. AND HAVE A NON-GLARE FINISH
4. PROPORTIONS: SEE DETAIL 1/-
5. BRAILLE: CALIFORNIA GRADE 2 BRAILLE SHALL BE USED. SEE 1/-
6. SIGN MOUNTING: SEE 3A/- AND SHALL COMPLY WITH 11B-703.4
7. SIGN THICKNESS: SIGN MATERIAL TO BE 1/8" THK. PLASTIC, PROVIDE MECHANICAL MOUNTING W/VANDAL-RESISTANT FASTENERS.
8. SIGN SHALL BE INSTALLED AT THE INTERIOR LATCH SIDE OF ALL DOORS EXITING TO THE BUILDING'S EXTERIOR.
9. MOUNTING HEIGHT SHALL BE 60" A.F.F. TO BASELINE OF HIGHEST LINE OF RAISED CHARACTERS AND MIN. 48" A.F.F. TO BASELINE OF LOWEST LINE OF BRAILLE.

NOTE: FOR MORE INFORMATION SEE SIGNAGE NOTES 1/-

EXIT SIGN (ACCESSIBLE)

E

SCALE : 3"=1'-0"

PROJECT NUMBER =
DETAIL IDEN. =
SHEET REFERENCE =

10 A8.06

NOTES:
1. FOR ADDITIONAL INFORMATION, SEE 1/-
2. MOUNTING HEIGHT SHALL BE MAXIMUM 60" A.F.F TO BASELINE OF HIGHEST LINE OF RAISED CHARACTERS AND MINIMUM 48" A.F.F TO BASELINE OF LOWEST LINE OF BRAILLE.

TOILET ROOM WALL SYMBOL

TWS

SCALE : 3" = 1'-0"

PROJECT NUMBER =
DETAIL IDEN. =
SHEET REFERENCE =

6 A8.06

2019 CBC 11B-703

REFER TO CBC 11B-703 FOR A COMPLETE LIST OF SIGNAGE REQUIREMENTS.

1. GENERAL CHARACTER PROPERTIES.

PROPERTY	RAISED CHARACTER	VISUAL CHARACTER
STYLE	HORIZONTAL, SAN SERIF	
CASE	UPPERCASE	UPPERCASE, LOWERCASE, OR COMBINATION
HEIGHT	5/8" TO 2"	SEE NOTE 2
DEPTH	1/32" MIN. ABOVE THEIR BACKGROUND	-
STROKE THICKNESS	15% MAX. OF LETTER "I" HEIGHT	10% TO 20% OF LETTER "I" HEIGHT
CHARACTER SPACING	SEE NOTE 3.B	10% TO 35% OF CHARACTER HEIGHT
LINE SPACING	135% - 170% OF CHARACTER HEIGHT	
PROPORTION	LETTER "O" WIDTH BETWEEN 60%-110% OF LETTER "I" HEIGHT	
SIGN FINISH	COLOR CONTRAST BETWEEN CHARACTERS, SYMBOLS, THEIR BACKGROUND, AND SHALL HAVE NON-GLARE FINISH	

2. VISUAL CHARACTER ADDITIONAL PROPERTIES (11B-703.5):

VISUAL CHARACTER HEIGHT		
HEIGHT FROM FINISH FLOOR / GROUND FROM BASELINE OF CHARACTER:	HORIZONTAL VIEWING DISTANCE	MINIMUM CHARACTER HEIGHT
40" OR LESS	NP	NP
40" TO 70"	72" OR LESS	5/8"
	72" OR GREATER	ADD 1/8" PER FOOT
GREATER THAN 70" TO 120"	180" OR LESS	2"
	180" OR GREATER	ADD 1/8" PER FOOT
GREATER THAN 120" OR MORE	21'-0" OR LESS	3"
	21'-0" OR GREATER	ADD 1/8" PER FOOT

3. RAISED CHARACTER ADDITIONAL PROPERTIES (11B-703.2):

A. SHALL BE SEPARATED FROM RAISED BORDERS / OTHER DECORATIVE ELEMENTS AT 3/8" MIN.

B. CHARACTER SPACING (MEASURED BETWEEN TWO CLOSEST POINTS OF ADJACENT CHARACTERS, EXCLUDING SPACES.

RAISED CHARACTER SPACING		
CROSS SECTION	MINIMUM SPACING	MAXIMUM SPACING
RECTANGULAR / TOP OF CROSS SECTION	1/8"	4 TIMES RAISED CHARACTER STROKE WIDTH MAX.
BASE OF CROSS SECTION ONLY	1/16"	

4. BRAILLE (11B-703.3):

A. SHALL BE CONTRACTED (GRADE 2), WITH DOTS SHALL HAVE A DOMED/ROUND SHAPE. INDICATION OF AN UPPERCASE LETTER OR LETTERS SHALL ONLY BE USED BEFORE THE FIRST WORD OF SENTENCES, PROPER NOUNS AND NAMES, INDIVIDUAL LETTERS OF THE ALPHABET, INITIALS, AND ACRONYMS.

B. BRAILLE CHARACTERS SHALL ADHERE TO THE FOLLOWING DIMENSIONS:

SIGNAGE NOTES

SCALE : N.T.S.

PROJECT NUMBER =
DETAIL IDEN. =
SHEET REFERENCE =

1 A8.06

1. CHARACTER TYPE & SIZE: SHALL BE PAINTED 2" MAX. HIGH
2. FINISH AND CONTRAST: CONTRAST BETWEEN CHARACTERS, SYMBOLS AND THEIR BACKGROUND MUST BE 70% MIN. AND HAVE A NON-GLARE FINISH
3. PROPORTIONS: SEE DETAIL 1/-
4. SIGN MOUNTING : SEE 3A/-
5. SIGN THICKNESS : SIGN MATERIAL TO BE 1/8" THK PLASTIC AND PROVIDE MECHANICAL MOUNTING W/VANDAL-RESISTANT FASTENERS.
6. MAXIMUM OCCUPANT LOAD : SEE SHEET A1.02 FOR OCCUPANT LOAD NUMBER

NOTE: FOR MORE INFORMATION SEE SIGNAGE NOTES 1/-

MAXIMUM OCCUPANCY SIGN

MO

SCALE : 3"=1'-0"

PROJECT NUMBER =
DETAIL IDEN. =
SHEET REFERENCE =

13 A8.06

DISABLED ACCESS DIRECTIONAL SIGN

SCALE : N.T.S.

PROJECT NUMBER =
DETAIL IDEN. =
SHEET REFERENCE =

9 A8.06

NOTE: FOR ADDITIONAL INFORMATION, SEE 1/- AND 3/-

TOILET ROOM DOOR SYMBOL

TDS

SCALE : 1-1/2" = 1'-0"

PROJECT NUMBER =
DETAIL IDEN. =
SHEET REFERENCE =

5 A8.06

AGENCY

REVIEWED FOR CODE COMPLIANCE BY: WILLDAN ENGINEERING

Approval of these plans & specifications shall not be construed to be a permit for, or an approval of any violation of any Federal, State, County or City laws or ordinances. One set of approved plans must be kept on the job until completion.

9:24:33 AM Jul 21, 2025

FLEWELLING & MOODY
architecture planning interiors

HEADQUARTERS OFFICE:
99 S. Lake Avenue, Suite 300
Pasadena, CA 91101
Phone: 323.543.8300
E-Mail: fm-pasadena@flewelling-moody.com

ANTELOPE VALLEY OFFICE:
1035 West Lancaster Bouldvard
Lancaster, California 93534
Phone: 661.949.0771
E-Mail: fm-lancaster@flewelling-moody.com

An Employee Owned Corporation

ARCHITECT

LICENSED ARCHITECT — MATTHEW T. GARDNER — C-14211 — 06/30/2025 — STATE OF CALIFORNIA

CONSULTANT

Drawn by: Author
Check by: Checker
Revisions

No.	Date	Description

All dimensions must be checked at the job by the contractor who accepts full responsibility for their accuracy under the contract. These plans & the specifications in connection therewith have been prepared for a specific site. Any and all responsibility for their use in whole or in part on any other site is hereby disclaimed by Flewelling & Moody.

CITY OF RIDGECREST

SGT. JOHN PINNEY MEMORIAL POOL REPLACEMENT PROJECT

205 S WARNER ST, RIDGECREST, CA 93555

Drawing Title

ACCESSIBILITY AND SIGNAGE DETAILS

Job No. 3055-0100

Sheet No. **A8.06**

Date 07/14/2025

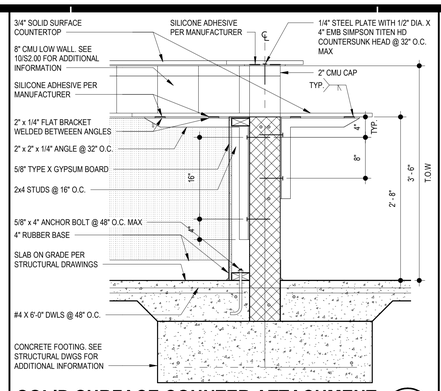

SOLID SURFACE COUNTER ATTACHMENT

SCALE: 1" = 1'-0"

12 / A8.07

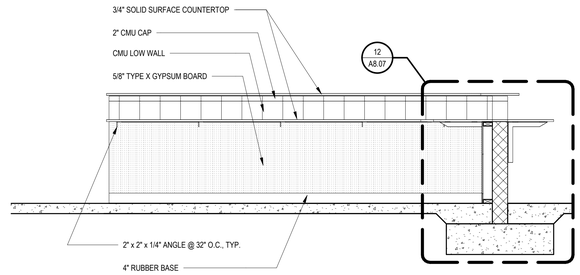

RECEPTION DESK SECTION 1

SCALE: 1/2" = 1'-0"

4 / A8.07

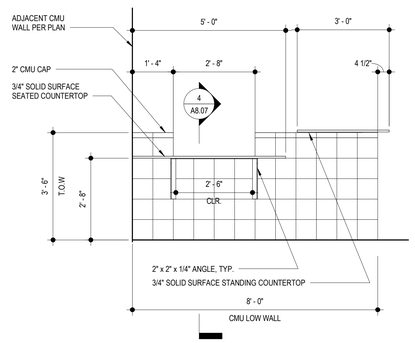

RECEPTION DESK SIDE ELEVATION

SCALE: 1/2" = 1'-0"

11 / A8.07

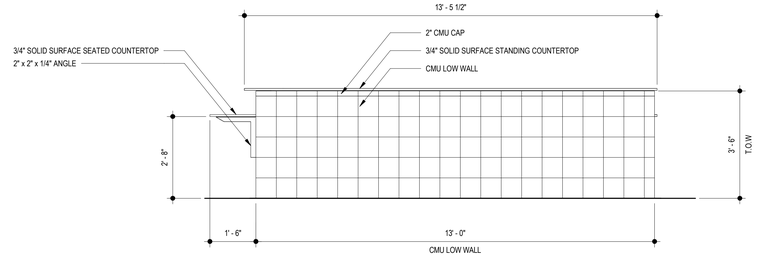

RECEPTION DESK FRONT ELEVATION

SCALE: 1/2" = 1'-0"

3 / A8.07

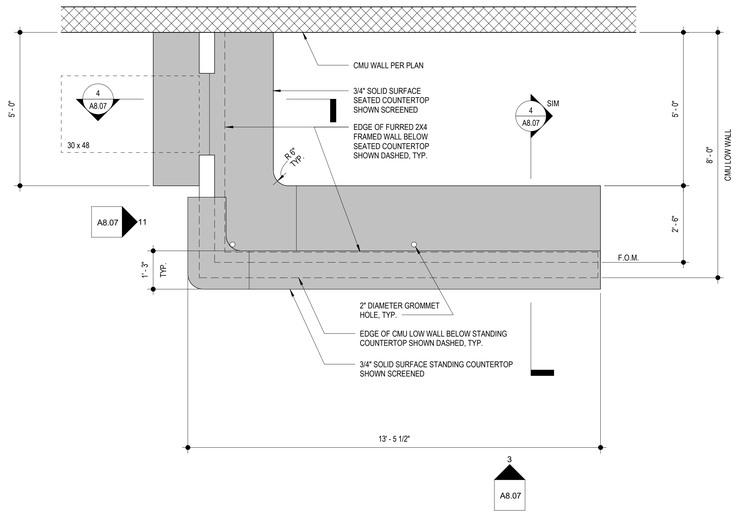

RECEPTION DESK ENLARGED PLAN

SCALE: 1/2" = 1'-0"

1 / A8.07

AGENCY

REVIEWED FOR CODE COMPLIANCE BY: WILLDAN ENGINEERING

Approval of these plans & specifications shall not be construed to be a permit for, or an approval of any violation of any Federal, State, County or City laws or ordinances. One set of approved plans must be kept on the job until completion.

9:24:34 AM Jul 21, 2025

FLEWELLING & MOODY
architecture planning interiors

HEADQUARTERS OFFICE:
99 S. Lake Avenue, Suite 300
Pasadena, CA 91101
Phone: 323.543.8300
E-Mail: fm-pasadena@flewelling-moody.com

ANTELOPE VALLEY OFFICE:
1035 West Lancaster Boulevard
Lancaster, California 93534
Phone: 661.949.0771
E-Mail: fm-lancaster@flewelling-moody.com

An Employee Owned Corporation

ARCHITECT

LICENSED ARCHITECT — MATT T. GARD — C-14211 — 06/30/2025 — STATE OF CALIFORNIA

CONSULTANT

Drawn by: Author

Check by: Checker

Revisions

No.	Date	Description

All dimensions must be checked at the job by the contractor who accepts full responsibility for their accuracy under the contract. These plans & the specifications in connection therewith have been prepared for a specific site. Any and all responsibility for their use in whole or in part on any other site is hereby disclaimed by Flewelling & Moody.

CITY OF RIDGECREST

SGT. JOHN PINNEY MEMORIAL POOL REPLACEMENT PROJECT

205 S WARNER ST, RIDGECREST, CA 93555

Drawing Title

RECEPTION DESK PLAN & DETAILS

Job No. 3055-0100

Sheet No. **A8.07**

Date 07/14/2025

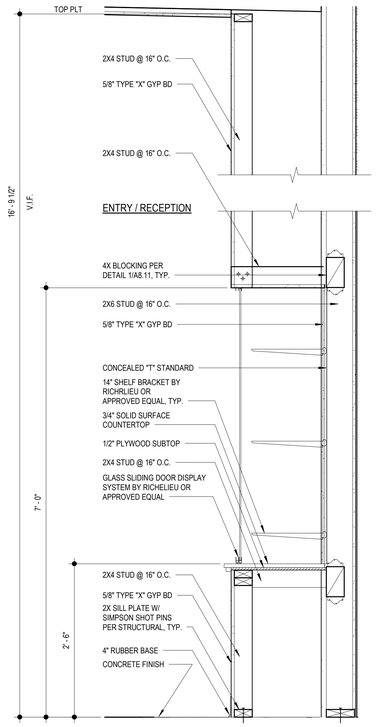

DISPLAY CABINET SECTION

SCALE: 1" = 1'-0"

15 A8.08

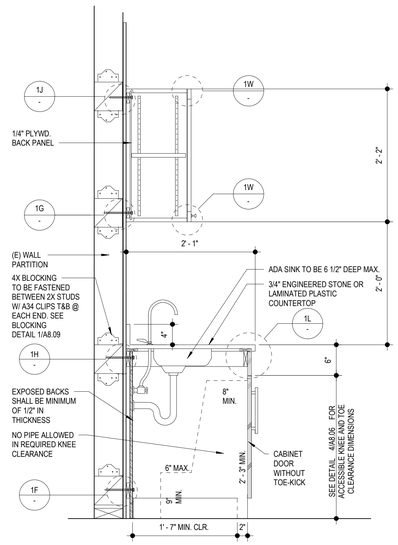

NOTE: INSULATE HOT WATER PIPE AND DRAIN

ADA SINK DETAIL

SCALE: 1" = 1'-0"

11 A8.08

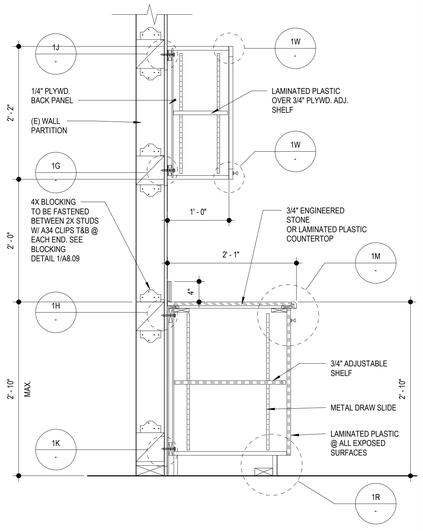

BASE & WALL HUNG CABINETS, TYP.

SCALE: 1" = 1'-0"

9 A8.08

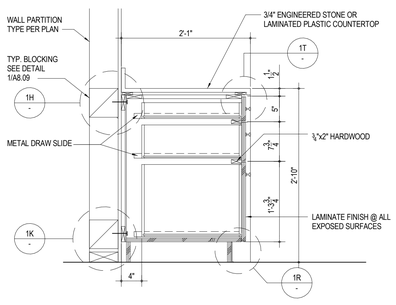

BASE CABINET WITH DRAWERS

SCALE : 1"=1'-0"

PROJECT NUMBER = DETAIL DSN. = SHEET REFERENCE =

8 A8.08

1. ALL CASEWORK SHOWN ON SCHEDULE ARE NOT NECESSARILY USED. ONLY THOSE CASEWORK ITEMS CALLED OUT ON INTERIOR ELEVATIONS AND/OR FLOOR PLANS SHALL BE USED.
2. CASEWORK NUMBERS SHOWN ON SCHEDULE ARE THOSE OF THE WOODWORK INSTITUTE MANUAL OF MILLWORK (WI), 11th EDITION-MAY1, 2003. DESIGN NUMBERING SYSTEM.
3. ALL CABINET DIMENSIONS INDICATED IN SCHEDULE ARE NOMINAL OUTSIDE DIMENSIONS.
4. ALL DIMENSIONS NOTED ON SCHEDULE ARE IN INCHES.
5. FILLER STRIPS ARE REQUIRED AT ENDS OF CABINETS WHERE CABINETS ARE ADJACENT TO WALLS.
6. ALL FILLER STRIPS AT ALL TALL AND WALL CABINETS TO HAVE TOP AND BOTTOM RETURNS.
7. HEIGHT DIMENSIONS OF BASE CABINETS INCLUDE FINISHED TOP THICKNESS OF 3/4" & SUBBASE HEIGHT OF 4" UNLESS OTHERWISE NOTED.
8. HEIGHT DIMESIONS OF APRONS INCLUDE FINISHED TOP THICKNESS OF 3/4" UNLESS OTHERWISE NOTED.
9. HEIGHT DIMENSIONS OF TOPS WITH APRONS FROM FINISHED FLOOR LINE SHALL MATCH HEIGHT LINE SHALL MATCH HEIGHT OF ADJACENT BASE CABINETS UNLESS OTHERWISE NOTED.
10. ALL PLAN DIMENSIONS OF CASEWORK ARE CABINET DIMENSIONS ONLY & DO NOT INCLUDE TOPS.
11. PROVIDE FINISHED END PANELS FOR SUPPORT OF COUNTERTOPS AT UNDERCOUNTER EQUIPMENT OR KNEE SPACES WHERE THERE IS NO ADJACENT WALL OR CABINET THAT CAN BE USED FOR SUPPORT.
12. FINISH ALL EXPOSED PORTIONS OF CASEWORK AND COUNTERTOPS.
13. ALL UNITS INCLUDING OPEN UNITS SHALL HAVE CASEWORK MANUFACTURER'S STANDARD CABINET LINER UNLESS OTHERWISE NOTED.
14. ALL TOE SPACES SHALL BE 4" IN HEIGHT AND 2" IN DEPTH AND SHALL RETURN TO WALL WHERE ENDS OF CABINETS ARE EXPOSED.
15. ALL SHELVING SHALL BE ADJUSTABLE UNLESS OTHERWISE NOTED.
16. ALL COUNTERTOPS SHALL BE OF DEPTHS AS SHOWN IN SCHEDULE AND SHALL BE OF MAXIMUM PRACTICAL LENGTHS REQUIRED TO CONFORM TO OVERALL BASE CABINET DIMENSIONS.
17. PROVIDE BACKSPLASH RETURN AT ENDS OF COUNTERTOPS WHERE ADJACENT TO WALL OR OTHER FULL HEIGHT CASEWORK.
18. ALL SINKS, SINK TRIM & ELECTRICAL ITEMS SHALL BE FURNISHED BY OTHER THAN THE CASEWORK MANUFACTURER UNLESS OTHERWISE NOTED.
19. ALL COUNTERTOPS SHALL BE 3/4" TECHSTONE ENGINEERED STONE UNLESS OTHERWISE NOTED.

CASEWORK GENERAL NOTES

SCALE: 3/32" = 1'-0"

4 A8.08

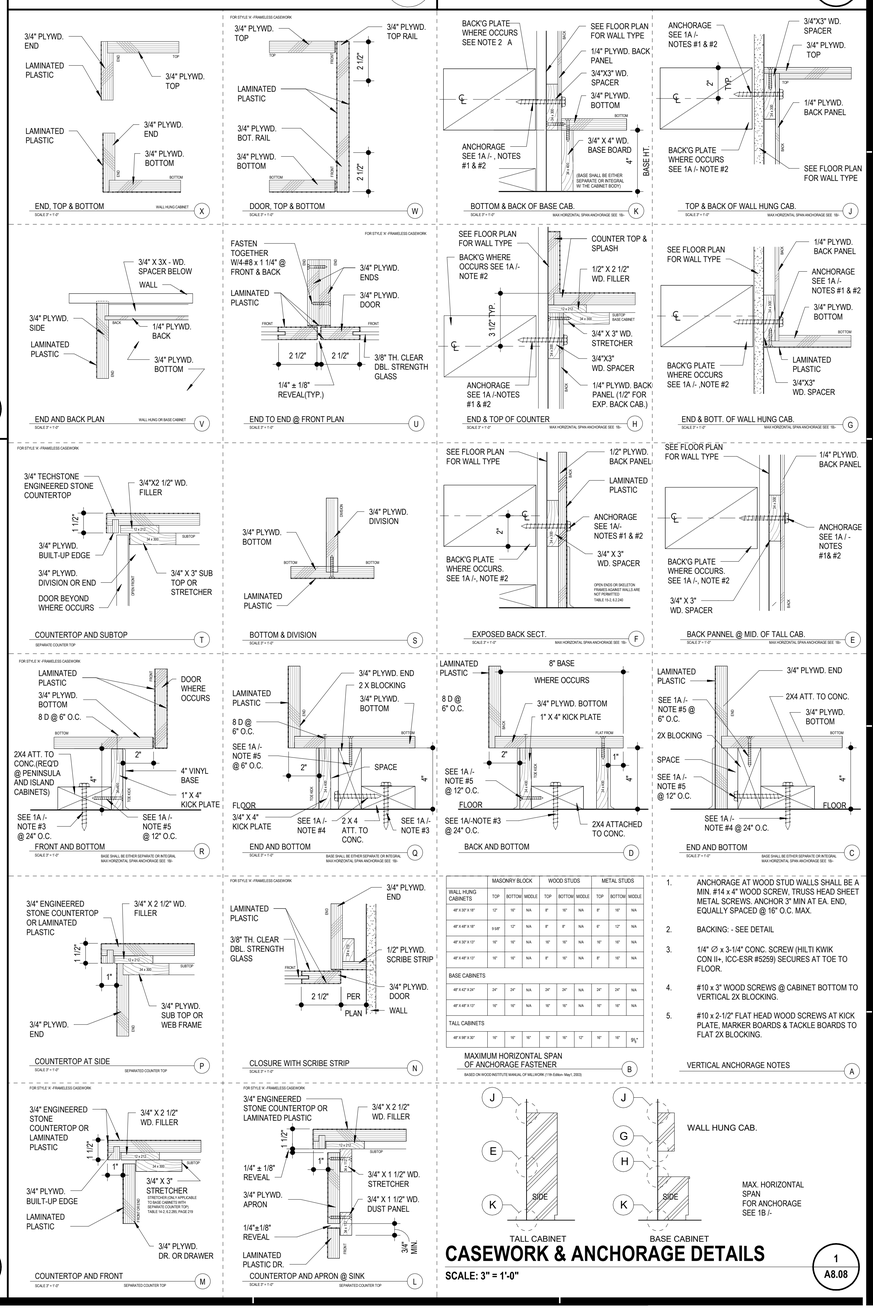

CASEWORK & ANCHORAGE DETAILS

SCALE: 3" = 1'-0"

1 A8.08

C:\Users\DSanders\Documents\3055-0000-PinneyPool-CommunityBuildingModel_dsanders3W332.rvt 5/6/2025 8:24:33 AM

AGENCY

REVIEWED FOR CODE COMPLIANCE BY: WILLDAN ENGINEERING

Approval of these plans & specifications shall not be construed to be a permit for, or an approval of any violation of any Federal, State, County or City laws or ordinances. One set of approved plans must be kept on the job until completion.

9:24:36 AM Jul 21, 2025

FLEWELLING & MOODY
architecture planning interiors

HEADQUARTERS OFFICE:
99 S. Lake Avenue, Suite 300
Pasadena, CA 91101
Phone: 323.543.8300
E-Mail: fm-pasadena@flewelling-moody.com

ANTELOPE VALLEY OFFICE:
1035 West Lancaster Boulevard
Lancaster, California 93534
Phone: 661.949.0771
E-Mail: fm-lancaster@flewelling-moody.com

An Employee Owned Corporation

ARCHITECT

LICENSED ARCHITECT MATTHEW T. GRABOW C-14211 RENEWAL 08/31/2025 STATE OF CALIFORNIA

CONSULTANT

Drawn by: Author

Check by: Checker

Revisions

No.	Date	Description

All dimensions must be checked at the job by the contractor who accepts full responsibility for their accuracy under the contract. These plans & the specifications in connection therewith have been prepared for a specific site. Any and all responsibility for their use in whole or in part on any other site is hereby disclaimed by Flewelling & Moody.

CITY OF RIDGECREST

SGT. JOHN PINNEY MEMORIAL POOL REPLACEMENT PROJECT

205 S WARNER ST, RIDGECREST, CA 93555

Drawing Title

CABINET DETAILS

Job No. 3055-0100

Date 07/14/2025

Sheet No. **A8.08**

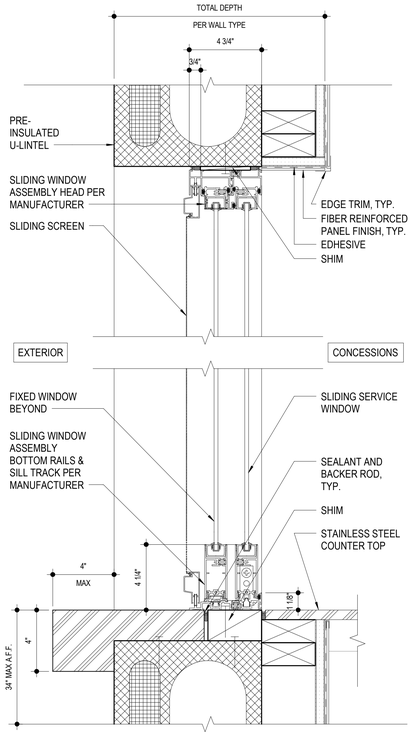

CONCESSIONS SERVICE WINDOW SECTION

SCALE: 3" = 1'-0"

15 / A8.09

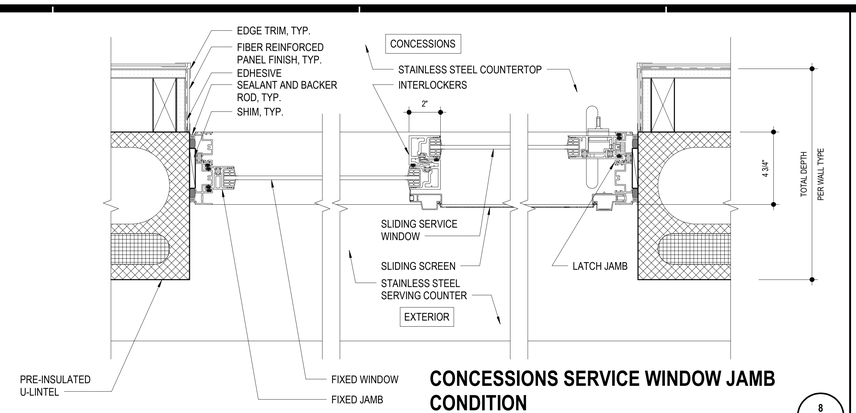

CONCESSIONS SERVICE WINDOW JAMB CONDITION

SCALE: 3" = 1'-0"

8 / A8.09

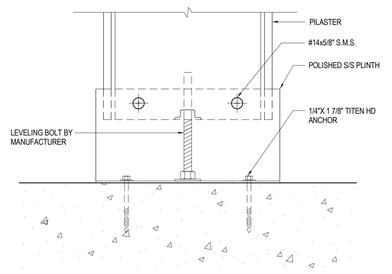

TOILET PARTITION FLOOR MOUNTING

SCALE: 3"=1'-0"

PROJECT NUMBER =
DETAIL IDEN. =
SHEET REFERENCE =

4 / A8.09

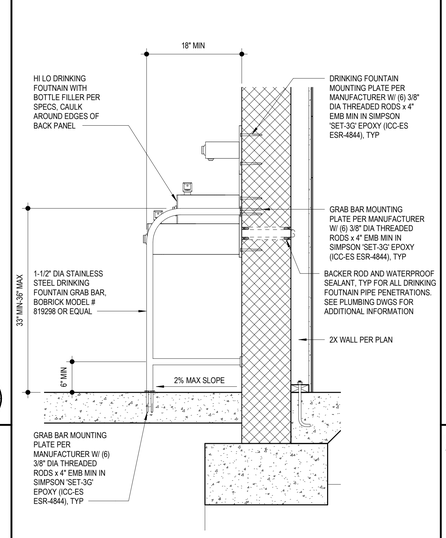

WALL MOUNTED DRINKING FOUNTAIN

SCALE: 1" = 1'-0"

9A / A8.09

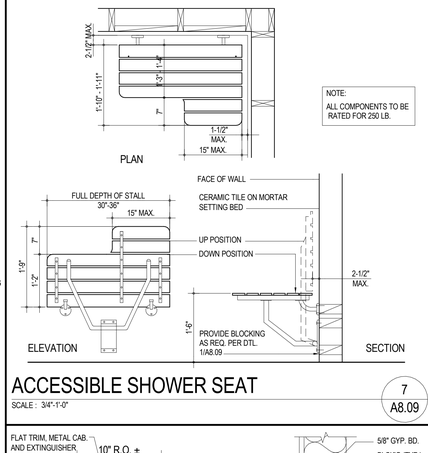

ACCESSIBLE SHOWER SEAT

SCALE: 3/4"-1'-0"

7 / A8.09

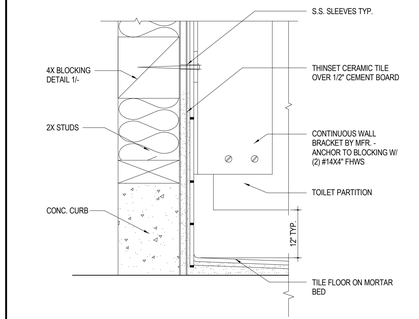

TOILET PARTITION MOUNTING (WALL)

SCALE: 3"=1'-0"

PROJECT NUMBER =
DETAIL IDEN. =
SHEET REFERENCE =

3 / A8.09

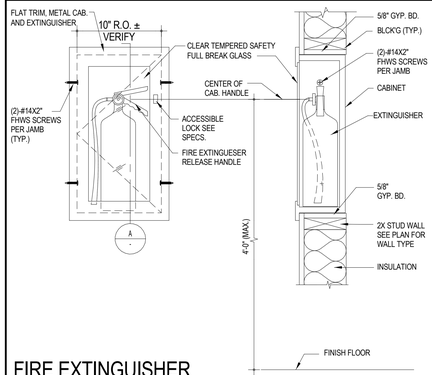

FIRE EXTINGUISHER CABINET SECTION/ELEVATION

SCALE: 1-1/2"=1'-0"

6 / A8.09

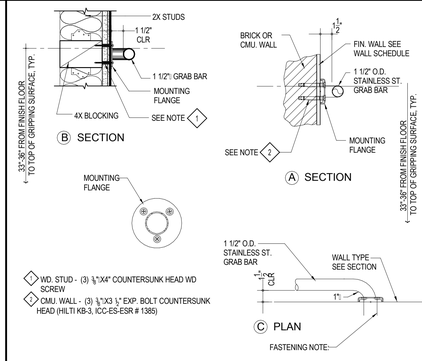

GRAB BAR BRACKETS DETAILS

SCALE: 1-1/2"=1'-0"

2 / A8.09

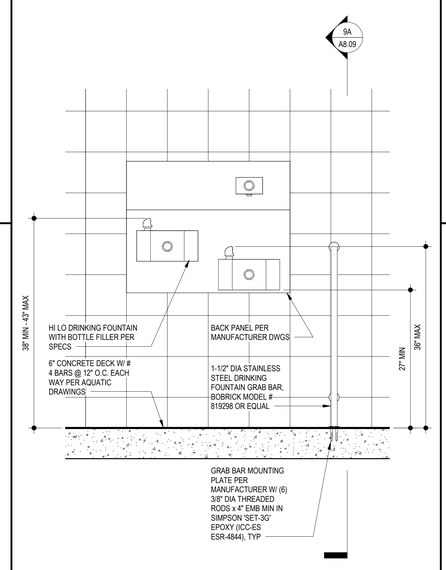

WALL MOUNTED DRINKING FOUNTAIN

SCALE: 1" = 1'-0"

9 / A8.09

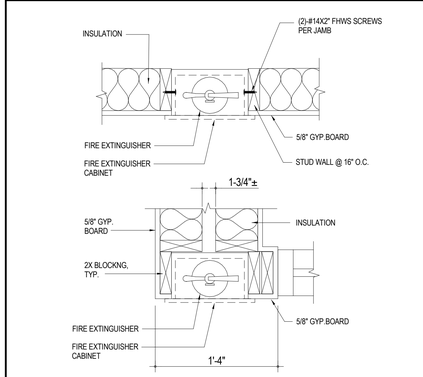

FIRE EXTINGUISHER CABINET PLAN

SCALE: 1-1/2"=1'-0"

5 / A8.09

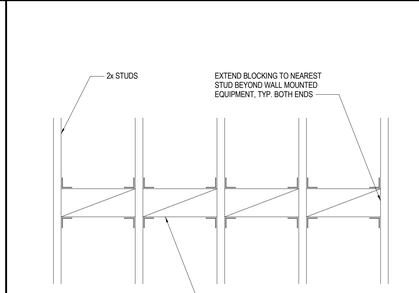

TYP. BLOCKING DETAIL

SCALE: 1"=1'-0"

1 / A8.09

AGENCY

REVIEWED FOR CODE COMPLIANCE BY: WILLDAN ENGINEERING

Approval of these plans & specifications shall not be construed to be a permit for, or an approval of any violation of any Federal, State, County or City laws or ordinances. One set of approved plans must be kept on the job until completion.

9:24:37 AM Jul 21, 2025

FLEWELLING & MOODY
architecture planning interiors

HEADQUARTERS OFFICE:
99 S. Lake Avenue, Suite 300
Pasadena, CA 91101
Phone: 323.543.8300
E-Mail: fm-pasadena@flewelling-moody.com

ANTELOPE VALLEY OFFICE:
1035 West Lancaster Boulevard
Lancaster, California 93534
Phone: 661.949.0771
E-Mail: fm-lancaster@flewelling-moody.com

An Employee Owned Corporation

ARCHITECT

LICENSED ARCHITECT — MATT T. GABBARD — C-14211 — 06/30/2025 — STATE OF CALIFORNIA

CONSULTANT

Drawn by: Author

Check by: Checker

Revisions

No.	Date	Description

All dimensions must be checked at the job by the contractor who accepts full responsibility for their accuracy under the contract. These plans & the specifications in connection therewith have been prepared for a specific site. Any and all responsibility for their use in whole or in part on any other site is hereby disclaimed by Flewelling & Moody.

CITY OF RIDGECREST

SGT. JOHN PINNEY MEMORIAL POOL REPLACEMENT PROJECT

205 S WARNER ST, RIDGECREST, CA 93555

Drawing Title

MISCELLANEOUS DETAILS

Job No. 3055-0100

Sheet No. **A8.09**

Date 07/14/2025

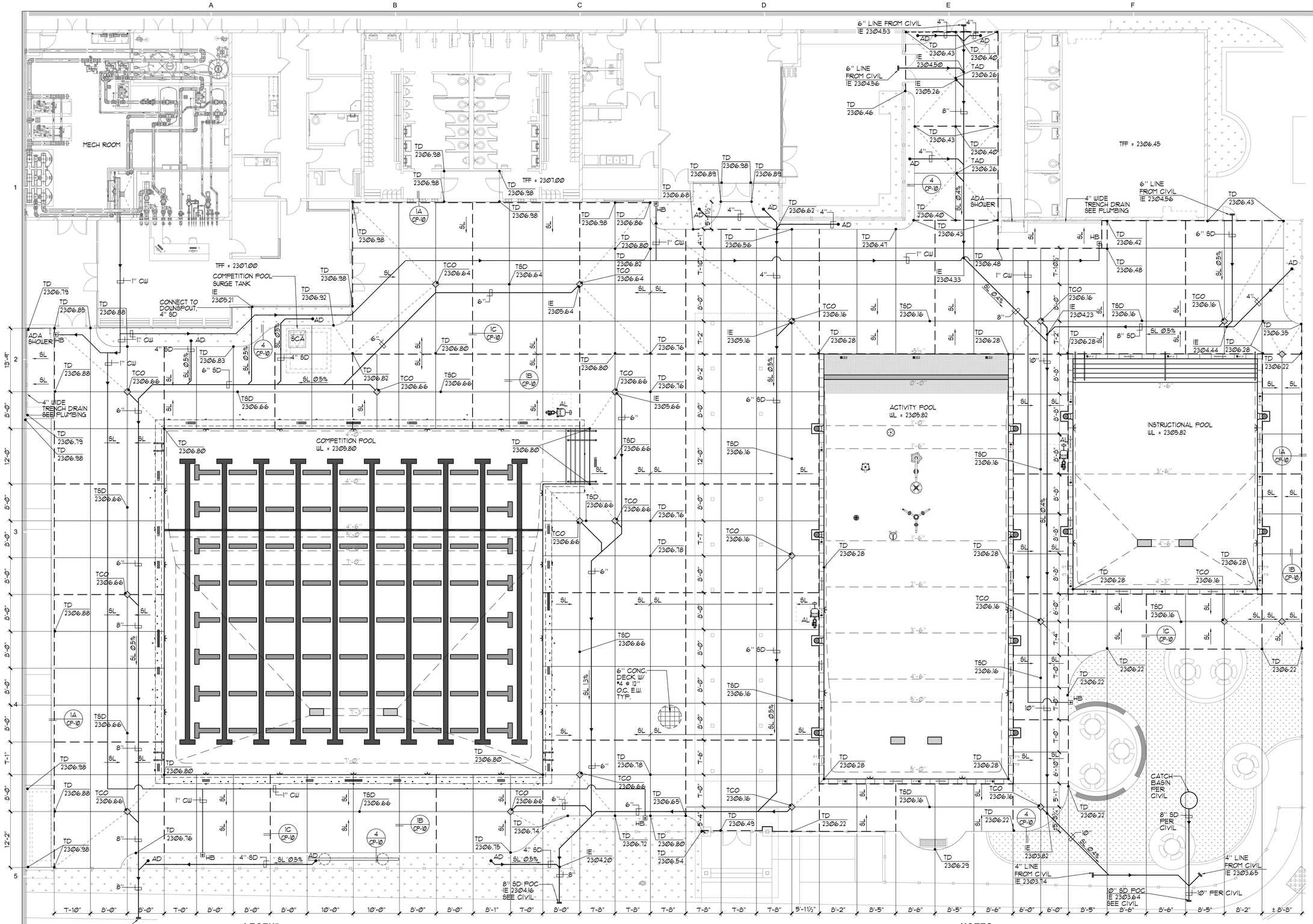

LEGEND

EJ	=	EXPANSION JOINT (1A CP-10, IC CP-10)	AL	=	ACCESSIBLE LIFT (7 CP-6)	TD	= TOP OF DECK
CJ	=	CONTROL JOINT (1B CP-10)	SCA	=	SURGE CHAMBER ACCESS (6 CP-5)	I.E.	= INVERT ELEVATION
TSD	=	TOP OF SLOT DRAIN (2B CP-10)	CW	=	COLD WATER	P.O.C.	= POINT OF CONNECTION
TCO	=	TOP OF CLEAN-OUT (2A CP-10)	SL	=	SLOPE DIRECTION	SD	= STORM DRAIN
TAD	=	TOP OF DECK DRAIN (3 CP-10)	WL	=	WATERLEVEL	AD	= AREA DRAIN
HB	=	HOSE BIBB (8 CP-8)	TFF	=	TOP OF FINISHED FLOOR		

NOTES

(5 CP-9)

1. COORDINATE SIGNAGE PLACEMENT AND COLOR SCHEME WITH OWNER PRIOR TO INSTALLATION.
2. DECKS SHALL HAVE 1% MIN. SLOPE AND 1.8% MAX. SLOPE TO DRAINS.
3. ALL POOL DECKING SHALL BE NON-SLIP AND NON-ABRASIVE MEDIUM BROOM FINISH WITH NATURAL GRAY CONCRETE UNLESS OTHERWISE NOTED.
4. REFER TO ARCHITECTURAL PLANS FOR LOCATIONS AND QUANTITY OF REQUIRED EXITS, DRINKING FOUNTAINS, AND SANITARY FIXTURES.
5. THE POOL CANNOT BE WITHOUT AN APPROVED POOL ENCLOSURE AT ANY TIME, INCLUDING DURING CONSTRUCTION AND INSTALLATION OF THE NEW POOL ENCLOSURE.
6. ALL PIPING MUST BE CLEAR OF BUILDING FOOTINGS AND CLEAR OF FOOTING ZONE OF INFLUENCE.

NORTH

(1) **DECK PLAN** 1/8"=1'-0"

AGENCY

REVIEWED FOR CODE COMPLIANCE BY: WILLDAN ENGINEERING

Approval of these plans & specifications shall not be construed to be a permit for, or an approval of any violation of any Federal, State, County or City laws or ordinances. One set of approved plans must be kept on the job until completion.

9:21:48 AM Jul 21, 2025

FLEWELLING & MOODY
architects *for* education

HEADQUARTERS OFFICE:
815 Colorado Blvd. Suite 200
Los Angeles, California 90041
323.543.8300 fax 323.543.8198
E-Mail: fm-losangeles@flewelling-moody.com

ANTELOPE VALLEY OFFICE:
1035 West Lancaster Bouldvard
Lancaster, California 93534
661.949.0771 FAX 661.949.2843
E-Mail: fm-lancaster@flewelling-moody.com

An Employee Owned Corporation

ARCHITECT

LICENSED ARCHITECT GREGORY S. [illegible] No. C-35802 REN. 07.01.27 STATE OF CALIFORNIA

CONSULTANT

AQUATIC
DESIGN GROUP
2226 Faraday Ave. Carlsbad, CA 92008
AquaticDesignGroup.com
760.438.8400

Drawn by:

Check by:

Revisions

No.	Date	Description

All dimensions must be checked at the job by the contractor who accepts full responsibility for their accuracy under the contract. These plans & the specifications in connection therewith have been prepared for a specific site. Any and all responsibility for their use in whole or in part on any other site is hereby disclaimed by Flewelling & Moody.

CITY OF RIDGECREST

SGT. JOHN PINNEY MEMORIAL POOL REPLACEMENT

205 S WARNER ST, RIDGECREST, CA 93555

Drawing Title

DECK PLAN

Job No. 3055-0100

Date 9/25/2006

Sheet No. **DP-1**

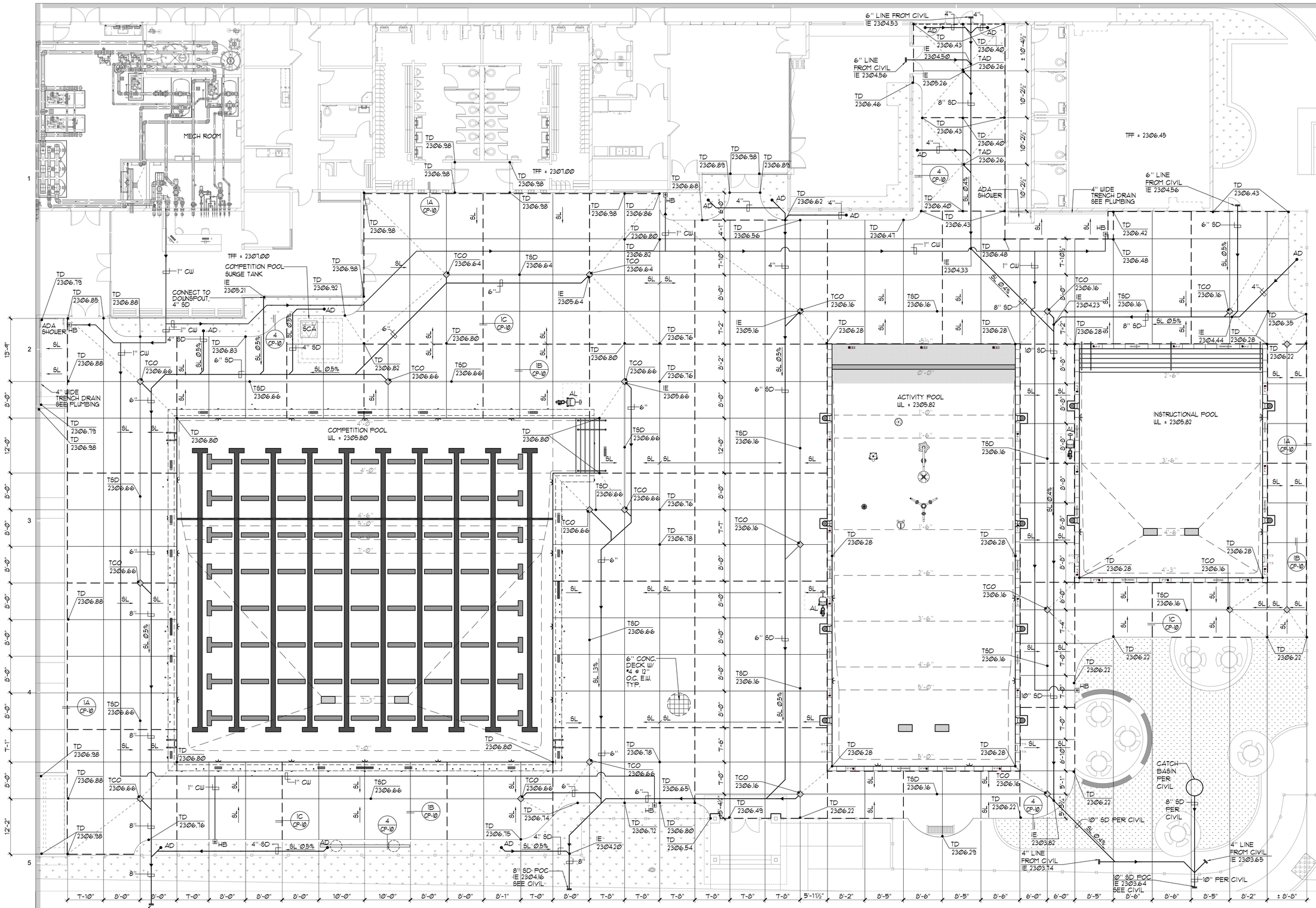

LEGEND

EJ	=	EXPANSION JOINT (1A CP-10, 1C CP-10)	AL	=	ACCESSIBLE LIFT (7 CP-6)	TD	= TOP OF DECK
CJ	=	CONTROL JOINT (1B CP-10)	SCA	=	SURGE CHAMBER ACCESS (6 CP-5)	I.E.	= INVERT ELEVATION
TSD	=	TOP OF SLOT DRAIN (2B CP-10)	CW	=	COLD WATER	P.O.C.	= POINT OF CONNECTION
TCO	=	TOP OF CLEAN-OUT (2A CP-10)	SL	=	SLOPE DIRECTION	SD	= STORM DRAIN
TAD	=	TOP OF DECK DRAIN (3 CP-10)	WL	=	WATERLEVEL	AD	= AREA DRAIN
HB	=	HOSE BIBB (8 CP-8)	TFF	=	TOP OF FINISHED FLOOR		

NOTES

(5 CP-9)

1. COORDINATE SIGNAGE PLACEMENT AND COLOR SCHEME WITH OWNER PRIOR TO INSTALLATION.
2. DECKS SHALL HAVE 1% MIN. SLOPE AND 1.8% MAX. SLOPE TO DRAINS.
3. ALL POOL DECKING SHALL BE NON-SLIP AND NON-ABRASIVE MEDIUM BROOM FINISH WITH NATURAL GRAY CONCRETE UNLESS OTHERWISE NOTED.
4. REFER TO ARCHITECTURAL PLANS FOR LOCATIONS AND QUANTITY OF REQUIRED EXITS, DRINKING FOUNTAINS, AND SANITARY FIXTURES.
5. THE POOL CANNOT BE WITHOUT AN APPROVED POOL ENCLOSURE AT ANY TIME, INCLUDING DURING CONSTRUCTION AND INSTALLATION OF THE NEW POOL ENCLOSURE.
6. ALL PIPING MUST BE CLEAR OF BUILDING FOOTINGS AND CLEAR OF FOOTING ZONE OF INFLUENCE.

NORTH

(1) **DECK PLAN (BID ALT 3)** 1/8"=1'-0"

AGENCY

FLEWELLING & MOODY
architects *for* education

HEADQUARTERS OFFICE:
815 Colorado Blvd. Suite 200
Los Angeles, California 90041
323.543.8300 fax 323.543.8198
E-Mail: fm-losangeles@flewelling-moody.com

ANTELOPE VALLEY OFFICE:
1035 West Lancaster Bouldvard
Lancaster, California 93534
661.949.0771 FAX 661.949.2843
E-Mail: fm-lancaster@flewelling-moody.com

An Employee Owned Corporation

ARCHITECT

LICENSED ARCHITECT GREGORY S. [illegible] 35802 REN. 07/31/27 STATE OF CALIFORNIA

CONSULTANT

AQUATIC DESIGN GROUP
2226 Faraday Ave. Carlsbad, CA 92008
AquaticDesignGroup.com
760.438.8400

Drawn by:

Check by:

Revisions

No.	Date	Description
1	08/27/2025	BID ALTERNATE

All dimensions must be checked at the job by the contractor who accepts full responsibility for their accuracy under the contract. These plans & the specifications in connection therewith have been prepared for a specific site. Any and all responsibility for their use in whole or in part on any other site is hereby disclaimed by Flewelling & Moody.

CITY OF RIDGECREST

SGT. JOHN PINNEY MEMORIAL POOL REPLACEMENT

205 S WARNER ST, RIDGECREST, CA 93555

Drawing Title

DECK PLAN (BID ALT 3)

Job No. 3055-0100

Sheet No. **DP-1A3**

Date 9/25/2006

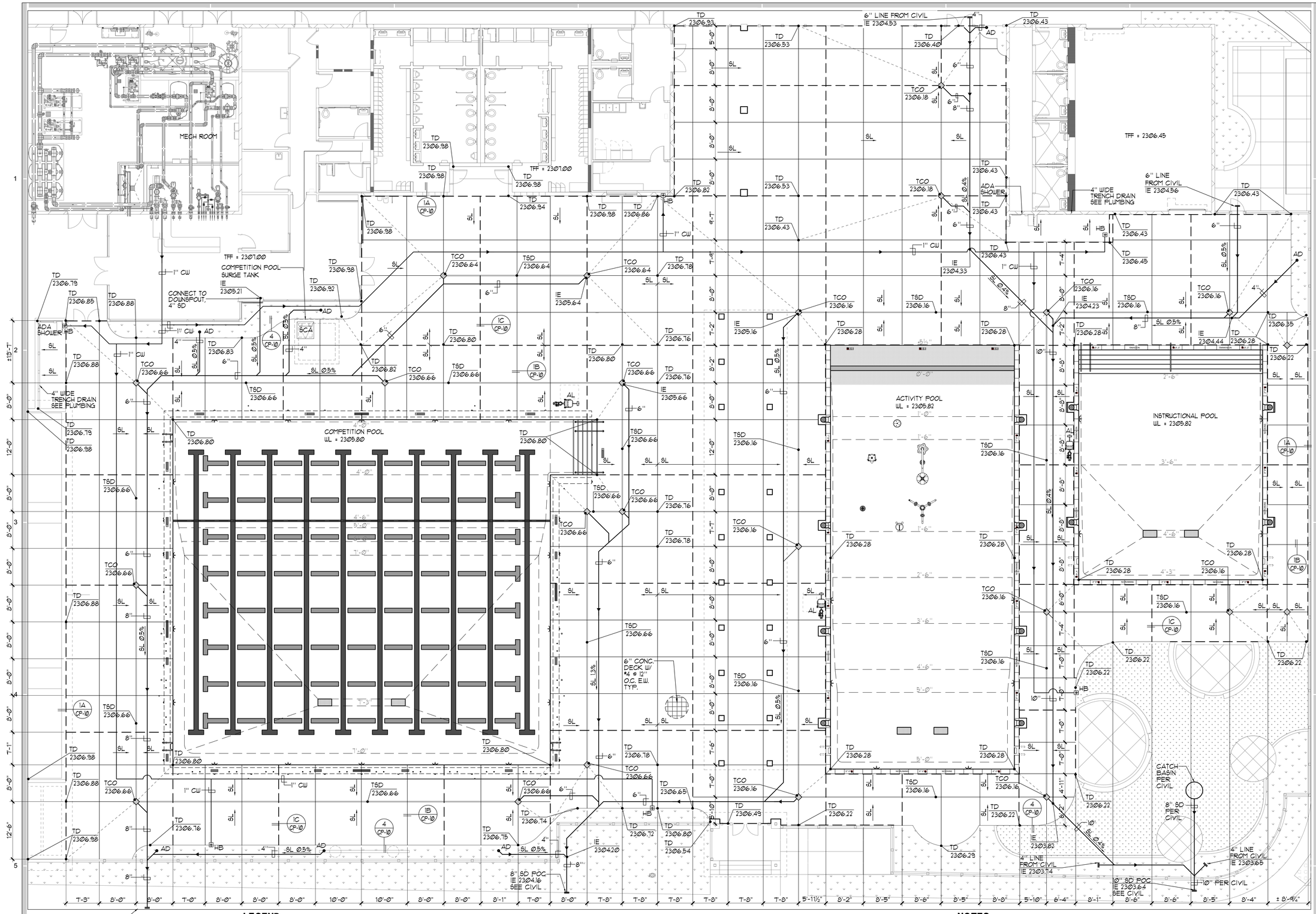

LEGEND

EJ	=	EXPANSION JOINT (1A CP-10, 1C CP-10)	AL	=	ACCESSIBLE LIFT (7 CP-6)	TD	= TOP OF DECK
CJ	=	CONTROL JOINT (1B CP-10)	SCA	=	SURGE CHAMBER ACCESS (6 CP-5)	I.E.	= INVERT ELEVATION
TSD	=	TOP OF SLOT DRAIN (2B CP-10)	CW	=	COLD WATER	P.O.C.	= POINT OF CONNECTION
TCO	=	TOP OF CLEAN-OUT (2A CP-10)	SL	=	SLOPE DIRECTION	SD	= STORM DRAIN
TAD	=	TOP OF DECK DRAIN (3 CP-10)	WL	=	WATERLEVEL	AD	= AREA DRAIN
HB	=	HOSE BIBB (8 CP-8)	TFF	=	TOP OF FINISHED FLOOR		

NOTES

(5 CP-9)

1. COORDINATE SIGNAGE PLACEMENT AND COLOR SCHEME WITH OWNER PRIOR TO INSTALLATION.
2. DECKS SHALL HAVE 1% MIN. SLOPE AND 1.8% MAX. SLOPE TO DRAINS.
3. ALL POOL DECKING SHALL BE NON-SLIP AND NON-ABRASIVE MEDIUM BROOM FINISH WITH NATURAL GRAY CONCRETE UNLESS OTHERWISE NOTED.
4. REFER TO ARCHITECTURAL PLANS FOR LOCATIONS AND QUANTITY OF REQUIRED EXITS, DRINKING FOUNTAINS, AND SANITARY FIXTURES.
5. THE POOL CANNOT BE WITHOUT AN APPROVED POOL ENCLOSURE AT ANY TIME, INCLUDING DURING CONSTRUCTION AND INSTALLATION OF THE NEW POOL ENCLOSURE.
6. ALL PIPING MUST BE CLEAR OF BUILDING FOOTINGS AND CLEAR OF FOOTING ZONE OF INFLUENCE.

NORTH

(1) **DECK PLAN (BID ALT 6)** 1/8"=1'-0"

AGENCY

FLEWELLING & MOODY
architects *for* education

HEADQUARTERS OFFICE:
815 Colorado Blvd. Suite 200
Los Angeles, California 90041
323.543.8300 fax 323.543.8198
E-Mail: fm-losangeles@flewelling-moody.com

ANTELOPE VALLEY OFFICE:
1035 West Lancaster Bouldvard
Lancaster, California 93534
661.949.0771 FAX 661.949.2843
E-Mail: fm-lancaster@flewelling-moody.com

An Employee Owned Corporation

ARCHITECT

LICENSED ARCHITECT GREGORY S. MOODY C-35802 REN. 01/31/27 STATE OF CALIFORNIA

CONSULTANT

AQUATIC DESIGN GROUP
2226 Faraday Ave. Carlsbad, CA 92008
AquaticDesignGroup.com
760.438.8400

Drawn by:

Check by:

Revisions

No.	Date	Description
1	08/27/2025	BID ALTERNATE

All dimensions must be checked at the job by the contractor who accepts full responsibility for their accuracy under the contract. These plans & the specifications in connection therewith have been prepared for a specific site. Any and all responsibility for their use in whole or in part on any other site is hereby disclaimed by Flewelling & Moody.

CITY OF RIDGECREST

SGT. JOHN PINNEY MEMORIAL POOL REPLACEMENT

205 S WARNER ST, RIDGECREST, CA 93555

Drawing Title

DECK PLAN (BID ALT 6)

Job No. 3055-0100

Date 9/25/2006

Sheet No. **DP-1A6**

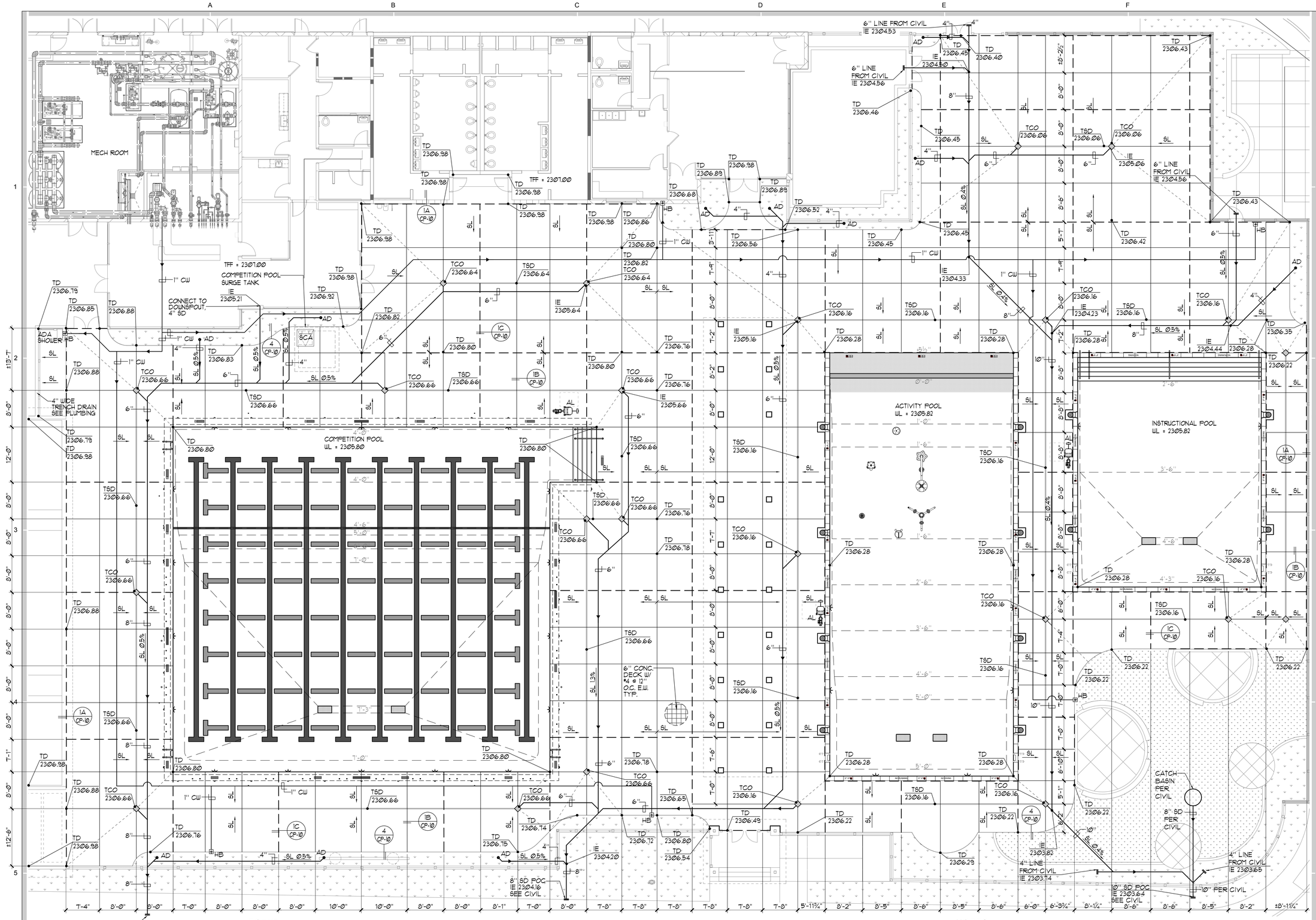

LEGEND

EJ	=	EXPANSION JOINT (1A CP-10, 1C CP-10)	AL	=	ACCESSIBLE LIFT (7 CP-6)	TD	= TOP OF DECK
CJ	=	CONTROL JOINT (1B CP-10)	SCA	=	SURGE CHAMBER ACCESS (6 CP-5)	I.E.	= INVERT ELEVATION
TSD	=	TOP OF SLOT DRAIN (2B CP-10)	CW	=	COLD WATER	P.O.C.	= POINT OF CONNECTION
TCO	=	TOP OF CLEAN-OUT (2A CP-10)	SL	=	SLOPE DIRECTION	SD	= STORM DRAIN
TAD	=	TOP OF DECK DRAIN (3 CP-10)	WL	=	WATERLEVEL	AD	= AREA DRAIN
HB	=	HOSE BIBB (8 CP-8)	TFF	=	TOP OF FINISHED FLOOR		

NOTES

(5 CP-9)

1. COORDINATE SIGNAGE PLACEMENT AND COLOR SCHEME WITH OWNER PRIOR TO INSTALLATION.
2. DECKS SHALL HAVE 1% MIN. SLOPE AND 1.8% MAX. SLOPE TO DRAINS.
3. ALL POOL DECKING SHALL BE NON-SLIP AND NON-ABRASIVE MEDIUM BROOM FINISH WITH NATURAL GRAY CONCRETE UNLESS OTHERWISE NOTED.
4. REFER TO ARCHITECTURAL PLANS FOR LOCATIONS AND QUANTITY OF REQUIRED EXITS, DRINKING FOUNTAINS, AND SANITARY FIXTURES.
5. THE POOL CANNOT BE WITHOUT AN APPROVED POOL ENCLOSURE AT ANY TIME, INCLUDING DURING CONSTRUCTION AND INSTALLATION OF THE NEW POOL ENCLOSURE.
6. ALL PIPING MUST BE CLEAR OF BUILDING FOOTINGS AND CLEAR OF FOOTING ZONE OF INFLUENCE.

NORTH

(1) **DECK PLAN (BID ALT 7)** 1/8"=1'-0"

AGENCY

FLEWELLING & MOODY
architects *for* education

HEADQUARTERS OFFICE:
815 Colorado Blvd. Suite 200
Los Angeles, California 90041
323.543.8300 fax 323.543.8198
E-Mail: fm-losangeles@flewelling-moody.com

ANTELOPE VALLEY OFFICE:
1035 West Lancaster Bouldvard
Lancaster, California 93534
661.949.0771 FAX 661.949.2843
E-Mail: fm-lancaster@flewelling-moody.com

An Employee Owned Corporation

ARCHITECT

LICENSED ARCHITECT GREGORY S. [illegible] 35802 REN. 07/31/27 STATE OF CALIFORNIA

CONSULTANT

AQUATIC DESIGN GROUP
2226 Faraday Ave. Carlsbad, CA 92008
AquaticDesignGroup.com
760.438.8400

Drawn by:

Check by:

Revisions

No.	Date	Description
1	08/27/2025	BID ALTERNATE

All dimensions must be checked at the job by the contractor who accepts full responsibility for their accuracy under the contract. These plans & the specifications in connection therewith have been prepared for a specific site. Any and all responsibility for their use in whole or in part on any other site is hereby disclaimed by Flewelling & Moody.

CITY OF RIDGECREST

SGT. JOHN PINNEY MEMORIAL POOL REPLACEMENT

205 S WARNER ST, RIDGECREST, CA 93555

Drawing Title

DECK PLAN (BID ALT 7)

Job No. 3055-0100

Sheet No. **DP-1A7**

Date 9/25/2006

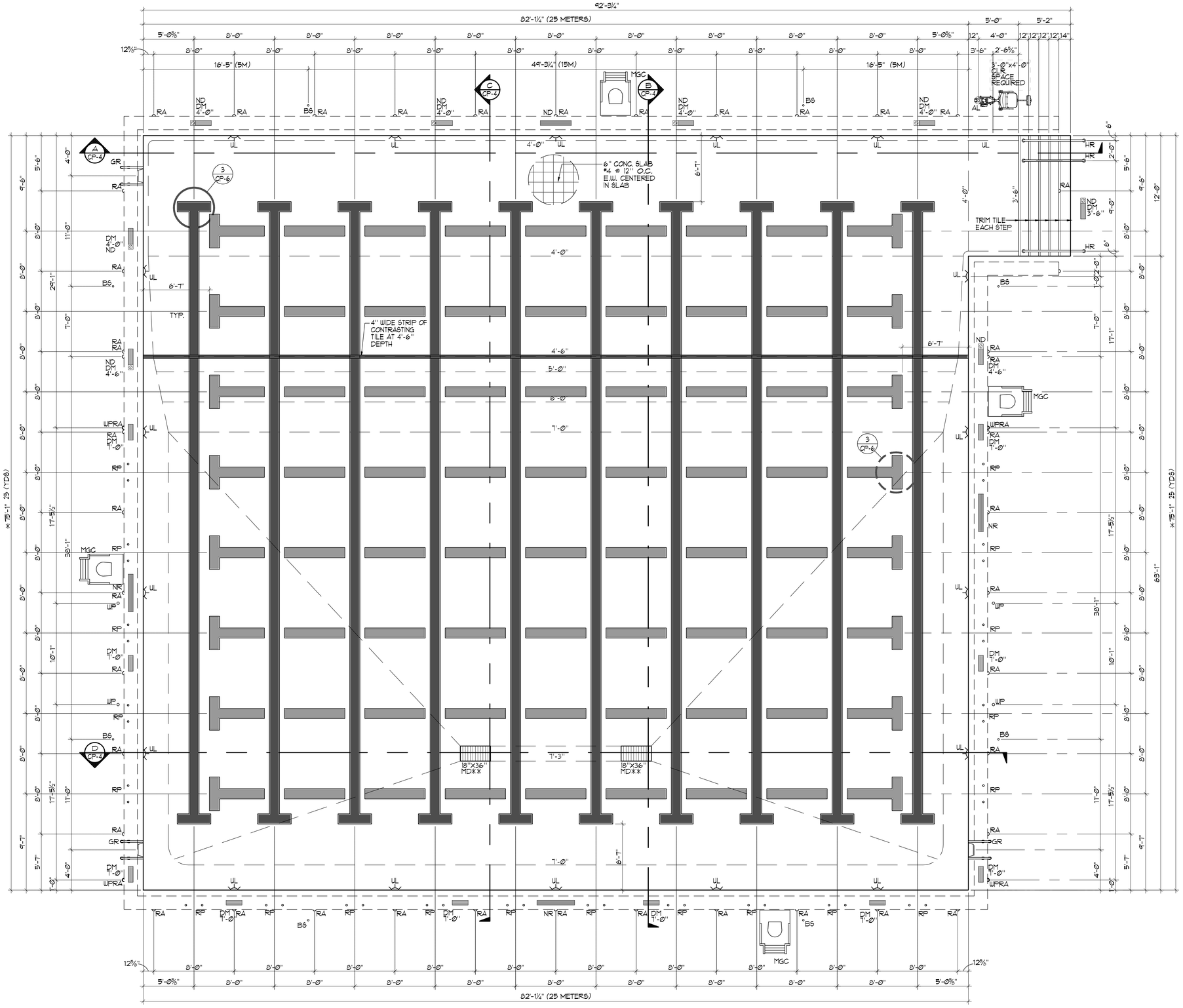

COMPETITION POOL DATA

SURFACE AREA	=	6,287 SQ. FT.
PERIMETER	=	335 FT.
DEPTH	=	3'-6" - 7'-3"
VOLUME	=	283,946 GAL.
6 HOUR TURNOVER	=	788 GPM

LEGEND

MD	=	MAIN DRAIN	1 CP-8
DM	=	DEPTH MARKER	4 CP-6
NR	=	'NO RUNNING'	5 CP-6
ND	=	'NO DIVING'	5, 6 CP-6
RA	=	ROPE ANCHOR	3 CP-7
RP	=	RACING PLATFORM	2 CP-7
AL	=	ACCESSIBLE LIFT	7 CP-6
UL	=	UNDERWATER LIGHT	3 CP-9
GR	=	GRAB RAIL	1 CP-7
WP	=	WATER POLO GOAL	6 CP-7
MGC	=	MOVABLE GUARD CHAIR	5 CP-7
HR	=	HAND RAIL	8 CP-5
BS	=	BACKSTROKE STANCHION	4 CP-7

NOTE:

1. EACH POOL SHALL BE PROVIDED WITH A SHEPHERD'S HOOK ATTACHED TO A NON-TELESCOPING POLE, WITH A MIN. LENGTH OF TWELVE (12) FEET, AND MADE WITH A BLUNT END. EACH POOL SHALL BE PROVIDED WITH A USCG APPROVED LIFESAVING RING HAVING AN OUTSIDE DIAMETER OF FIFTEEN TO TWENTY-FOUR INCHES (15"-24"), FIRMLY ATTACHED TO A ONE-QUARTER INCH TO THREE-EIGHTHS INCH (¼"-⅜") DIAMETER THROWING ROPE THAT IS AS LONG AS ONE AND ONE HALF (1½) TIMES THE MAXIMUM WIDTH OF THE POOL, OR FIFTY FEET (50'), WHICHEVER IS LESS. LIFESAVING EQUIPMENT SHALL BE MOUNTED IN A CONSPICUOUS PLACE WITHIN THE POOL ENCLOSURE AND BE READILY AVAILABLE FOR USE IN GOOD CONDITION. POOLS GREATER THAN 50 FEET SHALL HAVE MULTIPLE UNITS WITH AT LEAST ONE SHEPHERD'S HOOK AND LIVE SAVING RING LOCATED ALONG EACH OF THE LONGER SIDE OF THE POOLS.

NORTH

1 **COMPETITION POOL LAYOUT PLAN** ¼"=1'-0"

AGENCY

REVIEWED FOR CODE COMPLIANCE BY: WILLDAN ENGINEERING

Approval of these plans & specifications shall not be construed to be a permit for, or an approval of any violation of any Federal, State, County or City laws or ordinances. One set of approved plans must be kept on the job until completion.

9:21:52 AM Jul 21, 2025

FLEWELLING & MOODY
architects *for* education

HEADQUARTERS OFFICE:
815 Colorado Blvd. Suite 200
Los Angeles, California 90041
323.543.8300 fax 323.543.8198
E-Mail: fm-losangeles@flewelling-moody.com

ANTELOPE VALLEY OFFICE:
1035 West Lancaster Bouldvard
Lancaster, California 93534
661.949.0771 FAX 661.949.2843
E-Mail: fm-lancaster@flewelling-moody.com

An Employee Owned Corporation

ARCHITECT

LICENSED ARCHITECT GREGORY S. [illegible] No. C-35802 REN: 07/31/27 STATE OF CALIFORNIA

CONSULTANT

AQUATIC DESIGN GROUP
2226 Faraday Ave. Carlsbad, CA 92008
AquaticDesignGroup.com
760.438.8400

Drawn by:

Check by:

Revisions

No.	Date	Description

All dimensions must be checked at the job by the contractor who accepts full responsibility for their accuracy under the contract. These plans & the specifications in connection therewith have been prepared for a specific site. Any and all responsibility for their use in whole or in part on any other site is hereby disclaimed by Flewelling & Moody.

CITY OF RIDGECREST

SGT. JOHN PINNEY MEMORIAL POOL REPLACEMENT

205 S WARNER ST, RIDGECREST, CA 93555

Drawing Title

COMPETITION POOL LAYOUT PLAN

Job No. 3055-0100

Date 9/25/2006

Sheet No. **CP-1**

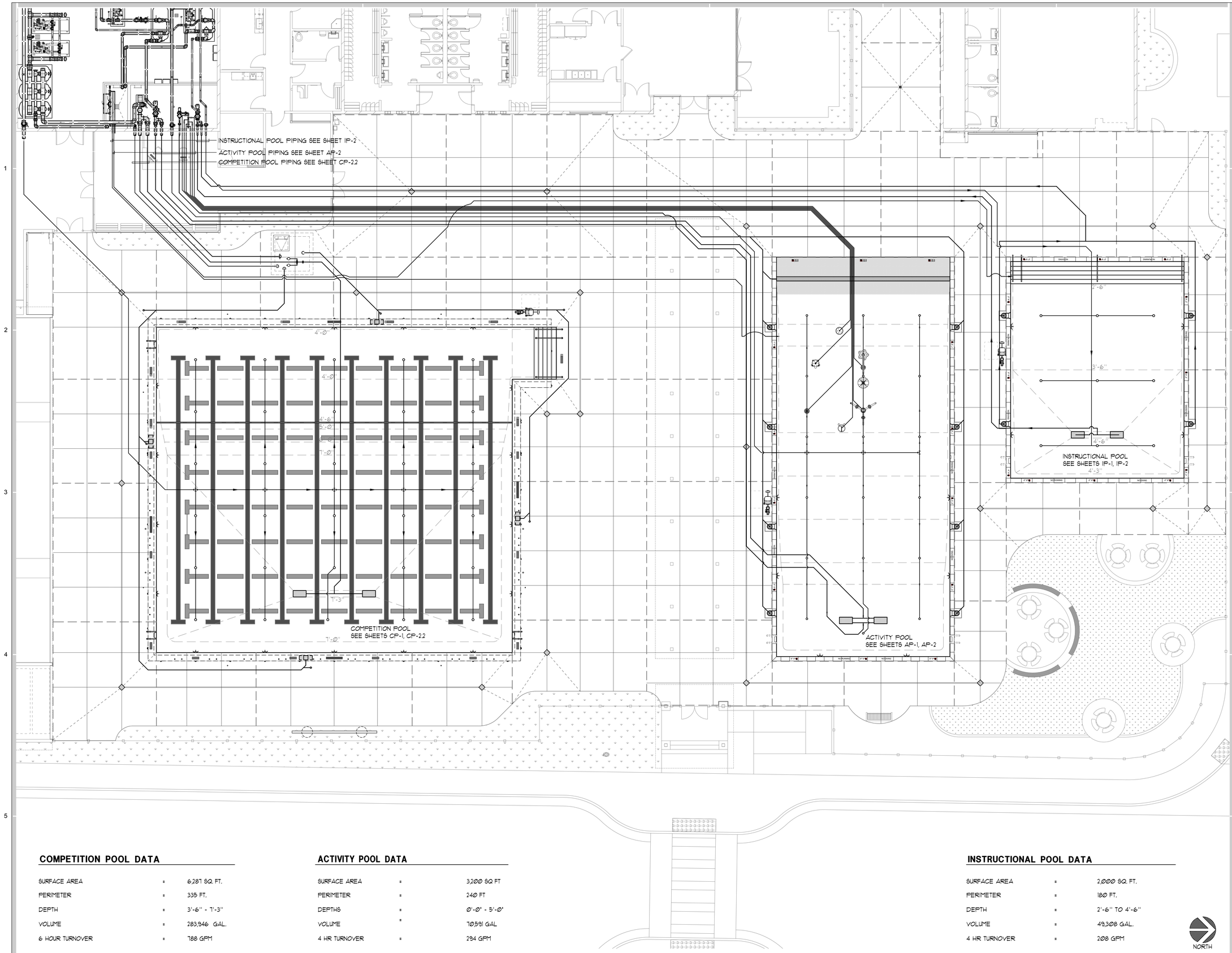

COMPETITION POOL DATA

SURFACE AREA	=	6,287 SQ. FT.
PERIMETER	=	335 FT.
DEPTH	=	3'-6" - 7'-3"
VOLUME	=	283,946 GAL.
6 HOUR TURNOVER	=	788 GPM

ACTIVITY POOL DATA

SURFACE AREA	=	3,200 SQ FT
PERIMETER	=	240 FT
DEPTHS	=	0'-0" - 5'-0"
VOLUME	=	70,591 GAL
4 HR TURNOVER	=	294 GPM

INSTRUCTIONAL POOL DATA

SURFACE AREA	=	2,000 SQ. FT.
PERIMETER	=	180 FT.
DEPTH	=	2'-6" TO 4'-6"
VOLUME	=	49,308 GAL.
4 HR TURNOVER	=	208 GPM

NORTH

1 **OVERALL AREA PIPING PLAN** 1/8"=1'-0"

AGENCY

REVIEWED FOR CODE COMPLIANCE BY: WILLDAN ENGINEERING

Approval of these plans & specifications shall not be construed to be a permit for, or an approval of any violation of any Federal, State, County or City laws or ordinances. One set of approved plans must be kept on the job until completion.

9:21:56 AM Jul 21, 2025

FLEWELLING & MOODY
architects *for* education

HEADQUARTERS OFFICE:
815 Colorado Blvd. Suite 200
Los Angeles, California 90041
323.543.8300 fax 323.543.8198
E-Mail: fm-losangeles@flewelling-moody.com

ANTELOPE VALLEY OFFICE:
1035 West Lancaster Bouldvard
Lancaster, California 93534
661.949.0771 FAX 661.949.2843
E-Mail: fm-lancaster@flewelling-moody.com

An Employee Owned Corporation

ARCHITECT

LICENSED ARCHITECT GREGORY S. 35802 REN. 07/31/27 STATE OF CALIFORNIA

CONSULTANT

AQUATIC DESIGN GROUP
2226 Faraday Ave. Carlsbad, CA 92008
AquaticDesignGroup.com
760.438.8400

Drawn by:

Check by:

Revisions

No.	Date	Description

All dimensions must be checked at the job by the contractor who accepts full responsibility for their accuracy under the contract. These plans & the specifications in connection therewith have been prepared for a specific site. Any and all responsibility for their use in whole or in part on any other site is hereby disclaimed by Flewelling & Moody.

CITY OF RIDGECREST

SGT. JOHN PINNEY MEMORIAL POOL REPLACEMENT

205 S WARNER ST, RIDGECREST, CA 93555

Drawing Title

OVERALL AREA PIPING PLAN

Job No. 3055-0100

Sheet No. **CP-2.1**

Date 9/25/2006

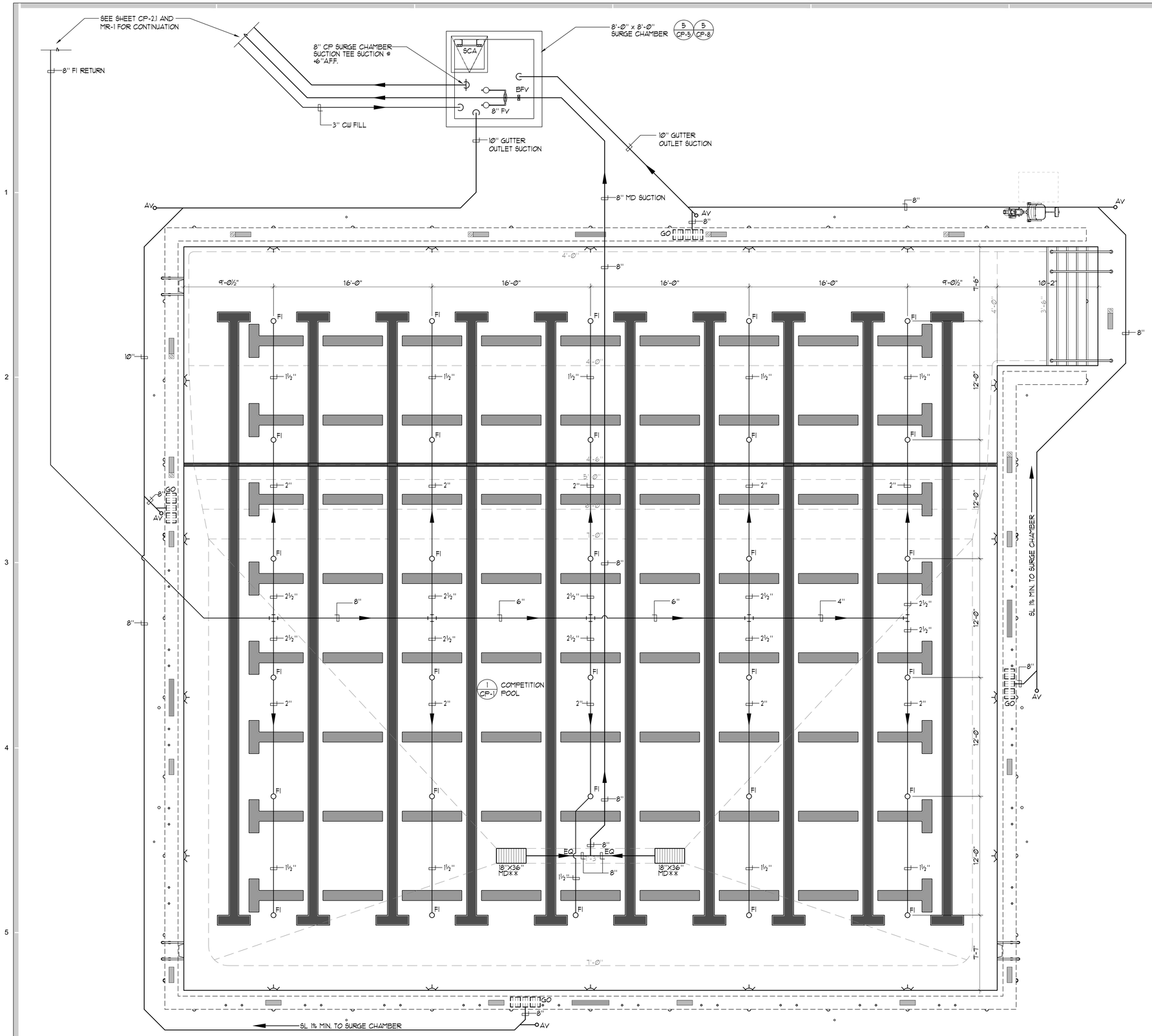

COMPETITION POOL DATA

SURFACE AREA	=	6,287 SQ. FT.
PERIMETER	=	335 FT.
DEPTH	=	3'-6" - 7'-3"
VOLUME	=	283,946 GAL.
6 HOUR TURNOVER	=	788 GPM

LEGEND

MD	=	MAIN DRAIN	1 CP-8
AV	=	AIR VENT	6 CP-8
FI	=	FLOOR INLET	2 CP-8
GO	=	GUTTER OUTLET	4 CP-8
BFV	=	BUTTERFLY VALVE	7 CP-7
FV	=	FLOAT VALVE	5 CP-8
SCA	=	SURGE CHAMBER ACCESS	

NORTH

1 **COMPETITION POOL PIPING PLAN** ¼"=1'-Ø"

AGENCY

REVIEWED FOR CODE COMPLIANCE BY: WILLDAN ENGINEERING

Approval of these plans & specifications shall not be construed to be a permit for, or an approval of any violation of any Federal, State, County or City laws or ordinances. One set of approved plans must be kept on the job until completion.

9:21:59 AM Jul 21, 2025

FLEWELLING & MOODY
architects *for* education

HEADQUARTERS OFFICE:
815 Colorado Blvd. Suite 200
Los Angeles, California 90041
323.543.8300 fax 323.543.8198
E-Mail: fm-losangeles@flewelling-moody.com

ANTELOPE VALLEY OFFICE:
1035 West Lancaster Bouldvard
Lancaster, California 93534
661.949.0771 FAX 661.949.2843
E-Mail: fm-lancaster@flewelling-moody.com

An Employee Owned Corporation

ARCHITECT

LICENSED ARCHITECT GREGORY S. 35802 REN. 07.31.07 STATE OF CALIFORNIA

CONSULTANT

AQUATIC DESIGN GROUP
2226 Faraday Ave. Carlsbad, CA 92008
AquaticDesignGroup.com
760.438.8400

Drawn by:

Check by:

Revisions

No.	Date	Description

All dimensions must be checked at the job by the contractor who accepts full responsibility for their accuracy under the contract. These plans & the specifications in connection therewith have been prepared for a specific site. Any and all responsibility for their use in whole or in part on any other site is hereby disclaimed by Flewelling & Moody.

CITY OF RIDGECREST

SGT. JOHN PINNEY MEMORIAL POOL REPLACEMENT

205 S WARNER ST, RIDGECREST, CA 93555

Drawing Title

COMPETITION POOL PIPING PLAN

Job No. 3055-0100

Date 9/25/2006

Sheet No. **CP-2.2**

KEY NOTES

	DESCRIPTION	QUANTITY	UNIT
▼	ETHERNET DROP-BY OTHERS	1	COUNT
F4	WALL PLATE FIBER CONNECTION	1	COUNT
485	WALL PLATE RS-485 CONNECTION	1	COUNT
5	WALL PLATE SCOREBOARD NODE	1	COUNT
6 CP-10 / 1	WALL PLATE TIMER NODE	2	COUNT
7 CP-10 / D	TIMING DECK NODE (4"x4"x6" PVC BOX)	10	COUNT
2	START DECK NODE (4"x4"x6" PVC BOX)	1	COUNT
5	SCOREBOARD DECK NODE (4"x4"x6" PVC BOX)	1	COUNT

LEGEND

WP = WALL PLATE (6 CP-10)
DP = DECK PLATE (7 CP-10)
C = CONDUIT
UL = UNDERWATER LIGHT (3 CP-9)
JB = JUNCTION BOX (4 CP-9)

TIMING SYSTEM NOTES/EQUIPMENT

NOTE: THE CONTRACTOR SHALL SUPPLY AND INSTALL DECK PLATE BOXES, WALL PLATE BOXES, WALL PLATE JUNCTION BOXES, CONDUIT, WIRING, SCOREBOARD AND ALL TIMING EQUIPMENT AS SHOWN FOR THE 'COLORADO' TIME SYSTEM OR EQUAL.

TIMING SYSTEM

QTY	MODEL	DESCRIPTION
A 1	GEN1-TMR	INTUITIVE SOFTWARE INTERFACE WITH MODERN WINDOWS USER INTERFACE AND TOUCHSCREEN FRIENDLY. FLEXIBLE USER INTERFACE OPTIONS WITH ETHERNET CONNECTIVITY TO THE TIMER. ADVANCED DIAGNOSTICS, INTELLIGENT BUS SYSTEM, ROBUST SAFEGUARDS. TIMER WILL CONTINUE TO RUN AND FINISH RACE WITHOUT USER INTERFACE. WET-PLUGGABLE TITANIUM CONNECTIONS. INTEGRATED 2.4 GHz WIRELESS TO SCOREBOARDS, FACILITY NETWORK CONNECTIVITY.
1	R-600-302	GENT LAPTOP

START SYSTEM

QTY	MODEL	DESCRIPTION
B 1	SS	CHAMPION SERIES START SYSTEM WITH WIRED MICROPHONE, VOLUME CONTROL ON EACH MICROPHONE INPUT, EXTERNAL CONNECTIONS FOR ADDITIONAL STROBE LIGHTS, LED BATTERY INDICATION LIGHT, AC/DC POWER CAPABILITIES AND AN EXTERNAL 360° STROBE. TRIPOD OR TABLE TOP OPTIONS.
1	START-FPM-2	FLAG POLE MOUNTING KIT FOR STARTER
106	SP-6/45	6 WATT INDIVIDUAL BLOCK SPEAKER

TOUCHPADS

QTY	MODEL	DESCRIPTION
C 10	TP-T8G	AQUAGRIP GUTTERHUNG TOUCHPADS (7.8" x 22") US PATENT 5,702,799
1	CAD-TP96	TOUCHPAD CADDY FOR GUTTERHUNG TOUCHPADS. HOLDS UP TO TEN TOUCHPADS. SOME ASSEMBLY REQUIRED.
10	4000-0040	SPECIAL SIZE TOUCHPAD BRACKETS

GENT TOUCHPAD SYSTEM

QTY	MODEL	DESCRIPTION
1	TP-GEN1-12	TWELVE-LANE TOUCHPAD SYSTEM FOR THE GEN 1 TIMING SYSTEM (SERIAL) INCLUDES AN TWELVE-LANE CABLE HARNESS, ONE PUSH BUTTON PER LANE+ ONE SPARE, VACUUM PUMP AND TOUCHPAD METER.
1	CHSP-1-12	

GENT CABLE

QTY	MODEL	DESCRIPTION
1	R-015-107-8	SCOREBOARD CABLE, 8 METER
1	R-015-115-8	TIMER CABLE, 8 METER
1	R-015-106-8	STARTER CABLE, 8 METER
1	R-015-115-15	TIMER CABLE, 15 METER

CONTROLLER

QTY	MODEL	DESCRIPTION
1	WTTC-2	WIRELESS TABLE TOP CONTROLLER
1	CASE-WTTC	CASE FOR THE WIRELESS TABLE TOP CONTROLLER
1	WHC-1	WIRELESS HANDHELD CONTROLLER

GENT IN DECK

QTY	MODEL	DESCRIPTION
D 10	TDPI-D	TITANIUM DOMED DECK PLATE-INTELLIGENT TITANIUM DECK PLATES REQUIRE A 4" SQUARE OR 4.125" DIAMETER CIRCULAR OPENING AT A MINIMUM. WRITTEN VERIFICATION AND SIGN OFF REQUIRED FROM CUSTOMER NOTE: INCLUDES 5 YEAR WARRANTY. CTS IS THE ONLY MANUFACTURER OF TITANIUM DECK PLATE.
2 1	TDPI-S2	START DECK NODE
5 1	TDPI-SC5	SCOREBOARD DECK NODE
1 1	R-1004-0549	GENT WALL PLATE (15X15)
1	TDPI-KI	KIT-SCOREBOARD BUS HEAD & TAIL NODE INSTALLATION
1	TDPI-KI	KIT-TIMING BUS HEAD & TAIL NODE INSTALLATION
1	WPI-F4	WP-YDS FIBER & LEGACY CONNECT

GENT CABLE

QTY	MODEL	DESCRIPTION
1200'	R-015-737	TIMING BUS CABLE- 7 CONDUCTOR
1200'	R-015-726	SCOREBOARD BUS CABLE- 4 CONDUCTOR

ADAPTER

QTY	MODEL	DESCRIPTION
1	WA-3	WIRELESS ADAPTER, 2.4 GHz

RELAY JUDGING PLATFORM

QTY	MODEL	DESCRIPTION
10	RJPL-24x32	CTS RELAY JUDGING PLATFORM 24"x32" W/ BUILT-IN LED LIGHT FOR START
1	CAD-RJPL-2	CADDY- 24" WIDTH RELAY JUDGING PLATFORMS (HOLDS 10)

SCOREBOARD (1 CP-11)

QTY	MODEL	DESCRIPTION
3 1	SCOREBOARD	PROVIDE LED MATRIX DISPLAY SCOREBOARD INCLUDING ALL POWER REQUIREMENTS, BONDING AND STRUCTURAL SUPPORTS. THE SCOREBOARD SHALL HAVE FULL COLOR AND VIDEO CAPABILITIES. YSC 10mm 32DH x 576W SMD, FA, OD DISPLAY ACTIVE AREA: 125.98"(H) x 226.77"(W) (E) PROVIDE SEVEN (7) DEDICATED 20 AMP CIRCUIT TO BE TERMINATED INTO EACH SCOREBOARD LOAD CENTER (F) MASTER ON/OFF SCOREBOARD SWITCH WITH PILOT LIGHT W/ LOCKABLE ENCLOSURE. (G) SCOREBOARD DATA CONNECTION BOX. CONNECT TO TIMING/WALL BOX LOCATION W/ 1" PVC CONDUIT.

PACE CLOCK

QTY	MODEL	DESCRIPTION
2	DC-1500	SPECIFICATIONS: • 4 DIGIT PACE CLOCK • 10" RED DIGITS - VIEWABLE UP TO 400 FEET • HIGH INTENSITY LED - INDOOR/OUTDOOR • "SPLASH-PROOF" PROTECTIVE LENS • INTERNAL RECHARGEABLE BATTERY • INTERNAL HORN • FEET AND HANDLE
1	PC-PRO	FUNCTIONS: • SIMPLE PACE CLOCK • CUMULATIVE SPLIT DISPLAY • LAP SPLIT DISPLAY • LAP COUNTER • LAP SPLIT DISPLAY WITH TURN SPEED • RELAY EXCHANGES DISPLAY • START REACTION DISPLAY • HAND TURN SPEED • BREAK OUT SPEED DISPLAY • BREAK OUT SPEED DISPLAY WITH START REACTION • TIME DISPLAY FOR REPETITIVE SETS • SINGLE LANE TIMER • MID-RACE TIMING DISPLAY • WATERPOLO SHOT CLOCK • WATERPOLO GAME CLOCK

NOTE: MOST FUNCTIONS REQUIRE ADDITIONAL INPUT DEVICES, I.e. TOUCHPAD, RELAY JUDGING PLATFORM, START SYSTEM, PUSHBUTTON

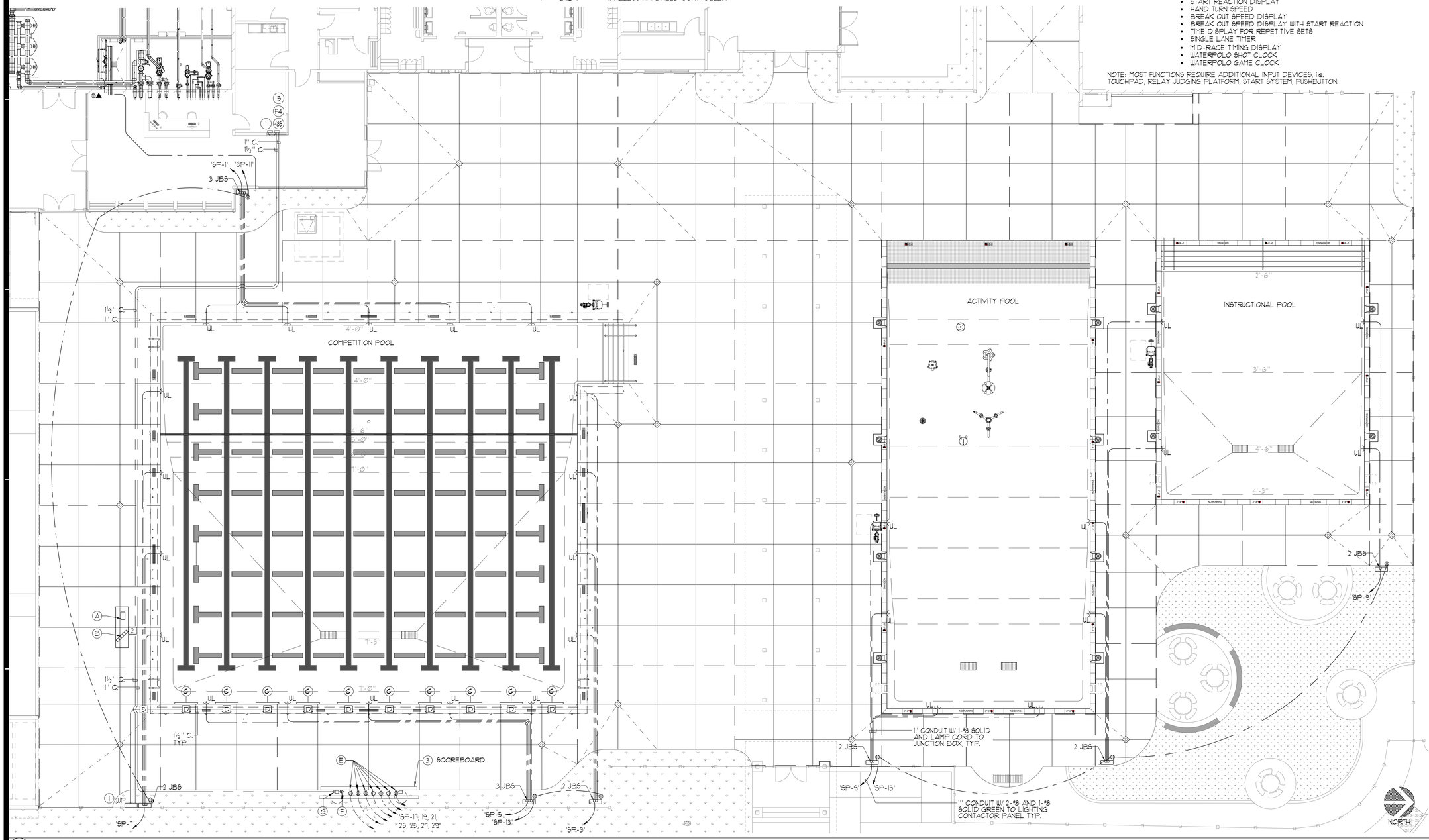

1 OVERALL AREA UNDERWATER LIGHTING / TIMING PLAN 1/8"=1'-0"

AGENCY

REVIEWED FOR CODE COMPLIANCE BY: WILLDAN ENGINEERING

Approval of these plans & specifications shall not be construed to be a permit for, or an approval of any violation of any Federal, State, County or City laws or ordinances. One set of approved plans must be kept on the job until completion.

9:22:03 AM Jul 21, 2025

FLEWELLING & MOODY
architects for education

HEADQUARTERS OFFICE:
815 Colorado Blvd. Suite 200
Los Angeles, California 90041
323.543.8300 fax 323.543.8198
E-Mail: fm-losangeles@flewelling-moody.com

ANTELOPE VALLEY OFFICE:
1035 West Lancaster Bouldvard
Lancaster, California 93534
661.949.0771 FAX 661.949.2843
E-Mail: fm-lancaster@flewelling-moody.com

An Employee Owned Corporation

ARCHITECT

LICENSED ARCHITECT GREGORY S. [illegible] 35802 REN. 07.31.07 STATE OF CALIFORNIA

CONSULTANT

AQUATIC DESIGN GROUP
2226 Faraday Ave. Carlsbad, CA 92008
AquaticDesignGroup.com
760.438.8400

Drawn by:

Check by:

Revisions

No.	Date	Description

All dimensions must be checked at the job by the contractor who accepts full responsibility for their accuracy under the contract. These plans & the specifications in connection therewith have been prepared for a specific site. Any and all responsibility for their use in whole or in part on any other site is hereby disclaimed by Flewelling & Moody.

CITY OF RIDGECREST

SGT. JOHN PINNEY MEMORIAL POOL REPLACEMENT

205 S WARNER ST, RIDGECREST, CA 93555

Drawing Title

OVERALL AREA UNDERWATER LIGHTING / TIMING PLAN

Job No. 3055-0100

Sheet No. CP-3

Date 9/25/2006

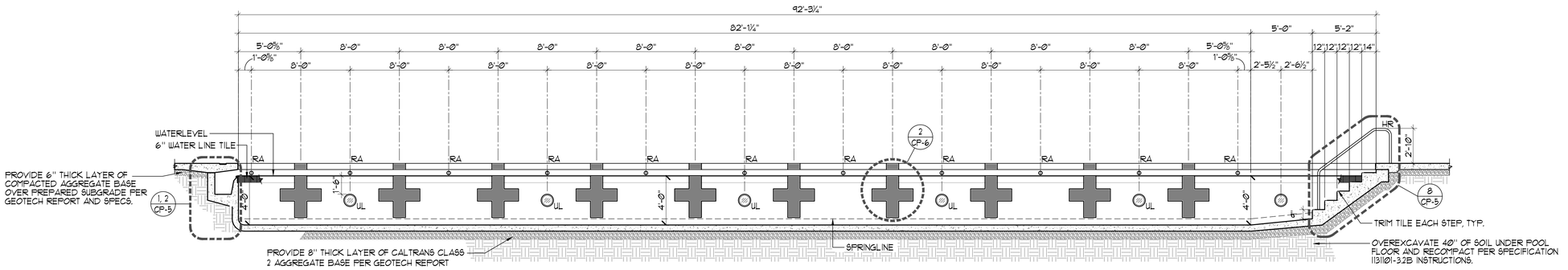

A **COMPETITION POOL SECTION** ¼"=1'-Ø"

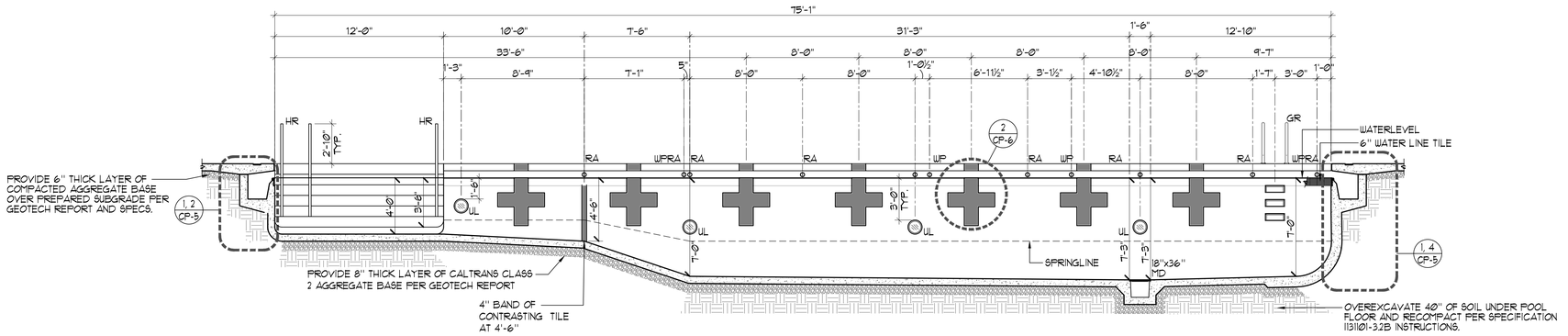

B **COMPETITION POOL SECTION** ¼"=1'-Ø"

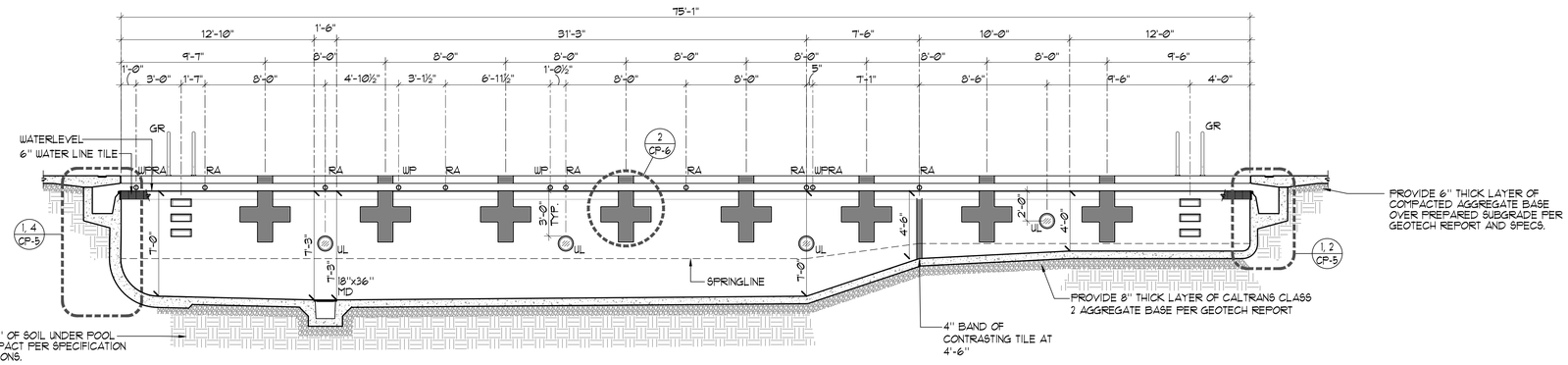

C **COMPETITION POOL SECTION** ¼"=1'-Ø"

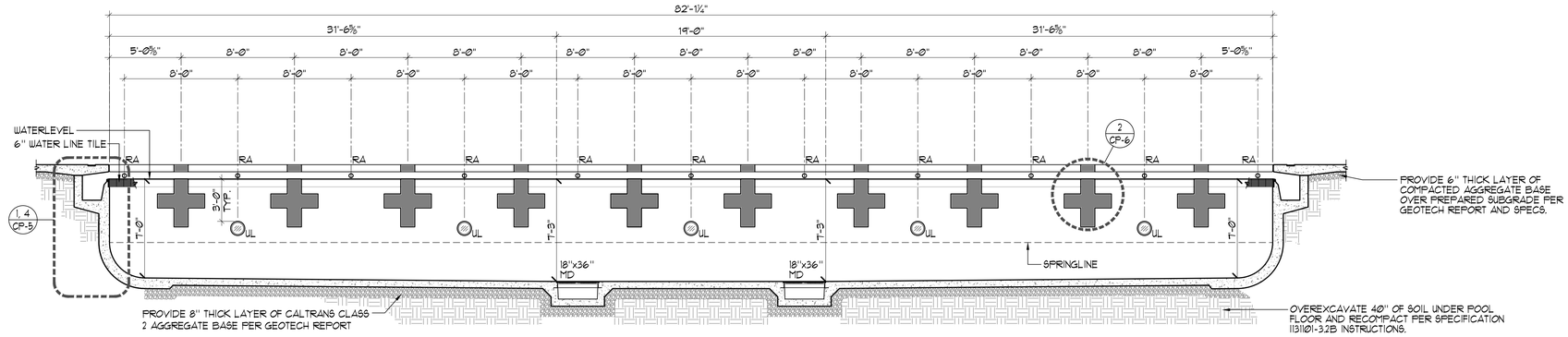

D **COMPETITION POOL SECTION** ¼"=1'-Ø"

AGENCY

REVIEWED FOR CODE COMPLIANCE BY: WILLDAN ENGINEERING

Approval of these plans & specifications shall not be construed to be a permit for, or an approval of any violation of any Federal, State, County or City laws or ordinances. One set of approved plans must be kept on the job until completion.

9:22:11 AM Jul 21, 2025

FLEWELLING & MOODY
architects *for* education

HEADQUARTERS OFFICE:
815 Colorado Blvd. Suite 200
Los Angeles, California 90041
323.543.8300 fax 323.543.8198
E-Mail: fm-losangeles@flewelling-moody.com

ANTELOPE VALLEY OFFICE:
1035 West Lancaster Bouldvard
Lancaster, California 93534
661.949.0771 FAX 661.949.2843
E-Mail: fm-lancaster@flewelling-moody.com

An Employee Owned Corporation

ARCHITECT
LICENSED ARCHITECT GREGORY S. [illegible] 35802 REN. 07.31.27 STATE OF CALIFORNIA

CONSULTANT
AQUATIC DESIGN GROUP
2226 Faraday Ave. Carlsbad, CA 92008
AquaticDesignGroup.com
760.438.8400

Drawn by:

Check by:

Revisions

No.	Date	Description

All dimensions must be checked at the job by the contractor who accepts full responsibility for their accuracy under the contract. These plans & the specifications in connection therewith have been prepared for a specific site. Any and all responsibility for their use in whole or in part on any other site is hereby disclaimed by Flewelling & Moody.

CITY OF RIDGECREST

SGT. JOHN PINNEY MEMORIAL POOL REPLACEMENT

205 S WARNER ST, RIDGECREST, CA 93555

Drawing Title

COMPETITION POOL SECTIONS

Job No. 3055-0100

Sheet No. **CP-4**

Date 9/25/2006

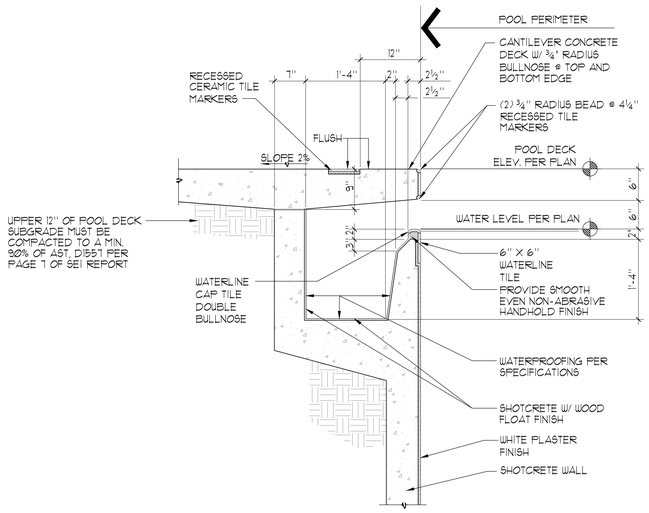

1 TYPICAL GUTTER DETAIL 1"=1'-0"

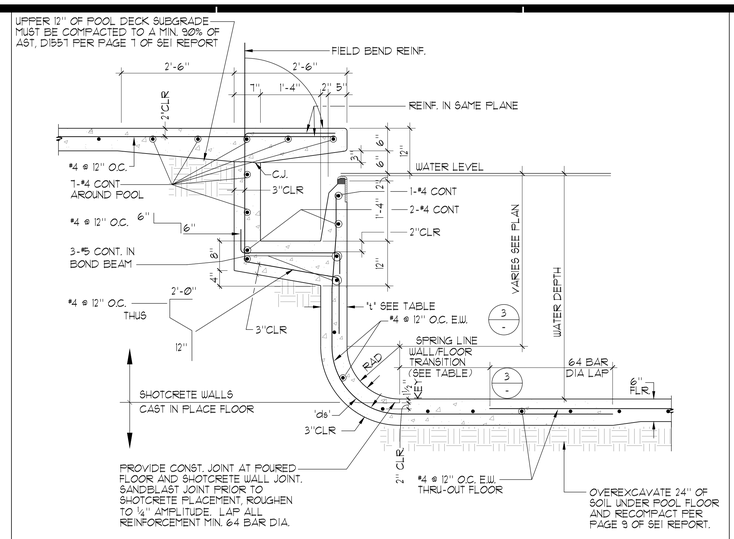

2 POOL WALL 3'-6" TO 5'-0" ¾"=1'-0"

POOL REINFORCEMENT TABLE

WATER DEPTH	't'	'ds'	RADIUS	VERTICAL REINF.	HORIZONTAL REINF.	TRANSITION TO FLOOR REINF. BEYOND END RADIUS
3'-6"	6"	3"	6"	#4 @ 12" O.C.	#4 @ 12" O.C.	24"
3'-7" TO 5'-0"	7"	4"	6" TO 18"	#4 @ 12" O.C.	#4 @ 12" O.C.	24"
5'-1" TO 7'-3"	9"	6"	18" TO 2'-6"	#4 @ 8" O.C.	#4 @ 8" O.C.	24"

CONCRETE NOTES:

1. THE MINIMUM ULTIMATE COMPRESSIVE STRENGTH AT 28 DAYS WITH A Ø.40-Ø.50 WATER/CEMENT RATIO
   POOL = 4000 PSI
   SLABS-ON-GRADE = 4000 PSI
2. CONTINUOUS INSPECTION BY AN APPROVED INSPECTOR IS REQUIRED OF ALL CONCRETE PLACEMENT.
3. ALL CEMENT USED SHALL CONFORM TO A.S.T.M. C-150 TYPE II
4. FINE AND COARSE AGGREGATE SHALL CONFORM TO A.S.T.M. C-33. MAXIMUM SIZE OF AGGREGATE TO BE 1".
5. CONCRETE MIX DESIGNS SHALL BE BASED UPON ACI 318
6. CONCRETE SHALL BE TESTED AND INSPECTED PER SECTION CBC 1705.3 AND ACI 318
7. REMOVAL OF FORMS SHALL COMPLY WITH ACI 318
8. ALL REINFORCING SHALL BE ASTM A-615, GRADE 60, UNLESS OTHERWISE NOTED. LAPS SHALL BE 64 BAR DIA.

SHOTCRETE NOTES:

1. SHOTCRETE SHALL BE WET-MIX AND HAVE A MINIMUM COMPRESSIVE STRENGTH OF 4,000 PSI AT 28 DAYS. SHOTCRETE MATERIAL SHALL HAVE A WATER/CEMENT RATIO OF Ø.40-Ø.50 SHOTCRETE MATERIALS MIXTURE DESIGN PROPORTIONING, PLACEMENT, CURING, AND TESTING SHALL BE PER ACI 318
2. CONTINUOUS INSPECTION BY AN APPROVED INSPECTOR IS REQUIRED OF ALL SHOTCRETE PLACEMENT PER ACI-318.
3. ALL CEMENT USED SHALL CONFORM TO A.S.T.M. C-150 TYPE II
4. FINE AND COARSE AGGREGATE SHALL CONFORM TO A.S.T.M. C-33. MAXIMUM SIZE OF AGGREGATE TO BE ⅜".
5. SHOTCRETE SHALL BE TESTED AND INSPECTED PER CBC 1705.3 AND ACI 318.
6. ANCHOR BOLTS, ANCHORS, DOWELS, INSERTS, ETC. SHALL BE SECURELY TIED IN PLACE PRIOR TO PLACING OF SHOTCRETE.
7. ALL REINFORCEMENT WITHIN SHOTCRETE SHALL MAINTAIN THE LESSER OF 6 BAR DIA. AND 2½" CLEAR NON-CONTACT SPLICES.
8. THE FILM OF LAITANCE WHICH FORMS ON THE SURFACE OF THE SHOTCRETE SHALL BE REMOVED WITHIN APPROXIMATELY TWO HOURS AFTER APPLICATION BY BRUSHING WITH A STIFF BROOM. IF THIS IS NOT REMOVED WITHIN TWO HOURS, IT SHALL BE REMOVED BY THOROUGH WIRE BRUSHING OR SAND BLASTING. CONSTRUCTION JOINTS OVER EIGHT HOURS OLD SHALL BE THOROUGHLY CLEANED WITH AIR AND WATER PRIOR TO RECEIVING SHOTCRETE.
9. ALL REINFORCING SHALL BE ASTM A-615, GRADE 60, UNLESS OTHERWISE NOTED. LAP SPLICES SHALL BE 64 BAR DIA. NON-CONTACT LAP SPLICES SHALL HAVE CLEAR SPARING BETWEEN BARS THE GREATER OF 6 BAR DIA AND 2½" REINFORCING SHALL CONFORM TO ACI 318.

3 REINFORCEMENT TABLE

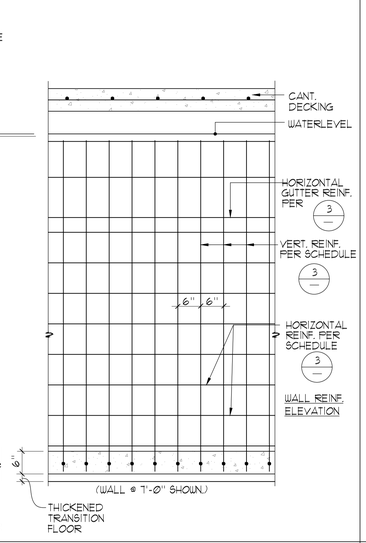

NOTE: UPPER 12" OF POOL DECK SUBGRADE MUST BE COMPACTED TO A MIN. 90% OF AST, D1557 PER PAGE 7 OF SEI REPORT

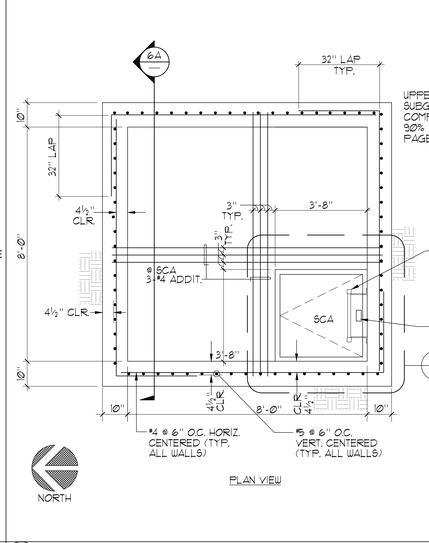

LEGEND
O.C. = ON CENTER
E.W. = EACH WAY
SCA = SURGE CHAMBER ACCESS

UPPER 12" OF POOL DECK SUBGRADE MUST BE COMPACTED TO A MIN. 90% OF AST, D1557 PER PAGE 7 OF SEI REPORT

LANE INTERNATIONAL CORPORATION POLYPROPYLENE VAULT LADDER WITH PULL-UP HANDRAIL. COLOR TO BE BLACK.

LATCH SIDE

6
—

NOTE: OMIT BOTTOM KEYWAYS AND ALL WATERSTOPS AND PROVIDE WOOD FLOAT FINISH IF SHOTCRETE CONSTRUCTION IS USED

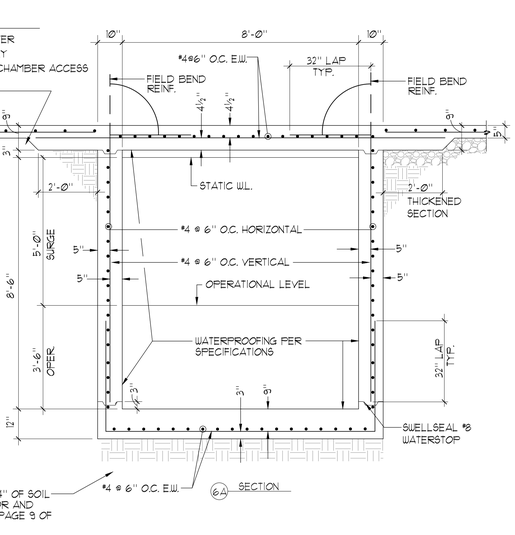

4 POOL WALL 5'-1" TO 7'-3" ¾"=1'-0"

5 OUTDOOR SWIMMING POOL SURGE CHAMBER ½"=1'-0"

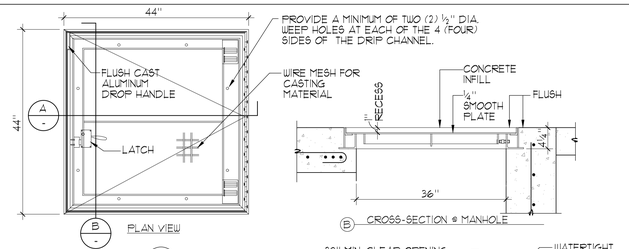

NOTE:

1. MATERIAL: ALUMINUM WITH STAINLESS STEEL BOLTS, NUTS, SPRINGS, SLAM LOCK, HINGES & HOLD OPEN ARM.
2. LOADING: 300 LBS. PER SQ. FOOT.
3. BITUMINOUS COATING IS APPLIED TO AREA OF FRAME IN CONTACT WITH CONCRETE.
4. HINGES TO BE LOCATED OPPOSITE LADDER RUNGS.

MANHOLE SHALL BE U.S.F. FABRICATION INC. #R-TFS-300-36x36 ALUMINUM. 1(800)758-6873.

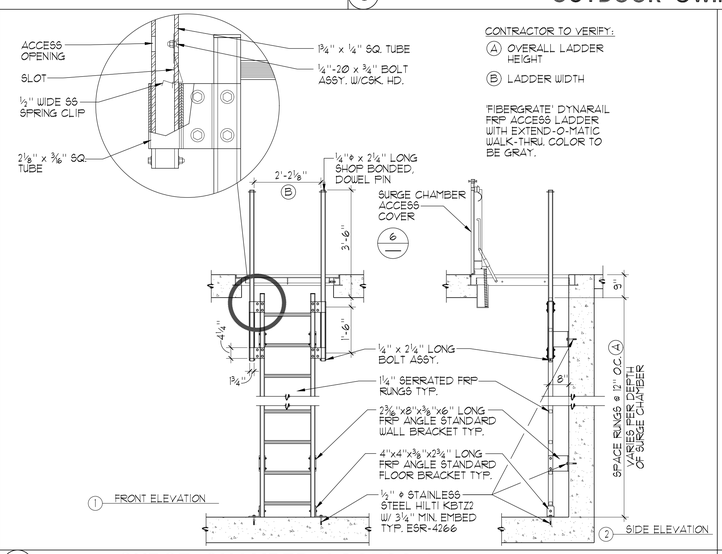

6 SURGE CHAMBER ACCESS COVER 1"=1'-0"

7 SURGE CHAMBER ACCESS LADDER ½" = 1'-0"

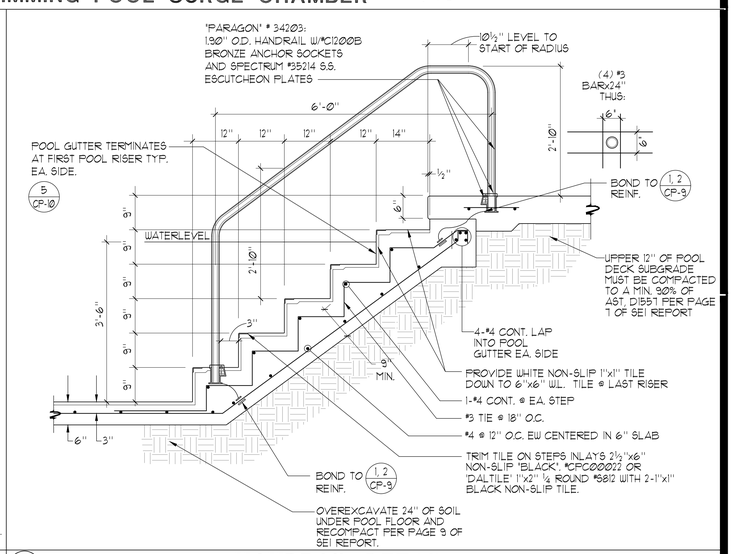

8 HANDRAIL DETAIL ¾"=1'-0"

AGENCY

REVIEWED FOR CODE COMPLIANCE BY:
WILLDAN ENGINEERING
Approval of these plans & specifications shall not be construed to be a permit for, or an approval of any violation of any Federal, State, County or City laws or ordinances. One set of approved plans must be kept on the job until completion.
9:22:11 AM Jul 21, 2025

FLEWELLING & MOODY
architects for education

HEADQUARTERS OFFICE:
815 Colorado Blvd. Suite 200
Los Angeles, California 90041
323.543.8300 fax 323.543.8198
E-Mail: fm-losangeles@flewelling-moody.com

ANTELOPE VALLEY OFFICE:
1035 West Lancaster Bouldvard
Lancaster, California 93534
661.949.0771 FAX 661.949.2843
E-Mail: fm-lancaster@flewelling-moody.com

An Employee Owned Corporation

ARCHITECT
LICENSED ARCHITECT GREGORY S. [illegible] 35802 REN. 07.31.27 STATE OF CALIFORNIA

CONSULTANT
AQUATIC DESIGN GROUP
2226 Faraday Ave. Carlsbad, CA 92008
AquaticDesignGroup.com
760.438.8400

Drawn by:
Check by:
Revisions

No.	Date	Description

All dimensions must be checked at the job by the contractor who accepts full responsibility for their accuracy under the contract. These plans & the specifications in connection therewith have been prepared for a specific site. Any and all responsibility for their use in whole or in part on any other site is hereby disclaimed by Flewelling & Moody.

CITY OF RIDGECREST

SGT. JOHN PINNEY MEMORIAL POOL REPLACEMENT

205 S WARNER ST, RIDGECREST, CA 93555

Drawing Title

COMPETITION POOL DETAILS

Job No. 3055-0100
Date 9/25/2006
Sheet No. CP-5

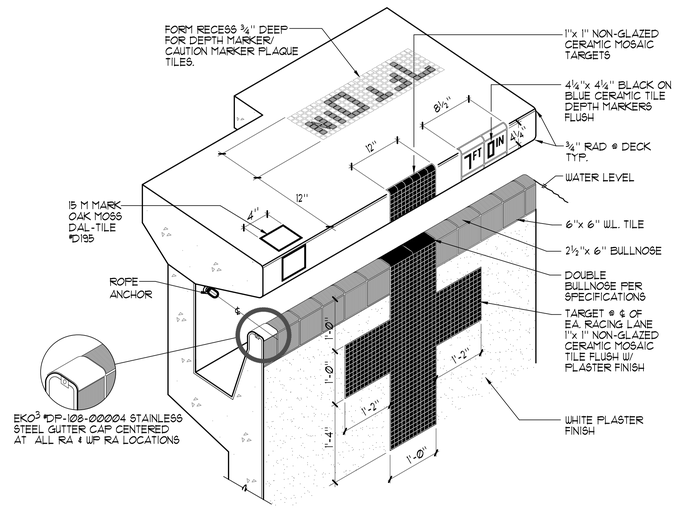

1 DEEP GUTTER PERSPECTIVE NO SCALE

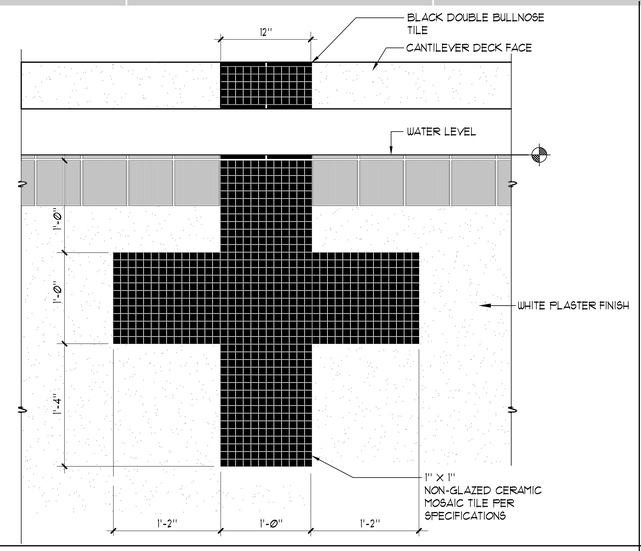

2 END WALL TARGET 1½" = 1'-0"

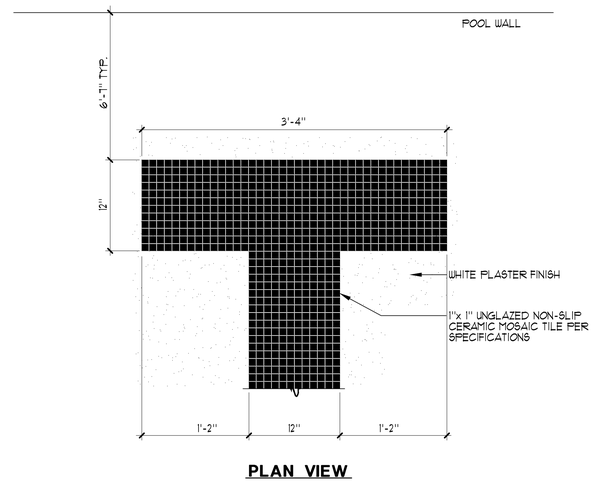

PLAN VIEW

3 RACING LANE LINE 1½"=1'-0"

PROVIDE DEPTH MARKERS ON DECK AND FRONT CANTILEVER DECK FACE (PER DET. 1 SP-6) AT ALL DEPTH MARKER LOCATIONS

4 DEPTH MARKERS 1½" = 1'-0"

MARKERS

SECTION THROUGH TILE

5 "NO RUNNING" / "NO DIVING" MARKERS 1½" = 1'-0"

NOTE: PLACE IN DECK AT ALL DEPTH MARKER LOCATION OF 6'-0" OR LESS.

SILK SCREEN

1. INLAYS DOUBLE GLAZED WHITE SLIP RESISTANT TILE TYP. OF (1) PIECE OVER ¼" MORTAR BED WITH ⅛" GROUT JOINTS. SEE PLAN FOR LOCATION.
2. 1" WIDE RED CIRCLE WITH 1" WIDE RED DIAGONAL LINE.
3. ⅛" BLUE WATER.
4. ⅛" RED TICKS ABOUT THE HEAD.
5. TAN COLOR BODY WITH BLACK OUTLINE, HAIR AND TRUNKS.
6. ⅛" BLACK POOL FLOOR.

6 INTERNATIONAL "NO DIVING" MARKER 3"=1'-0"

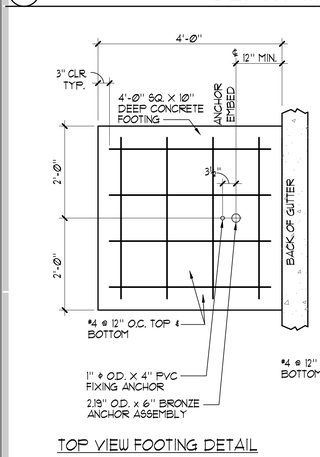

TOP VIEW FOOTING DETAIL

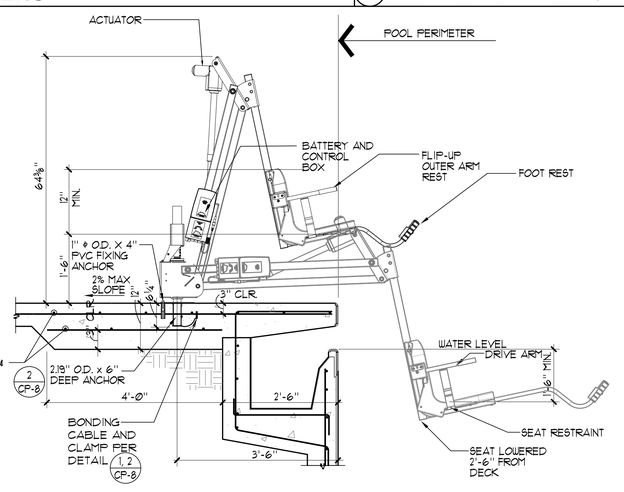

SIDE VIEW A

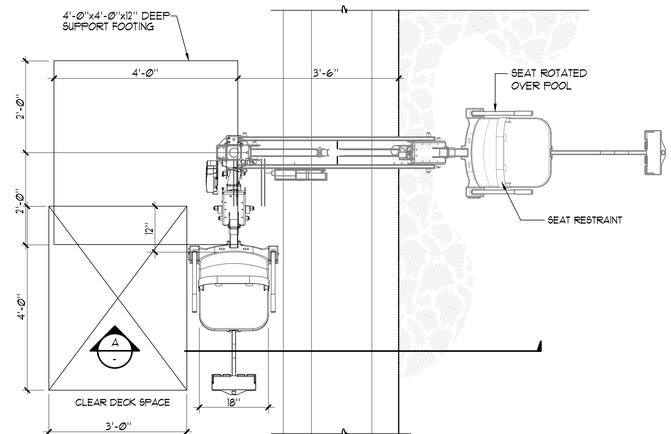

TOP VIEW

7 ACCESSIBLE LIFT ¾"=1'-0"

NOTES:

1. 'AQUA CREEK' MIGHTY 400 #F-MTY400 (350 lb. MIN. AND 400 lb. MAX. LIFTING CAPACITY)
2. GUSSET COVER PLATE TO BE ATTACHED REQUIRING A TOOL FOR REMOVAL.
3. CONTRACTOR SHALL PROVIDE COVER FOR LIFT 'AQUA CREEK'; EXTRA BATTERY PACK 'AQUA CREEK' #F-004AB; AND TRANSPORTER CART 'AQUA CREEK' #F-MTTC.
4. REFER TO ARCH. PLANS FOR LOCATION OF DISABLED LIFT BATTERY CHARGE STATION. PROVIDE 'AQUA CREEK' CHARGER # F-044CH.
5. POOL LIFT SHALL BE LOCATED WHERE THE WATER LEVEL IS AT LEAST 36" AND DOES NOT EXCEED 48" DEEP , UNLESS ENTIRE POOL IS GREATER THAT 48" DEEP. (CBC SECTION 11B-1009.2.1)
6. ON THE RAISED POSITION, THE CENTERLINE OF THE SEAT SHALL BE LOCATED OVER THE DECK AND 16" MINIMUM FROM THE EDGE OF THE POOL. THE DECK SURFACE BETWEEN THE CENTERLINE OF THE SEAT AND THE POOL EDGE SHALL HAVE A 2% MAX. SLOPE. (CBC SECTION 11B-1009.2.2)
7. CLEAR DECK SPACE SHALL BE PROVIDED ON SIDE OF SEAT OPPOSITE THE WATER PARALLEL TO THE WATER 36" WIDE X 48" MINIMUM FROM A LINE LOCATED 12" BEHIND THE REAR EDGE OF THE SEAT. THE CLEAR SPACE SHALL HAVE A 2% MAX. SLOPE. (CBC SECTION 11B-1009.2.3)
8. THE HEIGHT OF THE LIFT SEAT SHALL BE DESIGNED TO ALLOW A STOP AT 17" MIN. TO 19" MAX. MEASURED FROM THE DECK TO THE TOP OF THE SEAT SURFACE WHEN IN THE RAISED POSITION. (CBC SECTION 11B-1009.2.4)
9. THE SEAT SHALL BE RIGID AND 17" MIN. TO 19" MAX. WIDE. THE LIFT SEAT SHALL HAVE A BACK SUPPORT 12" MIN. TALL. (CBC SECTION 11B-1009.2.4)
10. FOOTRESTS SHALL BE PROVIDED, EXCEPT FOR SPA LIFTS, AND SHALL MOVE WITH THE SEAT. LIFT SHALL HAVE TWO ARMRESTS. THE ARMREST POSITIONED OPPOSITE THE WATER SHALL BE REMOVABLE OR SHALL FOLD CLEAR OF THE SEAT WHEN THE SEAT IS IN THE RAISED POSITION. (CBC SECTION 11B-1009.2.6)
11. THE LIFT SHALL BE CAPABLE OF UNASSISTED OPERATION FROM BOTH THE DECK AND WATER LEVELS. CONTROLS AND OPERATING MECHANISMS SHALL BE OPERABLE WITH ONE HAND AND SHALL BE UNOBSTRUCTED WHEN THE LIFT IS IN USE (CBC SECTION 11B-309.4.). LIFT MUST BE STABLE AND NOT PERMIT UNINTENDED MOVEMENT WHEN A PERSON IS GETTING INTO OR OUT OF THE SEAT. (CBC SECTION 11B-1009.2.1)
12. THE LIFT SHALL BE DESIGNED SO THAT THE SEAT WILL SUBMERGE TO A WATER DEPTH OF 18" MIN. BELOW THE STATIONARY WATER LEVEL. (CBC SECTION 11B-1009.2.8)
13. LIFT SEAT MUST HAVE AN OCCUPANT RESTRAINT FOR USE BY THE OCCUPANT OF THE SEAT AND THE RESTRAINT MUST MEET THE STANDARDS FOR OPERABLE CONTROLS IN COMPLIANCE WITH CBC SECTION 11B-1009.2.4 AND SECTION 11B-309.

AGENCY

REVIEWED FOR CODE COMPLIANCE BY: WILLDAN ENGINEERING

Approval of these plans & specifications shall not be construed to be a permit for, or an approval of any violation of any Federal, State, County or City laws or ordinances. One set of approved plans must be kept on the job until completion.

9:22:11 AM Jul 21, 2025

FLEWELLING & MOODY
architects *for* education

HEADQUARTERS OFFICE:
815 Colorado Blvd. Suite 200
Los Angeles, California 90041
323.543.8300 fax 323.543.8198
E-Mail: fm-losangeles@flewelling-moody.com

ANTELOPE VALLEY OFFICE:
1035 West Lancaster Bouldvard
Lancaster, California 93534
661.949.0771 FAX 661.949.2843
E-Mail: fm-lancaster@flewelling-moody.com

An Employee Owned Corporation

ARCHITECT

LICENSED ARCHITECT GREGORY S. [illegible] No. 35802 REN. 07/31/27 STATE OF CALIFORNIA

CONSULTANT

AQUATIC DESIGN GROUP
2226 Faraday Ave. Carlsbad, CA 92008
AquaticDesignGroup.com
760.438.8400

Drawn by:

Check by:

Revisions

No.	Date	Description

All dimensions must be checked at the job by the contractor who accepts full responsibility for their accuracy under the contract. These plans & the specifications in connection therewith have been prepared for a specific site. Any and all responsibility for their use in whole or in part on any other site is hereby disclaimed by Flewelling & Moody.

CITY OF RIDGECREST

SGT. JOHN PINNEY MEMORIAL POOL REPLACEMENT

205 S WARNER ST, RIDGECREST, CA 93555

Drawing Title

COMPETITION POOL DETAILS

Job No. 3055-0100

Sheet No. **CP-6**

Date 9/25/2006

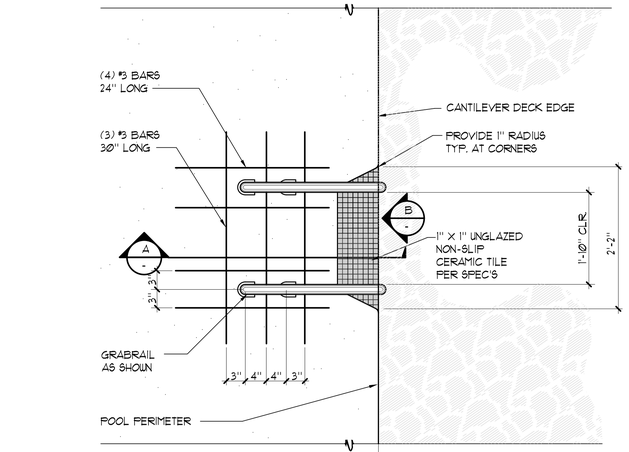

PLAN

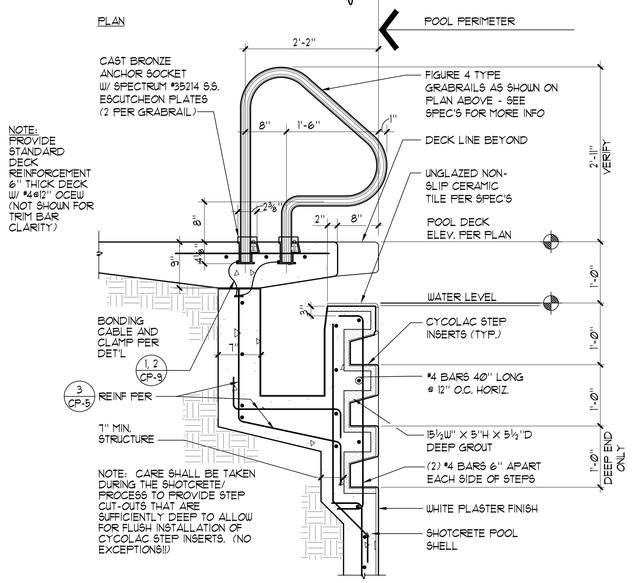

SECTION A

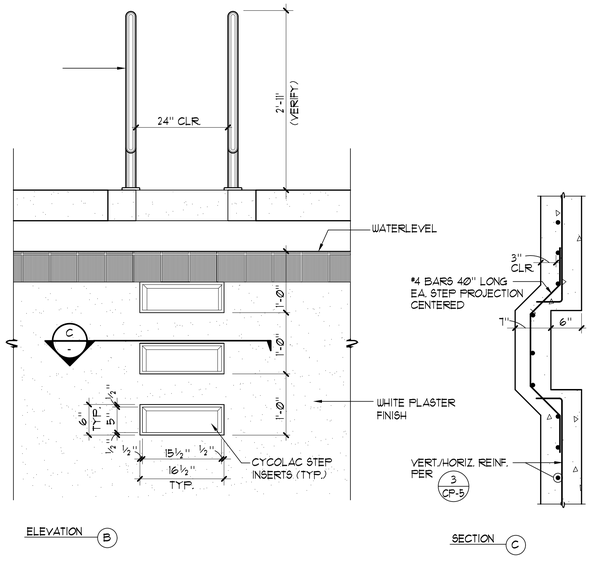

ELEVATION B

SECTION C

1 GRABRAIL WITH STEPS 1"=1'-Ø"

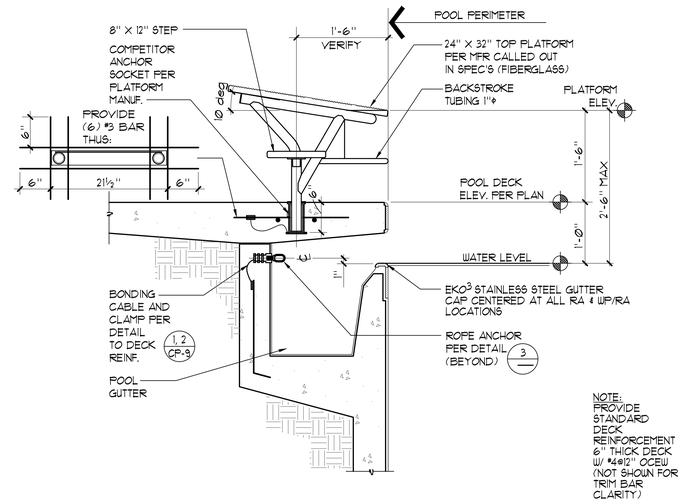

2 RACING PLATFORM 1"=1'-Ø"

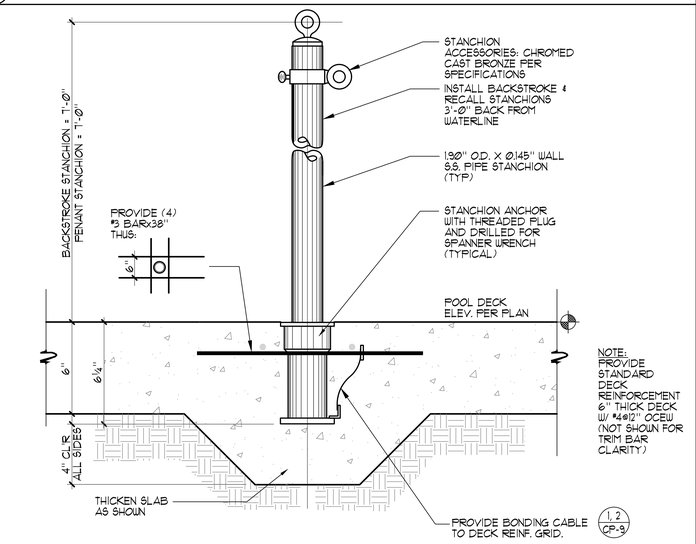

4 STANCHION POST/ANCHOR 3"=1'-Ø"

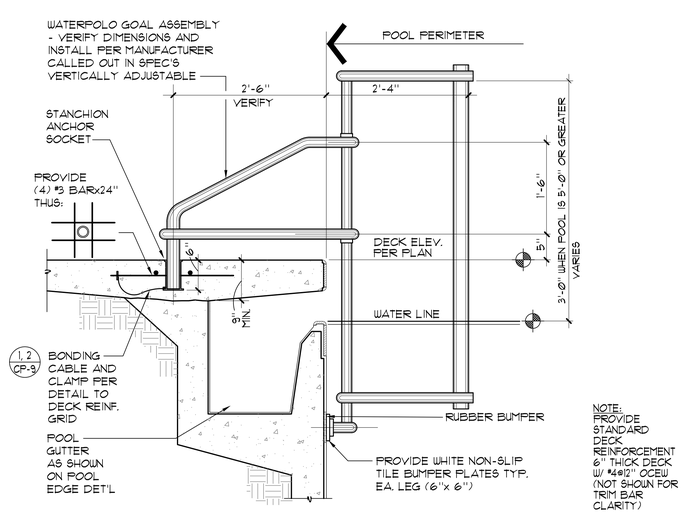

6 WATERPOLO GOAL 1"=1'-Ø"

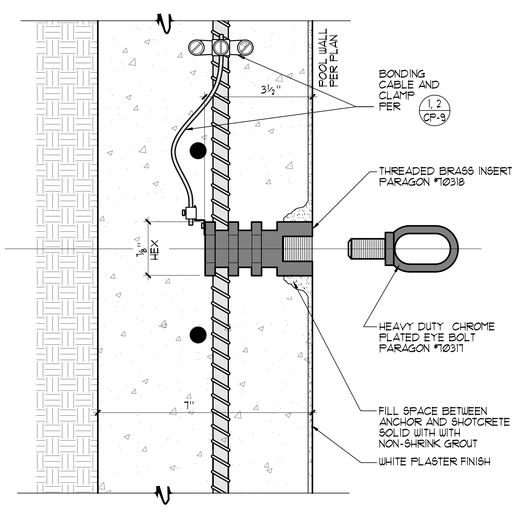

3 ROPE ANCHOR ½" = 1"

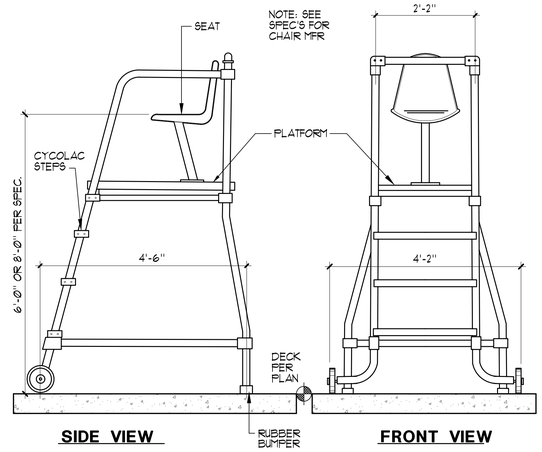

SIDE VIEW FRONT VIEW

5 MOVEABLE LIFEGUARD CHAIR ¾"=1'-Ø"

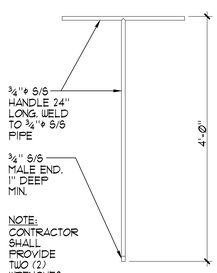

TEE WRENCH

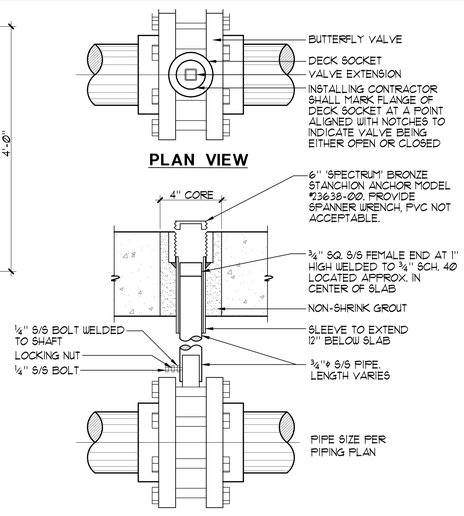

PLAN VIEW

SECTION

NO SCALE

7 SURGE CHAMBER BUTTERFLY VALVE / EXTENSION DETAIL

AGENCY

REVIEWED FOR CODE COMPLIANCE BY: WILLDAN ENGINEERING

Approval of these plans & specifications shall not be construed to be a permit for, or an approval of any violation of any Federal, State, County or City laws or ordinances. One set of approved plans must be kept on the job until completion.

9:22:11 AM Jul 21, 2025

FLEWELLING & MOODY
architects *for* education

HEADQUARTERS OFFICE:
815 Colorado Blvd. Suite 200
Los Angeles, California 90041
323.543.8300 fax 323.543.8198
E-Mail: fm-losangeles@flewelling-moody.com

ANTELOPE VALLEY OFFICE:
1035 West Lancaster Bouldvard
Lancaster, California 93534
661.949.0771 FAX 661.949.2843
E-Mail: fm-lancaster@flewelling-moody.com

An Employee Owned Corporation

ARCHITECT

LICENSED ARCHITECT GREGORY S. ... No. C-35802 REN. 07/31/27 STATE OF CALIFORNIA

CONSULTANT

AQUATIC DESIGN GROUP
2226 Faraday Ave. Carlsbad, CA 92008
AquaticDesignGroup.com
760.438.8400

Drawn by:

Check by:

Revisions

No.	Date	Description

All dimensions must be checked at the job by the contractor who accepts full responsibility for their accuracy under the contract. These plans & the specifications in connection therewith have been prepared for a specific site. Any and all responsibility for their use in whole or in part on any other site is hereby disclaimed by Flewelling & Moody.

CITY OF RIDGECREST

SGT. JOHN PINNEY MEMORIAL POOL REPLACEMENT

205 S WARNER ST, RIDGECREST, CA 93555

Drawing Title

COMPETITION POOL DETAILS

Job No. 3055-0100

Sheet No. CP-7

Date 9/25/2006

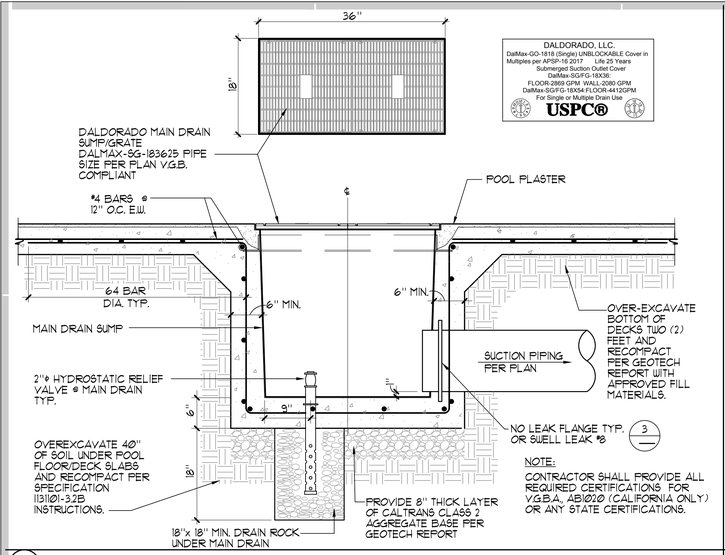

1 MAIN DRAIN 1"=1'-0"

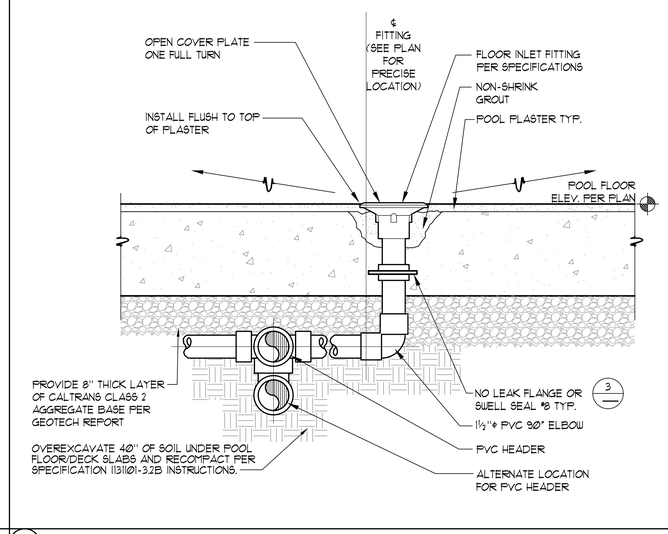

2 FLOOR INLET 3"=1'-0"

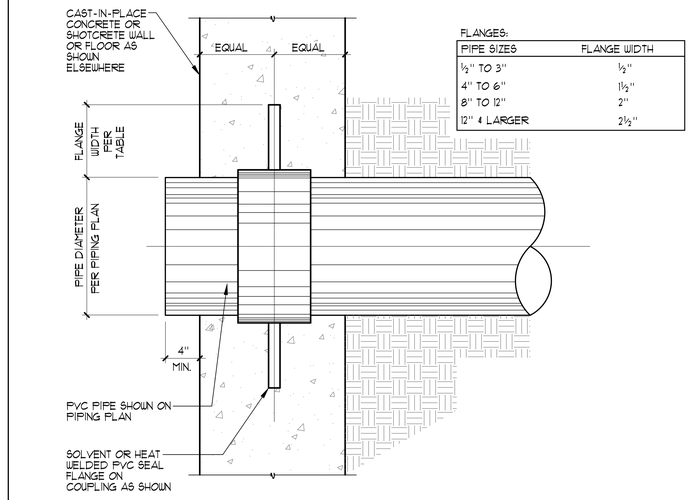

FLANGES:

PIPE SIZES	FLANGE WIDTH
½" TO 3"	½"
4" TO 6"	1½"
8" TO 12"	2"
12" & LARGER	2½"

3 WATER STOP DETAIL NO SCALE

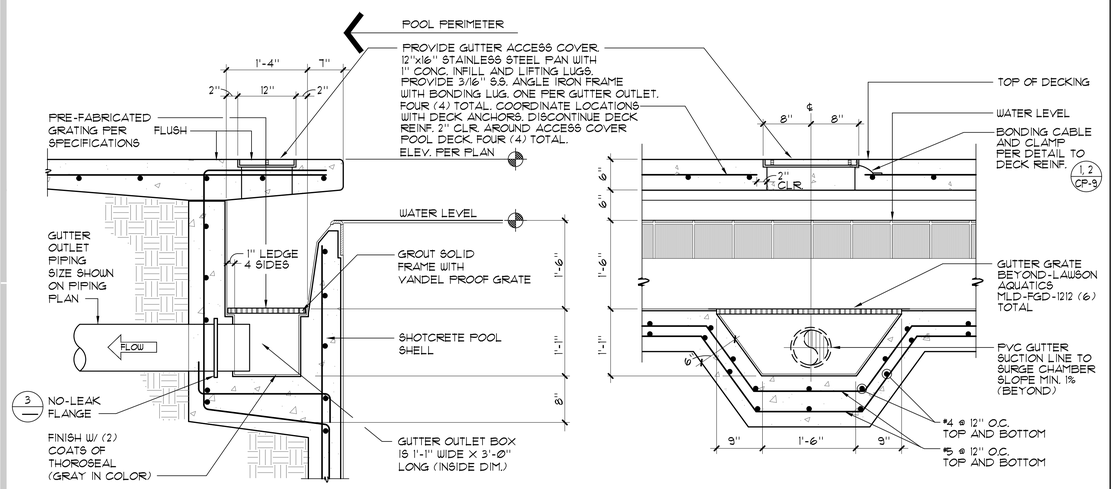

4 GUTTER OUTLET 1"=1'-0"

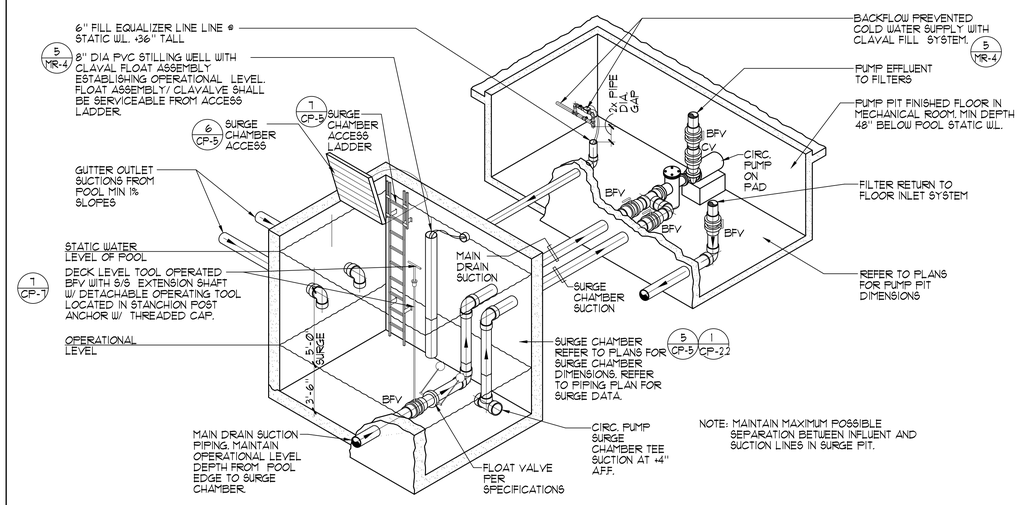

5 SURGE CHAMBER PIPING SCHEMATIC NO SCALE

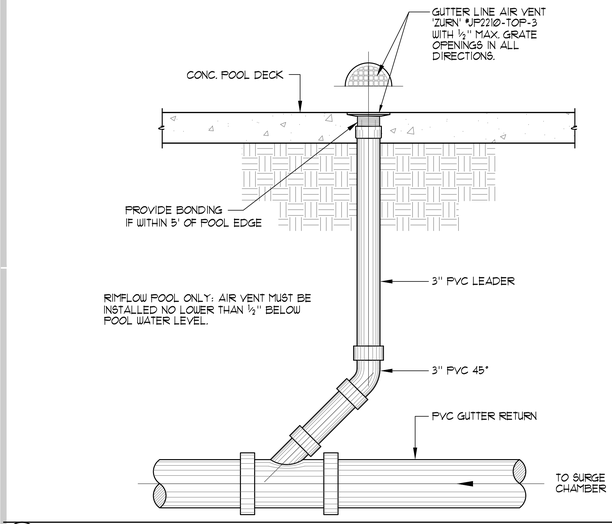

6 AIR VENT 1"=1'-0"

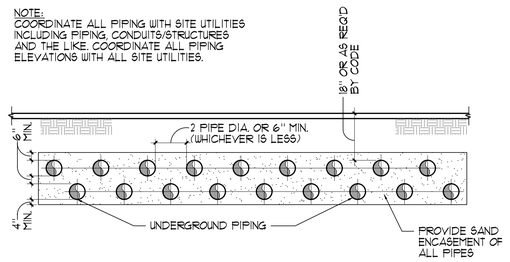

7 STACKED UNDERGROUND PIPING NO SCALE

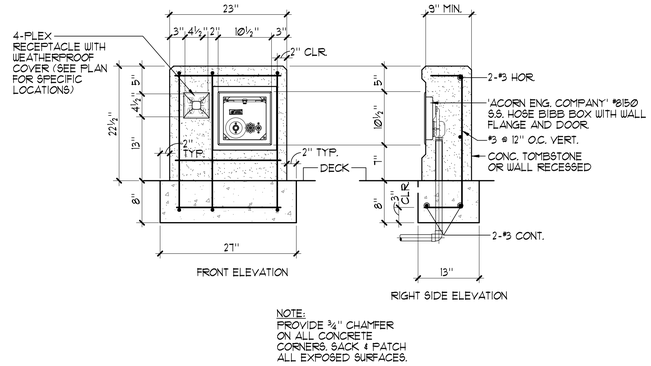

NOTE:
PROVIDE ¾" CHAMFER ON ALL CONCRETE CORNERS. SACK & PATCH ALL EXPOSED SURFACES.

8 HOSE BIBB 1"=1'-0"

AGENCY

REVIEWED FOR CODE COMPLIANCE BY: WILLDAN ENGINEERING

Approval of these plans & specifications shall not be construed to be a permit for, or an approval of any violation of any Federal, State, County or City laws or ordinances. One set of approved plans must be kept on the job until completion.

9:22:11 AM Jul 21, 2025

FLEWELLING & MOODY
architects *for* education

HEADQUARTERS OFFICE:
815 Colorado Blvd. Suite 200
Los Angeles, California 90041
323.543.8300 fax 323.543.8198
E-Mail: fm-losangeles@flewelling-moody.com

ANTELOPE VALLEY OFFICE:
1035 West Lancaster Bouldvard
Lancaster, California 93534
661.949.0771 FAX 661.949.2843
E-Mail: fm-lancaster@flewelling-moody.com

An Employee Owned Corporation

ARCHITECT

LICENSED ARCHITECT GREGORY S. [illegible] No. C-35802 REN. 07/31/27 STATE OF CALIFORNIA

CONSULTANT

AQUATIC
DESIGN GROUP
2226 Faraday Ave. Carlsbad, CA 92008
AquaticDesignGroup.com
760.438.8400

Drawn by:

Check by:

Revisions

No.	Date	Description

All dimensions must be checked at the job by the contractor who accepts full responsibility for their accuracy under the contract. These plans & the specifications in connection therewith have been prepared for a specific site. Any and all responsibility for their use in whole or in part on any other site is hereby disclaimed by Flewelling & Moody.

CITY OF RIDGECREST

SGT. JOHN PINNEY MEMORIAL POOL REPLACEMENT

205 S WARNER ST, RIDGECREST, CA 93555

Drawing Title

COMPETITION POOL DETAILS

Job No. 3055-0100

Sheet No. **CP-8**

Date 9/25/2006

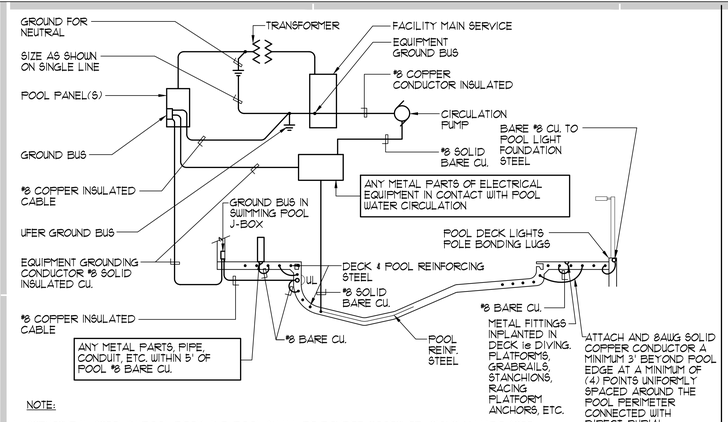

NOTE:

1. STRUCTURAL STEEL IN POOL DECK AND POOL SHALL BE BONDED TOGETHER (TIGHTLY MADE STEEL TIE-WIRES ARE APPROVED FOR BONDING STRUCTURAL ELEMENTS).
2. BONDING CONNECTOR TO COMMON GRID. (POOL STEEL MAY BE USED FOR THAT PURPOSE) SHALL BE MADE BY PRESSURE CONNECTORS OR CLAMPS OF BRASS, COPPER, OR COPPER ALLOY.
3. ALL GROUND BUSES SHALL BE SIZED FOR CONNECTION TO AWG SIZE 8 WIRE PROVIDING ONE SPARE TERMINAL.
4. GROUND AND BOND IN ACCORDANCE WITH ARTICLE 680 OF THE CALIFORNIA ELECTRICAL CODE. ie. LADDERS, FENCING, POLE LIGHTS, DIVING & STARTING STANCHIONS, DISABLED LIFT ETC.
5. PROVIDE BONDING OF AUTOMATIC POOL COVER MOTORS REGARDLESS OF PROXIMITY TO POOL.

1 TYPICAL POOL BONDING AND GROUND DETAIL

NO SCALE

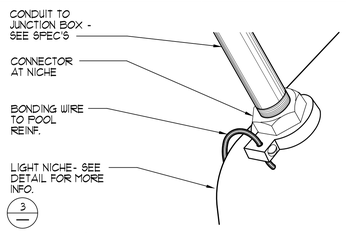

NICHE CONNECTOR

NO SCALE

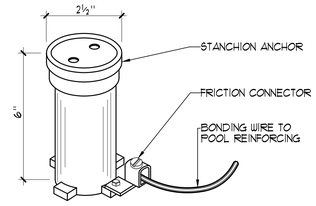

STANCHION ANCHOR

NO SCALE

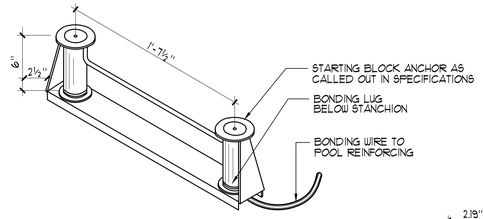

STARTING BLOCK ANCHOR

NO SCALE

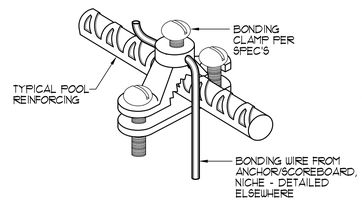

BONDING CLAMP

NO SCALE

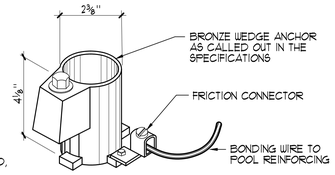

WEDGE ANCHOR

NO SCALE

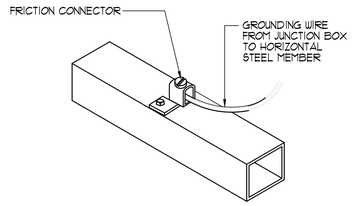

SCOREBOARD ELEC. GROUNDING

NO SCALE

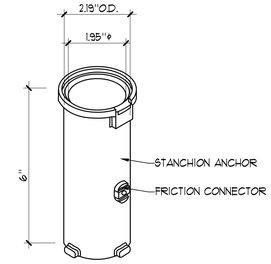

ACCESSIBLE LIFT STANCHION ANCHOR

NO SCALE

2 BONDING DETAILS

NO SCALE

UNDERWATER LIGHT NOTES:

1. ALL CONDUITS IN POOL LIGHTING SYSTEM TO BE A MINIMUM OF 1"ϕ.
2. CONDUCTORS TO POOL J-BOXES SHALL BE MINIMUM 2-#8 & 1#8 (SEE UNDERWATER LIGHT PLAN) SOLID UNBROKEN TO MAIN PANEL ISOLATED GROUND BUSS. THIS BUSS IS TO BE CONNECTED WITH SOLID INSULATED #8 COPPER WIRE TO UFER & COLDWATER GROUNDING LUG ON GROUNDING BUSS. UPSIZE CONDUCTORS AS REQUIRED FOR HOMERUNS EXCEEDING 1ØØ'.
3. ALL BRASS POOL J-BOXES SHALL BE FLUSH MOUNTED IN WALLS. IF FLUSH MOUNTING IS NOT POSSIBLE THEN MOUNTING SHALL BE SURFACE MOUNTED AND CONCRETE ENCASED.
4. CONDUITS WHERE ALLOWED BY CODE SHALL BE P.V.C. (POLYVINYL CHLORIDE) FROM WET NICHES TO BRASS J-BOXES TO LIGHTING PANEL. ALL CONDUITS IN FREE AIR SPACE AND ALL RISERS SHALL BE RED BRASS TYPICAL. PVC CONDUITS SHALL BE SOLVENT WELDED WITH P-1Ø PURPLE PRIMER AND 711 GRAY HEAVY BODIED GLUE.
5. LIGHTING CONTACTORS SHALL BE 'ALLEN-BRADLEY' #5ØØ L± OR EQUAL MOUNTED IN A NEMA 12 HINGED COVER - LOCKABLE ENCLOSURE. CONTACTORS TO BE SWITCHED BY MOMENTARY SWITCH EQUAL TO 'HUBBELL' #1551 MOUNTED IN J-BOX IN MECHANICAL EQUIPMENT ROOM. PROVIDE REMOTE UNDERWATER LIGHT SWITCH IN POOL BUILDING CONTROL ROOM.
6. BRASS POOL J-BOXES SHALL BE 'HYDREL' #119 ± W/1" HUBS OR EQUAL. (NO DIE CAST BOXES).
7. STRINGS SHALL BE PULLED IN ALL CONDUITS PRIOR TO PLACEMENT OF CONCRETE.
8. LOCAL, COUNTY OR CITY CODES SHALL BE ADHERED TO. SPECIFICATIONS TO BE IN ACCORDANCE WITH SECTION 68Ø OF LATEST C.E.C. BOOK.
9. PROVIDE PULL BOXES AS MAY BE REQUIRED FOR RUNS EXCEEDING 15Ø FT. OR DUE TO CHANGES IN GRADE OR DIRECTION.
10. CONTRACTOR SHALL TEST UNDERWATER POOL LIGHT GFIC CIRCUITS AND PROVIDE LETTER TO ARCHITECT AND OWNER UPON SUCCESSFUL TEST.
11. SEAL CONDUIT OPENING IN LIGHT NICHE WITH SILICON CAULKING AFTER LIGHT IS INSTALLED.
12. PRIOR TO LIGHT INSTALLATION, PROVIDE MINIMUM 1Ø PSI PRESSURE TEST ON ALL POOL LIGHT CONDUITS FOR FOUR (4) HOURS OBSERVED BY INSPECTOR OF RECORD. MAINTAIN PRESSURE UNTIL ALL DECKS ARE POURED.

3 UNDERWATER LED LIGHT

1½"=1'-Ø"

FRONT ELEVATION

RIGHT SIDE ELEVATION

NOTE:
PROVIDE ¾" CHAMFER ON ALL CONCRETE CORNERS. SACK & PATCH ALL EXPOSED SURFACES.

4 UNDERWATER LIGHT JUNCTION BOX CONCRETE SURROUND DETAIL

1"=1'-Ø"

TABLE 'A'	
POOL TYPE	OCCUPANCY LOAD AT 1:2Ø
SWIMMING POOL	314
ACTIVITY POOL	16Ø
INSTRUCTIONAL POOL	1ØØ

A SECTION
6" = 1'-Ø"

SIGNAGE NOTES AND SPECIFICATIONS:

① ⅛" THICK PAINTED ALUMINUM BACKER PANEL.

② SILKSCREENED COPY/GRAPHICS WITH SATIN CLEAR COAT.

③ ¼" THICK PAINTED ALUMINUM FACE PANEL WITH SILKSCREENED COPY/GRAPHICS. ATTACH TO ⅛" THICK PAINTED ALUMINUM BACKER PANEL USING VHB TAPE AND SILICONE ADHESIVE.

④ 2" WIDE x ½" THICK PAINTED ALUMINUM SIGN FRAME ADHERED TO ⅛" THICK PAINTED ALUMINUM BACKER USING 'LORD' ADHESIVE AS REQUIRED. VERTICAL SECTIONS OF FRAME TO BE RECTANGULAR TUBE. FILL AND SAND SEAM ALONG EDGE AND FACE PRIOR TO PAINTING.

NOTES:

1. COORDINATE SIGNAGE PLACEMENT AND COLOR SCHEME WITH ARCHITECT/OWNER PRIOR TO INSTALLATION.
2. CONTRACTOR TO PROVIDE SHOP DRAWINGS OF PROPOSED SIGNAGE AND MOUNTING DETAIL FOR REVIEW.

REQUIRED SIGNAGE:

1. ALL SIGNS SHALL HAVE CLEARLY LEGIBLE LETTERS OR NUMBERS NOT LESS THAN 4 INCHES HIGH UNLESS OTHERWISE NOTED; AFFIXED TO A WALL, POLE, GATE, OR SIMILAR PERMANENT STRUCTURE IN A LOCATION VISIBLE TO ALL POOL USERS.
   - A. POOL USER CAPACITY SIGN: A SIGN SHALL INDICATE THE MAXIMUM NUMBER OF POOL USERS PERMITTED FOR EACH POOL.
   - B. NO DIVING SIGN: SIGNS SHALL BE POSTED IN CONSPICUOUS PLACES AND SHALL STATE 'NO DIVING' AT POOLS WITH A MAXIMUM WATER DEPTH OF 6 FEET OR LESS.
   - C. NO LIFEGUARD SIGN: WHERE NO LIFEGUARD SERVICE IS PROVIDED, A WARNING SIGN SHALL BE POSTED STATING, "NO LIFEGUARD ON DUTY." THE SIGN ALSO SHALL STATE IN LETTERS AT LEAST 1 INCH HIGH, "CHILDREN SHOULD NOT USE POOL WITHOUT ADULT SUPERVISION."
   - D. ARTIFICIAL RESPIRATION AND CPR SIGN: AN ILLUSTRATED DIAGRAM WITH TEXT AT LEAST ¼ INCH HIGH OF ARTIFICIAL RESPIRATION AND CPR PROCEDURES SHALL BE POSTED.
   - E. EMERGENCY SIGN: THE EMERGENCY TELEPHONE NUMBER 911, THE NUMBER OF THE NEAREST EMERGENCY SERVICES AND THE NAME AND STREET ADDRESS OF THE POOL FACILITY SHALL BE POSTED.
   - F. WARNING SIGN FOR A SPA POOL: A WARNING SIGN FOR THE SPA POOLS SHALL BE POSTED, STATING "CAUTION" AND SHALL INCLUDE THE FOLLOWING LANGUAGE IN LETTERS AT LEAST 1 INCH HIGH:
      1. ELDERLY PERSONS, PREGNANT WOMEN, INFANTS AND THOSE WITH HEALTH CONDITIONS REQUIRING MEDICAL CARE SHOULD CONSULT WITH A PHYSICIAN BEFORE ENTERING THE SPA.
      2. CHILDREN SHOULD NOT USE SPA WITHOUT ADULT SUPERVISION.
      3. HOT WATER IMMERSION WHILE UNDER THE INFLUENCE OF ALCOHOL, NARCOTICS, DRUGS OR MEDICINES MAY LEAD TO SERIOUS CONSEQUENCES AND IS NOT RECOMMENDED.
      4. DO NOT USE ALONE.
      5. LONG EXPOSURE MAY RESULT IN HYPERTHERMIA, NAUSEA, DIZZINESS OR FAINTING.
   - G. EMERGENCY SHUT OFF: IN LETTERS AT LEAST ONE INCH HIGH A SIGN SHALL BE POSTED AT THE SPA EMERGENCY SHUT OFF SWITCH STATING "EMERGENCY SHUT OFF SWITCH."
   - H. NO USE AFTER DARK: WHERE POOLS WERE CONSTRUCTED FOR WHICH LIGHTING WAS NOT REQUIRED A SIGN SHALL BE POSTED AT EACH POOL ENTRANCE ON THE OUTSIDE OF THE GATE(S) STATING, "NO USE OF POOL ALLOWED AFTER DARK."
   - I. KEEP CLOSED: A SIGN SHALL BE POSTED ON THE EXTERIOR SIDE OF GATES AND DOORS LEADING INTO THE POOL ENCLOSURE AREA STATING, "KEEP CLOSED."
   - J. DIARRHEA: A SIGN IN LETTERS AT LEAST 1 INCH HIGH AND IN A LANGUAGE OR DIAGRAM THAT IS CLEARLY STATED SHALL BE POSTED AT THE ENTRANCE AREA OF A PUBLIC POOL WHICH STATES THAT PERSONS HAVING CURRENTLY ACTIVE DIARRHEA OR WHO HAVE HAD ACTIVE DIARRHEA WITHIN THE PREVIOUS 14 DAYS SHALL NOT BE ALLOWED TO ENTER THE POOL WATER.
2. DIRECTION OF FLOW SIGNAGE AND LABELS.
   - A. THE DIRECTION OF FLOW FOR THE RECIRCULATION EQUIPMENT SHALL BE LABELED CLEARLY WITH DIRECTIONAL SYMBOLS SUCH AS ARROWS ON ALL PIPING IN THE EQUIPMENT AREA.
   - B. WHERE THE RECIRCULATION EQUIPMENT FOR MORE THAN ONE POOL IS LOCATED ON SITE, THE EQUIPMENT SHALL BE MARKED AS TO WHICH POOL THE SYSTEM SERVES.
   - C. VALVES AND PLUMBING LINES SHALL BE LABELED CLEARLY WITH THE SOURCE OR DESTINATION DESCRIPTIONS.

5 POOL SIGNAGE DETAIL

¾"=1'-Ø"

AGENCY

REVIEWED FOR CODE COMPLIANCE BY: WILLDAN ENGINEERING

Approval of these plans & specifications shall not be construed to be a permit for, or an approval of any violation of any Federal, State, County or City laws or ordinances. One set of approved plans must be kept on the job until completion.

9:22:11 AM Jul 21, 2025

FLEWELLING & MOODY
architects *for* education

HEADQUARTERS OFFICE:
815 Colorado Blvd. Suite 200
Los Angeles, California 90041
323.543.8300 fax 323.543.8198
E-Mail: fm-losangeles@flewelling-moody.com

ANTELOPE VALLEY OFFICE:
1035 West Lancaster Bouldvard
Lancaster, California 93534
661.949.0771 FAX 661.949.2843
E-Mail: fm-lancaster@flewelling-moody.com

An Employee Owned Corporation

ARCHITECT

LICENSED ARCHITECT GREGORY S. [illegible] No. C-35802 REN. 07/31/27 STATE OF CALIFORNIA

CONSULTANT

AQUATIC DESIGN GROUP
2226 Faraday Ave. Carlsbad, CA 92008
AquaticDesignGroup.com
760.438.8400

Drawn by:

Check by:

Revisions

No.	Date	Description

All dimensions must be checked at the job by the contractor who accepts full responsibility for their accuracy under the contract. These plans & the specifications in connection therewith have been prepared for a specific site. Any and all responsibility for their use in whole or in part on any other site is hereby disclaimed by Flewelling & Moody.

CITY OF RIDGECREST

SGT. JOHN PINNEY MEMORIAL POOL REPLACEMENT

205 S WARNER ST, RIDGECREST, CA 93555

Drawing Title

COMPETITION POOL DETAILS

Job No. 3055-0100

Sheet No. CP-9

Date 9/25/2006

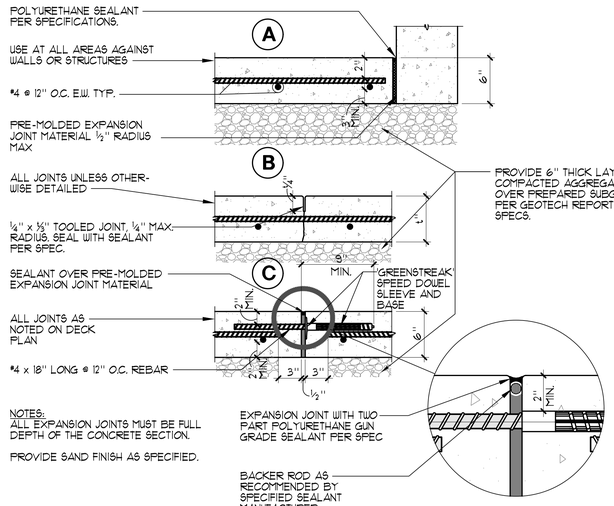

1 DECK DETAILS 1½"=1'-Ø"

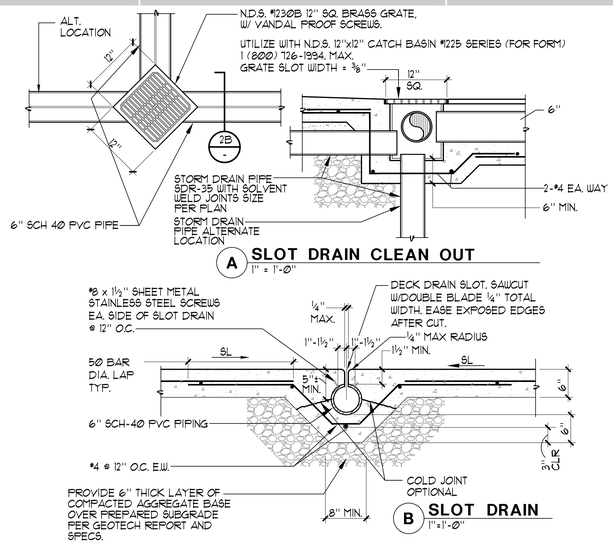

2 SLOT DRAIN 1"=1'-Ø"

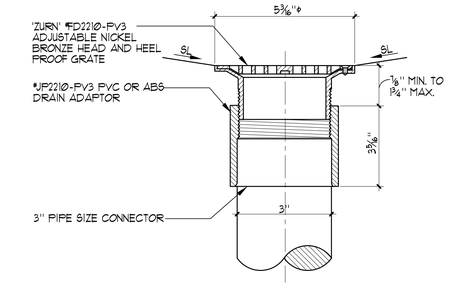

3 DECK/AREA DRAIN ½"=1"

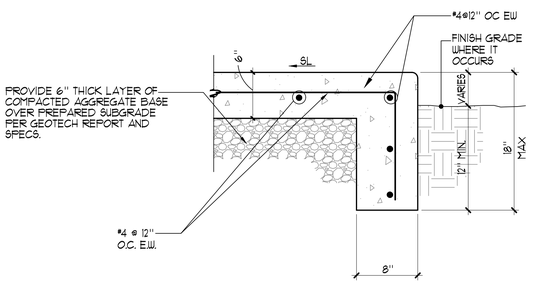

4 TOE DOWN DECK DETAIL 1½"=1'-Ø"

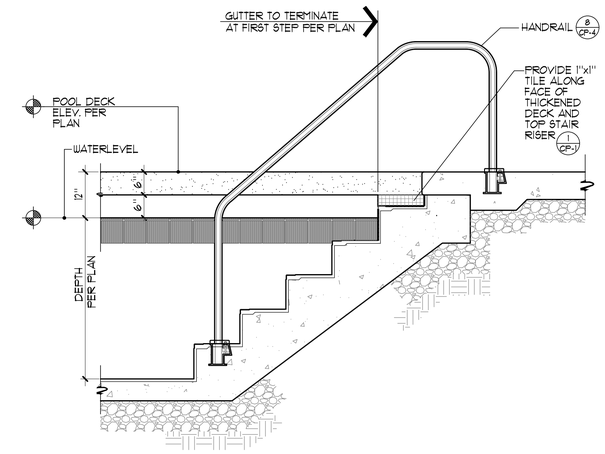

5 GUTTER EDGE AT STAIRS ¾"=1'-Ø"

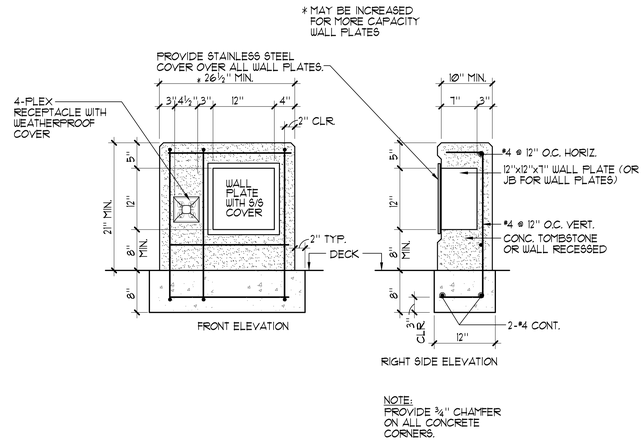

6 TIMING SYSTEM WALL PLATE CONCRETE SURROUND DETAIL 1"=1'-Ø"

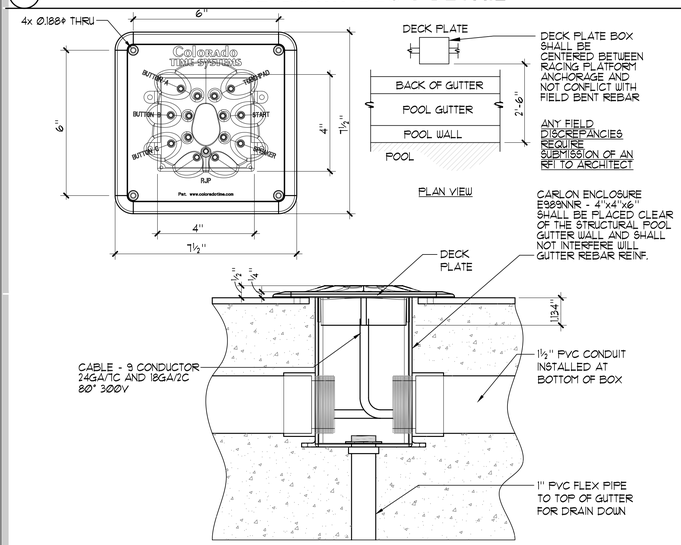

7 DECK PLATE DETAIL (UNDER RACING PLATFORM) NO SCALE

AGENCY

REVIEWED FOR CODE COMPLIANCE BY: WILLDAN ENGINEERING

Approval of these plans & specifications shall not be construed to be a permit for, or an approval of any violation of any Federal, State, County or City laws or ordinances. One set of approved plans must be kept on the job until completion.

9:22:11 AM Jul 21, 2025

FLEWELLING & MOODY
architects *for* education

HEADQUARTERS OFFICE:
815 Colorado Blvd. Suite 200
Los Angeles, California 90041
323.543.8300 fax 323.543.8198
E-Mail: fm-losangeles@flewelling-moody.com

ANTELOPE VALLEY OFFICE:
1035 West Lancaster Bouldvard
Lancaster, California 93534
661.949.0771 FAX 661.949.2843
E-Mail: fm-lancaster@flewelling-moody.com

An Employee Owned Corporation

ARCHITECT
LICENSED ARCHITECT GREGORY S. [illegible] No. 35802 REN. 07/31/27 STATE OF CALIFORNIA

CONSULTANT
AQUATIC DESIGN GROUP
2226 Faraday Ave. Carlsbad, CA 92008
AquaticDesignGroup.com
760.438.8400

Drawn by:

Check by:

Revisions

No.	Date	Description

All dimensions must be checked at the job by the contractor who accepts full responsibility for their accuracy under the contract. These plans & the specifications in connection therewith have been prepared for a specific site. Any and all responsibility for their use in whole or in part on any other site is hereby disclaimed by Flewelling & Moody.

CITY OF RIDGECREST

SGT. JOHN PINNEY MEMORIAL POOL REPLACEMENT

205 S WARNER ST, RIDGECREST, CA 93555

Drawing Title

COMPETITION POOL DETAILS

Job No. 3055-0100

Date 9/25/2006

Sheet No. **CP-10**

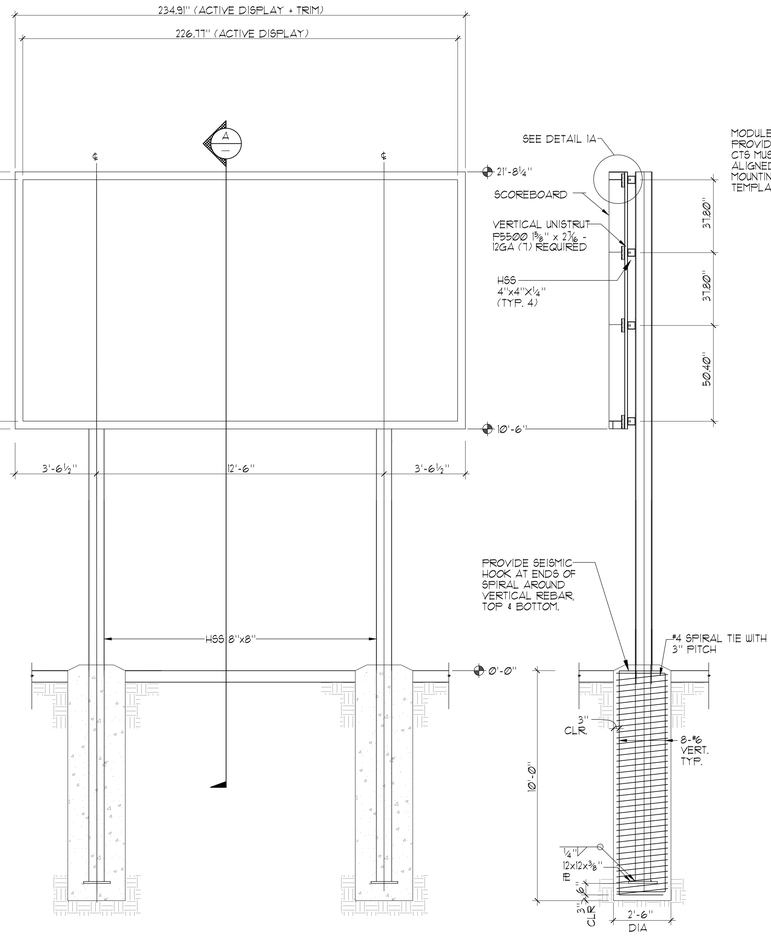

FRONT VIEW

⅜"=1'-Ø"

REAR VIEW

⅜"=1'-Ø"

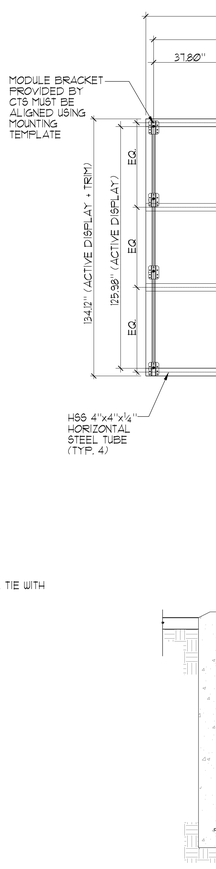

TOP VIEW

NOTES:

1. FOOTING OK FOR SINGLE POUR COLUMN TO BE HELD IN PLACE WITH FORM TEMPLATE.
2. VIBRATE CONCRETE FULL DEPTH.
3. PROVIDE PLYWOOD COLLAR AROUND OPENING.

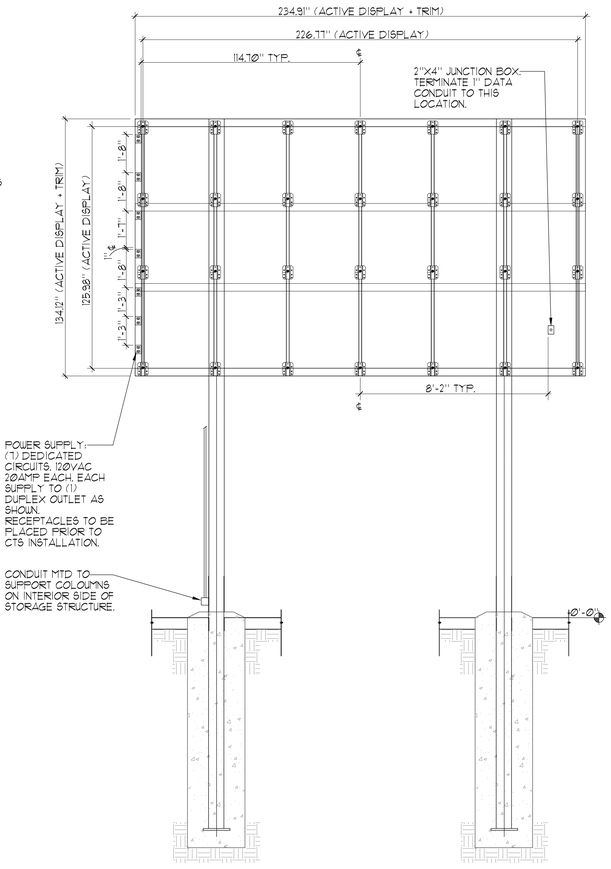

OUTLET LAYOUT

⅜"=1'-Ø"

- EACH 2-PLEX RECEPTACLE SHALL BE 120V MIN. 20 AMP
- RECEPTACLES TO BE PLACED BEFORE CTS INSTALLATION.

- SINGLE GANG WALL BOX WITH BLANK PLATE FOR DATA CABLE. ONE PER DISPLAY.
- EACH CIRCUIT SHALL BE DEDICATED 120V, MIN. 20 AMPS. CALIFORNIA ELECTRIC CODE REQUIRES A MEANS OF DISCONNECTING SIGNS AT THE LOCATION OF THE SIGN. SCOREBOARD SHALL BE WIRED IN ACCORDANCE WITH NATIONAL ELECTRIC CODE ART. 600-6.
- IT IS EXTREMELY IMPORTANT THAT THE CIRCUITS USED TO POWER THE SCOREBOARD NOT BE SHARED WITH OTHER DEVICES. THE SCOREBOARD IS SENSITIVE TO 'NOISE' ON AC POWER LINES.
- DISPLAY SHALL BE EARTH GROUNDED. NUMBER AND LENGTHS OF RODS SHALL MEET CALIFORNIA ELECTRIC CODE.
- DISPLAY MAXIMUM POWER CONSUMPTION: 6,326 WATTS

SPECIFICATIONS:

GENERAL:

- ALL STEEL CONSTRUCTION
- FINISH TO BE BLACK POWDER COAT / ENAMEL PAINT
- DIMENSIONS ARE SUBJECT TO CHANGE DUE TO DETAILED DESIGN CONSIDERATIONS. ONLY APPROVED SHOP DRAWINGS SHALL BE USED FOR CONSTRUCTION.
- DISPLAY MUST BE EARTH GROUNDED. NUMBER AND LENGTHS OF RODS SHALL MEET CALIFORNIA ELECTRIC CODE.
- DESIGN AND CONSTRUCTION OF FRAME MOUNTING STRUCTURE IS TO BE DONE BY OTHERS AND MUST MEET ALL LOCAL AND NATIONAL BUILDING CODES.

SYSTEM WEIGHTS:

- DISPLAY - APPROXIMATELY 2700 LBS.
- FRAME AND EDGE TRIM - APPROXIMATELY 300 LBS.
- DISPLAY MOUNTING CHANNELS SHALL BE ALIGNED USING TEMPLATE.

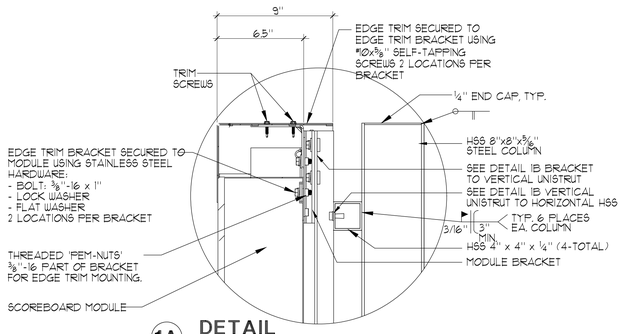

1A DETAIL

NO SCALE

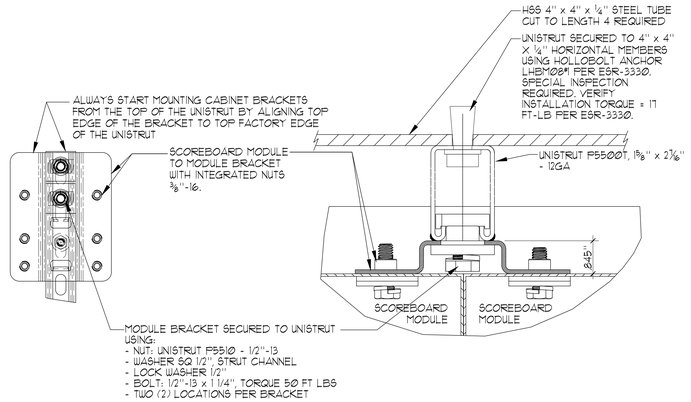

1B DETAIL

NO SCALE

SCOREBOARD DETAILS

AS NOTED

AGENCY

REVIEWED FOR CODE COMPLIANCE BY: WILLDAN ENGINEERING

Approval of these plans & specifications shall not be construed to be a permit for, or an approval of any violation of any Federal, State, County or City laws or ordinances. One set of approved plans must be kept on the job until completion.

9:22:11 AM Jul 21, 2025

FLEWELLING & MOODY
architects *for* education

HEADQUARTERS OFFICE:
815 Colorado Blvd. Suite 200
Los Angeles, California 90041
323.543.8300 fax 323.543.8198
E-Mail: fm-losangeles@flewelling-moody.com

ANTELOPE VALLEY OFFICE:
1035 West Lancaster Bouldvard
Lancaster, California 93534
661.949.0771 FAX 661.949.2843
E-Mail: fm-lancaster@flewelling-moody.com

An Employee Owned Corporation

ARCHITECT

LICENSED ARCHITECT GREGORY S. [illegible] 35802 REN. 07.31.27 STATE OF CALIFORNIA

CONSULTANT

AQUATIC DESIGN GROUP
2226 Faraday Ave. Carlsbad, CA 92008
AquaticDesignGroup.com
760.438.8400

Drawn by:

Check by:

Revisions

No.	Date	Description

All dimensions must be checked at the job by the contractor who accepts full responsibility for their accuracy under the contract. These plans & the specifications in connection therewith have been prepared for a specific site. Any and all responsibility for their use in whole or in part on any other site is hereby disclaimed by Flewelling & Moody.

CITY OF RIDGECREST

SGT. JOHN PINNEY MEMORIAL POOL REPLACEMENT

205 S WARNER ST, RIDGECREST, CA 93555

Drawing Title

COMPETITION POOL DETAILS

Job No. 3055-0100

Date 9/25/2006

Sheet No. CP-11

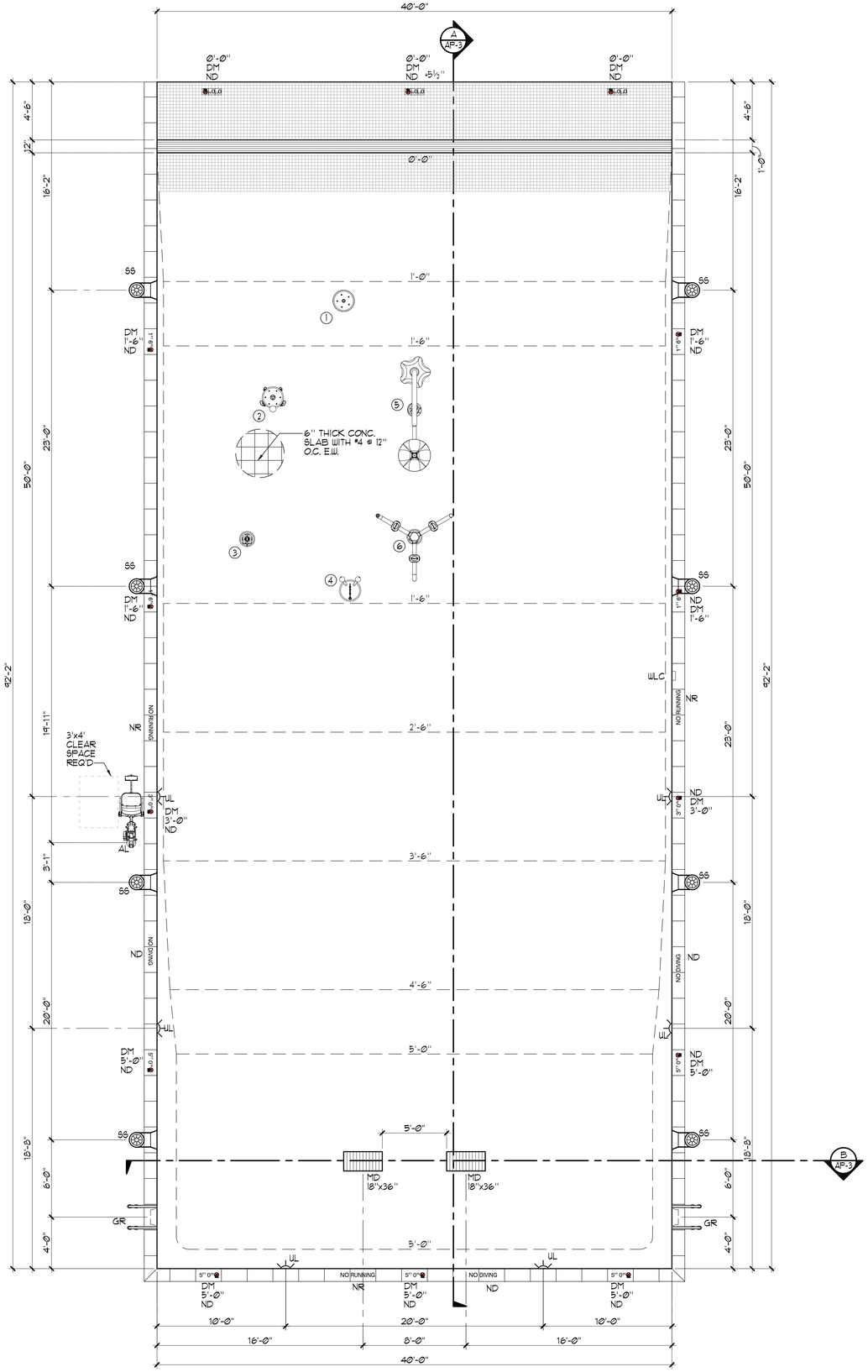

ACTIVITY POOL DATA

SURFACE AREA	=	3,200 SQ FT
PERIMETER	=	240 FT
DEPTHS	=	0'-0" - 5'-0"
VOLUME	=	70,591 GAL
4 HR TURNOVER	=	294 GPM

PRODUCT LEGEND

LINE	PLAY EVENT	QTY	LINE SIZE	GPM	
1	WATERBUG #2 'VORTEX' VOR-7581	1	1½"	12	2 AP-6
2	WATER GARDEN TURTLE #2 'VORTEX' VOR-7212	1	1½"	10	3 AP-6
3	TOT TWISTER 'VORTEX' VOR-7030	1	1½"	15	5 AP-6
4	WATER GARDEN SNAIL #2 'VORTEX' VOR-7206	1	1½"	9	6 AP-6
5	FLOWER #2 'VORTEX' VOR-7550	1	1½"	22	4 AP-6
6	FLUX WATER TRIO 'VORTEX' VOR-7391	1	1½"	30	7 AP-6
				98 TOTAL	

NOTE:

1. EACH POOL SHALL BE PROVIDED WITH A SHEPHERD'S HOOK ATTACHED TO A NON-TELESCOPING POLE, WITH A MIN. LENGTH OF TWELVE (12) FEET, AND MADE WITH A BLUNT END. EACH POOL SHALL BE PROVIDED WITH A USCG APPROVED LIFESAVING RING HAVING AN OUTSIDE DIAMETER OF FIFTEEN TO TWENTY-FOUR INCHES (15"-24"), FIRMLY ATTACHED TO A ONE-QUARTER INCH TO THREE-EIGHTHS INCH (¼"-⅜") DIAMETER THROWING ROPE THAT IS AS LONG AS ONE AND ONE HALF (1½) TIMES THE MAXIMUM WIDTH OF THE POOL, OR FIFTY FEET (50'), WHICHEVER IS LESS. LIFESAVING EQUIPMENT SHALL BE MOUNTED IN A CONSPICUOUS PLACE WITHIN THE POOL ENCLOSURE AND BE READILY AVAILABLE FOR USE IN GOOD CONDITION. POOLS GREATER THAN 50 FEET SHALL HAVE MULTIPLE UNITS WITH AT LEAST ONE SHEPHERD'S HOOK AND LIVE SAVING RING LOCATED ALONG EACH OF THE LONGER SIDE OF THE POOLS.

LEGEND

MD	=	MAIN DRAIN	1 CP-8
DM	=	DEPTH MARKER	4 AP-4
NR	=	'NO RUNNING'	6 AP-4
ND	=	'NO DIVING'	5, 6 AP-4
AL	=	ACCESSIBLE LIFT	2 AP-5
UL	=	UNDERWATER LIGHT	3 CP-9
SS	=	SURFACE SKIMMER	4 AP-5
WLC	=	WATER LEVEL CONTROLLER	8 AP-4
GR	=	GRAB RAIL	1 AP-5

NORTH

1 **ACTIVITY POOL LAYOUT PLAN** ¼"=1'-Ø"

AGENCY

REVIEWED FOR CODE COMPLIANCE BY: WILLDAN ENGINEERING

Approval of these plans & specifications shall not be construed to be a permit for, or an approval of any violation of any Federal, State, County or City laws or ordinances. One set of approved plans must be kept on the job until completion.

9:22:11 AM Jul 21, 2025

FLEWELLING & MOODY
architects *for* education

HEADQUARTERS OFFICE:
815 Colorado Blvd. Suite 200
Los Angeles, California 90041
323.543.8300 fax 323.543.8198
E-Mail: fm-losangeles@flewelling-moody.com

ANTELOPE VALLEY OFFICE:
1035 West Lancaster Bouldvard
Lancaster, California 93534
661.949.0771 FAX 661.949.2843
E-Mail: fm-lancaster@flewelling-moody.com

An Employee Owned Corporation

ARCHITECT

LICENSED ARCHITECT GREGORY S. 35802 REN. 07/31/27 STATE OF CALIFORNIA

CONSULTANT

AQUATIC DESIGN GROUP
2226 Faraday Ave. Carlsbad, CA 92008
AquaticDesignGroup.com
760.438.8400

Drawn by:

Check by:

Revisions

No.	Date	Description

All dimensions must be checked at the job by the contractor who accepts full responsibility for their accuracy under the contract. These plans & the specifications in connection therewith have been prepared for a specific site. Any and all responsibility for their use in whole or in part on any other site is hereby disclaimed by Flewelling & Moody.

CITY OF RIDGECREST

SGT. JOHN PINNEY MEMORIAL POOL REPLACEMENT

205 S WARNER ST, RIDGECREST, CA 93555

Drawing Title

ACTIVITY POOL LAYOUT PLAN

Job No. 3055-0100

Date 9/25/2006

Sheet No. **AP-1**

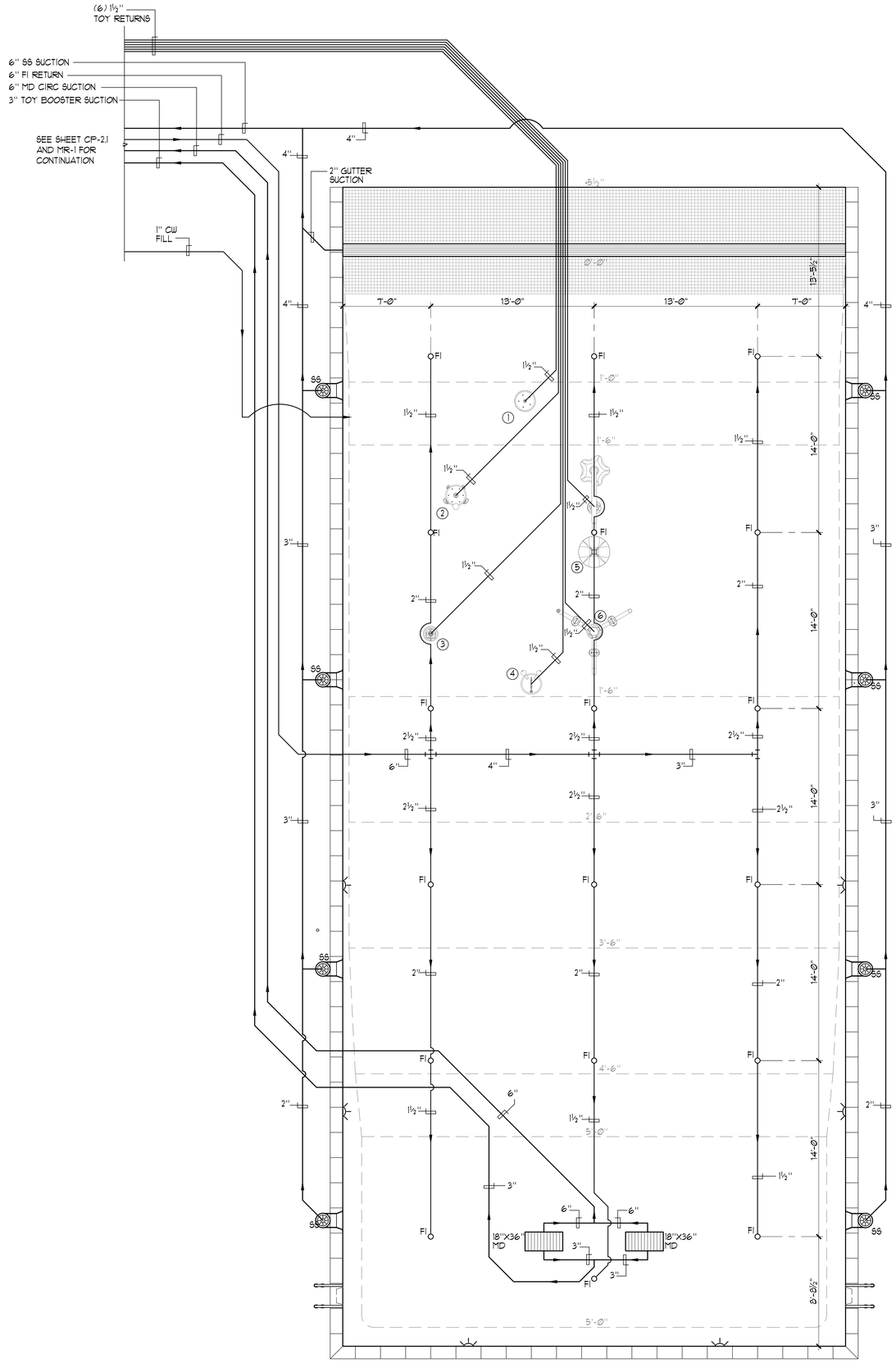

LEGEND

MD	=	MAIN DRAIN — 1 CP-7
SS	=	SURFACE SKIMMER — 4 AP-5
FI	=	FLOOR INLET — 2 CP-7
CW	=	COLD WATER

ACTIVITY POOL DATA

SURFACE AREA	=	3,200 SQ FT
PERIMETER	=	240 FT
DEPTHS	=	0'-Ø" - 5'-Ø"
VOLUME	=	70,591 GAL
4 HR TURNOVER	=	294 GPM

PRODUCT LEGEND

LINE	PLAY EVENT	QTY	LINE SIZE	GPM	
1	WATERBUG #2 'VORTEX' VØR-7581	1	1½"	12	2 AP-6
2	WATER GARDEN TURTLE #2 'VORTEX' VØR-7212	1	1½"	10	3 AP-6
3	TOT TWISTER 'VORTEX' VØR-7030	1	1½"	15	5 AP-6
4	WATER GARDEN SNAIL #2 'VORTEX' VØR-7206	1	1½"	9	6 AP-6
5	FLOWER #2 'VORTEX' VØR-7550	1	1½"	22	4 AP-6
6	FLUX WATER TRIO 'VORTEX' VØR-7391	1	1½"	30	7 AP-6
				98 TOTAL	

NORTH

1 **ACTIVITY POOL PIPING PLAN** ¼"=1'-Ø"

AGENCY

REVIEWED FOR CODE COMPLIANCE BY: WILLDAN ENGINEERING

Approval of these plans & specifications shall not be construed to be a permit for, or an approval of any violation of any Federal, State, County or City laws or ordinances. One set of approved plans must be kept on the job until completion.

9:22:11 AM Jul 21, 2025

FLEWELLING & MOODY
architects *for* education

HEADQUARTERS OFFICE:
815 Colorado Blvd. Suite 200
Los Angeles, California 90041
323.543.8300 fax 323.543.8198
E-Mail: fm-losangeles@flewelling-moody.com

ANTELOPE VALLEY OFFICE:
1035 West Lancaster Bouldvard
Lancaster, California 93534
661.949.0771 FAX 661.949.2843
E-Mail: fm-lancaster@flewelling-moody.com

An Employee Owned Corporation

ARCHITECT

LICENSED ARCHITECT GREGORY S. 35802 REN. 07/31/27 STATE OF CALIFORNIA

CONSULTANT

AQUATIC DESIGN GROUP
2226 Faraday Ave. Carlsbad, CA 92008
AquaticDesignGroup.com
760.438.8400

Drawn by:

Check by:

Revisions

No.	Date	Description

All dimensions must be checked at the job by the contractor who accepts full responsibility for their accuracy under the contract. These plans & the specifications in connection therewith have been prepared for a specific site. Any and all responsibility for their use in whole or in part on any other site is hereby disclaimed by Flewelling & Moody.

CITY OF RIDGECREST

SGT. JOHN PINNEY MEMORIAL POOL REPLACEMENT

205 S WARNER ST, RIDGECREST, CA 93555

Drawing Title

ACTIVITY POOL PIPING PLAN

Job No. 3055-0100

Date 9/25/2006

Sheet No. **AP-2**

LEGEND

MD	=	MAIN DRAIN	1 / CP-8
UL	=	UNDERWATER LIGHT	3 / CP-9
GR	=	GRAB RAIL	1 / AP-5

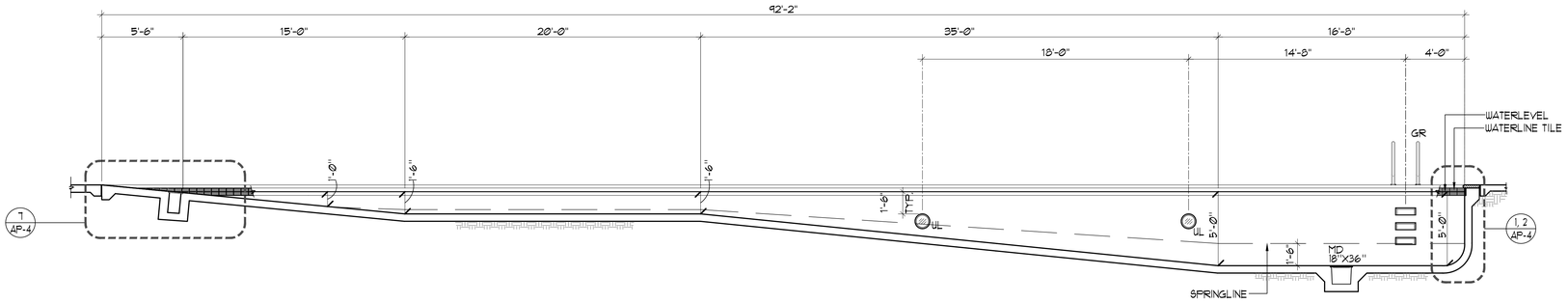

ACTIVITY POOL SECTION

1/4" = 1'-0"

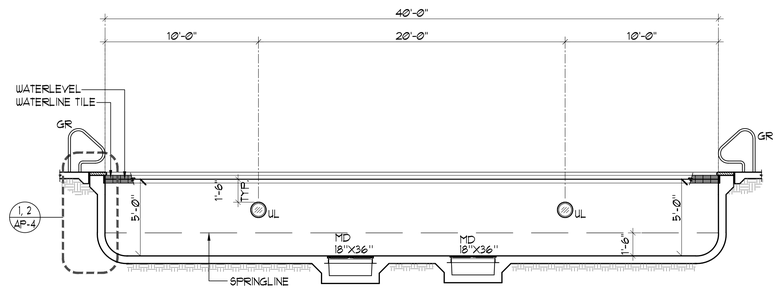

ACTIVITY POOL SECTION

1/4" = 1'-0"

AGENCY

REVIEWED FOR CODE COMPLIANCE BY: WILLDAN ENGINEERING

Approval of these plans & specifications shall not be construed to be a permit for, or an approval of any violation of any Federal, State, County or City laws or ordinances. One set of approved plans must be kept on the job until completion.

9:22:11 AM Jul 21, 2025

FLEWELLING & MOODY
architects *for* education

HEADQUARTERS OFFICE:
815 Colorado Blvd. Suite 200
Los Angeles, California 90041
323.543.8300 fax 323.543.8198
E-Mail: fm-losangeles@flewelling-moody.com

ANTELOPE VALLEY OFFICE:
1035 West Lancaster Bouldvard
Lancaster, California 93534
661.949.0771 FAX 661.949.2843
E-Mail: fm-lancaster@flewelling-moody.com

An Employee Owned Corporation

ARCHITECT

LICENSED ARCHITECT GREGORY S. 35802 REN. 07/31/27 STATE OF CALIFORNIA

CONSULTANT

AQUATIC DESIGN GROUP
2226 Faraday Ave. Carlsbad, CA 92008
AquaticDesignGroup.com
760.438.8400

Drawn by:

Check by:

Revisions

No.	Date	Description

All dimensions must be checked at the job by the contractor who accepts full responsibility for their accuracy under the contract. These plans & the specifications in connection therewith have been prepared for a specific site. Any and all responsibility for their use in whole or in part on any other site is hereby disclaimed by Flewelling & Moody.

CITY OF RIDGECREST

SGT. JOHN PINNEY MEMORIAL POOL REPLACEMENT

205 S WARNER ST, RIDGECREST, CA 93555

Drawing Title

ACITIVITY POOL SECTIONS

Job No.	Sheet No.
3055-0100	AP-3

Date 9/25/2006

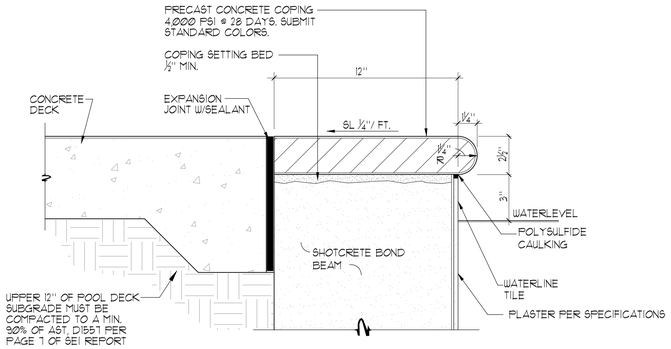

1 **TYPICAL COPING EDGE DETAIL** 3"=1'-0"

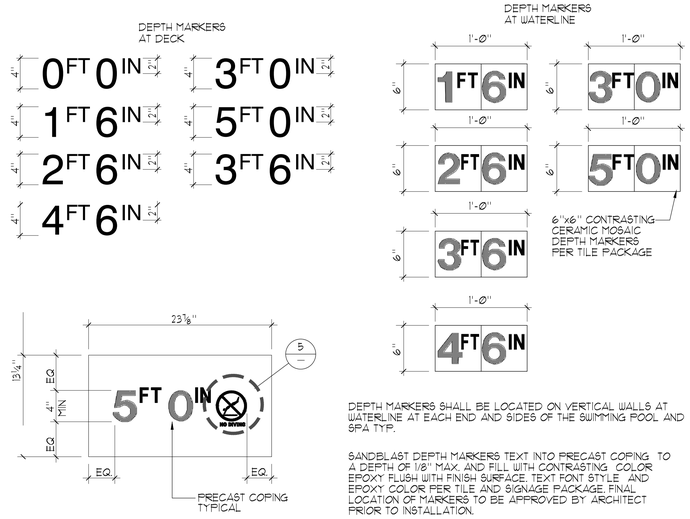

DEPTH MARKERS SHALL BE LOCATED ON VERTICAL WALLS AT WATERLINE AT EACH END AND SIDES OF THE SWIMMING POOL AND SPA TYP.

SANDBLAST DEPTH MARKERS TEXT INTO PRECAST COPING TO A DEPTH OF 1/8" MAX. AND FILL WITH CONTRASTING COLOR EPOXY FLUSH WITH FINISH SURFACE. TEXT FONT STYLE AND EPOXY COLOR PER TILE AND SIGNAGE PACKAGE. FINAL LOCATION OF MARKERS TO BE APPROVED BY ARCHITECT PRIOR TO INSTALLATION.

4 **DEPTH MARKERS** 1½"=1'-0"

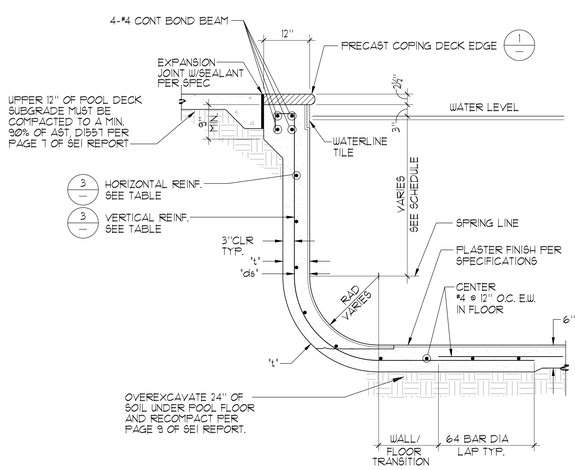

2 **TYPICAL POOL WALL DETAIL** ¾"=1'-0"



NOTE: PLACE IN DECK AT ALL 'NO DIVING' TILE MARKER LOCATIONS AND AT ALL DEPTH MARKERS LESS THAN 6'-0" IN DEPTH.

SANDBLAST MARKERS INTO PRECAST COPING TO A DEPTH OF 1/16" MAX. AND FILL WITH CONTRASTING COLOR EPOXY FLUSH WITH FINISH SURFACE. TEXT FONT STYLE AND EPOXY COLOR TO BE PER CODE CBC 3110B.5; A RED CIRCLE WITH A SLASH THROUGH IT SUPERIMPOSED OVER THE IMAGE OF A DIVER IN COLOR BLACK.

5 **INTERNATIONAL "NO DIVING" MARKERS** AS NOTED

REINFORCEMENT TABLE						
WATER DEPTH	't'	'ds'	RADIUS	VERTICAL REINF.	HORIZONTAL REINF.	WALL/FLOOR TRANSITION
0'-0" TO 3'-6"	6"	3"	0"-6"	#4 @ 12" O.C.	#4 @ 12" O.C.	24"
3'-7" TO 5'-0"	7"	4"	6"-18"	#4 @ 12" O.C.	#4 @ 12" O.C.	24"

CONCRETE NOTES: (FOR POOLS)

1. THE MINIMUM ULTIMATE COMPRESSIVE STRENGTH AT 28 DAYS:
   POOL FLOOR, MATT SLAB, & CAISSONS = 4,000 PSI WITH MAX. WATER/CEMENT RATIO OF 0.50.
2. CONTINUOUS INSPECTION BY AN APPROVED INSPECTOR IS REQUIRED FOR ALL CONCRETE PLACEMENT.
3. ALL CEMENT USED SHALL CONFORM TO A.S.T.M. C-150, TYPE I OR II
4. FINE AND COARSE AGGREGATE SHALL CONFORM TO A.S.T.M. C-33. MAXIMUM SIZE OF AGGREGATE TO BE 1".
5. CONCRETE MIX DESIGNS SHALL BE BASED UPON ACI 318.
6. CONCRETE SHALL BE TESTED AND INSPECTED PER IBC 1705.3 AND ACI 318.
7. REMOVAL OF FORMS SHALL COMPLY WITH ACI 318.
8. ALL REINFORCING SHALL BE ASTM A-615, GRADE 60, UNLESS OTHERWISE NOTED TO BE GRADE 40, MIN. LAPS SHALL BE 64 BAR DIA.

SHOTCRETE NOTES: (FOR POOLS)

1. SHOTCRETE SHALL BE WET-MIX AND HAVE A COMPRESSIVE STRENGTH AT 28 DAYS: POOL FLOOR AND WALLS = 4,000 PSI, WITH MAX. WATER/CEMENT RATIO OF 0.40-0.50. SHOTCRETE MATERIALS, MIXTURE DESIGN, PROPORTIONING, PLACEMENT, CURING AND TESTING SHALL BE PER ACI 318.
2. CONTINUOUS INSPECTION BY AN APPROVED INSPECTOR IS REQUIRED FOR ALL SHOTCRETE PLACEMENT PER ACI 318.
3. ALL CEMENT USED SHALL CONFORM TO A.S.T.M. C-150, TYPE I OR II
4. FINE AND COARSE AGGREGATE SHALL CONFORM TO A.S.T.M. C-33. MAXIMUM SIZE OF AGGREGATE TO BE ⅜".
5. SHOTCRETE SHALL BE TESTED AND INSPECTED PER IBC 1705.3 AND ACI 318.
6. REBAR SHALL BE SECURELY TIED IN PLACE PRIOR TO PLACING OF SHOTCRETE.
7. ALL REINFORCEMENT WITHIN SHOTCRETE SHALL MAINTAIN THE LESSER OF 6 BAR DIA. AND 2½" CLEAR NON-CONTACT SPLICES PER ACI 318.
8. THE FILM OF LAITANCE WHICH FORMS ON THE SURFACE OF THE SHOTCRETE SHALL BE REMOVED WITHIN APPROXIMATELY TWO HOURS, AFTER APPLICATION BY BRUSHING WITH A STIFF BROOM. IF THIS IS NOT REMOVED WITHIN TWO HOURS, IT SHALL BE REMOVED BY THOROUGH WIRE BRUSHING OR SAND BLASTING. CONSTRUCTION JOINTS OVER EIGHT HOURS OLD SHALL BE THOROUGHLY CLEANED WITH AIR AND WATER PRIOR TO RECEIVING SHOTCRETE.
9. ALL REINFORCING SHALL BE ASTM A-615, GRADE 60, UNLESS OTHERWISE NOTED TO BE GRADE 40, MIN. LAPS SHALL BE 64 BAR DIA. REINFORCING SHALL CONFORM TO ACI 318.

3 **REINFORCEMENT TABLE**

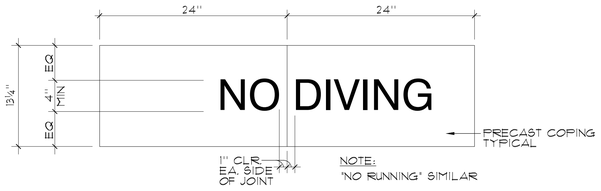

NOTE:
'NO RUNNING' SIMILAR

"NO DIVING" MARKER
1½"=1'-0"



SANDBLAST CAUTION MARKERS TEXT INTO PRECAST COPING TO A DEPTH OF 1/8" MAX. AND FILL WITH CONTRASTING COLOR EPOXY FLUSH WITH FINISH SURFACE. TEXT FONT STYLE AND EPOXY COLOR TO BE APPROVED BY ARCHITECT. PRIOR TO INSTALLATION. FINAL LOCATION OF MARKERS TO BE APPROVED BY ARCHITECT PRIOR TO INSTALLATION.

6 **"NO RUNNING"/"NO DIVING" MARKERS** NO SCALE

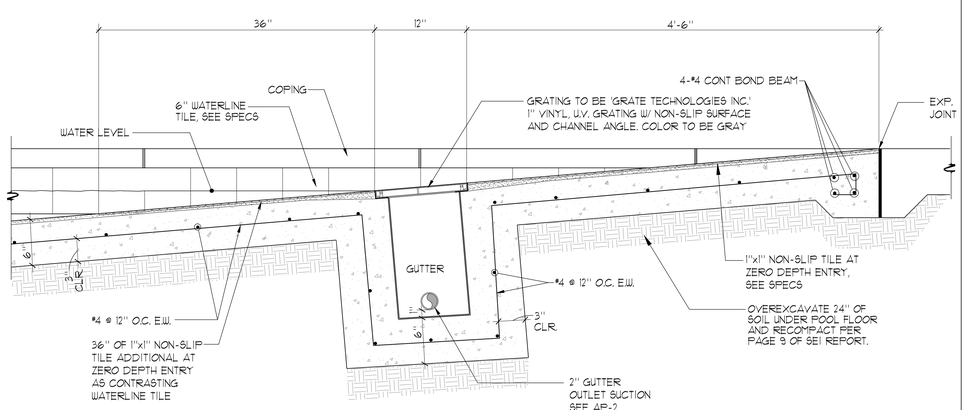

7 **ZERO DEPTH RIM-FLOW GUTTER GRATE** 1½"=1'-0"

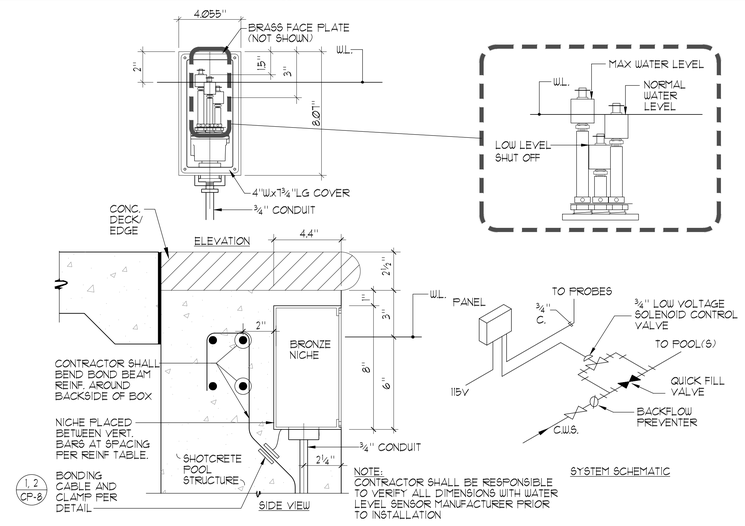

8 **NICHE MOUNTED WATER LEVEL CONTROL** 3"=1'-0"

AGENCY

REVIEWED FOR CODE COMPLIANCE BY:
WILLDAN ENGINEERING

Approval of these plans & specifications shall not be construed to be a permit for, or an approval of any violation of any Federal, State, County or City laws or ordinances. One set of approved plans must be kept on the job until completion.

9:22:11 AM Jul 21, 2025

FLEWELLING & MOODY
architects *for* education

HEADQUARTERS OFFICE:
815 Colorado Blvd. Suite 200
Los Angeles, California 90041
323.543.8300 fax 323.543.8198
E-Mail: fm-losangeles@flewelling-moody.com

ANTELOPE VALLEY OFFICE:
1035 West Lancaster Bouldvard
Lancaster, California 93534
661.949.0771 FAX 661.949.2843
E-Mail: fm-lancaster@flewelling-moody.com

An Employee Owned Corporation

ARCHITECT

LICENSED ARCHITECT
GREGORY S. [illegible]
No. 35802
REN. 07.01.27
STATE OF CALIFORNIA

CONSULTANT

AQUATIC
DESIGN GROUP
2226 Faraday Ave. Carlsbad, CA 92008
AquaticDesignGroup.com
760.438.8400

Drawn by:

Check by:

Revisions

No.	Date	Description

All dimensions must be checked at the job by the contractor who accepts full responsibility for their accuracy under the contract. These plans & the specifications in connection therewith have been prepared for a specific site. Any and all responsibility for their use in whole or in part on any other site is hereby disclaimed by Flewelling & Moody.

CITY OF RIDGECREST

SGT. JOHN PINNEY MEMORIAL
POOL REPLACEMENT

205 S WARNER ST, RIDGECREST, CA 93555

Drawing Title

ACTIVITY POOL
DETAILS

Job No. 3055-0100

Date 9/25/2006

Sheet No. AP-4

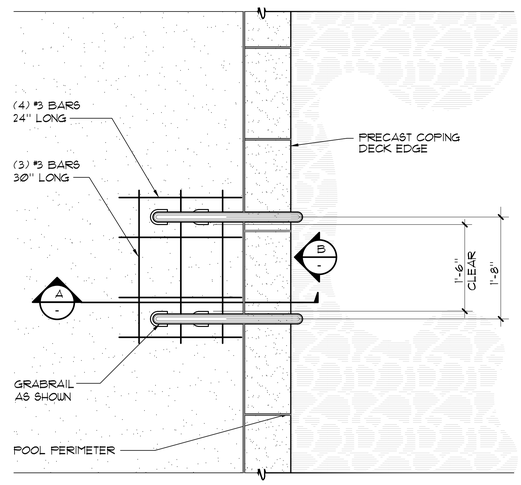

PLAN

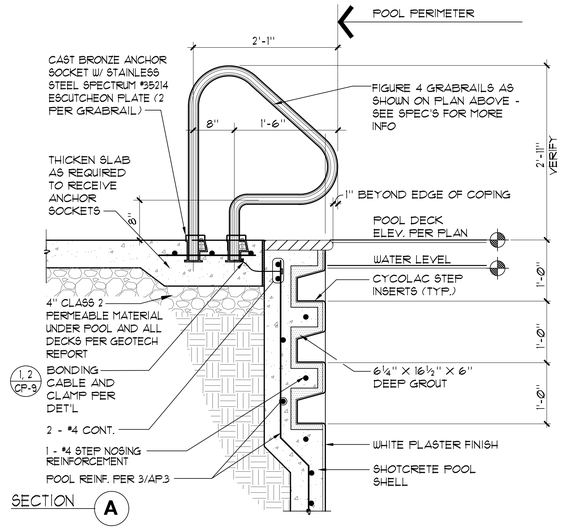

SECTION A

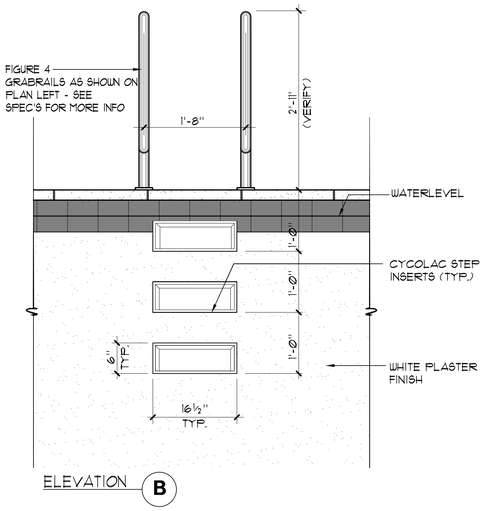

ELEVATION B

1 GRABRAIL WITH STEPS

1"=1'-Ø"

TOP VIEW FOOTING DETAIL

SIDE VIEW

TOP VIEW

NOTES:

1. 'AQUA CREEK' MIGHTY 400 #-MTY400 (350 lb. MIN. AND 400 lb. MAX. LIFTING CAPACITY.)
2. GUSSET COVER PLATE TO BE ATTACHED REQUIRING A TOOL FOR REMOVAL.
3. CONTRACTOR SHALL PROVIDE COVER FOR LIFT 'AQUA CREEK' MIGHTY; EXTRA BATTERY PACK 'AQUA CREEK' #-Ø04AB; TRANSPORTER CART 'AQUA CREEK' #-MTTC; AND 'AQUA CREEK' SCOUT/MIGHTY STANDARD ANCHOR SOCKET #-8085A.
4. REFER TO ARCH. PLANS FOR LOCATION OF DISABLED LIFT BATTERY CHARGE STATION. PROVIDE 'AQUA CREEK' CHARGER # F-Ø44CH.
5. POOL LIFT SHALL BE LOCATED WHERE THE WATER LEVEL IS AT LEAST 36" AND DOES NOT EXCEED 48" DEEP, UNLESS ENTIRE POOL IS GREATER THAT 48" DEEP. (CBC SECTION 11B-1009.2.)
6. ON THE RAISED POSITION, THE CENTERLINE OF THE SEAT SHALL BE LOCATED OVER THE DECK AND 16" MINIMUM FROM THE EDGE OF THE POOL. THE DECK SURFACE BETWEEN THE CENTERLINE OF THE SEAT AND THE POOL EDGE SHALL HAVE A 2% MAX. SLOPE. (CBC SECTION 11B-1009.2.2)
7. CLEAR DECK SPACE SHALL BE PROVIDED ON SIDE OF SEAT OPPOSITE THE WATER PARALLEL TO THE WATER 36" WIDE x 48" MINIMUM FROM A LINE LOCATED 12" BEHIND THE REAR EDGE OF THE SEAT. THE CLEAR SPACE SHALL HAVE A 2% MAX. SLOPE. (CBC SECTION 11B-1009.2.3.)
8. THE HEIGHT OF THE LIFT SEAT SHALL BE DESIGNED TO ALLOW A STOP AT 17" MIN. TO 19" MAX. MEASURED FROM THE DECK TO THE TOP OF THE SEAT SURFACE WHEN IN THE RAISED POSITION. (CBC SECTION 11B-1009.2.4)
9. THE SEAT SHALL BE RIGID AND 17" MIN. TO 19" MAX. WIDE. THE LIFT SEAT SHALL HAVE A BACK SUPPORT 12" MIN. TALL. (CBC SECTION 11B-1009.2.4)
10. FOOTRESTS SHALL BE PROVIDED, EXCEPT FOR SPA LIFTS, AND SHALL MOVE WITH THE SEAT. LIFT SHALL HAVE TWO ARMRESTS. THE ARMREST POSITIONED OPPOSITE THE WATER SHALL BE REMOVABLE OR SHALL FOLD CLEAR OF THE SEAT WHEN THE SEAT IS IN THE RAISED POSITION. (CBC SECTION 11B-1009.2.6)
11. THE LIFT SHALL BE CAPABLE OF UNASSISTED OPERATION FROM BOTH THE DECK AND WATER LEVELS. CONTROLS AND OPERATING MECHANISMS SHALL BE OPERABLE WITH ONE HAND AND SHALL BE UNOBSTRUCTED WHEN THE LIFT IS IN USE (CBC SECTION 11B-309.4.) LIFT MUST BE STABLE AND NOT PERMIT UNINTENDED MOVEMENT WHEN A PERSON IS GETTING INTO OR OUT OF THE SEAT. (CBC SECTION 11B-1009.2.1.)
12. THE LIFT SHALL BE DESIGNED SO THAT THE SEAT WILL SUBMERGE TO A WATER DEPTH OF 18" MIN. BELOW THE STATIONARY WATER LEVEL. (CBC SECTION 11B-1009.2.8.)
13. LIFT SEAT MUST HAVE AN OCCUPANT RESTRAINT FOR USE BY THE OCCUPANT OF THE SEAT AND THE RESTRAINT MUST MEET THE STANDARDS FOR OPERABLE CONTROLS IN COMPLIANCE WITH CBC SECTION 11B-1009.2.4 AND SECTION 11B-309.

2 ACCESSIBLE LIFT

¾"=1'-Ø"

3 INSTRUCTIONAL POOL HANDRAIL DETAIL

1"=1'-Ø"

4 SURFACE SKIMMER

1"=1'-Ø"

AGENCY

REVIEWED FOR CODE COMPLIANCE BY: WILLDAN ENGINEERING

Approval of these plans & specifications shall not be construed to be a permit for, or an approval of any violation of any Federal, State, County or City laws or ordinances. One set of approved plans must be kept on the job until completion.

9:22:11 AM Jul 21, 2025

FLEWELLING & MOODY
architects *for* education

HEADQUARTERS OFFICE:
815 Colorado Blvd. Suite 200
Los Angeles, California 90041
323.543.8300 fax 323.543.8198
E-Mail: fm-losangeles@flewelling-moody.com

ANTELOPE VALLEY OFFICE:
1035 West Lancaster Bouldvard
Lancaster, California 93534
661.949.0771 FAX 661.949.2843
E-Mail: fm-lancaster@flewelling-moody.com

An Employee Owned Corporation

ARCHITECT

LICENSED ARCHITECT GREGORY S. [illegible] No. C-35802 REN. 07.01.07 STATE OF CALIFORNIA

CONSULTANT

AQUATIC DESIGN GROUP
2226 Faraday Ave. Carlsbad, CA 92008
AquaticDesignGroup.com
760.438.8400

Drawn by:

Check by:

Revisions

No.	Date	Description

All dimensions must be checked at the job by the contractor who accepts full responsibility for their accuracy under the contract. These plans & the specifications in connection therewith have been prepared for a specific site. Any and all responsibility for their use in whole or in part on any other site is hereby disclaimed by Flewelling & Moody.

CITY OF RIDGECREST

SGT. JOHN PINNEY MEMORIAL POOL REPLACEMENT

205 S WARNER ST, RIDGECREST, CA 93555

Drawing Title

ACTIVITY POOL DETAILS

Job No. 3055-0100

Sheet No. AP-5

Date 9/25/2006

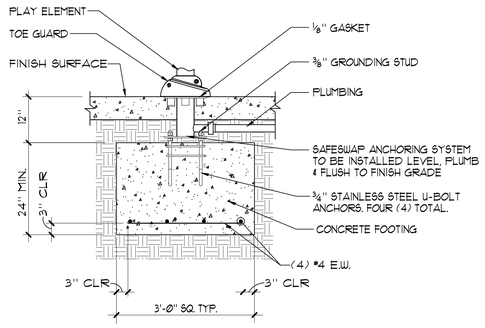

SAFESWAP ANCHOR DETAIL

1 SAFESWAP ANCHOR NO SCALE

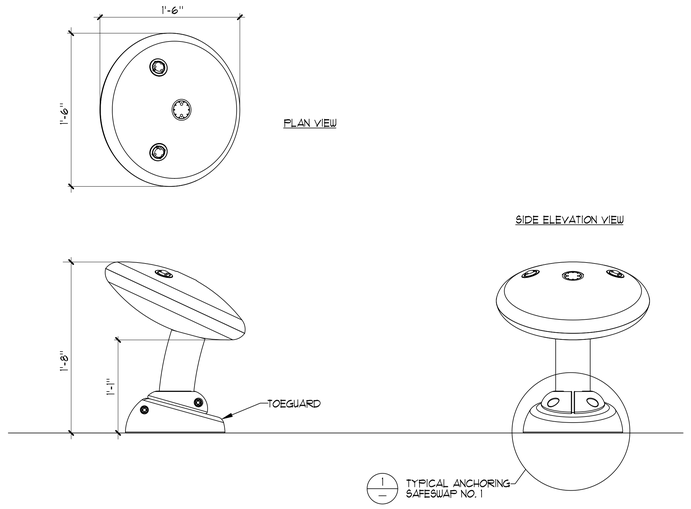

2 WATERBUG NO. 2 1½"=1'-Ø"

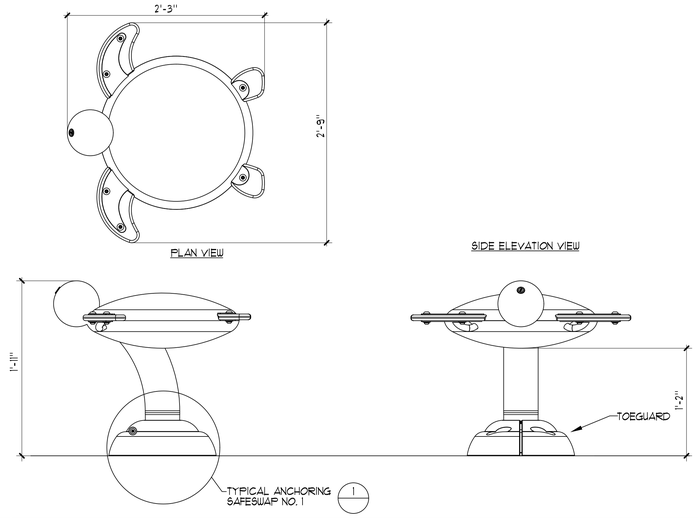

3 TURTLE NO. 2 1½"=1'-Ø"



PLAN VIEW

ELEVATION VIEW

4 FLOWER NO. 2 DETAIL NO SCALE

PLAN VIEW

5 TOT TWISTER NO SCALE

6 WATER GARDEN SNAIL NO. 2 NO SCALE

7 PLUX WATER TRIO NO SCALE

8

9

AGENCY

REVIEWED FOR CODE COMPLIANCE BY: WILLDAN ENGINEERING

Approval of these plans & specifications shall not be construed to be a permit for, or an approval of any violation of any Federal, State, County or City laws or ordinances. One set of approved plans must be kept on the job until completion.

9:22:11 AM Jul 21, 2025

FLEWELLING & MOODY
architects *for* education

HEADQUARTERS OFFICE:
815 Colorado Blvd. Suite 200
Los Angeles, California 90041
323.543.8300 fax 323.543.8198
E-Mail: fm-losangeles@flewelling-moody.com

ANTELOPE VALLEY OFFICE:
1035 West Lancaster Bouldvard
Lancaster, California 93534
661.949.0771 FAX 661.949.2843
E-Mail: fm-lancaster@flewelling-moody.com

An Employee Owned Corporation

ARCHITECT

LICENSED ARCHITECT GREGORY S. [illegible] 35802 REN. 07.01.27 STATE OF CALIFORNIA

CONSULTANT

AQUATIC DESIGN GROUP
2226 Faraday Ave. Carlsbad, CA 92008
AquaticDesignGroup.com
760.438.8400

Drawn by:

Check by:

Revisions

No.	Date	Description

All dimensions must be checked at the job by the contractor who accepts full responsibility for their accuracy under the contract. These plans & the specifications in connection therewith have been prepared for a specific site. Any and all responsibility for their use in whole or in part on any other site is hereby disclaimed by Flewelling & Moody.

CITY OF RIDGECREST

SGT. JOHN PINNEY MEMORIAL POOL REPLACEMENT

205 S WARNER ST, RIDGECREST, CA 93555

Drawing Title

ACTIVITY POOL DETAILS

Job No. 3055-0100

Date 9/25/2006

Sheet No. **AP-6**

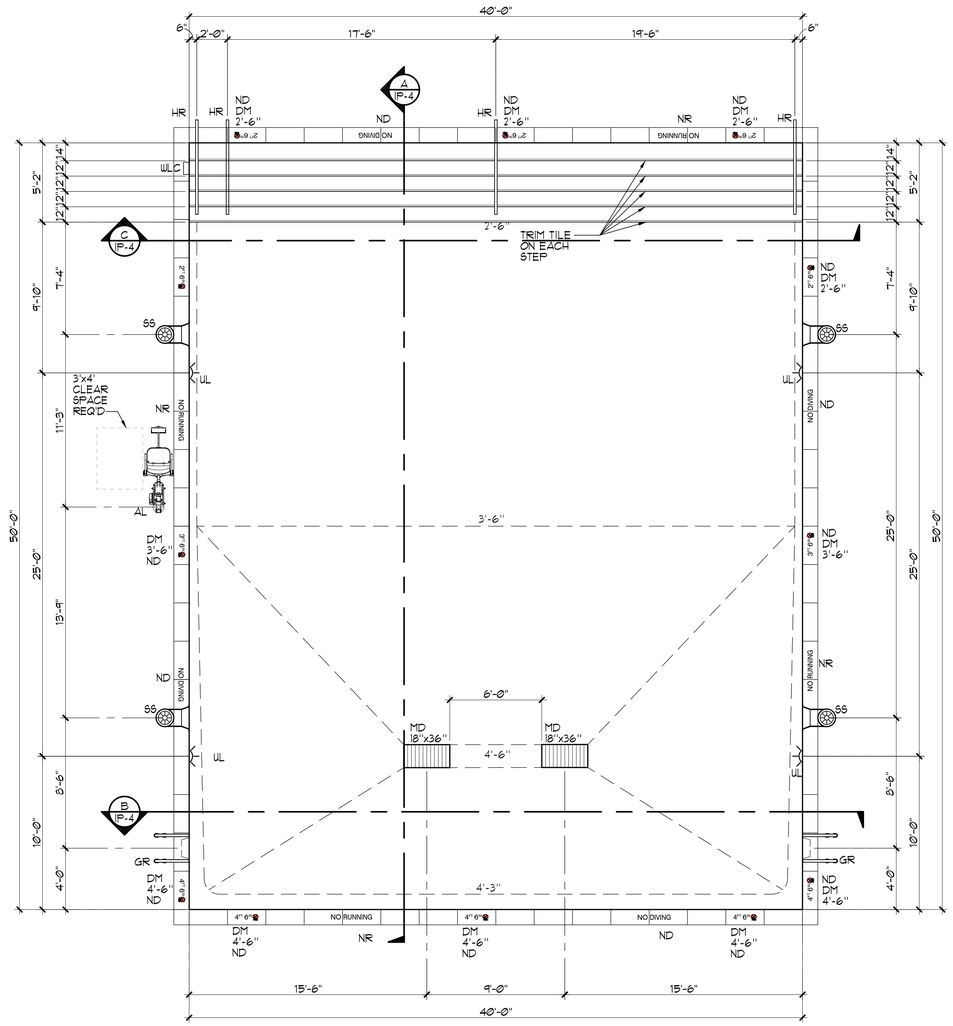

INSTRUCTIONAL POOL DATA

SURFACE AREA	=	2,000 SQ. FT.
PERIMETER	=	180 FT.
DEPTH	=	2'-6" TO 4'-6"
VOLUME	=	49,308 GAL.
4 HR TURNOVER	=	208 GPM

LEGEND

MD	=	MAIN DRAIN	1 / CP-8
DM	=	DEPTH MARKER	4 / AP-4
NR	=	'NO RUNNING'	6 / AP-4
ND	=	'NO DIVING'	5, 6 / AP-4
HR	=	HANDRAIL	3 / AP-5
UL	=	UNDERWATER LIGHT	3 / CP-9
SS	=	SURFACE SKIMMER	4 / AP-5
WLC	=	WATER LEVEL CONTROLLER	8 / AP-4
GR	=	GRAB RAIL	1 / AP-5
AL	=	ACCESSIBLE LIFT	2 / AP-5

NOTE:

1. EACH POOL SHALL BE PROVIDED WITH A SHEPHERD'S HOOK ATTACHED TO A NON-TELESCOPING POLE, WITH A MIN. LENGTH OF TWELVE (12) FEET, AND MADE WITH A BLUNT END. EACH POOL SHALL BE PROVIDED WITH A USCG APPROVED LIFESAVING RING HAVING AN OUTSIDE DIAMETER OF FIFTEEN TO TWENTY-FOUR INCHES (15"-24"), FIRMLY ATTACHED TO A ONE-QUARTER INCH TO THREE-EIGHTHS INCH (¼"-⅜") DIAMETER THROWING ROPE THAT IS AS LONG AS ONE AND ONE HALF (1½) TIMES THE MAXIMUM WIDTH OF THE POOL, OR FIFTY FEET (50'), WHICHEVER IS LESS. LIFESAVING EQUIPMENT SHALL BE MOUNTED IN A CONSPICUOUS PLACE WITHIN THE POOL ENCLOSURE AND BE READILY AVAILABLE FOR USE IN GOOD CONDITION. POOLS GREATER THAN 50 FEET SHALL HAVE MULTIPLE UNITS WITH AT LEAST ONE SHEPHERD'S HOOK AND LIVE SAVING RING LOCATED ALONG EACH OF THE LONGER SIDE OF THE POOLS.

NORTH

1 **INSTRUCTIONAL POOL LAYOUT PLAN** ¼"=1'-0"

AGENCY

REVIEWED FOR CODE COMPLIANCE BY: WILLDAN ENGINEERING

Approval of these plans & specifications shall not be construed to be a permit for, or an approval of any violation of any Federal, State, County or City laws or ordinances. One set of approved plans must be kept on the job until completion.

9:22:11 AM Jul 21, 2025

FLEWELLING & MOODY
architects *for* education

HEADQUARTERS OFFICE:
815 Colorado Blvd. Suite 200
Los Angeles, California 90041
323.543.8300 fax 323.543.8198
E-Mail: fm-losangeles@flewelling-moody.com

ANTELOPE VALLEY OFFICE:
1035 West Lancaster Bouldvard
Lancaster, California 93534
661.949.0771 FAX 661.949.2843
E-Mail: fm-lancaster@flewelling-moody.com

An Employee Owned Corporation

ARCHITECT

LICENSED ARCHITECT GREGORY S. MOODY No. 35802 REN. 07/31/27 STATE OF CALIFORNIA

CONSULTANT

AQUATIC DESIGN GROUP
2226 Faraday Ave. Carlsbad, CA 92008
AquaticDesignGroup.com
760.438.8400

Drawn by:

Check by:

Revisions

No.	Date	Description

All dimensions must be checked at the job by the contractor who accepts full responsibility for their accuracy under the contract. These plans & the specifications in connection therewith have been prepared for a specific site. Any and all responsibility for their use in whole or in part on any other site is hereby disclaimed by Flewelling & Moody.

CITY OF RIDGECREST

SGT. JOHN PINNEY MEMORIAL POOL REPLACEMENT

205 S WARNER ST, RIDGECREST, CA 93555

Drawing Title

INSTRUCTIONAL POOL LAYOUT PLAN

Job No. 3055-0100

Date 9/25/2006

Sheet No. **IP-1**

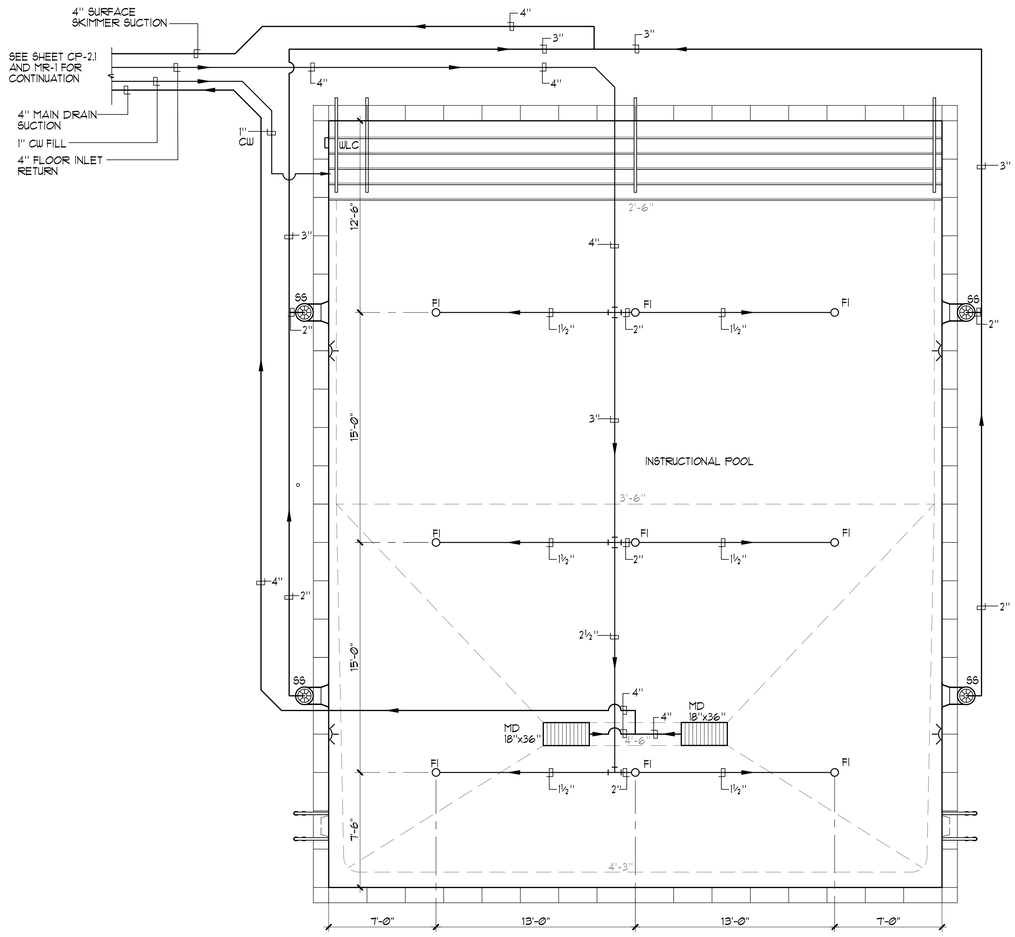

INSTRUCTIONAL POOL DATA

SURFACE AREA	=	2,000 SQ. FT.
PERIMETER	=	180 FT.
DEPTH	=	2'-6" TO 4'-6"
VOLUME	=	49,308 GAL.
4 HR TURNOVER	=	206 GPM

LEGEND

MD	=	MAIN DRAIN	1 / CP-8
WLC	=	WATER LEVEL CONTROLLER	8 / AP-4
SS	=	SURFACE SKIMMER	4 / AP-5
FI	=	FLOOR INLET	2 / CP-8

NORTH

1 INSTRUCTIONAL POOL PIPING PLAN

¼" = 1'-Ø"

AGENCY

REVIEWED FOR CODE COMPLIANCE BY: WILLDAN ENGINEERING

Approval of these plans & specifications shall not be construed to be a permit for, or an approval of any violation of any Federal, State, County or City laws or ordinances. One set of approved plans must be kept on the job until completion.

9:22:11 AM Jul 21, 2025

FLEWELLING & MOODY
architects *for* education

HEADQUARTERS OFFICE:
815 Colorado Blvd. Suite 200
Los Angeles, California 90041
323.543.8300 fax 323.543.8198
E-Mail: fm-losangeles@flewelling-moody.com

ANTELOPE VALLEY OFFICE:
1035 West Lancaster Bouldvard
Lancaster, California 93534
661.949.0771 FAX 661.949.2843
E-Mail: fm-lancaster@flewelling-moody.com

An Employee Owned Corporation

ARCHITECT

LICENSED ARCHITECT GREGORY S. 35802 REN. 07/31/27 STATE OF CALIFORNIA

CONSULTANT

AQUATIC DESIGN GROUP
2226 Faraday Ave. Carlsbad, CA 92008
AquaticDesignGroup.com
760.438.8400

Drawn by:

Check by:

Revisions

No.	Date	Description

All dimensions must be checked at the job by the contractor who accepts full responsibility for their accuracy under the contract. These plans & the specifications in connection therewith have been prepared for a specific site. Any and all responsibility for their use in whole or in part on any other site is hereby disclaimed by Flewelling & Moody.

CITY OF RIDGECREST

SGT. JOHN PINNEY MEMORIAL POOL REPLACEMENT

205 S WARNER ST, RIDGECREST, CA 93555

Drawing Title

INSTRUCTIONAL POOL PIPING PLAN

Job No. 3055-0100

Date 9/25/2006

Sheet No. **IP-2**

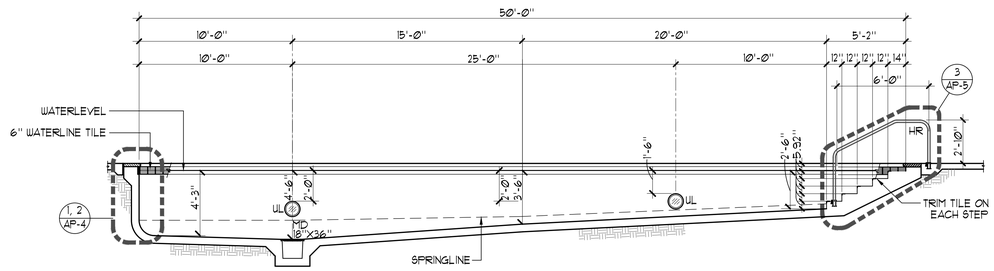

A INSTRUCTIONAL POOL SECTION

1/4"=1'-0"

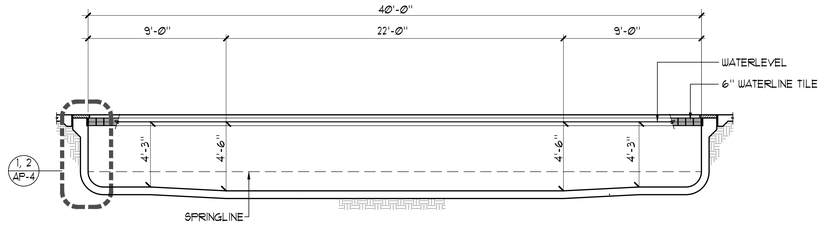

B INSTRUCTIONAL POOL SECTION

1/4"=1'-0"

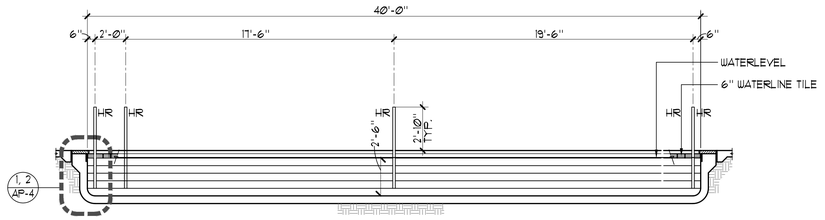

C INSTRUCTIONAL POOL SECTION

1/4"=1'-0"

AGENCY

REVIEWED FOR CODE COMPLIANCE BY: WILLDAN ENGINEERING

Approval of these plans & specifications shall not be construed to be a permit for, or an approval of any violation of any Federal, State, County or City laws or ordinances. One set of approved plans must be kept on the job until completion.

9:22:11 AM Jul 21, 2025

FLEWELLING & MOODY
architects *for* education

HEADQUARTERS OFFICE:
815 Colorado Blvd. Suite 200
Los Angeles, California 90041
323.543.8300 fax 323.543.8198
E-Mail: fm-losangeles@flewelling-moody.com

ANTELOPE VALLEY OFFICE:
1035 West Lancaster Bouldvard
Lancaster, California 93534
661.949.0771 FAX 661.949.2643
E-Mail: fm-lancaster@flewelling-moody.com

An Employee Owned Corporation

ARCHITECT

LICENSED ARCHITECT GREGORY S. [illegible] 35802 REN. 07/31/27 STATE OF CALIFORNIA

CONSULTANT

AQUATIC DESIGN GROUP
2226 Faraday Ave. Carlsbad, CA 92008
AquaticDesignGroup.com
760.438.8400

Drawn by:

Check by:

Revisions

No.	Date	Description

All dimensions must be checked at the job by the contractor who accepts full responsibility for their accuracy under the contract. These plans & the specifications in connection therewith have been prepared for a specific site. Any and all responsibility for their use in whole or in part on any other site is hereby disclaimed by Flewelling & Moody.

CITY OF RIDGECREST

SGT. JOHN PINNEY MEMORIAL POOL REPLACEMENT

205 S WARNER ST, RIDGECREST, CA 93555

Drawing Title

INSTRUCTIONAL POOL SECTIONS

Job No. 3055-0100

Date 9/25/2006

Sheet No. **IP-3**

GENERAL NOTES

(A) THE DIRECTION OF FLOW FOR THE RECIRCULATION EQUIPMENT AND BOOSTER PUMP EQUIPMENT SHALL BE LABELED CLEARLY WITH DIRECTIONAL SYMBOLS SUCH AS ARROWS ON ALL PIPING IN THE EQUIPMENT AREA.

(B) VALVES AND PLUMBING LINES SHALL BE LABELED CLEARLY WITH THE SOURCE OR DESTINATION DESCRIPTIONS.

(C) PREFABRICATED BUILDING AND PENETRATIONS FOR EQUIPMENT LOCATION SHALL BE FINALIZED WITH BUILDING MANUFACTURER. EQUIPMENT LOCATION WITHIN ROOM ARE SHOWN FOR OVERALL SCHEMATIC AND SYSTEM FLOW PURPOSES. FINAL LOCATIONS OF EQUIPMENT MAY BE SUBJECT TO ADJUSTMENT FOR STRUCTURAL INTEGRITY OF PREFABRICATED BUILDING.

(D) CONTRACTOR SHALL SEISMICALLY ANCHOR PIPES WITH PIPE STANDS OR UNISTRUT BRACING TO BUILDING WALL OR ANY MEANS NECESSARY TO PROPERLY SUPPORT PIPE SYSTEM. DISTANCES SHALL NOT EXCEED 6FT ON SUPPORT.

(E) FLOOR SHALL SLOPE TO 2% FLOOR DRAINS

(F) PUBLIC POOLS SHALL HAVE A FLOW DIAGRAM OF THE POOL'S PIPING SYSTEM WITH OPERATION INSTRUCTIONS.

(G) ALL PLUMBING BELOW GRADE SHALL BE SCH 40 PVC AND ALL PLUMBING ABOVE GRADE SHALL BE SCH. 80 PVC PIPE, UNLESS NOTED OTHERWISE.

(H) MECHANICAL ROOM AND PLUMBING IS SCHEMATIC IN NATURE. POOL CONTRACTOR TO COORDINATE MECHANICAL EQUIPMENT PLACEMENT, UTILITIES, EQUIPMENT PADS, DISCONNECTS, EQUIPMENT INTERCONNECTIONS, PLUMBING SUPPORTS AND ALL NECESSARY APPURTENANCES FOR A FULLY FUNCTIONAL, CODE COMPLIANT SYSTEM

(I) ALL PIPING SHALL BE LABELED WITH DIRECTIONAL FLOW ARROWS AND ALL COLOR CODED NAMING AND FONT SIZING STANDARDS IN COMPLIANCE WITH ANSI/ASME A13.1 STANDARDS

LEGEND

FM	=	FLOWMETER (6 / MR-7)
PH	=	PIPE HANGER (5 / MR-5)
PG/VG	=	PRESSURE/VACUUM GAUGE (9 / MR-3)
BV	=	BALL VALVE
BFV	=	BUTTERFLY VALVE
CV	=	CHECK VALVE
BW	=	BACKWASH
AI	=	ACID INJECTION
CI	=	CHLORINE INJECTION
HB	=	HOSE BIBB
A.F.F.	=	ABOVE FINISH FLOOR
FD	=	FLOOR DRAIN
FS	=	FLOOR SINK
CP	=	COMPETITION POOL
AP	=	ACTIVITY POOL
IP	=	INSTRUCTIONAL POOL

THREE PHASE MOTOR LOADS AT 208V

COMPETITION POOL CIRCULATION PUMP:	20 HP @ 208V.	= 59.4 AMPS
ACTIVITY POOL CIRCULATION PUMP:	7.5 HP @ 208V.	= 24.2 AMPS
INSTRUCTIONAL POOL CIRCULATION PUMP:	5 HP @ 208V.	= 16.1 AMPS
ACTIVITY POOL BOOSTER PUMP:	7.5 HP @ 208V.	= 24.2 AMPS
	TOTAL =	124.5 AMPS

HEATER/GAS PIPING INSTALLATION NOTE

GAS FIRED POOL HEATER(S) INSTALLED ON A GAS SUPPLY SYSTEM UTILIZING A 2 PSI OR 5 PSI SUPPLY. GAS PRESSURE SHALL REQUIRE A REGULATOR TO REDUCE THE SUPPLY PRESSURE. A PROPERLY SIZED AND INSTALLED LOCK-UP-TYPE HIGH GAS PRESSURE REGULATOR (HGPR) SHALL BE USED TO REDUCE THE GAS PRESSURE AT THE UNIT INLET TO A MINIMUM OF 4" TO A MAXIMUM OF 11" WATER COLUMN.

'LOCHINVAR' RECOMMENDS THAT ANY REQUIRED LINE LOCK-UP-TYPE HIGH GAS PRESSURE REGULATOR BE INSTALLED WITH A MINIMUM OF 8 FEET TO 10 FEET OF PIPE FROM ITS DISCHARGE TO THE UNIT'S GAS INLET. IF A STRAIGHT DISTANCE OF GAS PIPE IS NOT AVAILABLE THE ADDITION OF A VERTICAL 'U' IN THE GAS PIPING DOWN STREAM FROM THE 'HGPR' CAN BE USED TO ACHIEVE THE 8 FEET TO 10 FEET OF DISTANCE.

CONTRACTOR IS RESPONSIBLE FOR HEATER VENTING, EXHAUST DUCTING, FLUE TERMINUS AND PENETRATION(S) THROUGH BUILDING STRUCTURE.

WEDGE OR EXPANSION ANCHOR EMBEDMENT DEPTH AND TEST LOAD

SIZE	HILTI KB TZ 2 (SS) ANCHORS IN CONCRETE (ESR-4266)		KB TZ 2 (SS) ANCHORS IN CMU (ESR-4561)	
	MIN. EMBED (heff)	TORQUE LOAD (FT-LBS)	MIN. EMBED (heff)	TORQUE LOAD (FT-LBS)
¼" DIA.	1½"	6	1½"	6
⅜" DIA.	2½"	30	2½"	15
½" DIA.	3¼"	40	3¼"	25
⅝" DIA.	4"	60	4"	35
¾" DIA.	4¾"	125	4¾"	50

MECHANICAL ANCHORAGE

1. EXPANSION OR WEDGE ANCHORS INTO CONCRETE: HILTI KB TZ 2 (ICC ESR-4266) TO BE INSTALLED IN ACCORDANCE WITH ICC REPORT AND MANUFACTURER'S RECOMMENDATIONS.
2. EXPANSION OR WEDGE ANCHORS INTO MASONRY: HILTI KB TZ 2 (ICC ESR-4561) TO BE INSTALLED IN ACCORDANCE WITH ICC REPORT AND MANUFACTURER'S RECOMMENDATIONS.
3. FASTENERS SHALL BE STAINLESS STEEL FOR EXTERIOR USE OR WHEN EXPOSED TO WEATHER. PROVIDE GALVANIZED CARBON STEEL ANCHORS AT OTHER LOCATIONS, UNLESS OTHERWISE NOTED.
4. IF REINFORCEMENT IS ENCOUNTERED DURING DRILLING, ABANDON AND SHIFT THE HOLE LOCATION TO AVOID THE REINFORCEMENT. PROVIDE A MINIMUM OF 2 ANCHOR DIAMETERS OR 1 INCH, WHICHEVER IS LARGER, OF SOUND CONCRETE BETWEEN THE DOWEL AND THE ABANDONED HOLE. FILL THE ABANDONED HOLE WITH NON-SHRINK GROUT WITH CONCRETE STRENGTH EQUAL TO OR GREATER THAN BASE MATERIAL. IF THE ANCHOR OR DOWEL MAY NOT BE SHIFTED AS NOTED ABOVE, THE STRUCTURAL ENGINEER WILL DETERMINE A NEW LOCATION.
5. LOCATE REINFORCEMENT AND CONFIRM FINAL ANCHOR LOCATIONS PRIOR TO FABRICATING PLATES, MEMBERS, OR OTHER STEEL ASSEMBLIES ATTACHED WITH MECHANICAL ANCHORS.
6. ANCHORS SHALL BE PROOF-TESTED BY OWNER'S TESTING AND INSPECTION AGENCY.
7. TEST ANCHORS NO SOONER THAN 24 HOURS AFTER INSTALLATION.
8. APPLY TEST LOAD BY ANY METHOD THAT WILL EFFECTIVELY MEASURE THE TENSION OF THE ANCHOR SUCH AS DIRECT PULL WITH A HYDRAULIC JACK, TORQUE WRENCH, OR CALIBRATED SPRING LOADING DEVICES, ETC.
9. REACTION LOADS FROM TEST FIXTURES MAY BE APPLIED CLOSE TO THE ANCHOR BEING TESTED, PROVIDED THE ANCHOR IS NOT RESTRAINED FROM WITHDRAWING BY A BASE PLATE OR OTHER FIXTURE. IF RESTRAINT IS FOUND, LOOSEN AND SHIM OR REMOVE THE FIXTURE PRIOR TO TESTING.
10. UNLESS OTHERWISE NOTED, PROVIDE MINIMUM EMBEDMENT OF ANCHORS AS SHOWN IN TABLES BELOW.
11. TEST 50% OF ANCHORS PER ONE OF THE FOLLOWING METHODS AND IN ACCORDANCE WITH THE VALUES SHOWN IN THE TABLE:
    A. HYDRAULIC RAM METHOD: APPLY PROOF TEST LOAD WITHOUT REMOVING THE NUT. IF IT IS NOT POSSIBLE TO TEST WITH THE NUT INSTALLED, REPLACE THE NUT WITH A THREADED COUPLER TO THE LOAD. ANCHOR IS ACCEPTABLE IF NO MOVEMENT IS OBSERVED AT THE TEST LOAD. MOVEMENT MAY BE DETERMINED WHEN THE WASHER UNDER THE NUT BECOMES LOOSE.
    B. TORQUE WRENCH METHOD: TEST ANCHORS TO THE TORQUE LOAD INDICATED IN THE TABLE WITH ONE-HALF TURN OF THE NUT.
12. IF ANY ANCHOR FAILS TESTING, REPLACE ANCHOR AND TEST ADDITIONAL ANCHORS OF THE SAME CATEGORY NOT PREVIOUSLY TESTED UNTIL TWENTY (20) CONSECUTIVE TESTS PASS, THEN RESUME INITIAL TESTING FREQUENCY. CCD WILL BE REQUIRED.

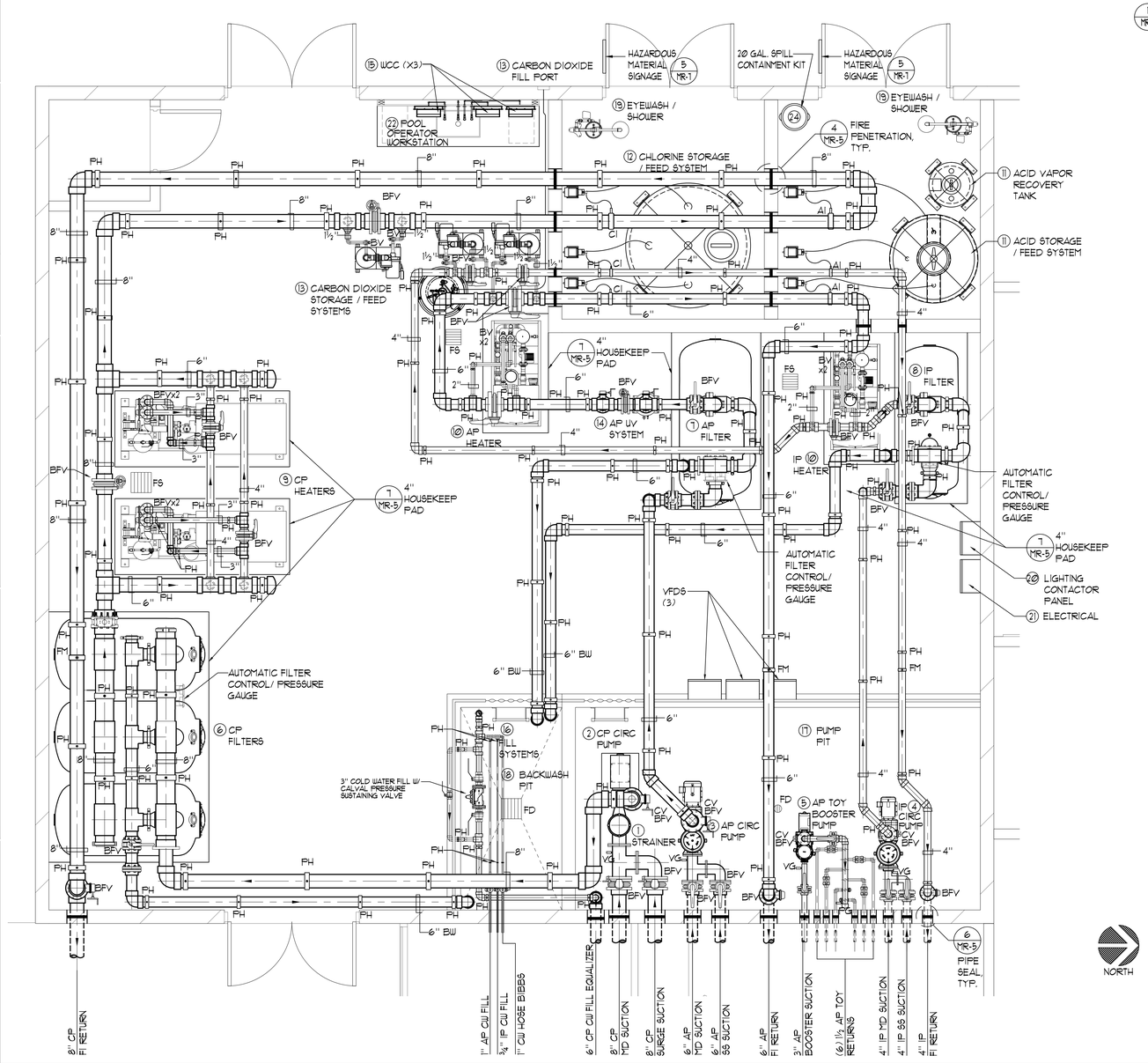

1 MR-1 | 1 MR-5 | 1-4 MR-6 | 1 MR-1

2 MR-2 | 1 MR-5 | 2-3 MR-8

2 MR-2 | 1 MR-5 | 2-3 MR-8

3 MR-2

4 MR-2 | 1 MR-5

4 MR-2 | 1 MR-5

4 MR-2 | 1 MR-5

5 MR-2 | 1 MR-5

6 MR-2 | 1 MR-5

1-3 MR-3 | 5-6 MR-3 | 1 MR-5

1 MR-3 | 4-6 MR-3 | 1 MR-5

8-9 MR-3 | 7-9 MR-3 | 1 MR-5

7 MR-2 | 1 MR-5

1-4 MR-4

5 MR-4

2-3 MR-5

6 MR-4 | 2-3 MR-5

7 MR-1

4 MR-1

1 MR-5 | 1-4 MR-1

1 MR-8

8 AP-4

EQUIPMENT LIST

(1) COMPETITION POOL STRAINER: 'MER-MADE' F.O. SERIES FRP REDUCING BASKET STRAINERS: ONE (1) 8"x6" STANDARD WITH ACRYLIC LID AND TWO (2) STAINLESS STEEL STRAINERS (150lbs.) ONE (1) TOTAL.

(2) COMPETITION POOL CIRCULATION PUMP: 'PACO' 5093-7, 5"x6"x9.60" TYPE 'LC' END SUCTION CENTRIFUGAL PUMP; 1,760 RPM 208V, 3PH, 20HP; RATED AT 820 GPM @ 60 FT. TDH, 78.1% EFFICIENT; PREMIUM EFFICIENCY TEFC MOTOR; EPOXY COAT ALL WET SURFACES. 'PACO', 'AURORA' OR EQUAL. (760 lbs.) PROVIDE 'SPC5' SMART PUMP CONTROL SYSTEM VARIABLE SPEED DRIVE MODEL SPCS020N4X2 SYSTEM 24"x24"x10" DEEP. COORDINATE MOUNTING LOCATION TO MAINTAIN DESIRED CLEARANCES, 208V 3PH. (156 lbs.) ONE (1) TOTAL

(3) ACTIVITY POOL CIRCULATION PUMP: 'JANDY' JCP07-3AT-S, 3PH PUMP; 208V, 7.5HP WITH ACU DRIVE XS #AD075X-23G3-N4X, 7.5HP VARIABLE FREQUENCY DRIVE; SELF PRIMING PUMP, 3,520 RPM RATED AT 380 GPM AT 60 FT. TDH, WITH INTEGRAL STRAINER. PUMP TO BE PROGRAMMED WITH NORMAL FLOW RATE OF 320 GPM. ONE (1) TOTAL. (201 lbs.) INTERLOCK BOOSTER PUMP WITH CIRCULATION PUMP TO ONLY ALLOW BOOSTER PUMP OPERATION WHEN CIRCULATION SYSTEM IS OPERATIONAL. PROVIDE PUMP W/ TWO (2) STRAINER BASKETS.

(4) INSTRUCTIONAL POOL CIRCULATION PUMP: 'JANDY' JCP05-3AT-S, 3PH PUMP; 208V, 5HP WITHACU DRIVE XS #AD050X-23G3-N4X, 5HP VARIABLE FREQUENCY DRIVE; SELF PRIMING PUMP, 3,450 RPM RATED AT 265 GPM AT 60 FT. TDH, WITH INTEGRAL STRAINER. PUMP TO BE PROGRAMMED WITH NORMAL FLOW RATE OF 230 GPM. ONE (1) TOTAL. (118 lbs.) INTERLOCK BOOSTER PUMP WITH CIRCULATION PUMP TO ONLY ALLOW BOOSTER PUMP OPERATION WHEN CIRCULATION SYSTEM IS OPERATIONAL. PROVIDE PUMP W/ TWO (2) STRAINER BASKETS.

(5) ACTIVITY POOL BOOSTER PUMP: 'JANDY' SHPF 1.5, 3PH PUMP; 208V, 2.2HP SELF PRIMING PUMP, 3,450 RPM RATED AT 107 GPM AT 60 FT. TDH, WITH INTEGRAL STRAINER. ONE (1) TOTAL. (51 lbs.) INTERLOCK BOOSTER PUMP WITH CIRCULATION PUMP TO ONLY ALLOW BOOSTER PUMP OPERATION WHEN CIRCULATION SYSTEM IS OPERATIONAL. PROVIDE PUMP W/ TWO (2) STRAINER BASKETS.

(6) COMPETITION POOL FILTERS: EKO³ SYSTEMS GEN 2' #EKO-42210-1006-T-3 AUTOMATIC FILTER CONTROL (AFC) FULLY AUTOMATIC HI-RATE PERMANENT MEDIA FILTER WITH 63 SQ. FT. OF FILTER AREA RATED AT 945 GPM AT 15 GPM/SQ. FT. COMPLETE WITH 8" FACE PIPING, 6" BACKWASH, SEISMIC ANCHORAGE. PROVIDE ALL UTILITIES, PIPING, VALVING ETC. (1,402 lbs. EACH TANK) EKO³ SYSTEMS GEN 2' OR EQUAL. PROVIDE SIGNET P51530-PX FLOSENSOR WITH DIGITAL READ-OUT. ONE (1) SYSTEM TOTAL.

(7) ACTIVITY POOL FILTER: EKO³ SYSTEMS GEN 2' #EKO-42230-0806-T-1 AUTOMATIC FILTER CONTROL (AFC) FULLY AUTOMATIC HI-RATE PERMANENT MEDIA FILTER WITH 23 SQ. FT. OF FILTER AREA RATED AT 345 GPM AT 15 GPM/SQ. FT. COMPLETE WITH 8" FACE PIPING, 6" BACKWASH, SEISMIC ANCHORAGE. PROVIDE ALL UTILITIES, PIPING, VALVING ETC. (8,155 lbs.) EKO³ SYSTEMS GEN 2' OR EQUAL. PROVIDE SIGNET P51530-PX FLOSENSOR WITH DIGITAL READ-OUT. ONE (1) SYSTEM TOTAL.

(8) INSTRUCTIONAL POOL FILTER: EKO³ SYSTEMS GEN 2' #EKO-34175-0806-T-1 AUTOMATIC FILTER CONTROL (AFC) FULLY AUTOMATIC HI-RATE PERMANENT MEDIA FILTER WITH 17.5 SQ. FT. OF FILTER AREA RATED AT 262 GPM AT 15 GPM/SQ. FT. COMPLETE WITH 6" FACE PIPING, 6" BACKWASH, SEISMIC ANCHORAGE. PROVIDE ALL UTILITIES, PIPING, VALVING ETC. (4,405 lbs.) EKO³ SYSTEMS GEN 2' OR EQUAL. PROVIDE SIGNET P51530-PX FLOSENSOR WITH DIGITAL READ-OUT. ONE (1) SYSTEM TOTAL.

(9) COMPETITION POOL HEATERS: INDIRECT FIRED POOL HEATING PACKAGE SYSTEM, 'AQUA5' CREST WITH SMART TOUCH CONTROL CONDENSING MODULATING BOILER, TITANIUM PLATE AND FRAME HEAT EXCHANGER WITH CPVC CONNECTIONS, FACTORY ASSEMBLED SKID MOUNTED PACKAGE, CALIFORNIA CODE CONTROLS, 1½" NATURAL GAS CONNECTION, 3" WATER CONNECTIONS, 8" DIAMETER VENT SIZE, PVC VENTED; 2,000,000 BTU PER HOUR INPUT, 97% EFFICIENT, PROVIDE ¾" COLD WATER WITH ADJACENT FLOOR SINK FOR CONDENSATE. 'LOCHINVAR AF02000N', WEIGHT = 3,397 lbs. TWO (2) TOTAL.

(10) IP / AP HEATERS: INDIRECT FIRED POOL HEATING PACKAGE SYSTEM, LOCHINVAR 'AQUA5' WITH MODULATING BOILER, TITANIUM TUBE AND SHELL HEAT EXCHANGER WITH CPVC CONNECTIONS, FACTORY ASSEMBLED SKID MOUNTED PACKAGE, CALIFORNIA CODE CONTROLS, 1" NATURAL GAS CONNECTION, 2" WATER CONNECTIONS, 6" DIAMETER VENT SIZE, PVC VENTED; 125,000 BTU PER HOUR INPUT, 98% EFFICIENT, PROVIDE ¾" COLD WATER WITH ADJACENT FLOOR SINK FOR CONDENSATE. 'LOCHINVAR AFN125', WEIGHT = 1,338 lbs. TWO (2) TOTAL.

(11) ACID STORAGE / FEED SYSTEM: 'CHEM-TAINER' 350 GALLON #TC5356DC; DUAL STORAGE/CONTAINMENT TANK WITH LID SEISMICALLY RESTRAINED; OPERATING WEIGHT =(2,920lbs.) COMPLIES WITH FED. REG #40CFR-264-193. PROVIDE A COMPLETE ACID VAPOR RECOVERY SYSTEM. ONE (1) TOTAL. COMPETITION POOL FEED SYSTEM SHALL BE 'LMI' #SD43-88P-KSI; 288 GPD @ 150 PSI. ONE (1) TOTAL. ACTIVITY POOL AND INSTRUCTIONAL POOL FEED SYSTEMS SHALL BE STENNER 85M5; 85GPD @ 100 PSI. BOTH PUMPS WITH FRP SHELF BRACKETS TWO (2) TOTAL. HARD PIPE TO POINT OF INJECTION.

(12) CHLORINE STORAGE / FEED SYSTEM: PROVIDE 'CHEM-TAINER' 1000 GALLON #TC5971DC; DUAL STORAGE/CONTAINMENT TANK WITH LID SEISMICALLY RESTRAINED; OPERATING WEIGHT = (4,165lbs). COMPLIES WITH FED. REG #40CFR-264-193. COMPETITION POOL FEED SYSTEM SHALL BE 'LMI' #SD43-88P-KSI; 288 GPD @ 150 PSI. ONE (1) TOTAL. ACTIVITY POOL AND INSTRUCTIONAL POOL FEED SYSTEMS SHALL BE STENNER 85M5; 85GPD @ 100 PSI. BOTH PUMPS WITH FRP SHELF BRACKETS TWO (2) TOTAL. HARD PIPE TO POINT OF INJECTION.

(13) CARBON DIOXIDE STORAGE / FEED SYSTEM: PROVIDE ONE (1) 'NOVO-750', 750 lb. CRYOGENIC LIQUID CO2 STORAGE TANK WITH REMOTE FILL PORT, 594 LIQUID lbs. (5,185 CUBIC FEET OF GASEOUS CO2 AT NTP.) ONE (1) TOTAL. PROVIDE EKO FH-MT8 CO2 HIGH EFFICIENCY FEED SYSTEM WITH ALKALINITY CONTROL, 0 TO 160 SCFH FEED CAPACITY BOOSTER PUMP, PIPING INJECTOR, FLOWMETER, RELAYS AND ACID FEED ALKALINITY CONTROL. THREE (3) SYSTEMS TOTAL (92lbs. EA.) PROVIDE HARD WIRED 'ANALOX' #API KIT CO2 DETECTOR WITH AUDIBLE AND VISUAL ALARMS IN EACH CHEMICAL ROOM, UL 1911 STANDARD LISTED, ONE (1) TOTAL.

(14) ACTIVITY POOL ULTRA VIOLET TREATMENT SYSTEM: 'EVOQUA' WATER UV MODEL WF-115-4-N, VALIDATED AT 396 GPM, 4" FLANGED CONNECTION N-LINE UV WITH ONE (1) LAMPS @ 1,500 WATTS, 208V 1PH CONTROL UNIT. 20"X20"X10" DEEP. (66 lbs.). PROVIDE PIPING BYPASS, VALVING, ETS EZ VALVE STRAINER AND INSTALLATION AND PIPING PER MANUFACTURER'S RECOMMENDATIONS. ONE (1) SYSTEM TOTAL.

(15) COMPETITION POOL / ACTIVITY POOL / INSTRUCTIONAL POOL WATER CHEMISTRY CONTROLLER(S): PROVIDE ETHERNET CONNECTION TO 'BECSYS' CS-BECSYS1-BP-E WATER CHEMISTRY CONTROLLER. PROVIDE COMPLETE SYSTEM CONTROL PACKAGE W/ BECSYS PROTOCOL CONVERTER W/ BACNET FIELD SERVER DEVICE FOR INTEGRATION INTO THE BMS. BMS INTERFACE TO PROVIDE THE FOLLOWING POINTS OF DATA:TEMPERATURE, ORP, pH, WATER FLOW, ALARM, ALKALINITY, 'BECSYS SYSTEM 7', 'IMPACT', 'WALLACE & TIERNAN' OR APPROVED EQUAL. THREE (3) TOTAL. COORDINATE COMMUNICATION SIGNAL WITH MEP CONTRACTOR.

(16) COMPETITION POOL FILL SYSTEM: 3" 'CLA-VAL' FILL SYSTEM TO INCLUDE 3" 'CLA-VAL' SOLENOID CONTROL VALVE #136-01BY, 3" DUCT IRON, EPOXY COATED BODY WITH CAST IRON DISC RETAINER AND DIAPHRAGM WASHER, BRONZE TRIM, FLANGED GLOBE PATTERN, 120V AT 60HZ SOLENOID WIRING SHALL BE WIRED TO WATER CHEMISTRY CONTROLLER. PROVIDE 6" AIR GAP AT FILL POINT. SEE MEP PLANS FOR WATER SUPPLY PIPING.

(17) PUMP PIT: 20'-0" x 10'-0" x 5'-0" DEEP. PROVIDE 1½"ø GALV STEEL GUARDRAIL. MEP SHALL PROVIDE FLOOR DRAINS. PROVIDE WATERPROOFING PER SPECIFICATIONS. ACCESS LADDER TO BE 'FIBERGRATE' DYNARAIL FRP OR EQUAL.

(18) BACKWASH PIT: 5'-0" x 10'-0" x 5'-0" DEEP WITH 8"ø P-TRAP OUTLET TO SEWER. PROVIDE WATERPROOFING PER SPECIFICATIONS. COORDINATE WITH STRUCTURAL AND PLUMBING PLANS.

(19) EYEWASH/SHOWER: HAWS MODEL #8309WC BARRIER FREE COMBINATION SHOWER AND EYE/FACE WASH WITH CORROSION RESISTANT PROTECTION. SEE MEP SHEETS FOR WATER SUPPLY PIPING. TWO (2) TOTAL.

(20) LIGHTING CONTACTOR PANEL: 'ALLEN BRADLEY' #500L; OR APPROVED EQUAL. PANEL SHALL BE MOUNTED IN A NEMA 4 HINGED COVER - LOCKABLE ENCLOSURE. CONTACTORS TO BE SWITCHED BY MOMENTARY SWITCH EQUAL TO 'HUBBELL' #1557 MOUNTED IN J-BOX IN MECHANICAL EQUIPMENT ROOM. REFER TO ELECTRICAL PLANS FOR LOCATION OF OWNER COORDINATED REMOTE UNDERWATER LIGHT SWITCH.

(21) ELECTRICAL: PROVIDE ALL ELECTRICAL WIRING, CONDUIT, PANEL(S), STARTER/DISCONNECT INTERCONNECT(S) ETC. AS REQUIRED FOR PROPER EQUIPMENT INSTALLATION PER MANUFACTURERS RECOMMENDATIONS AND SHOP DRAWINGS. COORDINATE ALL WORK WITH OTHER TRADES AS REQUIRED. REFER TO ELEC. PLANS FOR ALL ADDITIONAL INFO.

(22) POOL OPERATOR WORKSTATION DESK: 'TOTAL LAB SOLUTIONS' EPOXY COUNTERTOP WITH DROP-IN SINK AND TWO (2) END CABINETS. FURNISH WITH WALL MOUNTED TWO (2) FAUCETS 'BROEN BOSS' OR APPROVED EQUAL. SEE MEP PLANS FOR WATER SUPPLY PIPING.

(23) ACTIVITY POOL / INSTRUCTIONAL POOL FILL SYSTEM(S): NICHE MOUNTED 'PEM' MODEL L104-46 WALL MOUNTED SENSOR UNIT WITH 'PEM' L104-100A, 115V UL. LISTED CONTROL PANEL, SOLENOID VALVES, ETC. 1" FILL.

(24) 20 GALLON 'U-LINE' #S-18303 SPILL CONTAINMENT KIT FOR EMERGENCY ON-SITE CHEMICAL SPILL CONTAINMENT. PROVIDE ONE (1) TOTAL. SHALL BE LOCATED ACID CHEMICAL ROOM AND SHALL BE ABLE TO SERVICE BOTH CHEMICAL ROOMS WITH A 30 SECOND RESPONSE TIME.

1 **MECHANICAL ROOM LAYOUT PLAN** 3/8"=1'-0"

AGENCY

REVIEWED FOR CODE COMPLIANCE BY: WILLDAN ENGINEERING

Approval of these plans & specifications shall not be construed to be a permit for, or an approval of any violation of any Federal, State, County or City laws or ordinances. One set of approved plans must be kept on the job until completion.

9:22:11 AM Jul 21, 2025

FLEWELLING & MOODY
architects for education

HEADQUARTERS OFFICE:
815 Colorado Blvd. Suite 200
Los Angeles, California 90041
323.543.8300 fax 323.543.8198
E-Mail: fm-losangeles@flewelling-moody.com

ANTELOPE VALLEY OFFICE:
1035 West Lancaster Bouldvard
Lancaster, California 93534
661.949.0771 FAX 661.949.2843
E-Mail: fm-lancaster@flewelling-moody.com

An Employee Owned Corporation

ARCHITECT

LICENSED ARCHITECT GREGORY S. [illegible] No. C-35802 REN. 07/31/27 STATE OF CALIFORNIA

CONSULTANT

AQUATIC DESIGN GROUP
2226 Faraday Ave. Carlsbad, CA 92008
AquaticDesignGroup.com
760.438.8400

Drawn by:

Check by:

Revisions

No.	Date	Description

All dimensions must be checked at the job by the contractor who accepts full responsibility for their accuracy under the contract. These plans & the specifications in connection therewith have been prepared for a specific site. Any and all responsibility for their use in whole or in part on any other site is hereby disclaimed by Flewelling & Moody.

CITY OF RIDGECREST

SGT. JOHN PINNEY MEMORIAL POOL REPLACEMENT

205 S WARNER ST, RIDGECREST, CA 93555

Drawing Title

MECHANICAL ROOM LAYOUT PLAN

Job No. 3055-0100

Sheet No. **MR-1**

Date 9/25/2006

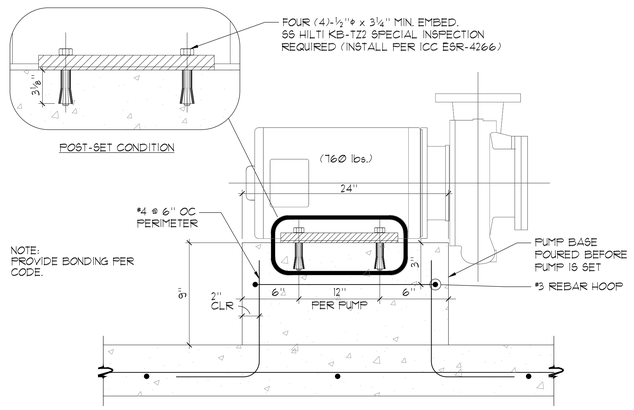

1 PACO PUMP ANCHORAGE NO SCALE

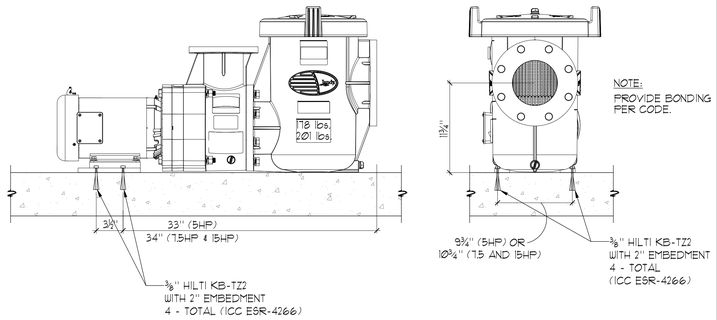

2 JANDY JCP PUMP ANCHORAGE NO SCALE

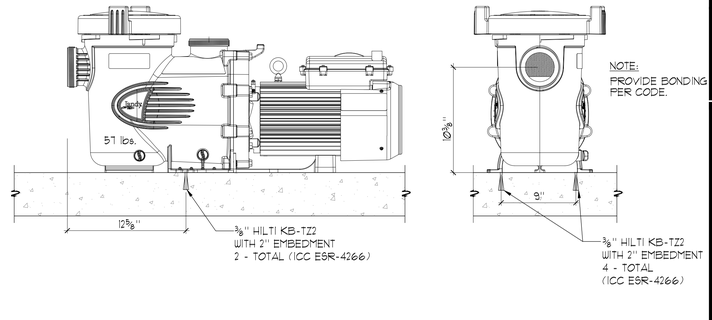

3 JANDY SHPF PUMP ANCHORAGE NO SCALE

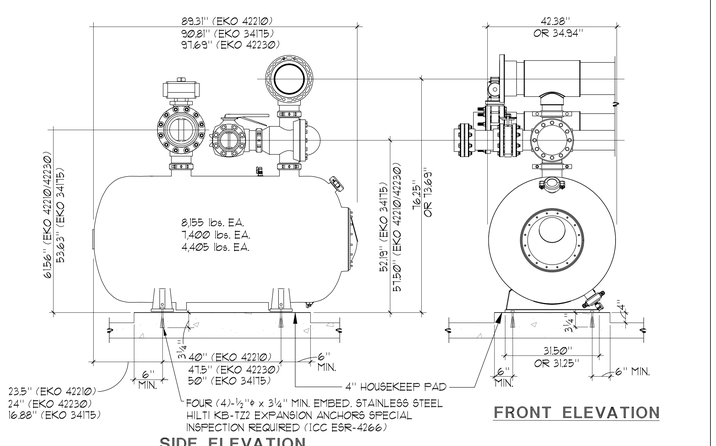

4 FILTER ANCHORAGE NO SCALE

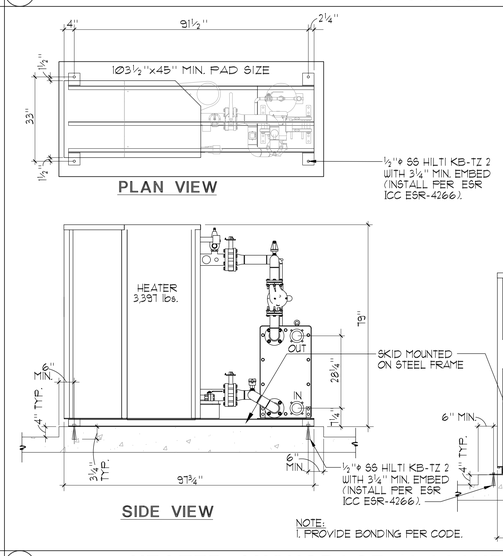

5 HEATER ANCHORAGE (2,000KBTU) ½" = 1'-0"

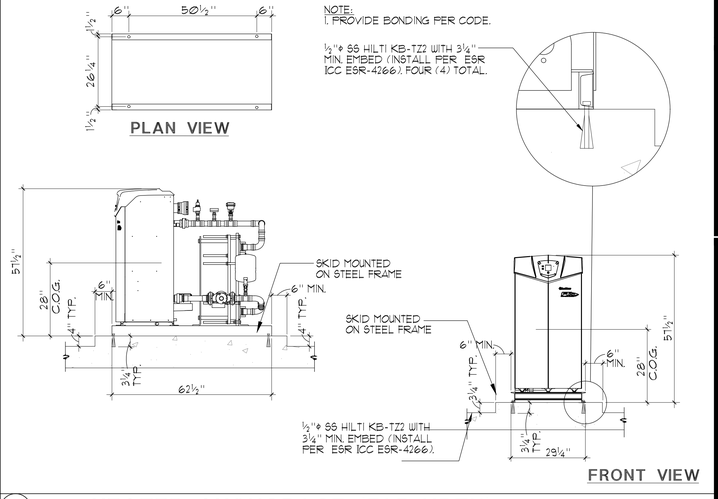

6 HEATER ANCHORAGE (725 KBTU) ½" = 1'-0"

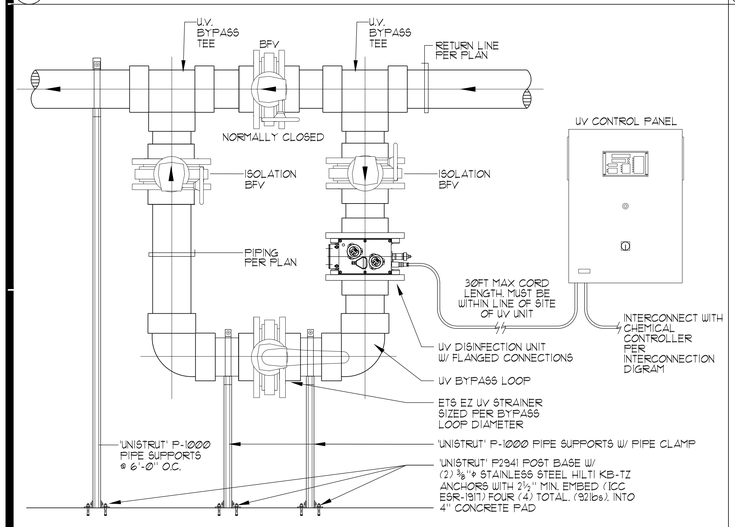

7 U.V. DISINFECTION UNIT INSTALLATION DETAIL NO SCALE

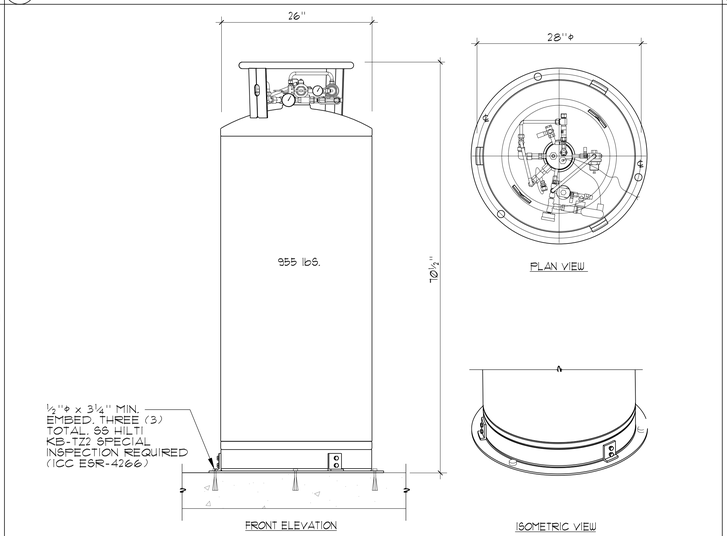

8 CO2 TANK ANCHORAGE DETAIL NO SCALE

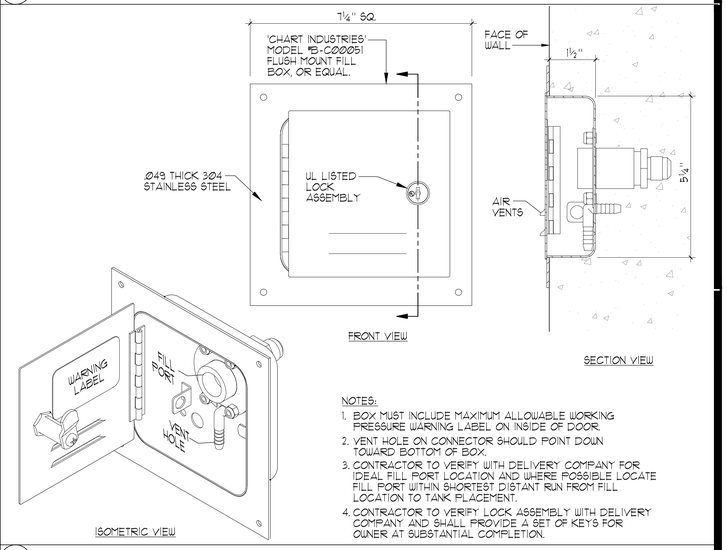

9 CO2 FLUSH MOUNT FILL BOX ½"=1'

AGENCY

REVIEWED FOR CODE COMPLIANCE BY: WILLDAN ENGINEERING

Approval of these plans & specifications shall not be construed to be a permit for, or an approval of any violation of any Federal, State, County or City laws or ordinances. One set of approved plans must be kept on the job until completion.

9:22:11 AM Jul 21, 2025

FLEWELLING & MOODY
architects *for* education

HEADQUARTERS OFFICE:
815 Colorado Blvd. Suite 200
Los Angeles, California 90041
323.543.8300 fax 323.543.8198
E-Mail: fm-losangeles@flewelling-moody.com

ANTELOPE VALLEY OFFICE:
1035 West Lancaster Bouldvard
Lancaster, California 93534
661.949.0771 FAX 661.949.2843
E-Mail: fm-lancaster@flewelling-moody.com

An Employee Owned Corporation

ARCHITECT

LICENSED ARCHITECT GREGORY S. [illegible] C-35802 REN. 07/31/27 STATE OF CALIFORNIA

CONSULTANT

AQUATIC DESIGN GROUP
2226 Faraday Ave. Carlsbad, CA 92008
AquaticDesignGroup.com
760.438.8400

Drawn by:

Check by:

Revisions

No.	Date	Description

All dimensions must be checked at the job by the contractor who accepts full responsibility for their accuracy under the contract. These plans & the specifications in connection therewith have been prepared for a specific site. Any and all responsibility for their use in whole or in part on any other site is hereby disclaimed by Flewelling & Moody.

CITY OF RIDGECREST

SGT. JOHN PINNEY MEMORIAL POOL REPLACEMENT

205 S WARNER ST, RIDGECREST, CA 93555

Drawing Title

DETAILS

Job No. 3055-0100

Date 9/25/2006

Sheet No. MR-2

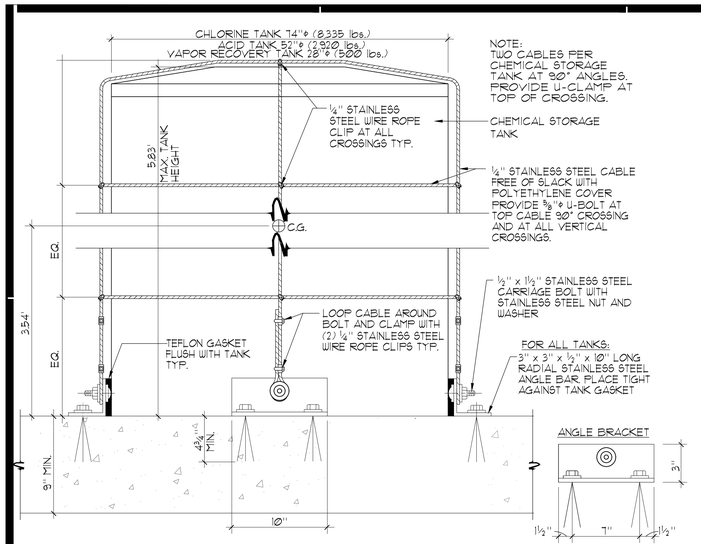

1 CHEMICAL TANK ANCHOR (TYP. 3 TANKS) NO SCALE

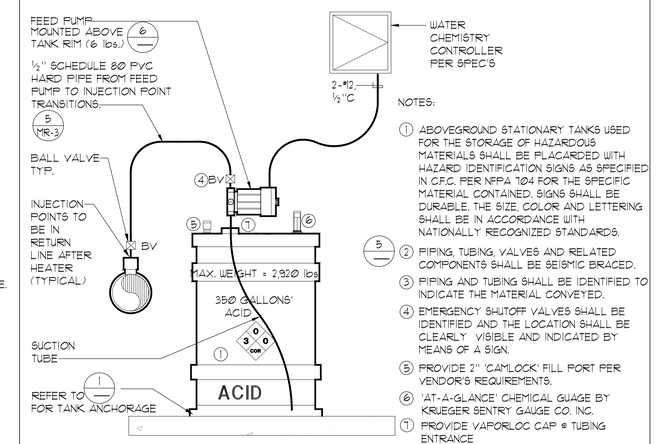

2 MURIATIC ACID FEED SCHEMATIC NO SCALE

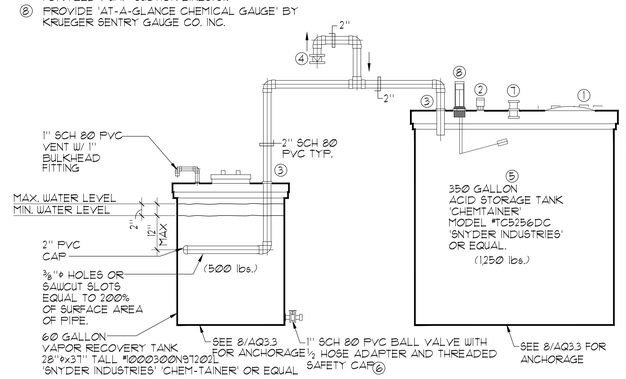

3 VAPOR RECOVERY TANK 3"=1'-0"

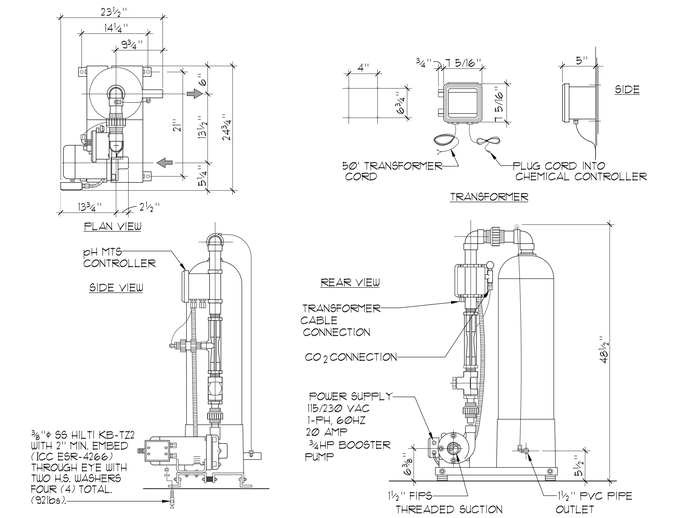

4 SODIUM HYPOCHLORITE FEED SCHEMATIC NO SCALE

5 CHEMICAL FEED PIPING DETAIL NO SCALE

6 CHEMICAL PUMP SHELF 6"=1'-0"

7 CARBON DIOXIDE pH MTS CONTROLLER NO SCALE

8 TYPICAL CARBON DIOXIDE pH-MTS INSTALLATION NO SCALE

9 PRESSURE/VACUUM GAUGE 6"=1'-0"

AGENCY

REVIEWED FOR CODE COMPLIANCE BY: WILLDAN ENGINEERING

Approval of these plans & specifications shall not be construed to be a permit for, or an approval of any violation of any Federal, State, County or City laws or ordinances. One set of approved plans must be kept on the job until completion.

9:22:11 AM Jul 21, 2025

FLEWELLING & MOODY
architects *for* education

HEADQUARTERS OFFICE:
815 Colorado Blvd. Suite 200
Los Angeles, California 90041
323.543.8300 fax 323.543.8198
E-Mail: fm-losangeles@flewelling-moody.com

ANTELOPE VALLEY OFFICE:
1035 West Lancaster Bouldvard
Lancaster, California 93534
661.949.0771 FAX 661.949.2843
E-Mail: fm-lancaster@flewelling-moody.com

An Employee Owned Corporation

ARCHITECT
LICENSED ARCHITECT GREGORY S. [illegible] No. 35802 REN. 07.31.27 STATE OF CALIFORNIA

CONSULTANT
AQUATIC DESIGN GROUP
2226 Faraday Ave. Carlsbad, CA 92008
AquaticDesignGroup.com
760.438.8400

Drawn by:

Check by:

Revisions

No.	Date	Description

All dimensions must be checked at the job by the contractor who accepts full responsibility for their accuracy under the contract. These plans & the specifications in connection therewith have been prepared for a specific site. Any and all responsibility for their use in whole or in part on any other site is hereby disclaimed by Flewelling & Moody.

CITY OF RIDGECREST

SGT. JOHN PINNEY MEMORIAL POOL REPLACEMENT

205 S WARNER ST, RIDGECREST, CA 93555

Drawing Title

DETAILS

Job No. 3055-0100

Date 9/25/2006

Sheet No. MR-3

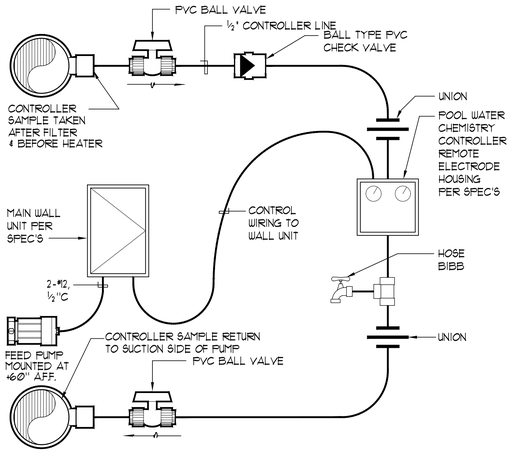

1 WATER CHEMISTRY CONTROLLER SCHEMATIC NO SCALE

RELAY LEGEND
RELAY 1 = pH FEED
RELAY 2 = CHLORINE FEED
RELAY 3 = ALARM OUTPUT
RELAY 4 = HEATER TO BMS
RELAY 5 = SENSOR WASH
RELAY 6 = FILTER BACKWASH OUTPUT
RELAY 7 = RECIRC PUMP

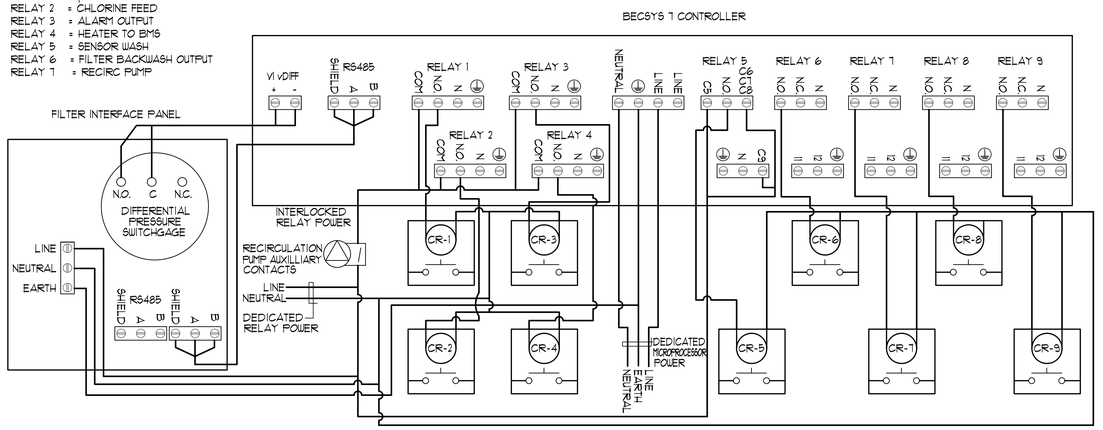

BECSYS SYSTEM FOR EACH POOL SHALL SEND INDIVIDUAL COMMUNICATION INFORMATION TO BMS SYSTEM. DATA FOR ALL PARAMETERS OF WATER CHEMISTRY CONTROLLER AND LOW VOLTAGE SIGNAL TO BMS FOR HEAT EXCHANGER CONTROL.

2 BECSYS 7 RELAY OUTPUTS NO SCALE

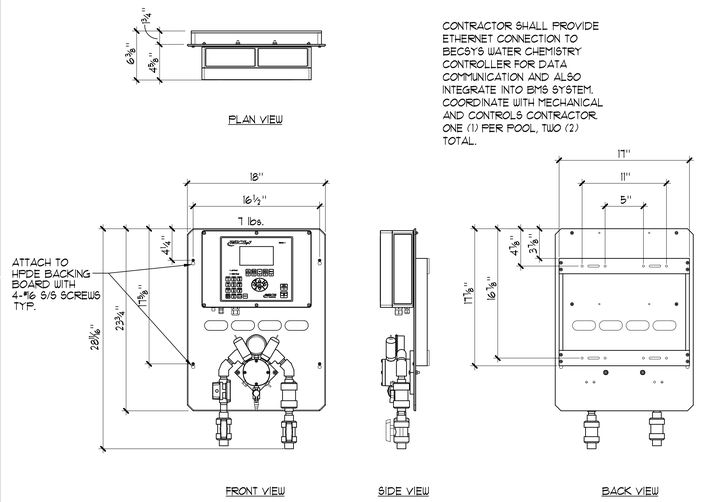

CONTRACTOR SHALL PROVIDE ETHERNET CONNECTION TO BECSYS WATER CHEMISTRY CONTROLLER FOR DATA COMMUNICATION AND ALSO INTEGRATE INTO BMS SYSTEM. COORDINATE WITH MECHANICAL AND CONTROLS CONTRACTOR. ONE (1) PER POOL, TWO (2) TOTAL.

3 BECSYS 7 WATER CHEMISTRY CONTROLLER 1½"=1'-Ø"

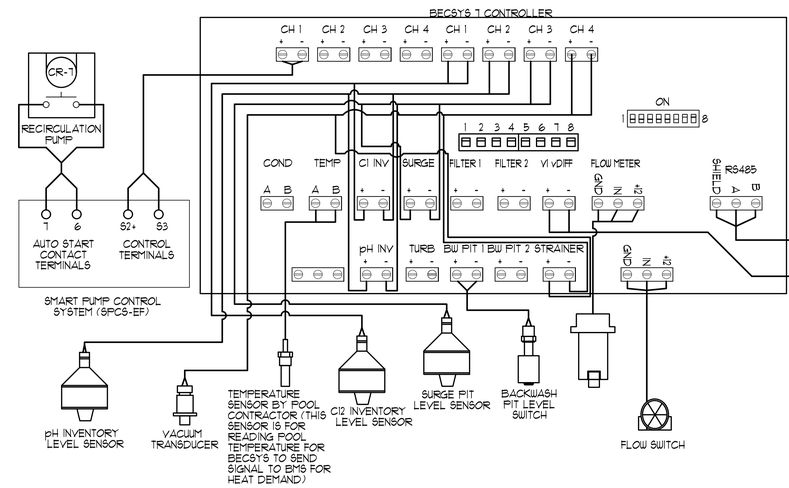

CONTRACTOR SHALL PROVIDE ETHERNET CONNECTION TO BECSYS WATER CHEMISTRY CONTROLLER FOR DATA COMMUNICATION AND ALSO INTEGRATE INTO BMS SYSTEM. COORDINATE WITH MECHANICAL AND CONTROLS CONTRACTOR. ONE (1) PER POOL, TWO (2) TOTAL.

4 BECSYS 7 RELAY INPUTS NO SCALE

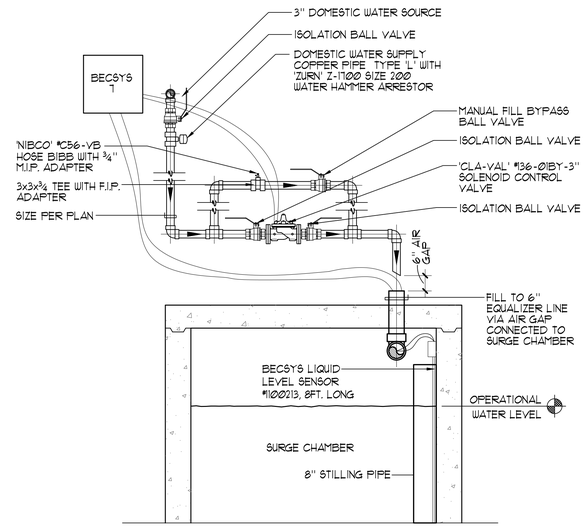

5 AUTOMATIC/MANUAL WATER MAKE-UP SCHEMATIC NO SCALE

NOTES:

1. INSTALL AND WIRE THE BACKWASH PIT LEVEL SENSORS PER THE MANUFACTURER'S RECOMMENDATIONS.
2. INSTALL THE LOW LEVEL BACKWASH SENSOR 6" ABOVE FINISH FLOOR OF BACKWASH PIT.
3. THE CONTRACTOR SHALL INSTALL THE HIGH LEVEL BACKWASH SENSOR IN THE BACKWASH PIT AT THE HEIGHT REQUIRED TO ALLOW FOR A COMPLETE FILTER BACKWASH CYCLE AND TO PREVENT A FLOOD CONDITION DURING AN EMERGENCY FILTER BACKWASH SHUTDOWN EVENT.
4. DURING THE SWIMMING POOL STARTUP AND TRAINING PROCEDURE THE CONTRACTOR SHALL DEMONSTRATE THAT THE HIGH AND LOW BACKWASH LEVEL SENSORS ARE PROPERLY INSTALLED AND OPERATING PER THE MANUFACTURER'S RECOMMENDATIONS.
5. THE CONTRACTOR SHALL PROVIDE WRITTEN DOCUMENTATION OF A SUCCESSFUL TEST.

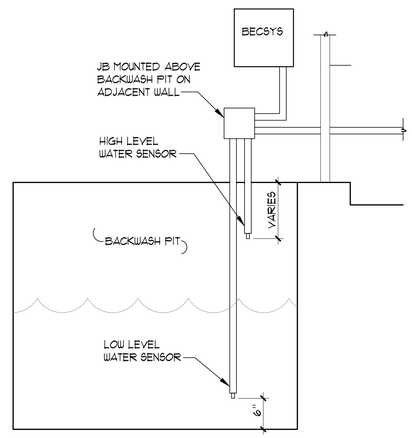

6 HIGH & LOW BACKWASH PIT LEVEL SENSORS NO SCALE

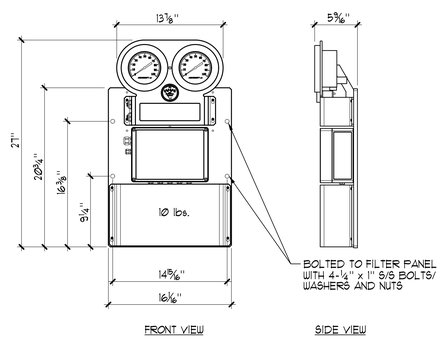

7 BECSYS FILTER INTERFACE SYSTEM 1½"=1'-Ø"

AGENCY

REVIEWED FOR CODE COMPLIANCE BY:
WILLDAN ENGINEERING
Approval of these plans & specifications shall not be construed to be a permit for, or an approval of any violation of any Federal, State, County or City laws or ordinances. One set of approved plans must be kept on the job until completion.
9:22:11 AM Jul 21, 2025

FLEWELLING & MOODY
architects *for* education

HEADQUARTERS OFFICE:
815 Colorado Blvd. Suite 200
Los Angeles, California 90041
323.543.8300 fax 323.543.8198
E-Mail: fm-losangeles@flewelling-moody.com

ANTELOPE VALLEY OFFICE:
1035 West Lancaster Bouldvard
Lancaster, California 93534
661.949.0771 FAX 661.949.2843
E-Mail: fm-lancaster@flewelling-moody.com

An Employee Owned Corporation

ARCHITECT

LICENSED ARCHITECT GREGORY S. [illegible] C-35802 REN. 07/31/27 STATE OF CALIFORNIA

CONSULTANT

AQUATIC DESIGN GROUP
2226 Faraday Ave. Carlsbad, CA 92008
AquaticDesignGroup.com
760.438.8400

Drawn by:
Check by:
Revisions

No.	Date	Description

All dimensions must be checked at the job by the contractor who accepts full responsibility for their accuracy under the contract. These plans & the specifications in connection therewith have been prepared for a specific site. Any and all responsibility for their use in whole or in part on any other site is hereby disclaimed by Flewelling & Moody.

CITY OF RIDGECREST

SGT. JOHN PINNEY MEMORIAL POOL REPLACEMENT

205 S WARNER ST, RIDGECREST, CA 93555

Drawing Title

DETAILS

Job No. 3055-0100
Date 9/25/2006
Sheet No. MR-4

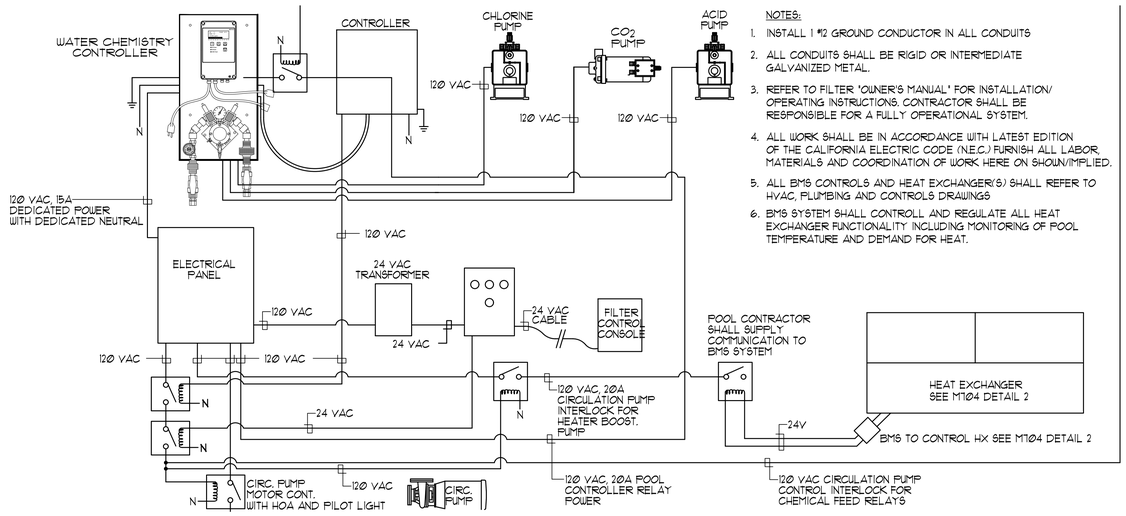

NOTES:

1. INSTALL 1 #12 GROUND CONDUCTOR IN ALL CONDUITS
2. ALL CONDUITS SHALL BE RIGID OR INTERMEDIATE GALVANIZED METAL.
3. REFER TO FILTER "OWNER'S MANUAL" FOR INSTALLATION/ OPERATING INSTRUCTIONS. CONTRACTOR SHALL BE RESPONSIBLE FOR A FULLY OPERATIONAL SYSTEM.
4. ALL WORK SHALL BE IN ACCORDANCE WITH LATEST EDITION OF THE CALIFORNIA ELECTRIC CODE (N.E.C.) FURNISH ALL LABOR, MATERIALS AND COORDINATION OF WORK HERE ON SHOWN/IMPLIED.
5. ALL BMS CONTROLS AND HEAT EXCHANGER(S) SHALL REFER TO HVAC, PLUMBING AND CONTROLS DRAWINGS
6. BMS SYSTEM SHALL CONTROLL AND REGULATE ALL HEAT EXCHANGER FUNCTIONALITY INCLUDING MONITORING OF POOL TEMPERATURE AND DEMAND FOR HEAT.

1 POOL MECHANICAL ELECTRICAL INTERCONNECTION DIAGRAM

NO SCALE

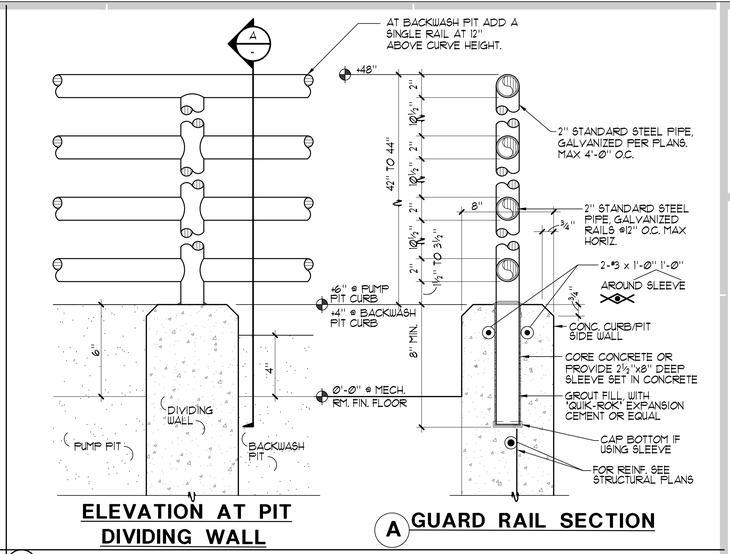

ELEVATION AT PIT DIVIDING WALL

A GUARD RAIL SECTION

2 PIT GUARD RAIL

3"=1'-0"

CONTRACTOR TO VERIFY:

- (A) OVERALL LADDER HEIGHT
- (B) F.F. TO TOP OF PARAPET
- (C) LADDER WIDTH

FIBERGRATE' D'NARAIL FRP ACCESS LADDER COLOR TO BE GRAY.

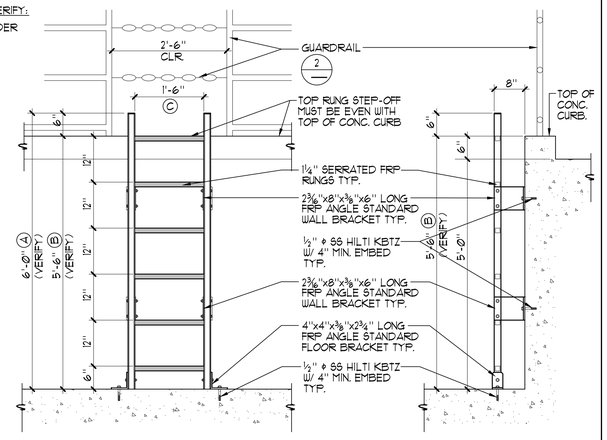

1 FRONT ELEVATION

2 SIDE ELEVATION

3 PUMP PIT ACCESS LADDER

¾"=1'-0"

NOTES:

1. THE SPACE BETWEEN THE PENETRATING ITEM AND WALL BOARD MUST ACCOMODATE AT LEAST ONE WRAP (¼") OF 3M FIRE BARRIER FS-195 WRAP/STRIP.
2. IF THE ANNULAR SPACE IS LESS THAN ½" ONE WRAP OF FS-195 WRAP/STRIP IS REQUIRED. IF THE ANNULAR SPACE IS ½" OR GREATER, FILL WITH ADDITIONAL WRAPS OF FS-195 WRAP/STRIP UNTIL ANNULAR SPACE IS LESS THAN ¼". FS-195 WRAP/STRIP MAY BE FRICTION FIT INTO OPENING, SECURED WITH FOIL TAPE OR 16 GAUGE STEEL TIE WIRE.
3. SLIDE THE FS-195 WRAP/STRIP INTO THE OPENING, LEAVING A MAXIMUM ¾" EXPOSED WRAP BEYOND THE WALL SURFACE.
4. SEAL THE FS-195 WRAP/STRIP EDGES AND SEAMS WITH A ¼" MINIMUM BEAD OF 3M FIRE BARRIER CP 25 CAULK.
5. INSTALL 3M FIRESTOP ON BOTH SIDES OF THE WALL.
6. THESE RECOMMENDATIONS ARE BASED ON PRODUCT PERFORMANCE PER ASTM E-814 (UL 1479) FIRE TEST AND UL THROUGH PENETRATION FIRESTOP SYSTEM #147
7. THE DETAIL SHOWN IS FOR REFERENCE ONLY. THE PENETRATIONS OF WALLS AND WALL MEMBRANES/ FLOORS/RATED ROOF REQUIRED TO HAVE A FIRE-RESISTANCE RATING SHALL BE PROTECTED WITH THROUGH-PENETRATION FIRE STOPS SUITABLE FOR THE METHOD OF PENETRATION. THROUGH-PENETRATION FIRE STOPS SHALL BE IN ACCORDANCE WITH CBC SECTION 712.

NOTE: UL #49, CSFM #4485-941:00 — UL SYSTEM #147

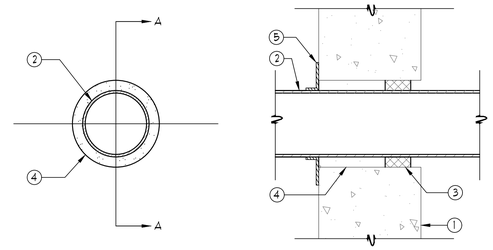

1. SUBSTRATE (FLOOR OR WALL) CONCRETE OR CMU
2. PENETRATING ITEM
3. DAMMING MATERIAL
4. 3M BRAND FIRE BARRIER (CAULK CP-25 OR PUTTY 303)
5. REMOVABLE FORM (TAPE OR CARDBOARD)

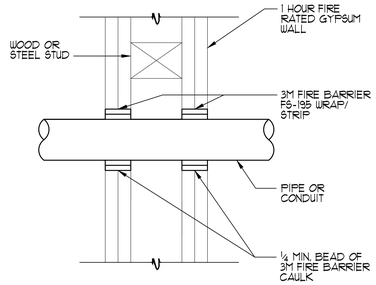

NOTES:

1. FOR REFERENCE ONLY. THE CONTRACTOR SHALL PROVIDE U.L. LISTED & CSFM APPROVED ASSEMBLIES.
2. FOR PIPE PENETRATIONS THRU ALL TYPES OF RATED WALLS, ANY DEVIATION SHALL BE REVIEWED & APPROVED BY STATE FIRE MARSHALL PRIOR TO INSTALLATION.
3. FIRE CAULK MATERIALS SHALL BE 3M, HILTI, OR APPROVED EQUAL.

4 PIPE PENETRATION THRU RATED WALL DETAIL

NO SCALE

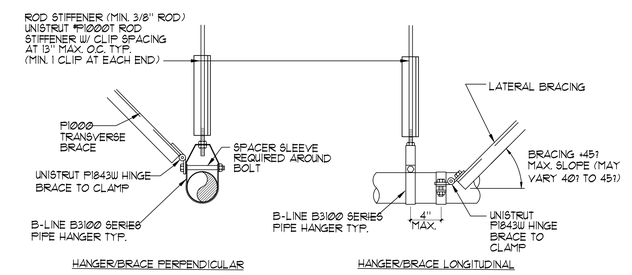

HANGER/BRACE PERPENDICULAR

HANGER/BRACE LONGITUDINAL

NOTE:
REFER TO STRUCTURAL DRAWING FOR CONNECTIONS TO ROOF STRUCTURAL SYSTEMS.

HANGER ROD SIZES/TABLE
5/8" DIA. AT 4" PIPING MAX. ROD LENGTH = 30"
3/4" DIA. AT 6" PIPING MAX. ROD LENGTH = 30"
3/4" DIA. AT 8" PIPING MAX. ROD LENGTH = 30"
7/8" DIA. AT 12" PIPING MAX. ROD LENGTH = 30"

MAX. PIPE HANGER SPACING
4" PIPING OR SMALLER = 8'-0" O.C.
6" PIPING = 6'-0" O.C.
8" PIPING = 6'-0" O.C.
12" PIPING = 4'-0" O.C.

NOTES:

1. FOR COPPER TUBING USE COPPER PLATED OR PAINTED B3104CT, FELT LINED B3100F, OR PLASTIC COATED B3100C.
2. PROVIDE BRACING FOR EACH PIPE RUN IN TWO DIRECTIONS.
3. REFER TO MR1 FOR PIPE HANGER LOCATIONS.

5 'UNISTRUT' PIPING HANGER/SUPPORT DETAIL

NO SCALE

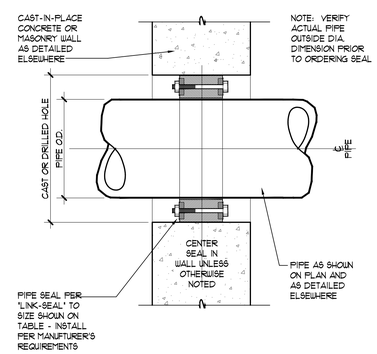

PIPE SIZE (NOMINAL)	OUTSIDE DIAMETER (PIPE O.D.)	CAST OR DRILLED HOLE SIZE I.D.	LINK-SEAL SIZE NO.	NO. OF LINKS PER SEAL
1/2"	Ø.840	2.0	LS-200	4
3/4"	1.050	2.5	LS-275	5
1"	1.315	3.0	LS-300	4
1-1/4"	1.660	3.0	LS-275	7
1-1/2"	1.900	3.5	LS-300	5
2"	2.375	4.0	LS-300	6
2-1/2"	2.875	4.0	LS-200	9
3"	3.500	5.0	LS-300	8
3-1/2"	4.000	6.0	LS-325	5
4"	4.500	6.0	LS-300	10
5"	5.563	8.0	LS-425	6
6"	6.625	10.0	LS-475	10
8"	8.625	12.0	LS-475	12
10"	10.75	14.0	LS-400	10
12"	12.75	16.0	LS-400	12
14"	14.00	16.0	LS-325	15
16"	16.00	18.0	LS-325	11
18"	18.00	23.0	LS-500	16
20"	20.00	25.0	LS-500	18
22"	22.00	27.0	LS-500	19
24"	24.00	29.0	LS-500	21
26"	26.00	31.0	LS-500	23
28"	28.00	33.0	LS-500	24
30"	30.00	35.0	LS-500	26
32"	32.00	37.0	LS-500	28
34"	34.00	39.0	LS-500	29
36"	36.00	41.0	LS-500	30

6 PIPE SEAL TO WALL / FLOOR

NO SCALE

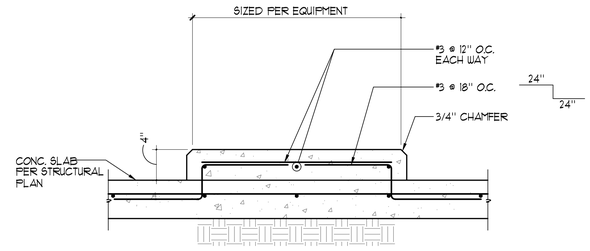

7 TYPICAL MECHANICAL PAD

1 1/2"=1'-0"

AGENCY

REVIEWED FOR CODE COMPLIANCE BY: WILLDAN ENGINEERING

Approval of these plans & specifications shall not be construed to be a permit for, or an approval of any violation of any Federal, State, County or City laws or ordinances. One set of approved plans must be kept on the job until completion.

9:22:11 AM Jul 21, 2025

FLEWELLING & MOODY
architects *for* education

HEADQUARTERS OFFICE:
815 Colorado Blvd. Suite 200
Los Angeles, California 90041
323.543.8300 fax 323.543.8198
E-Mail: fm-losangeles@flewelling-moody.com

ANTELOPE VALLEY OFFICE:
1035 West Lancaster Bouldvard
Lancaster, California 93534
661.949.0771 FAX 661.949.2843
E-Mail: fm-lancaster@flewelling-moody.com

An Employee Owned Corporation

ARCHITECT

LICENSED ARCHITECT GREGORY S. [illegible] No. C-35802 REN. 07/31/27 STATE OF CALIFORNIA

CONSULTANT

AQUATIC DESIGN GROUP
2226 Faraday Ave. Carlsbad, CA 92008
AquaticDesignGroup.com
760.438.8400

Drawn by:

Check by:

Revisions

No.	Date	Description

All dimensions must be checked at the job by the contractor who accepts full responsibility for their accuracy under the contract. These plans & the specifications in connection therewith have been prepared for a specific site. Any and all responsibility for their use in whole or in part on any other site is hereby disclaimed by Flewelling & Moody.

CITY OF RIDGECREST

SGT. JOHN PINNEY MEMORIAL POOL REPLACEMENT

205 S WARNER ST, RIDGECREST, CA 93555

Drawing Title

DETAILS

Job No. 3055-0100

Sheet No. MR-5

Date 9/25/2006

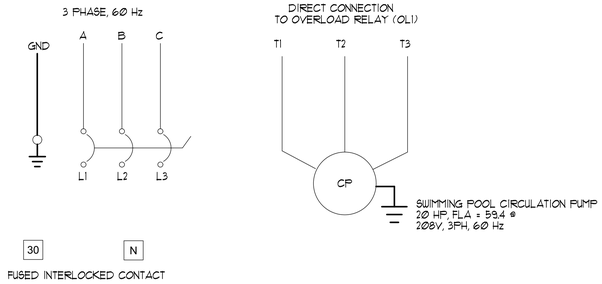



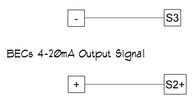

1 'SPCS' EKO-FLEX FIELD CONNECTION DIAGRAM NO SCALE

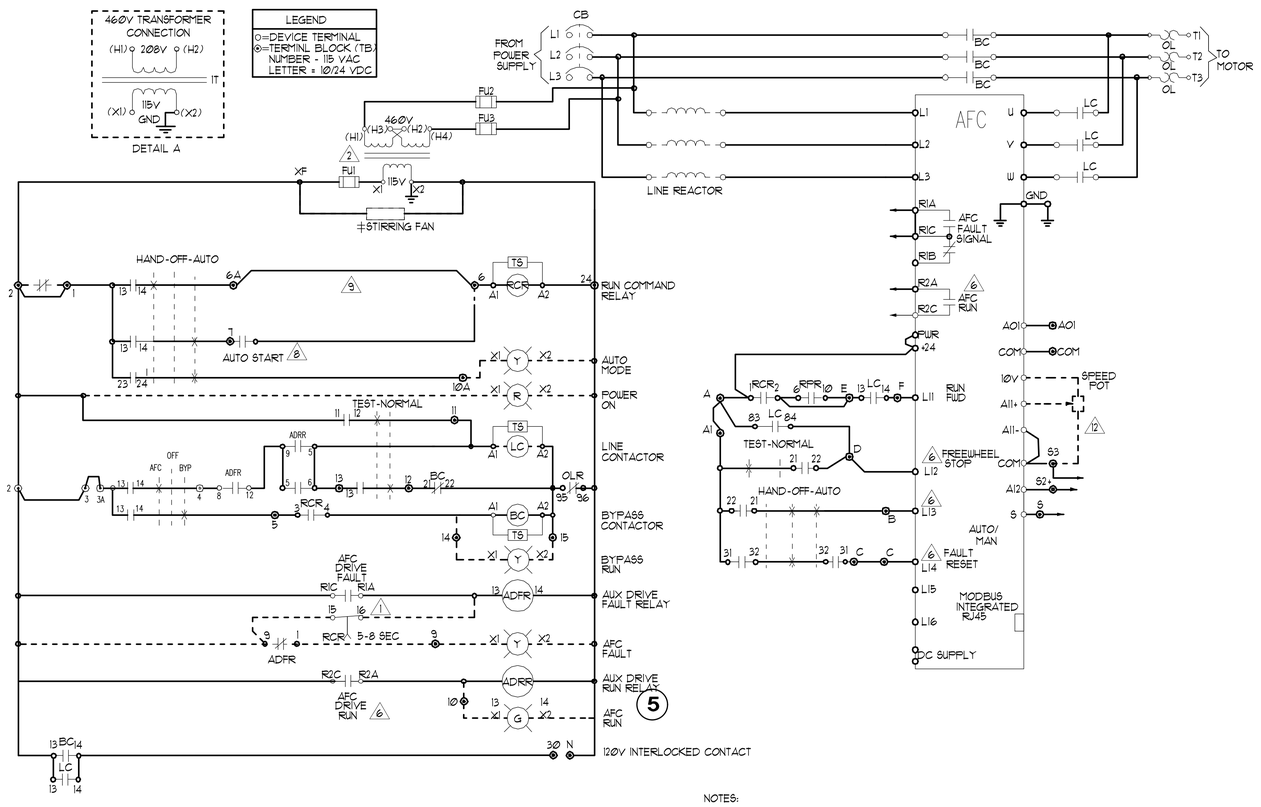

NOTES:

1. RCR TIMED CONTACT USED ONLY IF LINE CONTACTOR IS SUPPLIED
2. CONTROL TRANSFORMER SHOWN FOR 460V PRIMARY. FOR 230V PRIMARY, JUMPER H2-H3 IS REMOVED AND JUMPERS H1-H3, AND H2-H4 ARE INSTALLED. FOR 208V PRIMARY, REFER TO DETAIL A.
6. PROGRAMMED I/O SEE CONTROLLER FUNCTION CONFIGURATION TABLE.
8. BECs RUN COMMAND RELAY (BRCR)
9. JUMPER USED WHEN START-STOP PUSH BUTTONS NOT USED.

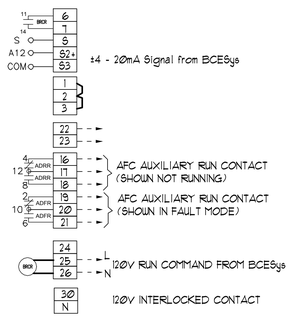

EKO-FLEX ATV61 FACTORY CONFIGURATION					
MENU	No	SUB-MENU	DESCRIPTION	CODE	ADJ.
SIM	I.1	----	2/3 WIRE CONTROL	tCC	2C
SIM	I.1	----	PUMPS FANS	CFG	FnF
SIM	I.1	----	STANDARD MOT. FREQ (HZ)	bFr	60
SIM	I.1	----	ACCELERATION (SEC)	ACC	10
SIM	I.1	----	DECELERATION (SEC)	dEC	10
SIM	I.1	----	LOW SPEED (HZ)	LSP	3
SIM	I.3	----	SWITCHING FREQ. (HZ)	SCr	8
I - O	I.5	----	2 WIRE TYPE	tCt	LEL
I - O	I.5	AI2 CONFIG.	AI2 MIN. VALUE (mA)	Cr12	4
I - O	I.5	R2 CONFIG.	R2 ASSIGN - DRIVE RUNNING	r2C	rUn
CtL	I.6	----	REF. 1 CHAN	FR1	HMI
CtL	I.6	----		FR1	AI1
CtL	I.6	----	PROFILE	CHCF	SEP
FUn	I.7	STOP CONFIG.	FREEWHEEL STOP ASSIGN	nST	LI2
FUn	I.7	REFERENCE SWITCH	REF. 1B SWITCHING	rCb	LI3
FUn	I.7	REFERENCE SWITCH	REF. 1B CHAN	Frb	AI2
FLt	I.8	FAULT RESET	FAULT RESET	rSF	LI4
FLt	I.8	CATCH ON THE FLY	CATCH ON THE FLY	FLR	YES
FLt	I.8	OUTPUT PHASE LOSS	OUTPHASE LOSS	OPL	NO
COM	I.9	FORCED LOCAL	FORCED LOCAL ASSIGN.	FLt	LI4

DESCRIPTION	TYPE 1	TYPE 12K	TYPE 3R
⏚ STIRRING FANS	10-100 HP 460V, 7.5-50HP 208/230V	10-100 HP 460V, 7.5-50HP 208/230V	NA
⏚ VENTILIATION FAN	NA	NA	ALL HP
⏚ SPACE HEATER	NA	NA	ALL HP

2 VARIABLE FREQUENCY DRIVE SYSTEM SCHEMATIC NO SCALE

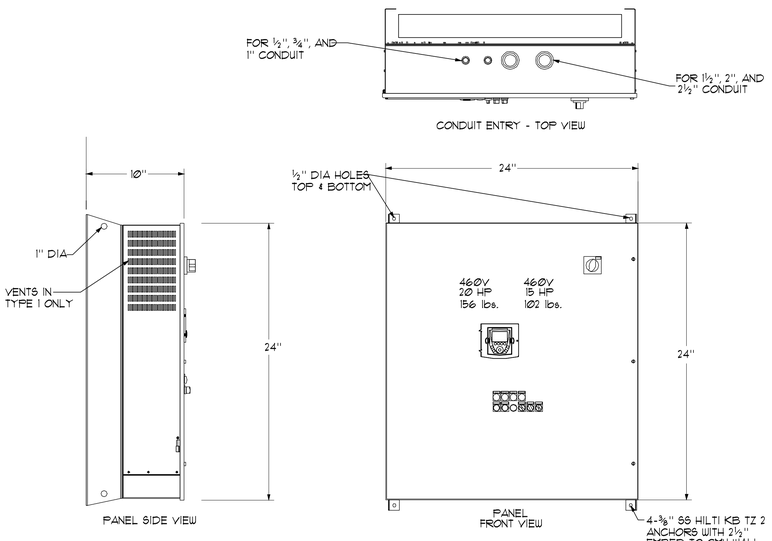

'SPCS' EKO-FLEX DRIVE TABLE

HP	HP	DIMENSIONS		
460V	208/230V	H	W	D
5-10	5	19.1"	4.33"	9.63"
15 TO 25	7.5 TO 15	18.9"	8.27"	10.23"
30 TO 40	20	25.6"	9.53"	10.23"
50	25 TO 40	26.9"	10.7"	12.2"
N/A	50	30.2"	13.5"	13"

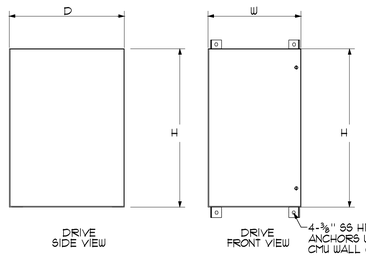

NOTE:
PROVIDE AT LEAST 3" OF MOUNTING CLEARANCE ON EACH SIDE OF THE DRIVE CONTROLLER.
PROVIDE AT LEAST 6" OF MOUNTING CLEARANCE ON EACH TOP AND BOTTOM OF THE DRIVE CONTROLLER

3 'SPCS' EKO-FLEX ENCLOSURE DIMENSIONS NO SCALE

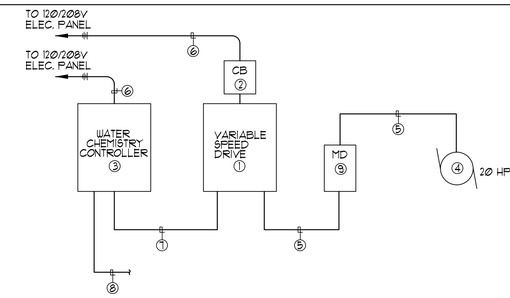

NOTES:

1. VARIABLE SPEED DRIVE MOTOR CONTROL CABINET, SEE PLANS AND SPECIFICATIONS.
2. ENCLOSED CIRCUIT BREAKER, SEE SINGLE LINE DIAGRAM.
3. WATER CHEMISTRY/FILTER CONTROL UNIT, SEE PLANS.
4. CONNECT TO CIRCULATION PUMP MOTOR, SEE PLANS.
5. MOTOR FEEDERS, SEESINGLE LINE DIAGRAM.
6. 120 VOLT BRANCH CIRCUITS, SEE PLANS.
7. ¾"C, (4) #12, (1) #12 GND. (120 VOLT CONTROL WIRING)
8. 24 VOLT SIGNAL AND SENSOR CABLING, SEE SPECIFICATIONS AND INSTALLATION INSTRUCTIONS FOR ADDITIONAL REQUIREMENTS.
9. MOTOR DISCONNECT, SEE PLANS.

4 TYPICAL WIRING SCHEMATIC AT SPCS UNIT NO SCALE

AGENCY

REVIEWED FOR CODE COMPLIANCE BY: WILLDAN ENGINEERING

Approval of these plans & specifications shall not be construed to be a permit for, or an approval of any violation of any Federal, State, County or City laws or ordinances. One set of approved plans must be kept on the job until completion.

9:22:11 AM Jul 21, 2025

FLEWELLING & MOODY
architects *for* education

HEADQUARTERS OFFICE:
815 Colorado Blvd. Suite 200
Los Angeles, California 90041
323.543.8300 fax 323.543.8198
E-Mail: fm-losangeles@flewelling-moody.com

ANTELOPE VALLEY OFFICE:
1035 West Lancaster Bouldvard
Lancaster, California 93534
661.949.0771 FAX 661.949.2843
E-Mail: fm-lancaster@flewelling-moody.com

An Employee Owned Corporation

ARCHITECT

LICENSED ARCHITECT GREGORY S. [illegible] C-35802 REN. 07/31/27 STATE OF CALIFORNIA

CONSULTANT

AQUATIC DESIGN GROUP
2226 Faraday Ave. Carlsbad, CA 92008
AquaticDesignGroup.com
760.438.8400

Drawn by:

Check by:

Revisions

No.	Date	Description

All dimensions must be checked at the job by the contractor who accepts full responsibility for their accuracy under the contract. These plans & the specifications in connection therewith have been prepared for a specific site. Any and all responsibility for their use in whole or in part on any other site is hereby disclaimed by Flewelling & Moody.

CITY OF RIDGECREST

SGT. JOHN PINNEY MEMORIAL POOL REPLACEMENT

205 S WARNER ST, RIDGECREST, CA 93555

Drawing Title

DETAILS

Job No. 3055-0100

Sheet No. MR-6

Date 9/25/2006

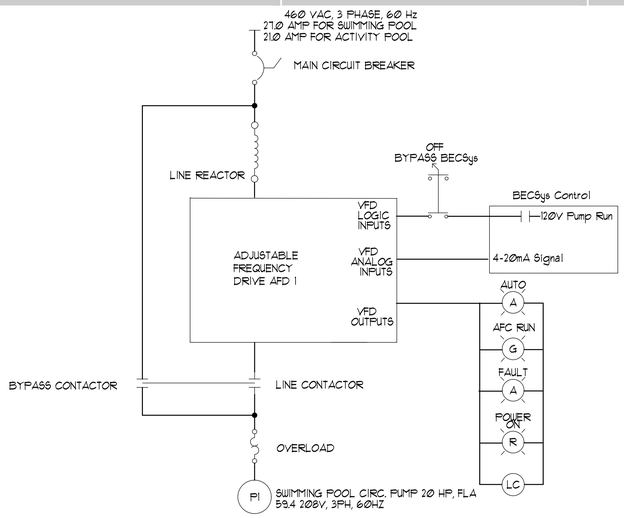

1 'SPCS' EKO-FLEX SINGLE LINE DIAGRAM

NO SCALE

DESIGNATION: 'SP' — VOLTAGE: 120/208V 3PH 4W; 200AMP ☒MAIN BREAKER ☐MAIN LUG; ☐RECESSED ☒SURFACE; LOCATION: MECHANICAL EQUIP. RM.; MINIMUM DEVICE A.I.C. RATING ☒10,000 ☐14,000; PANELBOARD KEY NOTES ① ○ ○ ○

DESCRIPTION:	C/B	CIR NO.	φ A	φ B	φ C	CIR NO.	C/B	DESCRIPTION:
CP UNDERWATER LIGHTS	① 20/1	1	435			2	20/1	CP FILTER AFC
		3	1200			4		CP FILTER PRESS AMP
		5		348		6		CP WATER CHEM CONTROL
		7	348	1200	435	8		CP WATER CHEM RELAY
AP/IP UNDERWATER LIGHTS		9	360		1200	10		CP CIRC PUMP INTERCON
CP DECK RECEPTACLES		11		348		12		CP CIRC PUMP MTR CONTROL
		13	720	360	522	14		CP HEATER
AP DECK RECEPTACLES		15	1440		360	16		CP HEATER
CP SCOREBOARD		17		720		18		CP FILTER PRIORITY VALVE
		19	720	1440	720	20		AP FILTER AFC
		21	1200		720	22		AP FILTER PRESS AMP
		23		720		24		AP WATER CHEM CONTROL
		25	720	1200	720	26		AP WATER CHEM RELAY
		27	360		1200	28		AP CIRC PUMP INTERCON
		29		720		30		AP CIRC PUMP MTR CONTROL
		31	720	360	720	32		AP HEATER
CP CO2 FEED	20/2	33	1440		360	34		CP CHLORINE FEED
		35		1056		36		AP CHLORINE FEED
AP CO2 FEED	20/2	37	1056	960	1056	38		CO2 ALARM
		39	720		960	40		SPARES ①
CO2 HEATER	20/1	41		1056	720	42		
TOTAL PER PHASE			11,439	11,208	10,653	13135 ÷ 120V = 110 AMPS		
+ 25% L.C.L.			1,696	1,494	1,829			
TOTAL			13,135	12,702	12,452			

① GFI CIRCUIT

CP = COMPETITION POOL
AP = ACTIVITY POOL

2 ELECTRICAL PANEL 'SP'

DESIGNATION: 'SP1' — VOLTAGE: 120/208V 3PH 4W; 250AMP ☒MAIN BREAKER ☐MAIN LUG; ☐RECESSED ☒SURFACE; LOCATION: MECHANICAL EQUIP. RM.; MINIMUM DEVICE A.I.C. RATING ☒10,000 ☐14,000; PANELBOARD KEY NOTES ① ○ ○ ○

DESCRIPTION:	C/B	CIR NO.	φ A	φ B	φ C	CIR NO.	C/B	DESCRIPTION:
IP FILTER AFC	20/1	1	1200			2	20/1	IP CO2 FEED
IP FILTER PRESS AMP		3	1056			4	2	1 HP
IP WATER CHEM CONTROL		5		1200		6	20/1	IP CHLORINE FEED
IP WATER CHEM RELAY		7	360	1056	1200	8		AP U.V. SYSTEM
IP CIRC PUMP INTERCONN		9	1500	360	960	10		AP/IP WLC
IP CIRC MTR CONTROL		11		960	360	12		IP HEATER
SPARES ①		13	720		1440	14	100/2	COMP. POOL CIRC PUMP
		15	7128	720		16		20 HP
		17		7128	720	18	3	
SPACE		19	2904		7128	20	30/3	ACTIVITY POOL CIRC PUMP
		21		2904		22		7.5 HP
		23			2904	24	3	
		25	2904			26	30/3	ACTIVITY POOL BOOSTER PUMP
		27		2904		28		7.5 HP
		29			2904	30	3	
		31	2004			32	30/3	INSTRUCTIONAL POOL CIRC PUMP
		33		2004		34		5 HP
		35			2004	36	3	
		37				38		SPACE
		39				40		
		41				42		
TOTAL PER PHASE			19,776	19,236	19,620	24,456 ÷ 120V = 204 AMPS		
+ 25% L.C.L.			4,680	4,245	4,305			
TOTAL			24,456	23,481	23,925			

① GFI CIRCUIT

IP = INSTRUCTIONAL POOL
AP = ACTIVITY POOL
CP = COMPETITION POOL

3 ELECTRICAL PANEL 'SP1'

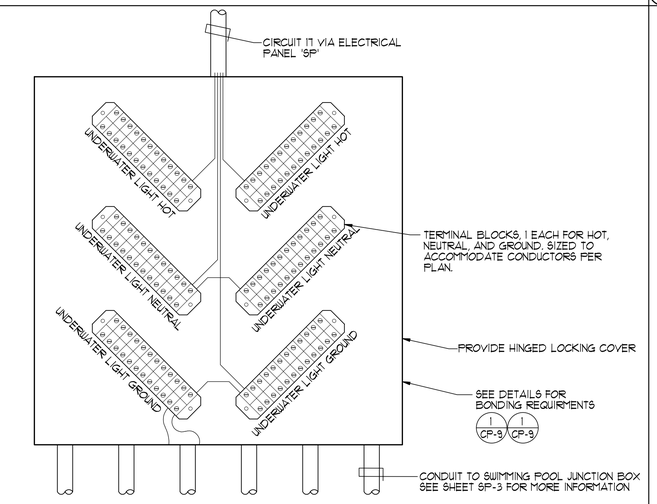

4 UNDERWATER LIGHT CONTACTOR PANEL

NO SCALE

CHEMICAL CLASSIFICATION TABLE

COMMON NAME	CHEMICAL NAME	% COMP.	CAS #	FORM	QUANT. STORED	QUANT. IN USE (OPEN/ CLOSED)	LOCATION (STORAGE & USE)	HAZ. CLASSES	JUSTIFICATION
SODIUM HYPOCHLORITE	SODIUM HYPOCHLORITE	12.5%	7681-52-9	LIQUID	0 GAL.	1,000 GAL. (CLOSED)	CHEM. ROOM	CORROSIVE LIQUID	MSDS
MURIATIC ACID	HYDROCHLORIC ACID	25%	7647-01-0	LIQUID	0 GAL.	350 GAL. (CLOSED)	CHEM. ROOM	CORROSIVE LIQUID	MSDS
CARBON DIOXIDE	CARBON DIOXIDE	100%	124-39-9	LIQUID	0 lbs.	600 lbs.	CHEM. ROOM	CRYOGENIC	MSDS

QUANTITIES OF CHEMICALS DO NOT EXCEED THE QUANTITIES LISTED IN CFC TABLE 5003.1.1(2), AND CBC TABLE 307.1.1(2) FOOTNOTE 'e' QUANTITIES SHALL BE INCREASED 100 PERCENT IN BUILDINGS WITH APPROVED AUTOMATIC SPRINKLER SYSTEM.

FOR CARBON DIOXIDE GAS SEE TABLE 1128.1(b) OF THE NFPA. 6,000 FT^3 ALLOWABLE OR 686 lbs. STORAGE PER CONTAINED AREA PROVIDE HARD WIRED CO_2 DETECTOR 'ANALOX SENSOR TECHNOLOGY' MODEL #AP1 KIT SENSOR AND STROBE UNITS 120V HARD WIRED W/ STROBE LIGHT AND AUDIBLE ALARM. SENSOR MOUNTED 18 INCHES AFF. AND ALARM LEVEL BETWEEN 10-16 INCHES AND WITHIN VISIBLE EYESIGHT OF DOOR TO BE SET TO DETECT CO_2 GAS IN LEVELS IN EXCESS OF THE PEL. PROVIDE IN EACH ROOM CONTAINING CO_2.

RATING EXPLANATION GUIDE

RATING	HEALTH HAZARD	FLAMMABILITY HAZARD	REACTIVITY HAZARD	SPECIFIC HAZARD	
4	CAN BE LETHAL	EXTREMELY FLAMMABLE. IGNITES AT BELOW 73° F.	MAY EXPLODE AT NORMAL TEMPERATURES AND PRESSURES	OXIDIZER:	OX
				ACID:	ACID
3	CAN CAUSE SERIOUS OR PERMANENT INJURY	IGNITES AT ABOVE 73° F, BELOW 100° F.	MAY EXPLODE AT HIGH TEMPERATURES OR SHOCK	CORROSIVE:	COR
2	CAN CAUSE TEMPORARY INCAPACITATION OR RESIDUAL INJURY	IGNITES AT ABOVE 100° F, BELOW 200° F.	VIOLENT CHEMICAL CHANGE AT HIGH TEMPERATURES OR PRESSURES	ALKALI:	ALK
				USE NO WATER:	-W-
1	CAN CAUSE SIGNIFICANT IRRITATION	IGNITES AT ABOVE 200° F.	NORMALLY STABLE. HIGH TEMPERATURES MAKE UNSTABLE	RADIATION HAZARDS:	☢
				POLYMERIZES:	P
0	NO HAZARD	WILL NOT BURN	STABLE		

NOTES:

1. CONFIRM SIGNAGE WITH LOCAL FIRE MARSHALL AND/OR BUILDING CODES PRIOR TO INSTALLATION. SIGNS SHALL CONFORM TO NFPA 704.
2. SIGNS SHALL BE SIZES AND COLORS PER CODE MOUNTED AT +60" A.F.F. ON DOORS AT CHEMICAL ROOMS.

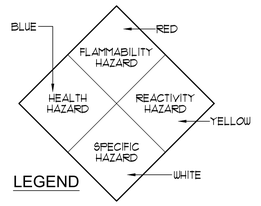

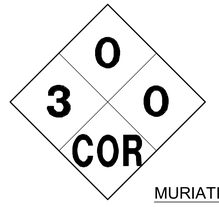

MURIATIC ACID

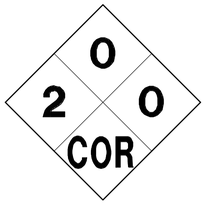

SODIUM HYPOCHLORITE

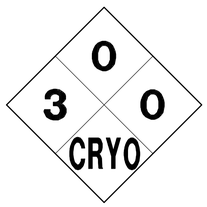

CARBON DIOXIDE

5 HAZARDOUS INFORMATION SIGNAGE

NO SCALE

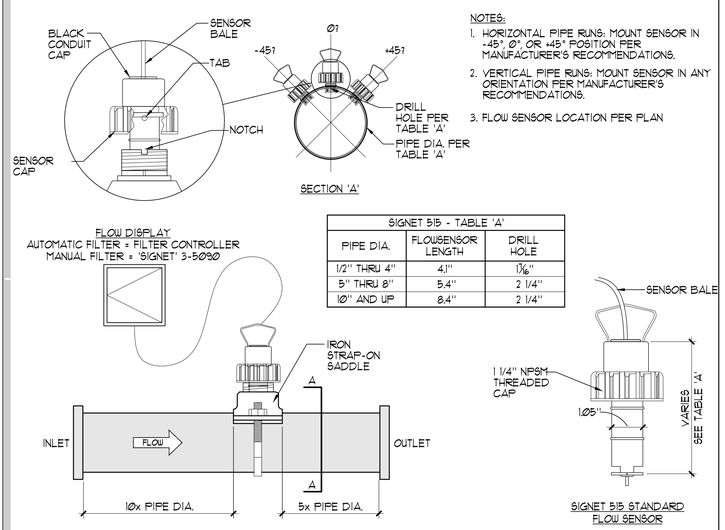

SIGNET 515 - TABLE 'A'		
PIPE DIA.	FLOWSENSOR LENGTH	DRILL HOLE
1/2" THRU 4"	4.1"	1⅞"
5" THRU 8"	5.4"	2 1/4"
10" AND UP	8.4"	2 1/4"

6 SIGNET FLOWMETER

NO SCALE

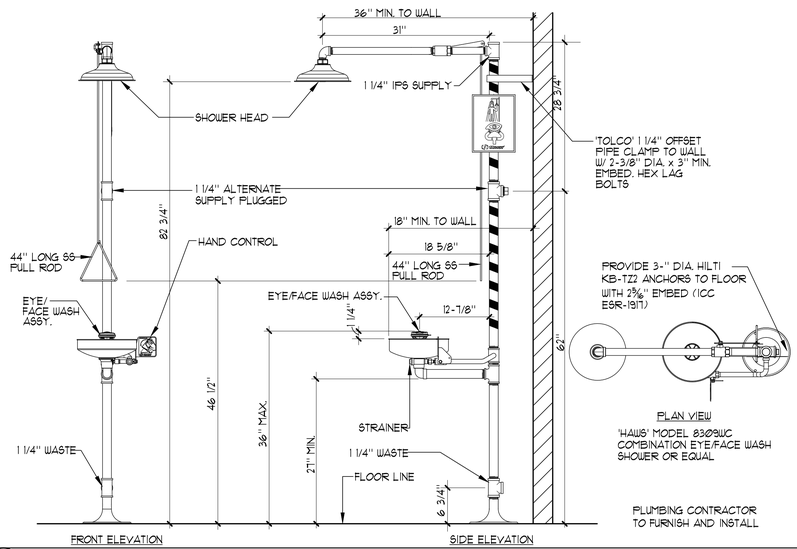

7 EYEWASH/SHOWER STATION

NO SCALE

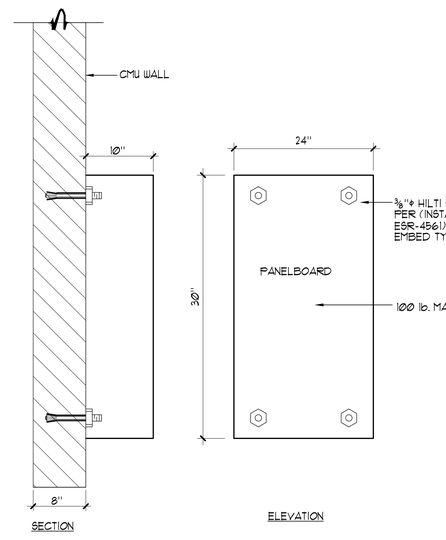

8 PANELBOARD MOUNTING DETAIL

NO SCALE

AGENCY

REVIEWED FOR CODE COMPLIANCE BY: WILLDAN ENGINEERING

Approval of these plans & specifications shall not be construed to be a permit for, or an approval of any violation of any Federal, State, County or City laws or ordinances. One set of approved plans must be kept on the job until completion.

9:22:11 AM Jul 21, 2025

FLEWELLING & MOODY
architects *for* education

HEADQUARTERS OFFICE:
815 Colorado Blvd. Suite 200
Los Angeles, California 90041
323.543.8300 fax 323.543.8198
E-Mail: fm-losangeles@flewelling-moody.com

ANTELOPE VALLEY OFFICE:
1035 West Lancaster Bouldvard
Lancaster, California 93534
661.949.0771 FAX 661.949.2843
E-Mail: fm-lancaster@flewelling-moody.com

An Employee Owned Corporation

ARCHITECT
LICENSED ARCHITECT GREGORY S. [illegible] No. C-35802 REN. 07/31/27 STATE OF CALIFORNIA

CONSULTANT
AQUATIC DESIGN GROUP
2226 Faraday Ave. Carlsbad, CA 92008
AquaticDesignGroup.com
760.438.8400

Drawn by:

Check by:

Revisions

No.	Date	Description

All dimensions must be checked at the job by the contractor who accepts full responsibility for their accuracy under the contract. These plans & the specifications in connection therewith have been prepared for a specific site. Any and all responsibility for their use in whole or in part on any other site is hereby disclaimed by Flewelling & Moody.

CITY OF RIDGECREST

SGT. JOHN PINNEY MEMORIAL POOL REPLACEMENT

205 S WARNER ST, RIDGECREST, CA 93555

Drawing Title

DETAILS

Job No. 3055-0100

Date 9/25/2006

Sheet No. **MR-7**

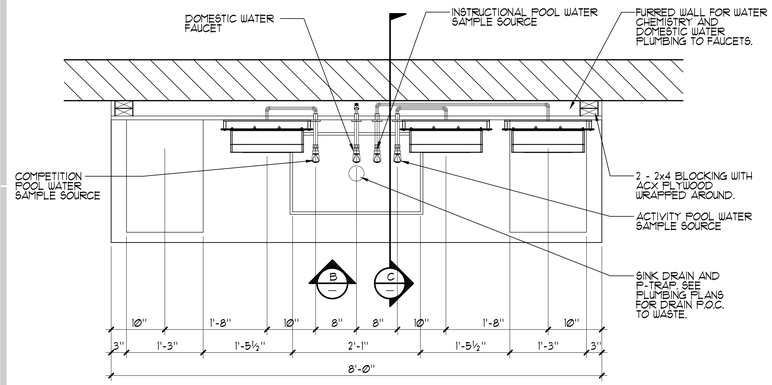

A **PLAN VIEW**

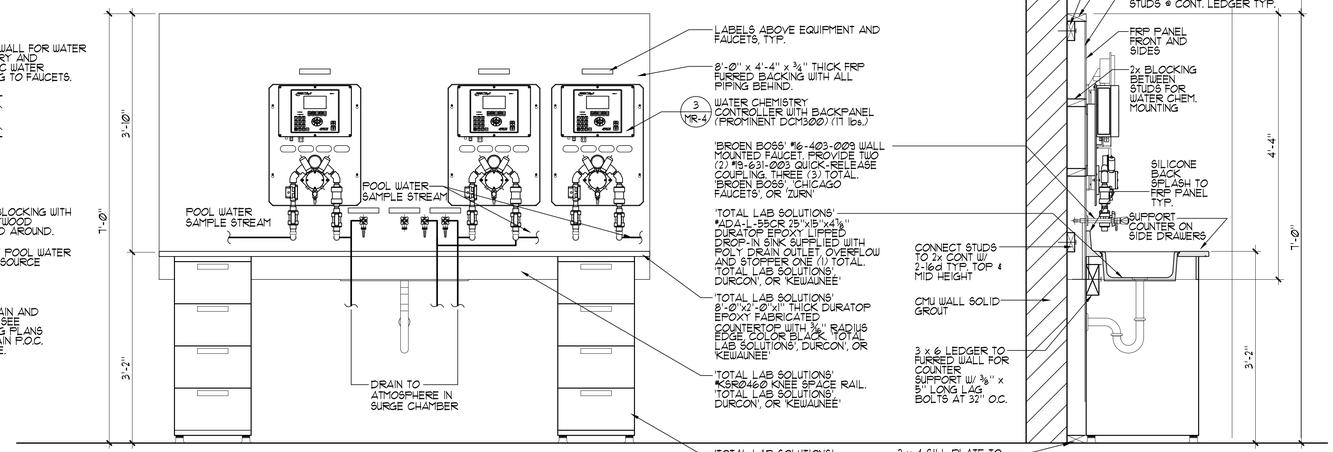

B **FRONT ELEVATION**

C **SIDE SECTION**

1 POOL OPERATOR WORKSTATION DESK

1"=1'-Ø"

2 **PANEL SUPPORT AT GUARDRAIL DETAIL** NO SCALE

3 **VARIABLE FREQUENCY DRIVE PANEL** NO SCALE

AGENCY

REVIEWED FOR CODE COMPLIANCE BY: WILLDAN ENGINEERING

Approval of these plans & specifications shall not be construed to be a permit for, or an approval of any violation of any Federal, State, County or City laws or ordinances. One set of approved plans must be kept on the job until completion.

9:22:11 AM Jul 21, 2025

FLEWELLING & MOODY
architects *for* education

HEADQUARTERS OFFICE:
815 Colorado Blvd. Suite 200
Los Angeles, California 90041
323.543.8300 fax 323.543.8198
E-Mail: fm-losangeles@flewelling-moody.com

ANTELOPE VALLEY OFFICE:
1035 West Lancaster Bouldvard
Lancaster, California 93534
661.949.0771 FAX 661.949.2843
E-Mail: fm-lancaster@flewelling-moody.com

An Employee Owned Corporation

ARCHITECT

LICENSED ARCHITECT GREGORY S. ... 35802 REN. 07/31/27 STATE OF CALIFORNIA

CONSULTANT

AQUATIC DESIGN GROUP
2226 Faraday Ave. Carlsbad, CA 92008
AquaticDesignGroup.com
760.438.8400

Drawn by:

Check by:

Revisions

No.	Date	Description

All dimensions must be checked at the job by the contractor who accepts full responsibility for their accuracy under the contract. These plans & the specifications in connection therewith have been prepared for a specific site. Any and all responsibility for their use in whole or in part on any other site is hereby disclaimed by Flewelling & Moody.

CITY OF RIDGECREST

SGT. JOHN PINNEY MEMORIAL POOL REPLACEMENT

205 S WARNER ST, RIDGECREST, CA 93555

Drawing Title

DETAILS

Job No. 3055-0100

Date 9/25/2006

Sheet No. **MR-8**

ABBREVIATIONS:

AB	ANCHOR BOLT
ABV	ABOVE
ADDTL	ADDITIONAL
ADHES	ADHESIVE
ADJ	ADJACENT
ALT	ALTERNATE
AMP	AMPLITUDE
ARCH	ARCHITECT/ ARCHITECTURAL
AVG	AVERAGE
BF	BOUNDARY FASTENER
BLDG	BUILDING
BLKG	BLOCKING
BLW	BELOW
BM	BEAM
BN	BOUNDARY NAILING
BOTT	BOTTOM
BS	BOTH SIDES
BSMT	BASEMENT
BTWN	BETWEEN
BYND	BEYOND
CF	CUBIC FOOT
CIP	CAST IN PLACE
CJ	CONTROL JOINT/ CEILING JOIST
CL	CENTERLINE
CLG	CEILING
CLR	CLEAR
CMU	CONCRETE MASONRY UNIT
CNTRSNK	COUNTERSINK/ COUNTERSUNK
COL	COLUMN
CONC	CONCRETE
CONN	CONNECTION
CONST	CONSTRUCTION
CONT	CONTINUOUS
CONTR	CONTRACTOR
COORD	COORDINATE
CVR	COVER
DIA	DIAMETER
DIM	DIMENSION
DIR	DIRECTION
DIST	DISTANCE
DN	DEAD LOAD
DMG	DAMAGE
DO	DO OVER
DP	DEEP
DS	DRAG STRUT
DSA	DEPARTMENT OF STATE ARCHITECTS
DTL	DETAIL
DWG	DRAWING
DWL	DOWEL
(E)	EXISTING
EA	EACH
EF	EACH FACE/ EDGE FASTENER
ELEC	ELECTRICAL
ELEV	ELEVATION
EMB	EMBEDMENT
EN	EDGE NAILING
ENGR	ENGINEER
ES	EDGE SCREW
EJ	EXPANSION JOINT
EQ	EQUAL
EW	EACH WAY
EXT	EXTERIOR
FDN	FOUNDATION
FF	FINISH FLOOR/ FIELD FASTENER
FG	FINISH GRADE
FH	FULL HEIGHT
FN	FIELD NAILING
FL	FLOOR
FLG	FLANGE
FOC	FACE OF CONCRETE
FOS	FACE OF STUD
FS	FAR SIDE/ FINISHED SURFACE
FT	FOOT/FEET
FTG	FOOTING
GA	GAGE
GALV	GALVANIZED
GRND	GROUND
GRD	GRADE
GT	GIRDER TRUSS
HNGR	HANGER
HT	HEIGHT
HORIZ	HORIZONTAL
HS	HIGH STRENGTH
HSS	HOLLOW STRUCTURAL SECTION
ID	INSIDE DIAMETER
INFO	INFORMATION
INT	INTERIOR
INV	INVERTED
JT	JACK TRUSS
KP	KING POST
KSI	KIPS PER SQUARE INCH
LBS	POUNDS
LD	LONG DIRECTION
LG	LONG
LL	LIVE LOAD
LLH	LONG LEG HORIZONTAL
LLV	LONG LEG VERTICAL
LOC'S	LOCATIONS
LONG	LONGITUDINAL
LT WT	LIGHT WEIGHT
MANUF	MANUFACTURER
MAX	MAXIMUM
MB	MACHINE BOLT
MD	METAL DECK
MECH	MECHANICAL
MEP	MECH/ELEC/PLUMBING
MIN	MINIMUM
MISC	MISCELLANEOUS
MTL	METAL
(N)	NEW
NS	NEAR SIDE/NELSON STUD
NW	NORMAL WEIGHT
OC	ON CENTER
OD	OUTSIDE DIAMETER
OH	OPPOSITE HAND
ORMF	ORDINARY MOMENT FRAME
OPNG	OPENING
OPP	OPPOSITE
PERIM	PERIMETER
PERP	PERPENDICULAR
PL	PROPERTY LINE
PLF	POUNDS PER LINEAR FOOT
PLT	PLATE
PSF	POUNDS PER SQUARE FOOT
PSI	POUNDS PER SQUARE INCH
PT	PLATE TRUSS/ PRESSURE TREATED
REINF	REINFORCEMENT
REQ	REQUIRE
REQ'D	REQUIRED
R&R	REMOVE AND REPLACE
SCHED	SCHEDULE
SD	SHORT DIRECTION
SF	SQUARE FOOT
SHT	SHEET
SHTG	SHEATHING
SIM	SIMILAR
SMRF	SPECIAL MOMENT - RESISTING FRAME
SN	SOLE PLATE NAILING
SOG	SLAB ON GRADE
SPCNG	SPACING
SPEC	SPECIFICATION
SQ	SQUARE
SS	STAINLESS STEEL
STAGG	STAGGERED
STD	STANDARD
STIFF	STIFFENER
STL	STEEL
STRUCT	STRUCTURAL
SW	SHEARWALL
SWO	SHEARWALL WITH OPENING
SYM	SYMMETRICAL
THK	THICK
THRD	THREADED
T&B	TOP AND BOTTOM
TN	TOE NAILING
TOF	TOP OF FOOTING
TOP	TOP OF PODIUM
TOS	TOP OF STEEL
TL	TOP OF LEDGER
TOW	TOP OF WALL
TRANV	TRANSVERSE
TS	TUBE STEEL
TYP	TYPICAL
UNO	UNLESS NOTED OTHERWISE
VERT	VERTICAL
VIF	VERIFY IN FIELD
WF	WIDE FLANGE BEAM
W/	WITH
W/O	WITHOUT
WT	WEIGHT
WP	WORKING POINT
WWF	WELDED WIRE FABRIC
WWO	WALL W/ OPENING & OR PERFORATED SHEARWALL

SYMBOLS:

∠	ANGLE
@	AT
℄	CENTERLINE
℞	PLATE/PROPERTY LINE
#	POUNDS
Ø	DIAMETER
//	PARALLEL
d_b	BAR DIAMETER

REINFORCED CONCRETE NOTES CONT.:

29. TOLERANCE FOR REINFORCEMENT AND CONCRETE LOCATION SHALL BE PER ACI 117.
30. TOLERANCE FOR LONGITUDINAL LOCATION OF BEND AND ENDS OF REINFORCEMENT SHALL BE ± 2 IN., EXCEPT THE TOLERANCE SHALL BE ± ½ IN. AT THE DISCONTINUOUS ENDS OF BRACKETS AND CORBELS, AND ± 1 IN. AT THE DISCONTINUOUS ENDS OF OTHER MEMBERS.
31. REINFORCEMENT RESISTING EARTHQUAKE-INDUCED FLEXURAL AND AXIAL FORCES IN FRAME MEMBERS AND IN STRUCTURAL WALL BOUNDARY ELEMENTS SHALL COMPLY WITH ASTM A 706. ASTM A 615 GRADE 60 REINFORCEMENT SHALL BE PERMITTED IN THESE MEMBERS IF:
    A. THE ACTUAL YIELD STRENGTH BASED ON MILL TESTS DOES NOT EXCEED fy BY MORE THAN 18,000 PSI (RETESTS SHALL NOT EXCEED THIS VALUE BY MORE THAN AN ADDITIONAL 3000 PSI); AND
    B. THE RATIO OF THE ACTUAL TENSILE STRENGTH TO THE ACTUAL YIELD STRENGTH IS NOT LESS THAN 1.25.THE VALUE OF fy FOR TRANSVERSE REINFORCEMENT INCLUDING SPIRAL REINFORCEMENT SHALL NOT EXCEED 60,000 PSI.
32. CONCRETE FLOOR FLATNESS SHALL BE A MINIMUM OF ¼" : 10 FT. TYP. U.N.O.
33. WHERE CORROSION-RESISTANT REINFORCEMENT (CRR) IS SPECIFIED, USE MMFX2 REBAR ASTM A1035 GRADES 690 AND 830.
34. WELDING OF ELECTRICAL CONDUCTORS TO REINFORCING STEEL IS PROHIBITED WITHOUT THE APPROVAL OF THE ENGINEER OF RECORD.
35. PERFORMANCE OF SHOTCRETE SHALL BE PER ACI 506.2 SPECIFICATIONS
36. ACI 318 TABLE 26.4.1.1.1(a) - SPECIFICATIONS FOR CEMENTITIOUS MATERIALS.

CEMENTITIOUS MATERIALS	SPECIFICATION
PORTLAND CEMENT	ASTM C150
BLENDED HYDRAULIC CEMENTS	ASTM C595, EXCLUDING TYPE IS (>70) AND TYPE IT (S>70)
EXPANSIVE HYDRAULIC CEMENTS	ASTM C845
HYDRAULIC CEMENT	ASTM C1157
FLY ASH AND NATURAL POZZOLAN	ASTM C618
SLAG CEMENT	ASTM C989
SILICA FUME	ASTM C1240

37. AGGREGATES - COMPLIANCE REQUIREMENTS:
    A. AGGREGATES SHALL CONFORM TO (1) OR (2):
        1. NORMALWEIGHT AGGREGATE: ASTM C33.
        2. LIGHTWEIGHT AGGREGATE: ASTM C330.
    B. AGGREGATES NOT CONFORMING TO ASTM C33 OR ASTM C330 ARE PERMITTED IF THEY HAVE BEEN SHOWN BY TEST OF ACTUAL SERVICE TO PRODUCE CONCRETE OF ADEQUATE STRENGTH AND DURABILITY AND ARE APPROVED BY THE BUILDING OFFICIAL.
    C. MAXIMUM AGGREGATE SIZE:
        1. FOOTINGS.....1" MAX.
        2. SLAB ON GRADE, GRADE BEAMS.....¾" MAX.
        3. ELEVATED STRUCT. SLABS, BEAMS, FRAMED COLUMNS, WALLS.....¾" MAX.
        4. REMAINDER.....¾" MAX.
38. WATER - COMPLIANCE REQUIREMENTS:
    A. MIXING WATER SHALL CONFORM TO ASTM C1602.
    B. MIXING WATER, INCLUDING THAT PORTION OF MIXING WATER CONTRIBUTED IN THE FORM OF FREE MOISTURE ON AGGREGATES, SHALL NOT CONTAIN DELETERIOUS AMOUNTS OF CHLORIDE ION WHEN USED FOR PRESTRESSED CONCRETE, FOR CONCRETE THAT WILL CONTAIN ALUMINUM EMBEDMENTS, OR FOR CONCRETE CAST AGAINST STAY-IN-PLACE GALVANIZED STEEL FORMS.
39. ADMIXTURES - COMPLIANCE REQUIREMENTS:
    A. ADMIXTURES SHALL CONFORM TO (1) THROUGH (4):
        1. WATER REDUCTION AND SETTING TIME MODIFICATION: ASTM C494.
        2. PRODUCTION FLOWING CONCRETE: ASTM C1017.
        3. AIR ENTRAINMENT: ASTM C260.
        4. INHIBITING CHLORIDE-INDUCED CORROSION: ASTM C1582.
    B. ADMIXTURES THAT DO NOT CONFORM TO THESE SPECIFICATIONS SHALL BE SUBJECT TO PRIOR REVIEW BY THE LICENSED DESIGN PROFESSIONAL.
    C. CALCIUM CHLORIDE OR ADMIXTURES CONTAINING CHLORIDE FROM SOURCES OTHER THAN IMPURITIES IN ADMIXTURE INGREDIENTS SHALL NOT BE USED IN PRESTRESSED CONCRETE, IN CONCRETE CONTAINING EMBEDDED ALUMINUM, OR IN CONCRETE CAST AGAINST STAY-IN-PLACE GALVANIZED STEEL FORMS.
    D. ADMIXTURES USED IN CONCRETE CONTAINING EXPANSIVE CEMENTS CONFORMING TO ASTM C845 SHALL BE COMPATIBLE WITH THE CEMENT AND PRODUCE NO DELETERIOUS EFFECTS.
40. STEEL FIBER REINFORCEMENT - COMPLIANCE REQUIREMENTS:
    A. STEEL FIBER REINFORCEMENT USED FOR SHEAR RESISTANCE SHALL SATISFY (1) AND (2):
        1. BE DEFORMED AND CONFORM TO ASTM A820.
        2. HAVE A LENGTH-TO-DIAMETER RATIO OF AT LEAST 50 AND NOT EXCEEDING 100.
41. COVER THICKNESS FOR REINFORCED CONCRETE FLOOR OR ROOF SLABS (INCHES)

FIRE-RESISTING RATING (HOURS)									
INTERIOR SPAN					END SPAN				
1 HR	1½ HR	2 HR	3 HR	4 HR	1 HR	1½ HR	2 HR	3 HR	4 HR
¾	¾	¾	¾	¾	¾	¾	1	1¼	1½

42. COVER THICKNESS FOR PRE-STRESSED CONCRETE FLOOR OR ROOF SLABS (INCHES)

FIRE-RESISTING RATING (HOURS)									
INTERIOR SPAN					END SPAN				
1 HR	1½ HR	2 HR	3 HR	4 HR	1 HR	1½ HR	2 HR	3 HR	4 HR
¾	¾	¾	¾	¾	1⅛	1½	1¾	2⅛	2¾

43. MINIMUM COVER FOR MAIN REINFORCING BARS OF REINFORCED CONCRETE BEAMS[b] (APPLICABLE TO ALL TYPES OF STRUCTURAL CONCRETE)

BEAM WIDTH[a] (inches)	FIRE-RESISTING RATING (HOURS)				
	1 HR	1½ HR	2 HR	3 HR	4 HR
5	¾	1	1¼	-	-
7	¾	¾	¾	1¾	3
≥ 10	¾	¾	¾	1	1¾

S1: 1 INCH = 25.4mm 1 FOOT = 304.8mm
a. FOR BEAM WIDTHS BETWEEN THE TABULATED VALUES,THE MINIMUM COVER THICKNESS CAN BE DETERMINED BY DIRECT INTERPOLATION.
b. THE COVER FOR AN INDIVIDUAL REINFORCING BAR IS THE MINIMUM THICKNESS OF CONCRETE BETWEEN THE SURFACE OF THE BAR AND THE FIRE-EXPOSED SURFACE OF THE BEAM. FOR BEAMS IN WHICH SEVERAL BARS ARE USED, THE COVER FOR THE CORNER BARS USED IN THE CALCULATION SHALL BE REDUCED TO ONE-HALF OF THE ACTUAL VALUE. THE COVER FOR AN INDIVIDUAL BAR MUST BE NOT LESS THAN ONE-HALF OF THE VALUE GIVEN IN TABLE 722.2.2 (3) NOR LESS THAN ¾ INCH.

44. TABLE 722.2.4 MINIMUM DIMENSION OF CONCRETE COLUMNS (INCHES)

FIRE-RESISTING RATING (HOURS)				
1 HR	1½ HR	2[a] HR	3[a] HR	4[b] HR
8	9	10	12	14

S1: 1 INCH = 25mm
a. THE MINIMUM DIMENSION IS PERMITTED TO BE REDUCED TO 8 INCHES FOR RECTANGULAR COLUMNS WITH TWO PARALLEL SIDES NOT LESS THAN 36 INCHES IN LENGTH.
b. THE MINIMUM DIMENSION IS PERMITTED TO BE REDUCED TO 10 INCHES FOR RECTANGULAR COLUMNS WITH TWO PARALLEL SIDES NOT LESS THAN 36 INCHES IN LENGTH.

45. 722.2.4.2 COVER FOR REINFORCED CONCRETE COLUMNS.
THE MINIMUM THICKNESS OF CONCRETE COVER TO THE MAIN LONGITUDINAL REINFORCEMENT IN COLUMNS, REGARDLESS OF THE TYPE OF AGGREGATE USED IN THE CONCRETE AND THE SPECIFIED COMPRESSIVE STRENGTH OF CONCRETE, f'_c, SHALL BE NOT LESS THAN 1 INCH (25mm) TIMES THE NUMBER OF HOURS OF REQUIRED FIRE RESISTANCE OR 2 INCHES (51mm), WHICHERVER IS LESS.

EPOXY ADHESIVE NOTES:

1. CONTINUOUS INSPECTION BY A REGISTERED DEPUTY INSPECTOR IS REQUIRED FOR ALL EPOXY ANCHOR INSTALLATIONS.
2. SIMPSON 'SET-3G' EPOXY (ICC-ES ESR-4057 CONCRETE) OR APPROVED EQUAL BY ENGINEER OF RECORD SHALL BE USED WHERE EPOXY ANCHORS ARE SPECIFIED IN CONCRETE.
3. SIMPSON 'SET-3G' EPOXY (ICC-ES ESR-4844 MASONRY) OR APPROVED EQUAL BY ENGINEER OF RECORD SHALL BE USED WHERE EPOXY ANCHORS ARE SPECIFIED IN CMU.
4. SIMPSON 'ET-HP' EPOXY (ICC-ES ESR-3638) OR DEWALT AC100+GOLD (ICC-ES ESR-4105) SHALL BE USED WHERE EPOXY ANCHORS ARE SPECIFIED IN URM.
5. SURFACE MUST BE CLEAN, SOUND AND FREE OF STANDING WATER. SURFACE MAY BE DRY OR DAMP. REMOVE ALL DIRT, LAITANCE, GREASE, CURING COMPOUND, IMPREGNATION'S OR ANY FOREIGN PARTICLES PRIOR TO PLACING EPOXY.
6. COMPLY WITH THE MANUFACTURER'S RECOMMENDATIONS FOR ALL PRODUCTS AND PROCEDURES.
7. HOLE DIAMETERS FOR PLACEMENT OF ANCHOR BOLTS, DOWELS AND PINS SHALL NOT EXTEND 1/4" GREATER THAN THE DIAMETER OF THE ANCHOR. THE DEPTH OF EMBEDMENT IS 10-15 TIMES THE BOLT DIAMETER MINIMUM, UNLESS OTHERWISE NOTED.
8. MINIMUM SUBSTRATE AND AMBIENT TEMPERATURE SHALL BE AS RECOMMENDED BY MANUFACTURER PRIOR TO PLACING EPOXY. DO NOT THIN EPOXY.
9. INSTALLATION OF ADHESIVE ANCHORS HORIZONTALLY OR UPWARDLY INCLINED TO SUPPORT SUSTAINED TENSION LOADS SHALL BE PERFORMED BY PERSONNEL CERTIFIED BY AN APPLICABLE CERTIFICATION PROGRAM. CERTIFICATION SHALL INCLUDE WRITTEN AND PERFORMANCE TESTS IN ACCORDANCE WITH THE ACI/CRSI ADHESIVE ANCHOR INSTALLER CERTIFICATION PROGRAM, OR EQUIVALENT.
10. THE REMOVAL AND RESETTING OF POST-INSTALLED MECHANICAL ANCHORS IS PROHIBITED.
11. ADHESIVE ANCHORS SHALL BE INSTALLED IN CONCRETE HAVING A MINIMUM AGE OF 21 DAYS AT TIME OF ANCHOR INSTALLATION.
12. ALL AREAS IN NEED OF EPOXY WILL NEED TO GO THROUGH THE ENGINEER FOR A FIX.

STEEL DECK (NON-COMPOSITE):

1. STEEL DECK SHALL BE MANUFACTURED BY VERCO MANUFACTURING, INC., OF THE TYPE AND GAUGE AS SHOWN ON THE DRAWING OR AN APPROVED EQUAL.
2. STEEL DECK SHALL CONFORM TO ASTM A653, SS GRADE 33 (MINIMUM) PER IAPMO UES 2018 AND SHALL BE GALVANIZED IN ACCORDANCE WITH ASTM A924 GRADE 60 COATING.
3. ATTACHMENT TO SUPPORTS AND AT SIDE LAPS SHALL BE AS SHOWN ON THE DRAWINGS.
4. DECKING CONTRACTOR SHALL SUPPLY SHOP DRAWINGS SHOWING LOCATION, GAUGE, AND SIZE OF EACH PIECE OF DECKING. SHOP DRAWINGS SHALL ALSO SHOW CLOSURE CONDITIONS, WELDS TO SUPPORTS, AND SIDE LAP DETAILS.

FOUNDATION NOTES CONT.:

13. THE GROUND IMMEDIATELY ADJACENT TO THE FOUNDATION SHALL BE SLOPED AWAY FROM THE BUILDING AT A SLOPE OF NOT LESS THAN ONE UNIT VERTICAL IN 20 UNITS HORIZONTAL (5-PERCENT SLOPE) FOR A MINIMUM DISTANCE OF 10 FEET (3048 MM) MEASURED PERPENDICULAR TO THE FACE OF THE WALL. IF PHYSICAL OBSTRUCTIONS OR LOT LINES PROHIBIT 10 FEET (3048 MM) OF HORIZONTAL DISTANCE, A 5-PERCENT SLOPE SHALL BE PROVIDED TO AN APPROVED ALTERNATIVE METHOD OF DIVERTING WATER AWAY FROM FOUNDATION. SWALES USED FOR THIS PURPOSE SHALL BE SLOPED A MINIMUM OF 2 PERCENT WHERE LOCATED WITHIN 10 FEET (3048 MM) OF THE BUILDING FOUNDATION. IMPERVIOUS SURFACES WITHIN 10 FEET (3048 MM) OF THE BUILDING FOUNDATION SHALL BE SLOPED A MINIMUM OF 2 PERCENT AWAY FROM THE BUILDING.
    EXCEPTION: WHERE CLIMATIC OR SOIL CONDITIONS WARRANT, THE SLOPE OF THE GROUND AWAY FROM THE BUILDING FOUNDATION SHALL BE PERMITTED TO BE REDUCED TO NOT LESS THAN ONE UNIT VERTICAL IN 48 UNITS HORIZONTAL (2-PERCENT SLOPE). THE PROCEDURE USED TO ESTABLISH THE FINAL GROUND LEVEL ADJACENT TO THE FOUNDATION SHALL ACCOUNT FOR ADDITIONAL SETTLEMENT OF THE BACKFILL.
14. SEE SOILS REPORT FOR ALL ALLOWABLE TEMPORARY GRADES, VERTICAL CUTS, OR OPTIONS ON SLOT CUTTING DURING CONSTRUCTION.
15. THE SOIL BEHIND RESTRAINED RETAINING WALLS CANNOT BE BACKFILLED TILL THE FLOORS USED FOR RESTRAINING ARE CURED AT LEAST 14 DAYS OR 75% OF SPECIFIED STRENGTH.

REINFORCED CONCRETE NOTES:

1. CONCRETE MIXES SHALL BE DESIGNED BY A RECOGNIZED TESTING LABORATORY AND COPIES OF THE DESIGN SHALL BE SENT TO THE ARCHITECT AND THE ENGINEER. COMPRESSIVE STRENGTH TEST REPORTS SHALL BE SUBMITTED TO THE BUILDING DEPARTMENT AND THE ARCHITECT. ALL CONCRETE EXCEPT FOUNDATION CONCRETE SHALL CONTAIN POLYMER BASED WATER REDUCING ADMIXTURE.
2. PORTLAND CEMENT SHALL CONFORM TO ASTM C-150. TYPE II. AGGREGATE FOR STONE CONCRETE SHALL CONFORM TO ASTM C-33. NON-REACTIVE AGGREGATE FOR LIGHTWEIGHT CONCRETE SHALL CONFORM ASTM C-330.
3. ALL REINFORCING BARS, ANCHOR BOLTS, PRE STRESSING TENDONS, AND ALL OTHER CONCRETE INSERTS SHALL BE WELL SECURED IN POSITION PRIOR TO PLACING CONCRETE.
4. THE MAXIMUM SLUMP SHALL NOT EXCEED 4" +/- 1" FOR FOOTINGS, SLABS ON EARTH, AND MASS CONCRETE, AND 5" +/- 1" FOR OTHER CONCRETE. SLUMP MAY BE INCREASED WHEN CHEMICAL ADMIXTURES ARE USED, PROVIDED THAT ADMIXTURE-TREATED CONCRETE HAS THE SAME OR LOWER WATER: CEMENT OR WATER: CEMENTITIOUS MATERIAL RATIO. (ACI 211 TABLE 6.3.1)
5. MINIMUM COMPRESSIVE STRENGTH:
    PROVIDE CONCRETE WITH THE FOLLOWING MINIMUM COMPRESSIVE STRENGTH (f'_c) AT 28 DAYS UNLESS NOTED OTHERWISE (MINIMUM 5 SACKS OF CEMENT PER CUBIC YARD) (MAXIMUM WATER/CEMENT RATIO BY WEIGHT SHALL BE .65 FOR BALANCE):

MINIMUM COMPRESSIVE STRENGTH (f'_c)			
CONSTRUCTION TYPE	PSI	SPEC. INSP. REQUIRED	AGGREGATE
SLAB ON GRADE	3000 PSI *	NO	NORMAL WT.
SPREAD FOOTING	3000 PSI *	NO	NORMAL WT.
CONTINUOUS FOOTINGS	3000 PSI *	NO	NORMAL WT.
POLE FOOTINGS	4000 PSI	YES	NORMAL WT.
PILASTER	4000 PSI	YES	NORMAL WT.
NOTE: * 2500 PSI STRENGTH USED FOR DESIGN, SPECIAL INSPECTION NOT REQUIRED.			

6. THE COMPRESSIVE STRENGTH OF EXTERIOR SLABS AND FLAT WORK SHALL BE INCREASED FOR MODERATE AND SEVERE WEATHERING EXPOSURE PER TABLE 1904.2.2 OF THE CBC.
7. ALL STRUCTURAL CONCRETE IS TO BE REINFORCED.
8. CONTRACTOR SHALL SUBMIT SLAB CONSTRUCTION JOINT LAYOUT DRAWINGS TO THE ARCHITECT AND ENGINEER FOR REVIEW. THE MAXIMUM SPACING OF CONTROL JOINTS IN SLAB ON GRADE EACH WAY SHALL BE 30X THE SLAB THICKNESS BEFORE 7 DAYS OF CURING. SLABS REQUIRE AT LEAST 7 DAYS CURING (14 DAYS WHERE FLY ASH OR POZOLAN IS USED), AND THE ENVIRONMENT (HUMIDITY AND TEMPERATURE) OF ROOM SHALL BE ACCLIMATED TO LONG TERM CLIMATE CONDITIONS PRIOR TO INSTALLATION OF FLOORING. THE SLAB TEMPERATURE SHALL BE WITHIN 5 DEGREES OF DEW POINT DURING CURING. ANY NOTES BELOW FOR CURING REQUIREMENTS. MOISTURE AND HUMIDITY TESTING SHALL BE PERFORMED BY AN INDEPENDENT TESTING LABORATORY HIRED BY THE OWNER, AND TESTS RESULTS SHALL BE SUBMITTED TO THE ARCHITECT FOR APPROVAL PRIOR TO INSTALLATION OF FLOORING.
9. PROJECTING CORNERS OF BEAMS, COLUMNS, WALLS, ETC.. SHALL BE FORMED WITH A 3/4" CHAMFER UNLESS DETAILED OTHERWISE.
10. IF EXPOSURE TO SULFATES, OR SPECIAL EXPOSURE CONDITIONS OCCUR, THE CONCRETE STRENGTH, WATER CEMENT RATIOS, AND OTHER PROPERTIES OF THE CONCRETE MIX SHALL BE IN ACCORDANCE WITH ACI 318 SECTION 19.3. VERIFY WITH SOILS REPORT FOR CORROSIVE CHEMICALS IN THE SOILS.
11. DO NOT POUR CONCRETE WHEN THE TEMPERATURE EXCEEDS 90°F WHEN THE WIND VELOCITY EXCEEDS 12MPH. START CURING AS SOON AS HARD TRAWLING IS DONE. WHEN WIND, TEMPERATURE AND HUMIDITY CONDITIONS CAUSE EARLY DISAPPEARANCE OF BLEED WATER, STEPS SHALL BE TAKEN TO USE A FOG SPRAY. CURING SHALL COMMENCE IMMEDIATELY AFTER FINISHING TRAWLING.
12. CURE CONCRETE ACCORDING TO ACI 308.1 BY ONE OF THE FOLLOWING METHODS:
    A. WET CURING BY USING BURLAP FOR A MINIMUM OF 7 DAYS. BURLAP MUST BE PLACED WITHIN 2 HOURS OF POURING.
    B. CURING COMPOUND MUST CONFORM TO ASTM C309. APPLY UNIFORMLY IN CONTINUOUS OPERATION BY POWER SPRAY OR ROLLER ACCORDING TO MANUFACTURE'S WRITTEN INSTRUCTION.
    C. MOISTURE RETAINING COVER SHOULD CONFORM TO ASTM C171, BE AT LEAST 0.4 MILL. THICK, AND PREFERABLE REINFORCED WITH GLASS FIBER.
13. WHERE AIR ENTRAINED CONCRETE IS SPECIFIED, THE VOLUME OF AIR IN THE MORTAR FRACTION OF CONCRETE MIX DESIGN SHALL BE 9% ±1%.
14. ALL REINFORCING STEEL SHALL CONFORM TO THE REQUIREMENTS OF ASTM A-615 GRADE 60. AT GRADE BEAMS & CONCRETE FRAMES ALL REINF. SHALL CONFORM TO ASTM A706 REBAR. U.N.O.
15. ALL REINFORCING BAR BENDS SHALL BE MADE COLD.
16. REINFORCING STEEL SHALL BE SPLICED WITH CLASS B SPLICES UNLESS NOTED OTHERWISE ON THE DRAWINGS.
17. LOW HYDROGEN ELECTRODES SHALL BE USED WHEREVER REINFORCING STEEL IS WELDED. BARS SHALL BE A706 GRD. 60 MIN. FOR WELD ABILITY.
18. AT THE TIME CONCRETE IS PLACED, REINFORCEMENT SHALL BE FREE FROM MUD, OIL, OR OTHER NONMETALLIC COATINGS THAT DECREASE BOND. WHERE SPECIFIED IN THE DETAILS, EPOXY-COATING OF STEEL REINFORCEMENT IN ACCORDANCE WITH ACI STANDARDS. EXCEPT FOR PRESTRESSING STEEL, STEEL REINFORCEMENT WITH RUST, MILL SCALE, OR A COMBINATION OF BOTH SHALL BE CONSIDERED SATISFACTORY, PROVIDED THE MINIMUM DIMENSIONS (INCLUDING HEIGHT OF DEFORMATIONS) AND WEIGHT OF A HAND-WIRE-BRUSHED TEST SPECIMEN COMPLY WITH APPLICABLE ASTM SPECIFICATIONS.
19. THE MINIMUM CLEAR SPACING BETWEEN PARALLEL BARS IN A LAYER SHALL BE d_b BUT NOT LESS THAN 1 IN. WHERE PARALLEL REINFORCEMENT IS PLACED IN TWO OR MORE LAYERS, BARS IN THE UPPER LAYERS SHALL BE PLACED DIRECTLY ABOVE BARS IN THE BOTTOM LAYER WITH CLEAR DISTANCE BETWEEN LAYERS NOT LESS THAN 1 IN. CLEAR DISTANCE LIMITATION BETWEEN BARS SHALL APPLY ALSO TO THE CLEAR DISTANCE BETWEEN A CONTACT LAP SPLICE AND ADJACENT SPLICES OR BARS.
20. IN SPIRALLY REINFORCED OR TIED REINFORCED COMPRESSION MEMBERS, CLEAR DISTANCE BETWEEN LONGITUDINAL BARS SHALL BE NOT LESS THAN 1.5d_b NOR LESS THAN 1½ IN.
21. IN WALLS AND SLABS OTHER THAN CONCRETE JOIST CONSTRUCTION, PRIMARY FLEXURAL REINFORCEMENT SHALL NOT BE SPACED FARTHER APART THAN THREE TIMES THE WALL OR SLAB THICKNESS, NOR FARTHER APART THAN 18 IN.
22. WHERE CONCRETE MUST BE INSTALLED AND CURED IN COLD WEATHER, THE GENERAL REQUIREMENTS AND SPECIFICATIONS OF ASTM STD C-31 SHALL BE IMPLEMENTED.
23. CAST-IN-PLACE CONCRETE (NON-PRESTRESSED)
    THE FOLLOWING MINIMUM CONCRETE COVER SHALL BE PROVIDED FOR REINFORCEMENT:
    A. CONCRETE CAST AGAINST AND PERMANENTLY EXPOSED TO EARTH.....3" MIN.
    B. CONCRETE EXPOSED TO EARTH OR WEATHER:
        - NO.6 THROUGH NO.18 BARS.....2" MIN.
        - NO.5 BAR, W31 OR D31 WIRE, AND SMALLER.....1½" MIN.
    C. CONCRETE NOT EXPOSED TO WEATHER OR IN CONTACT WITH GROUND:
        SLABS, WALLS, JOISTS:
        - NO.14 AND NO.18 BARS.....1½" MIN.
        - NO.11 BAR AND SMALLER.....¾" MIN.
        BEAMS, COLUMNS:
        - PRIMARY REINFORCEMENT, TIES, STIRRUPS, SPIRALS.....1½" MIN.
        SHELLS, FOLDED PLATE MEMBERS:
        - NO.6 BAR AND LARGER.....¾" MIN.
        - NO.5 BAR, W31 OR D31 WIRE, AND SMALLER.....⅝" MIN.
24. BUNDLED BARS:
    FOR BUNDLED BARS, MINIMUM CONCRETE COVER SHALL BE EQUAL TO THE EQUIVALENT DIAMETER OF THE BUNDLE, BUT NEED NOT TO BE GREATER THAN 2 IN.; EXCEPT FOR CONCRETE CAST AGAINST AND PERMANENTLY EXPOSED TO EARTH, WHERE MINIMUM COVER SHALL BE 3 IN. GROUPS OF PARALLEL REINFORCING BARS BUNDLED IN CONTACT TO ACT AS A UNIT SHALL BE LIMITED TO FOUR IN ANY ONE BUNDLE. BUNDLED BARS SHALL BE ENCLOSED WITHIN STIRRUPS OR TIES. BARS LARGER THAN NO. 11 SHALL NOT BE BUNDLED IN BEAMS. INDIVIDUAL BARS WITHIN A BUNDLE TERMINATED WITHIN THE SPAN OF FLEXURAL MEMBERS SHALL TERMINATE AT DIFFERENT POINTS WITH AT LEAST 40d_b STAGGER.
25. CORROSIVE ENVIRONMENTS:
    IN CORROSIVE ENVIRONMENTS OR OTHER SEVERE EXPOSURE CONDITIONS, AMOUNT OF CONCRETE PROTECTION SHALL BE SUITABLY INCREASED, AND DENSENESS AND NONPOROSITY OF PROTECTING CONCRETE SHALL BE CONSIDERED. OTHER PROTECTION SHALL BE PROVIDED. "COVER" WHERE NOTED ON PLANS AND DETAILS IS NOT A MINIMUM, UNLESS NOTED AS "MIN." THE COVER SHALL BE AS NOTED WITH TOLERANCE.
26. MINIMUM DIAMETER OF BEND:

MINIMUM DIAMETERS OF BEND	
BAR SIZE	MINIMUM DIAMETER
NO.3 THROUGH NO.8	6d_b
NO.9, NO.10, AND NO.11	8d_b
NO.14 AND NO.18	10d_b

27. TOLERANCE FOR d AND MINIMUM CONCRETE COVER IN FLEXURAL MEMBERS, WALLS, AND COMPRESSION MEMBERS SHALL BE AS FOLLOWS:

	TOLERANCE ON d	TOLERANCE ON MINIMUM CONCRETE COVER
$d \leq 8$ IN.	±⅜ IN.	-⅜ IN.
$d > 8$ IN.	±½ IN.	-½ IN.

    EXCEPT THAT TOLERANCE FOR THE CLEAR DISTANCE TO FORMED SOFFITS SHALL BE MINUS ¼ IN. AND TOLERANCE FOR COVER SHALL NOT EXCEED MINUS ½ THE MINIMUM CONCRETE COVER REQUIRED IN THE DESIGN DRAWINGS AND SPECIFICATIONS.
28. MAXIMUM CHLORIDE ION CONTENT FOR CORROSION PROTECTION OF REINFORCEMENT:

TYPE OF MEMBER	MAXIMUM WATER SOLUBLE CHLORIDE ION (Cl^-) IN CONCRETE, PERCENT BY WEIGHT OF CEMENT
PRESTRESSED CONCRETE	0.06
REINFORCED CONCRETE EXPOSED TO CHLORIDE IN SERVICE	0.15
REINFORCED CONCRETE THAT WILL BE DRY OR PROTECTED FROM MOISTURE IN SERVICE	1.00
OTHER REINFORCED CONCRETE CONSTRUCTION	0.30

DESIGN CRITERIA (COMMUNITY BLDG & BATHROOMS/POOL STORAGE):
(CBC 2022) BUILDING CODE

1. ROOF LIVE LOAD= 20 PSF [1603.1.2 CBC] ROOFING MATERIAL DEAD LOAD= 2.2 PSF
   ROO

STRUCTURAL STEEL:

1. STRUCTURAL STEEL:
   PROVIDE STRUCTURAL STEEL COMPLYING WITH THE FOLLOWING ASTM STANDARD SPECIFICATIONS, UNLESS NOTED OTHERWISE:
   WIDE FLANGE AND WT SECTIONS..... ASTM A992, GRADE 50
   ANGLES AND CHANNELS..... ASTM A36
   PLATES..... ASTM A36
   HOLLOW STRUCTURAL SECTIONS..... ASTM A500, GRADE B (46 KSI)
   STRUCTURAL STEEL NOTED THUS (SO)..... ASTM A572 OR A992, GRADE 50
   ANCHOR BOLTS / THREADED ROD..... ASTM F1554, GRADE 36 U.N.O
   BOLTS (SS)..... ASTM F593
   BOLTS..... ASTM A325
   REINFORCING STEEL..... SEE REINFORCING STEEL SECTION

   WHERE NOTED ON PLANS AS (SS), SHALL BE STAINLESS STEEL, ASTM A709 GRADE 50R. STAINLESS STEEL MECHANICAL TUBING SHALL BE PER ASTM A554 STANDARD SPECIFICATION, AND ALL STAINLESS BARS AND SHAPES SHALL BE PER ASTM A276 STANDARD SPECIFICATIONS.

   FURNISH READILY IDENTIFIABLE STRUCTURAL STEEL COMPLYING WITH CBC 2203.

2. HIGH STRENGTH BOLTS, NUTS, AND WASHERS:
   A. TYPE: PROVIDE HIGH STRENGTH BOLTS, NUTS, AND WASHERS COMPLYING WITH ASTM A325, UNLESS NOTED OTHERWISE. HIGH STRENGTH BOLTS SHALL BE BEARING WITH THREADS INCLUDED IN SHEAR PLANE (A325-N), UNLESS NOTED OTHERWISE. PROVIDE SLIP-CRITICAL HIGH STRENGTH BOLTS (A325-SC) FOR SEISMIC MOMENT FRAME BEAM-TO-COLUMN CONNECTIONS, UNLESS NOTED OTHERWISE.
   B. INSTALLATION: INSTALL HIGH STRENGTH BOLTS COMPLYING WITH "SPECIFICATION FOR STRUCTURAL JOINTS USING HIGH-STRENGTH BOLTS" AND CBC SECTION 2204.2.
   C. TIGHTENING: TIGHTEN A325-N BOLTS TO A SNUG TIGHT CONDITION. TIGHTEN A325-SC BOLTS TO AT LEAST THE MINIMUM TENSION USING ONE OF THE FOLLOWING METHODS: TURN-OF-NUT, CALIBRATED WRENCH, OR DIRECT TENSION INDICATOR TIGHTENING. WHERE 'PRETENSIONED' IS SPECIFIED, APPLY TIGHTENING PER A325-SC BUT SURFACE PREPARATION IS NOT REQUIRED.
3. WELDING:
   A. WELDING STANDARD: AWS D1.1 AND AISC 360 (AWS D1.8 AND AISC 341 FOR SEISMIC FORCE RESISTING SYSTEM).
   B. WELDING PROCESS: WELDING PROCEDURES ARE "MEANS AND METHODS" SELECTED BY THE CONTRACTOR FROM AN APPROVED PROCEDURE IN THE AWS D1.1.
   C. PRE-QUALIFIED A NON PRE-QUALIFIED WELDS: WELDS SHALL BE PRE-QUALIFIED COMPLYING WITH WELDING STANDARD. WHERE NON PRE-QUALIFIED WELDS ARE SPECIFICALLY INDICATED, QUALIFY BY TESTING AND PROCEDURE QUALIFICATION TEST RECORD COMPLYING WITH WELDING STANDARD.
   D. WELDER CERTIFICATION: WELDERS SHALL BE CERTIFIED AS REQUIRED BY GOVERNING CODE AUTHORITY.
   E. SHOP WELDING INCLUDING ULTRASONIC TESTING OF COMPLETE PENETRATION GROOVE WELDS WELDED IN SHOP: PERFORM ON PREMISES OF AN APPROVED FABRICATOR COMPLYING WITH CBC SECTION 1704.2.5.1.
   F. MINIMUM FILLET WELD SIZE: PROVIDE MINIMUM FILLET WELD COMPLYING WITH AISC 360 SECTION J2 AND TABLE J2.4 UNLESS A LARGER SIZE IS INDICATED ON DRAWINGS.
   G. SHOP AND FIELD WELDING INDICATION ON DRAWINGS: NO ATTEMPT IS MADE TO DIFFERENTIATE BETWEEN SHOP AND FIELD WELDED CONNECTIONS.
4. WELD INSPECTION:
   A. LEAD WELDING INSPECTOR CERTIFICATION: LEAD WELDING INSPECTOR SHALL BE A CERTIFIED WELDING INSPECTOR (CWI) COMPLYING WITH AWS-QC1 STANDARDS, SHALL BE RECOGNIZED BY THE BUILDING OFFICIAL AS A REGISTERED DEPUTY INSPECTOR FOR STRUCTURAL STEEL WELDING (ICC CERTIFICATION) AND SHALL POSSES A MINIMUM LEVEL OF UT LEVEL II CERTIFICATION.
   B. OTHER WELDING INSPECTORS: WELDING INSPECTORS PERFORMING VISUAL INSPECTION UNDER THE SUPERVISION OF THE LEAD WELDING INSPECTOR SHALL POSSES ICC CERTIFICATION, AND PERSONS PERFORMING NON-DESTRUCTIVE TESTING SHALL POSSES UT LEVEL II CERTIFICATION. FOUR NON-CERTIFIED WELDING INSPECTORS MAXIMUM SHALL BE UNDER THE SUPERVISION OF A CWI.
   C. WELD INSPECTIONS: PROVIDE WELD INSPECTIONS AS REQUIRED BY CBC SECTION 1705.2 AND AISC 360 CHAPTER N (AISC 341 CHAPTER J FOR SEISMIC FORCE RESISTING SYSTEM), SEE STATEMENT OF SPECIAL INSPECTION AND QUALITY ASSURANCE SECTION.
5. THE STRUCTURAL STEEL FABRICATOR SHALL FURNISH SHOP DRAWINGS OF ALL STEEL FOR THE ENGINEERS REVIEW PRIOR TO FABRICATION. ALL STEEL FABRICATION SHALL BE PERFORMED IN A SHOP APPROVED BY THE BUILDING DEPARTMENT.
6. EXCEPT WHERE ENCASED IN CONCRETE, MASONRY, OR SPRAYED-ON FIREPROOFING, ALL STEEL SHALL BE PRIMERED UNLESS NOTED OTHERWISE ON THE DRAWINGS. PAINTING OF STRUCTURAL STEEL MEMBERS SHALL COMPLY WITH THE REQUIREMENTS CONTAINED IN AISC 360.
7. WELDING SHALL NOT BE PERFORMED IN STEEL MEMBERS SIGNIFICALLY DETAILED. STEEL MEMBERS SHALL BE SHORED WHEN PERMISSIBLE HOLES ARE CUT WITH A TORCH AFTER STEEL IS ERECTED. THE SHORES SHALL REMAIN IN PLACE UNTIL THE STEEL TEMPERATURE HAS RETURNED TO AIR TEMPERATURE.
8. STRUCTURAL STEEL SHALL BE DELIVERED TO THE JOB SITE FREE OF EXCESSIVE RUST, MILL SCALE, GREASE, ETC. AND SHALL BE PRIMED.
9. WHERE WELDING TO EXISTING BEAMS ARE SHOWN, IT IS THE CONTRACTOR'S RESPONSIBILITY TO DETERMINE AND PROVIDE ADEQUATE SHORING OF EXISTING BEAMS FOR LOSS OF STRENGTH DUE TO HEAT DURING WELDING.
10. NON-SHRINK GROUTS OR DRY-PACKS SHALL BE 6000 PSI MIN. ASTM C109 W/ SPECIAL INSPECTION REQUIRED TYP. BASE PLATES SHALL BE GROUTED PRIOR TO PLACEMENT OF CONCRETE ON ANY UPPER FLOORS.
11. ALL ARCHITECTURALLY EXPOSED STRUCTURAL STEEL (AESS) SHALL MEET THE MINIMUM SPECIFICATIONS IN THE AISC CODE OF STANDARD PRACTICE CHAPTER 10 UNLESS NOTED OTHERWISE ON THE ARCHITECTURAL DRAWINGS.
12. WHEN CURVING HSS SECTION, INCREASE WALL THICKNESS AS REQUIRED TO AVOID WALL CURLING.
13. DEMAND CRITICAL WELDS:
    WELDS DESIGNATED AS DEMAND CRITICAL SHALL BE MADE WITH FILLER METALS MEETING THE REQUIREMENTS SPECIFIED IN AWS D1.8M CLAUSE 6.3.

USER NOTE: AWS D1.8/D1.8M REQUIRES THAT ALL SEISMIC FORCE RESISTING SYSTEM WELDS ARE TO BE MADE WITH FILLER METALS CLASSIFIED USING AWS A5 STANDARDS THAT ACHIEVE THE FOLLOWING MECHANICAL PROPERTIES.		
PROPERTY	CLASSIFICATION	
	70 KSI (480 MPa)	80 KSI (550 MPa)
YIELD STRENGTH, KSI (MPa)	58 (400) MIN.	68 (470) MIN.
TENSILE STRENGTH, KSI (MPa)	70 (480) MIN.	80 (550) MIN.
ELONGATION, %	22 MIN.	19 MIN.
CVN TOUGHNESS, ft-lb (J)	20 (27) MIN. @ 0°F (-18°C)a.	

a. FILLER METALS CLASSIFIED AS MEETING 20 ft-lb (27 J) MIN. AT A TEMPERATURE LOWER THAN 0°F (-18°C) ALSO MEET THIS REQUIREMENT.

IN ADDITION TO THE ABOVE REQUIREMENTS, AWS D1.8/D1.8M REQUIRES, UNLESS OTHERWISE EXEMPTED FROM TESTING, THAT ALL DEMAND CRITICAL WELDS ARE TO BE MADE WITH FILLER METALS RECEIVING HEAT INPUT ENVELOPE TESTING THAT ACHIEVE THE FOLLOWING MECHANICAL PROPERTIES IN THE WELD METAL:

MECHANICAL PROPERTIES FOR DEMAND CRITICAL WELDS		
PROPERTY	CLASSIFICATION	
	70 KSI (480 MPa)	80 KSI (550 MPa)
YIELD STRENGTH, KSI (MPa)	58 (400) MIN.	68 (470) MIN.
TENSILE STRENGTH, KSI (MPa)	70 (480) MIN.	80 (550) MIN.
ELONGATION, %	22 MIN.	19 MIN.
CVN TOUGHNESS, ft-lb (J)	40 (54) MIN. @ 70°F (20°C)b.c.	

b. FOR LAST OF +50°F (+10°C), FOR LAST LESS THAN +50°F (+10°C), SEE AWS D1.8/D1.8M SUB-CLAUSE 6.3.6.
c. TESTS CONDUCTED IN ACCORDANCE WITH AWS D1.8/D1.8M ANNEX A MEETING 40 ft-lb (54 J) MIN. AT A TEMPERATURE LOWER THAN +70°F (+20°C) ALSO MEET THIS REQUIREMENT.

14. STRUCTURAL STEEL H-PILES AND STRUCTURAL STEEL SHEET PILING SHALL CONFORM TO THE MATERIAL REQUIREMENTS IN ASTM A6. STEEL PIPE PILES SHALL CONFORM MATERIAL REQUIREMENTS IN ASTM A252. FULLY WELDED STEEL PIPES SHALL BE FABRICATED FROM PLATES THAT CONFORM TO THE MATERIAL REQUIREMENTS IN ASTM A36, ASTM A283, ASTM A572, ASTM A588 OR ASTM A690.
15. ANCHOR ROD HOLES IN BASE PLATES:
    A. ANCHOR ROD HOLES IN BASE PLATES W/O WASHER PLATES, MAXIMUM HOLE SIZE SHALL BE THE ANCHOR DIAMETER +⅛" MAX.
    B. ANCHOR ROD HOLES IN BASE PLATES W/ WASHER PLATES:

MAXIMUM SIZES FOR ANCHOR-ROD HOLES IN BASE PLATES							
ANCHOR ROD DIAMETER, IN.	MAX. HOLE DIAMETER, IN.	MIN. WASHER SIZE, IN.	MIN. WASHER THICKNESS	ANCHOR ROD DIAMETER, IN.	MAX. HOLE DIAMETER, IN.	MIN. WASHER SIZE, IN.	MIN. WASHER THICKNESS
¾	1 5/16	2	¼	1½	2 5/16	3½	½
⅞	1 5/16	2½	5/16	1¾	2¾	4	⅝
1	1 13/16	3	⅜	2	3¼	5	¾
1¼	2 5/16	3	½	2½	3¾	5½	⅞

NOTES:
1. CIRCULAR OR SQUARE WASHERS MEETING THE WASHER SIZE ARE ACCEPTABLE.
2. CLEARANCE MUST BE CONSIDERED WHEN CHOOSING AN APPROPRIATE ANCHOR ROD HOLE LOCATION, NOTHING EFFECTS SUCH AS THE POSITION OF THE ROD IN THE HOLE WITH RESPECT TO THE COLUMN, WELD SIZE AND OTHER INTERFERENCES.
3. WHEN BASE PLATES ARE LESS THAN 1¼ IN. THICK, PUNCHING OF HOLES MAY BE AN ECONOMICAL OPTION. IN THIS CASE, ⅜-IN. ANCHOR RODS AND 1⅛-IN. DIAMETER PUNCHED HOLES MAY BE USED WITH ASTM F844 (USS STANDARD) WASHERS IN PLACE OF FABRICATED PLATE WASHERS.
4. FOR USE AT LFRS MEMBERS, WELDING OF WASHER ŧ TO BASE ŧ REQUIRED. (FILLET WELD = WASHER ŧ THK - 1/16 IN. U.N.O. SUBJECT TO E.O.R. APPROVAL.)

FASTENING SCHEDULE CBC 2022 TABLE 2304.10.2 CONTINUED

DESCRIPTION OF BUILDING ELEMENTS	NUMBER AND TYPE OF FASTENER	SPACING AND LOCATION	
WOOD STRUCTURAL PANELS (WSP), SUB-FLOOR, ROOF AND INTERIOR WALL SHEATHING TO FRAMING AND PARTICLEBOARD WALL SHEATHING TO FRAMING[A]			
		EDGES (INCHES)	INTERMEDIATE SUPPORTS (INCHES)
30. 3/8" - ½"	6d COMMON OR DEFORMED (2"x0.113"):OR 2½"x0.113" NAIL (SUB-FLOOR AND WALL)	6	12
	8d COMMON OR DEFORMED (2½"x0.131"x0.281" HEAD) (ROOF) OR RSRS-01 (2½"x0.113") NAIL (ROOF)[d]	6"	6"
	1½" 16 GAGE STAPLE, ⅞" CROWN (SUB-FLOOR AND WALL)	4	8
	2½"x0.113"x0.266" HEAD NAIL (ROOF)	3'	3'
	1½" 16 GAGE STAPLE, ⅞" CROWN (ROOF)	3'	3'
31. 19/32" - ¾"	8d COMMON (2½"x0.131"); OR DEFORMED (2"x0.113") (SUB-FLOOR AND WALL)	6	12
	8d COMMON OE DEFORMED (2½"x0.131"x0.281" HEAD) (ROOF); OR RSRS-01 (2½"x0.113") NAIL (ROOF)[d]	6"	6"
	2½"x0.113"x0.266" HEAD NAIL; OR 2" 16 GAGE STAPLE, ⅞" CROWN	4	8
32. ⅞" - 1⅛"	10d COMMON (3"x0.148"); OR DEFORMED (2½"x0.131"x0.281" HEAD)	6	12
OTHER EXTERIOR WALL SHEATHING			
33. ½" FIBERBOARD SHEATHING[B]	1½"x0.120", GALVANIZED ROOFING NAIL (⅞" HEAD DIAMETER); OR 1½" 16 GAGE STAPLE WITH ⅞" OR 1" CROWN	3	6
34. 25/32" FIBERBOARD SHEATHING[B]	1½"x0.120 GALVANIZED ROOFING NAIL (⅞" DIAMETER HEAD); OR 1½" 16 GAGE STAPLE WITH ⅞" OR 1" CROWN	3	6
WOOD STRUCTURAL PANELS, COMBINATION SUB-FLOOR UNDERLAYMENT TO FRAMING			
35. ¾" AND LESS	8d COMMON (2½"x0.131"); OR DEFORMED (2"x0.113"); OR DEFORMED (2"x0.120")	6	12
36. ⅞" - 1"	8d COMMON (2½"x0.131"); OR DEFORMED (2½"x0.131"); OR DEFORMED (2½"x0.120")	6	12
37. 1⅛" - 1¼"	10d COMMON (3"x0.148"); OR DEFORMED (2½"x0.131"); OR DEFORMED (2½"x0.120")	6	12
PANEL SIDING TO FRAMING			
38. ½" OR LESS	6d CORROSION-RESISTANT SIDING (1⅞"x0.106"); OR 6d CORROSION-RESISTANT CASING (2"x0.099")	6	12
39. ⅝"	8d CORROSION-RESISTANT SIDING (2½"x0.128"); OR 8d CORROSION-RESISTANT CASING (2½"x0.113")	6	12
INTERIOR PANELING			
40. ¼"	4d CASING (1½"x0.080"); OR 4d FINISH (1½"x0.072")	6	12
41. ⅜"	6d CASING (2"x0.099"); OR 6d FINISH (2"x0.092") (PANEL SUPPORTS AT 24")	6	12

FOR SI: 1 INCH=25.4 MM.

A. NAILS SPACED AT 6 INCHES AT INTERMEDIATE SUPPORTS WHERE SPANS ARE 48 INCHES OR MORE. FOR NAILING OF WOOD STRUCTURAL PANELS AND PARTICLEBOARD DIAPHRAGMS AND SHEAR WALLS, REFER TO SECTION 2305. NAILS FOR WALL SHEATHING ARE PERMITTED TO BE COMMON, BOX OR CASING.
B. SPACING SHALL BE 6 INCHES ON CENTER ON THE EDGES AND 12 INCHES ON CENTER AT INTERMEDIATE SUPPORTS FOR NONSTRUCTURAL APPLICATIONS. PANEL SUPPORTS AT 16 INCHES (20 INCHES IF STRENGTH AXIS IN THE LONG DIRECTION OF THE PANEL, UNLESS OTHERWISE MARKED).
C. WHERE A RAFTER IS FASTENED TO AN ADJACENT PARALLEL CEILING JOIST IN ACCORDANCE WITH THIS SCHEDULE AND THE CEILING JOIST IS FASTENED TO THE TOP PLATE IN ACCORDANCE WITH THIS SCHEDULE, THE NUMBER OF TOENAILS IN THE RAFTER SHALL BE PERMITTED TO BE REDUCED BY ONE NAIL.
D. RSRS-01 IS A ROOF SHEATHING RING SHANK NAIL MEETING THE SPECIFICATIONS IN ASTM F1667.
E. TABULATED FASTENER REQUIREMENTS APPLY WHERE THE ULTIMATE DESIGN WIND SPEED IS LESS THAN 140 MPH. FOR WOOD STRUCTURAL PANEL ROOF SHEATHING ATTACHED TO GABLE-END ROOF FRAMING AND TO INTERMEDIATE SUPPORTS WITHIN 48 INCHES OF ROOF EDGES AND RIDGES, NAILS SHALL BE SPACED AT 4 INCHES ON CENTER WHERE THE ULTIMATE DESIGN WIND SPEED IS GREATER THAN 130 MPH IN EXPOSURE B OR GREATER THAN 110 MPH IN EXPOSURE C. SPACING EXCEEDING 6 INCHES ON CENTER AT THE INTERMEDIATE SUPPORTS SHALL BE PERMITTED WHERE THE FASTENING IS DESIGNED PER THE AWC NDS.
F. FASTENING IS ONLY PERMITTED WHERE THE ULTIMATE DESIGN WIND SPEED IS LESS THAN OR EQUAL TO 110 MPH.
G. NAILS AND STAPLES ARE CARBON STEEL MEETING THE SPECIFICATIONS OF ASTM F1667. CONNECTIONS USING NAILS AND STAPLES OF OTHER MATERIALS, SUCH AS STAINLESS STEEL, SHALL BE DESIGNED BY ACCEPTABLE ENGINEERING PRACTICE OR APPROVED UNDER SECTION 104.11.

MANUFACTURED COMMERCIAL JOISTS:

1. MANUFACTURED JOISTS SHALL BE 'REDBUILT'.
2. SUBSTITUTIONS SHALL BE EQUIVALENT AND SHALL BE APPROVED BY THE ARCHITECT AND THE ENGINEER, PRIOR TO FABRICATION.
3. MANUFACTURED FRAMING SHALL BE DESIGNED FOR THE DEAD LOADS OF THE MATERIALS SHOWN ON THE DRAWINGS PLUS A LIVE LOAD AS INDICATED ON THE DRAWINGS.
4. MANUFACTURER SHALL FURNISH PLANS AND CALCULATIONS SIGNED BY A LICENSED ENGINEER THE STATE OF CALIFORNIA AND SHALL BE RESPONSIBLE FOR ALL REQUIREMENTS OF THE BUILDING DEPARTMENT.
5. PLANS AND CALCULATIONS SHALL BE SUBMITTED TO THE BUILDING DEPARTMENT AND THE ENGINEER FOR APPROVAL PRIOR TO FABRICATION.
6. I-JOISTS
   - ICC-ES ESR-2994
   - LARR 25883

MICROLLAM LAMINATED VENEER LUMBER (LVL):

1. MICROLAMM LAMINATED VENEER LUMBER (LVL) BEAMS, RIM JOISTS AND STUDS SHALL BE AS MANUFACTURED BY WEYERHAEUSER. DESIGN AND INSTALLATION SHALL BE IN ORDINANCE WITH ICC-ES ESR-1387.
2. MICROLAMM LAMINATED VENEER LUMBER (LVL) BEAMS AND RIM JOISTS SHALL BE GRADE 1.8E (U.N.O.) AND PROVIDE STRESS VALUES THAT MEET OR EXCEED THE FOLLOWING: (ENGINEER TO VERIFY)
   BENDING STRESS (EDGE LOADING), FB..... 2445 PSI
   SHEAR STRESS (EDGE LOADING), FV..... 285 PSI
   COMPRESSIVE STRESS PERPENDICULAR TO THE GRAIN (EDGE LOAD), FC..... 750 PSI
   BENDING STRESS (PLANK LOADING), FB..... 2890 PSI
   SHEAR STRESS (PLANK LOADING), FV..... 190 PSI
   COMPRESSIVE STRESS PERPENDICULAR TO THE GRAIN (PLANK LOADING), FC..... 480 PSI
   TENSILE STRESS, FT..... 1450 PSI
   COMPRESSIVE STRESS PARALLEL TO THE GRAIN, FC..... 2375 PSI
   MODULUS OF ELASTICITY, E..... 1,800,000 PSI
3. MICROLAMM LAMINATED VENEER LUMBER (LVL) BEAMS AND RIM JOISTS SHALL BE GRADE 2.0E (WHERE NOTED) AND PROVIDE STRESS
   VALUES THAT MEET OR EXCEED THE FOLLOW: (ENGINEER TO VERIFY)
   BENDING STRESS (EDGE LOADING), FB..... 2750 PSI
   SHEAR STRESS (EDGE LOADING), FV..... 285 PSI
   COMPRESSIVE STRESS PERPENDICULAR TO THE GRAIN (EDGE LOAD), FC..... 750 PSI
   BENDING STRESS (PLANK LOADING), FB..... 3255 PSI
   SHEAR STRESS (PLANK LOADING), FV..... 190 PSI
   COMPRESSIVE STRESS PERPENDICULAR TO THE GRAIN (PLANK LOADING), FC..... 480 PSI
   TENSILE STRESS, FT..... 1660 PSI
   COMPRESSIVE STRESS PARALLEL TO THE GRAIN, FC..... 2635 PSI
   MODULUS OF ELASTICITY, E..... 2,000,000 PSI
4. PRODUCT OF OTHER MANUFACTURERS WITH EQUAL OR GREATER CAPACITY MAY BE USED.

MIN. LSL & LVL RIM JOIST BLOCKING IN LOAD BEARING WALLS.			
MAX. DEPTH	MIN. THK.	ALLOWABLE LOAD	
		lb/ft	lb
14"	1 ¾"	5400	3760
20"	1 ¾"	5740	4520
24"	1 ¾"	6470	4520

FASTENING SCHEDULE CBC 2022 TABLE 2304.10.2 CONTINUED

DESCRIPTION OF BUILDING ELEMENTS	NUMBER AND TYPE OF FASTENER	SPACING AND LOCATION
ROOF CONT.		
5. COLLAR TIE TO RAFTER	(3)10d COMMON (3"x0.148"); OR (4)10d BOX (3"x0.128"); OR (4)3"x0.131" NAILS; OR (4)3" 14 GAGE STAPLES, 7/16" CROWN	FACE NAIL
6. RAFTER OR ROOF TRUSS TO TOP PLATE (SEE SECTION 2808.7.5, TABLE 2308.7.5)	(3)10d COMMON (3"x0.148"); OR (3)16d BOX (3½"x0.135"); OR (4)10d BOX (3"x0.128"); OR (4)3"x0.131" NAILS; OR (4)3" 14 GAGE STAPLES, 7/16" CROWN	2 TOENAILS ON ONE SIDE AND 1 TOENAIL ON OPPOSITE SIDE OF RAFTER OR TRUSS[c]
7. ROOF RAFTERS TO RIDGE VALLEY OR HIP RAFTERS; OR ROOF RAFTER TO 2-INCH RIDGE BEAM	(2)16d COMMON (3½"x0.162"); OR (3)16d BOX (3½"x0.135"); OR (3)10d COMMON (3"x0.128"); OR (3)3"x0.131" NAILS; OR (3)3" 14 GAGE STAPLES, 7/16" CROWN	ENDNAIL
	(3)10d COMMON (3½"x0.148"); OR (4)16d COMMON (3½"x0.135"); OR (4)10d BOX (3"x0.128"); OR (4)3"x0.131" NAILS; OR (4)3" 14 GAGE STAPLES, 7/16" CROWN	TOENAIL
WALL		
8. STUD TO STUD (NOT AT BRACED WALL PANELS)	16d COMMON (3½"x0.162")	24"OC FACE NAIL
	10d BOX (3"x0.128"); OR 3"x0.131" NAIL; OR (3)3" 14 GAGE STAPLE, 7/16" CROWN	16"OC FACE NAIL
9. STUD TO STUD AND ABUTTING STUDS AT INTERSECTING WALL CORNERS (AT BRACED WALL PANELS)	16d COMMON (3½"x0.162"); OR	16"OC FACE NAIL
	16d BOX (3½"x0.135"); OR 3"x0.131" NAILS; OR (3)3" 14 GAGE STAPLE, 7/16" CROWN	12"OC FACE NAIL
10. BUILT-UP HEADER (2" TO 2" HEADER)	16d COMMON (3½"x0.162")	16"OC EACH EDGE, FACE NAIL
	16d BOX (3½"x0.135")	12"OC EACH EDGE, FACE NAIL
11. CONTINUOUS HEADER TO STUD	(4)8d COMMON (2½"x0.131"); OR (4)10d COMMON (3"x0.128"); OR (5)8d BOX (2½"x0.113")	TOENAIL
12. TOP PLATE TO TOP PLATE	16d COMMON (3½"x0.162"); OR	16"OC FACE NAIL
	10d BOX (3"x0.128"); OR 3"x0.131" NAILS; OR 3" 14 GAGE STAPLES. 7/16" CROWN	12"OC FACE NAIL
13. TOP PLATE TO TOP PLATE, AT END JOINTS	(8)16d COMMON (3½"x0.162"); OR (12)16d BOX (3½"x0.135");OR (12)10d BOX (3"x0.128"); OR (12)3"x0.131" NAILS; OR (12)3" 14 GAGE STAPLES. 7/16" CROWN	EACH SIDE OF END JOINT, FACE NAIL (MIN. 24" LAP SPLICE LENGTH EACH SIDE OF END JOINT)
14. BOTTOM PLATE TO JOIST, RIM JOIST, BAND JOIST OR BLOCKING (NOT AT BRACED WALL PANELS)	16d COMMON (3½"x0.162"); OR	16"OC FACE NAIL
	16d (3½"x0.135"); OR 3"x0.131" NAILS; OR 3" 14 GAGE STAPLES. 7/16" CROWN	12"OC FACE NAIL
15. BOTTOM PLATE TO JOIST, RIM JOIST, BAND JOIST OR BLOCKING AT BRACED WALL PANELS	(2)16d COMMON (3½"x0.162"); OR (3)16d BOX (3½"x0.135"); OR (4)3"x0.131" NAILS; OR (4)3" 14 GAGE STAPLES, 7/16" CROWN	16"OC FACE NAIL
16. STUD TO TOP OR BOTTOM PLATE	(3)16d BOX (3½"x0.135"); OR (4)8d COMMON (2½"x0.131"); OR (4)10d BOX (3"x0.128"); OR (4)3"x0.131" NAILS; OR (4)8d BOX (2½"x0.113"); OR (4)3" 14 GAGE STAPLES, 7/16"CROWN	TOENAIL
	(2)16d COMMON (3½"x0.162"); OR (3)16d BOX (3½"x0.135"); OR (3)10d BOX (3"x0.128"); OR (3)3"x0.131" NAILS; OR (3)3" 14 GAGE STAPLES, 7/16" CROWN	END NAIL
17. TOP PLATES, LAPS AT CORNERS AND INTERSECTIONS	(2)16d COMMON (3½"x0.162"); OR (3)10d BOX (3"x0.128"); OR (3)3"x0.131" NAILS; OR (3)3" 14 GAGE STAPLES, 7/16" CROWN	FACE NAIL
18. 1" BRACE TO EACH STUD AND PLATE	(3)8d BOX (2½"x0.113");OR (2)8d COMMON (2½"x0.131"); OR (2)10d BOX (3"x0.128"); OR (2)3"x0.131" NAILS; OR (2)3" 14 GAGE STAPLES, 7/16" CROWN	FACE NAIL
19. 1"x6" SHEATHING TO EACH BEARING	(3)8d BOX (2½"x0.113"); OR (2)8d COMMON (2½"x0.131"); OR (2)10d BOX (3"x0.128"); OR (2)1¾" 16 GAGE STAPLES, 1" CROWN	FACE NAIL
20. 1"x8" AND WIDER SHEATHING TO EACH BEARING	(3)8d COMMON (2½"x0.131"); OR (3)8d BOX (2½"x0.113"); OR (3)10d BOX (3"x0.128"); OR (3)1¾" 16 GAGE STAPLES, 1" CROWN	FACE NAIL
	WIDER THAN 1"x8" (3)8d COMMON (2½"x0.131"); OR (4)8d BOX (2½"x0.113"); OR (3)10d BOX (3"x0.128"); OR (4)1¾" 16 GAGE STAPLES, 1" CROWN	
FLOOR		
21. JOIST TO SILL, TOP PLATE, OR GIRDER	(4)8d BOX (2½"x0.113"); OR (3)8d COMMON (2½"x0.131"); OR FLOOR (3)10d BOX (3"x0.128"); OR (3)3"x0.131" NAILS; OR (3)3" 14 GAGE STAPLES, 7/16" CROWN	TOENAIL
22. RIM JOIST, BAND JOIST, OR BLOCKING TO TOP PLATE, SILL OR OTHER FRAMING BELOW	8d BOX (2½"x0.113")	4"OC TOENAIL
	8d COMMON (2½"x0.131"); OR 10d BOX (3"x0.128"); OR 3"x0.131" NAILS; OR 3" 14 GAGE STAPLES, 7/16" CROWN	6"OC TOENAIL
23. 1"x6" SUB-FLOOR OR LESS TO EACH JOIST	(3)8d BOX (2½"x0.113"); OR (2)8d COMMON (2½"x0.131"); OR (3)10d BOX (3"x0.128"); OR (2)1¾" 16 GAGE STAPLES, 1" CROWN	FACE NAIL
24. 2" SUB-FLOOR TO JOIST OR GIRDER	(3)16d BOX (3½"x0.135"); OR (2)16d COMMON (3½"x0.162")	BLIND AND FACE NAIL
25. 2" PLANKS (PLANK & BEAM-FLOOR & ROOF)	(3)16d BOX (3½"x0.135"); OR (2)16d COMMON (3½"x0.162")	EACH BEARING, FACE NAIL
26. BUILT-UP GIRDERS AND BEAMS, 2" LUMBER LAYERS	20d COMMON (4"x0.192")	32"OC FACE NAIL AT TOP AND BOTT. STAGG. ON OPPOSITE SIDES
	10d COMMON (3"x0.128"); OR 3"x0.131" NAILS; OR 3" 14 GAGE STAPLES. 7/16" CROWN	24"OC FACE NAIL AT TOP AND BOTT. STAGG. ON OPPOSITE SIDES
	AND: (2)20d COMMON (4"x0.192"); OR (3)10d BOX (3"x0.128"); OR (3)3"x0.131" NAILS; OR (3)3" 14 GAGE STAPLES, 7/16" CROWN	ENDS AND AT EACH SPLICE, FACE NAIL
27. LEDGER STRIP SUPPORTING JOISTS OR RAFTERS	(3)16d COMMON (3½"x0.162"); OR (4)16d BOX (3½"x0.135");OR (4)10d BOX (3"x0.128"); OR (4)3"x0.131" NAILS; OR (4)3" 14 GAGE STAPLES, 7/16" CROWN	EACH JOIST OR RAFTER, FACE NAIL
28. JOIST TO BAND JOIST OR RIM JOIST	(3)16d COMMON (3½"x0.162"); OR (4)10d BOX (3"x0.128"); OR (4)3"x0.131" NAILS; OR (4)3" 14 GAGE STAPLES, 7/16" CROWN	END NAIL
29. BRIDGING OR BLOCKING TO JOIST, RAFTER OR TRUSS	(2)8d COMMON (2½"x0.131"); OR (2)10d BOX (3"x0.128"); OR (2)3"x0.131" NAILS; OR (2)3" 14 GAGE STAPLES, 7/16" CROWN	EACH END, TOENAIL

FRAMING LUMBER:

1. ALL FRAMING LUMBER SHALL BE COAST REGION DOUGLAS FIR-LARCH & SHALL CONFORM TO THE FOLLOWING GRADES AS ESTABLISHED BY THE W.C.L.I.B. SAWN LUMBER, MACHINE STRESS-RATED OR MACHINE-EVALUATED LUMBER, SHALL BE IDENTIFIED BY THE GRADE MARK OF LUMBER GRADING OR INSPECTION AGENCY THAT HAS BEEN APPROVED BY AN ACCREDITATION BODY THAT COMPLIES WITH DOC PS 20 OR EQUIVALENT.:
   A. STUDS: (EXCEPT AS NOTED ON DRAWINGS)
      1. 2"-4" THICK, 2"-4" WIDE, INTERIOR, NON-BEARING PARTITIONS, STANDARD GRADE.
      2. 2"-4" THICK, NO.2 OR BETTER DF.
   B. JOISTS AND RAFTERS: (EXCEPT AS NOTED ON DRAWINGS)
      1. 2"-4" THICK, 2"-4" WIDE, NO.2
      2. 2"-4" THICK, 5" AND WIDER, NO.2
   C. BEAMS AND HEADERS: (EXCEPT AS NOTED ON DRAWINGS)
      1. 2"-4" THICK, 5" AND WIDER, NO.1
      2. 5" AND THICKER, NO.1
   D. POSTS: ALL POSTS NO.1
   E. TOP PLATES: 2 X 4 NO.1 2 X 6 NO.2 OR BETTER
   F. BLOCKING: STANDARD GRADE
   G. SILL PLATES:
      1. ALL SILL PLATES IN CONTACT WITH CONCRETE OR MASONRY SHALL BE PRESSURE TREATED.
   H. MICROLLAM LVL, OR PARALLAM PSL MAY BE USED IN LIU OF ANY GRADES LISTED ABOVE.
2. ALL FRAMING ANCHORS, CLIPS, STRAPS, HANGERS, ETC., SHALL BE MANUFACTURED BY SIMPSON COMPANY OR I.C.C. APPROVED EQUAL WITH 5% TOLERANCE.
3. HY-TEK FASTENERS MAY BE USED AS AN APPROVED EQUAL IN LIEU OF COMMON, SHORT, BOX, SINKER NAILS, AND SIMPSON SDS SCREWS AS APPROVED IN ICC-ES ESR-2648 (LARR 25959 IN THE CITY OF LOS ANGELES).
4. ALL BEAM AND JOIST HANGERS SHALL BE THE FULL DEPTH OF THE MEMBER IT IS SUPPORTING.
5. ALL BEAM AND JOIST METAL HANGERS SHALL HAVE ALL HOLES FILLED PER MANUF. TO ACHIEVE MAX CAPACITY.
6. TYPICAL ROOF SHEATHING SHALL BE 5 PLY, WITH THICKNESS & PANEL INDEX LUMBER AS INDICATED ON THE DRAWINGS. STAGGER SHEETS 4'-0". FACE GRAIN SHALL BE PERPENDICULAR TO THE SUPPORTS. PLYWOOD SHALL BE NAILED AS INDICATED ON THE DRAW

MASONRY:

1. MIN. SPECIFIED COMPRESSIVE STRENGTH SHALL BE f'm = 2,000 PSI, UNLESS OTHERWISE SPECIFIED ON THE PLANS. WHERE HIGHER f'm IS SPECIFIED, REFER TO TMS 602 TABLE 2 BELOW.
2. BLOCK SHALL BE MEDIUM WEIGHT UNITS CONFORMING TO ASTM C-90 GRADE N-1. USE UNITS OPEN ONE END, AND BOND BEAM UNITS AT HORIZONTAL REINFORCING. WHEN BLOCKS ARE EXPOSED OBTAIN APPROVAL OF SUBMITTAL FROM ARCHITECT.
3. MORTAR (TYPE M OR S) SHALL ATTAIN A MINIMUM COMPRESSIVE STRENGTH EQUAL TO THE BLOCK STRENGTH OR 2,000 PSI, WHICHEVER IS GREATER.
4. CEMENT: ASTM C-150, LOW ALKALI, TYPE I OR II PORTLAND CEMENT. (MASONRY CEMENT AND PLASTIC CEMENT SHALL NOT BE USED.)
5. MORTAR:
   A. CONFORMING TO ASTM C-270, TYPE M OR S.
   B. MIX PROPORTIONS SHALL CONFORM TO ASTM C-270.
   C. AGGREGATES SHALL CONFORM TO ASTM C-144.
6. GROUT:
   A. FINE GROUT CONFORMING TO ASTM C-476.
   B. ATTAINS THE MASONRY COMPRESSIVE STRENGTH f'm OR 2,000 PSI AT 28 DAYS, WHICHEVER IS GREATER. WHERE HIGHER f'm IS SPECIFIED, REFER TO TMS 602 TABLE 2 BELOW.
   C. MIX PROPORTIONS SHALL CONFORM TO ASTM C-476.
   D. AGGREGATES SHALL CONFORM TO ASTM C-404.
   E. DO NOT USE ADMIXTURES UNLESS ACCEPTABLE. FIELD ADDITION OF ADMIXTURES IS NOT PERMITTED IN SELF-CONSOLIDATING GROUT. TMS 602-13, 2.2C
7. REINFORCING STEEL: USE ASTM A 706 OR ASTM A 615 GRADE 60.
8. MINIMUM GROUTING: SOLID GROUT ALL CELLS UNLESS NOTED OTHERWISE. VERTICAL EXPANSION JOINTS SHALL BE PROVIDED AT 26'-0" o/c MAXIMUM UNO PER PLAN. FULLY COORDINATE LOCATIONS WITH ARCH & EOR FOR REVIEW PRIOR TO PLACEMENT. EXPANSION JOINT MATERIALS SHALL BE PER ASTM C90, D994, OR D1056 CLASS 2A1.
9. SPECIAL INSPECTION OF WORK IS REQUIRED FOR ALL MASONRY STRUCTURES PER TMS 402/ACI 530/ASCE 5 LEVEL B QUALITY ASSURANCE, UNLESS NOTED OTHERWISE ON THE DRAWINGS.
10. ALL BOLTS SHALL BE GROUTED IN PLACE WITH AT LEAST 1 INCH OF GROUT BETWEEN THE BOLT AND THE MASONRY.
11. THE CLEAR DISTANCE BETWEEN PARALLEL BARS SHALL NOT BE LESS THAN THE NOMINAL DIAMETER OF THE BARS, NOR LESS THAN 1 IN. (25.4mm).
12. IN COLUMNS AND PILASTERS, THE CLEAR DISTANCE BETWEEN VERTICAL BARS SHALL NOT BE LESS THAN ONE AND
    ONE-HALF TIMES THE NOMINAL BAR DIAMETER, NOR LESS THAN 1½ IN. (38.1mm).
13. THE CLEAR DISTANCE LIMITATIONS BETWEEN BARS REQUIRED IN SECTIONS 1.13.3.1 AND 1.13.3.2 SHALL ALSO APPLY TO THE CLEAR DISTANCE BETWEEN A CONTACT LAP SPLICE AND ADJACENT SPLICES OR BARS.
14. GROUPS OF PARALLEL REINFORCING BARS BUNDLED IN CONTACT TO ACT AS A UNIT SHALL BE LIMITED TO TWO IN ANY ONE BUNDLE. INDIVIDUAL BARS IN A BUNDLE CUT OFF WITHIN THE SPAN OF A MEMBER SHALL TERMINATE AT POINTS AT LEAST 40 BAR DIAMETER APART.
15. REINFORCEMENT EMBEDDED IN GROUT SHALL HAVE A THICKNESS OF GROUT BETWEEN THE REINFORCEMENT AND MASONRY UNITS NOT LESS THAN ¼ IN. (6.4mm) FOR FINE GROUT OR ½ IN. (12.7mm) FOR COARSE GROUT.
16. REINFORCING BARS SHALL HAVE A MASONRY COVER NOT LESS THAN THE FOLLOWING:
    A. MASONRY FACE EXPOSED TO EARTH OR WEATHER: 2 IN. (50.8mm) FOR BARS LARGER THAN NO.5 (M #16); 1½ IN. (38.1mm) FOR NO.5 (M #16) BARS OR SMALLER.
    B. MASONRY NOT EXPOSED TO EARTH OR WEATHER: 1½ IN. (38.1mm).
17. LONGITUDINAL WIRES OF JOINT REINFORCEMENT SHALL BE FULLY EMBEDDED IN MORTAR OR GROUT WITH A MINIMUM COVER OF ⅝ IN. (15.9mm) WHEN EXPOSED TO EARTH OR WEATHER AND ½ IN. (12.7mm) WHEN NOT EXPOSED TO EARTH OR WEATHER. JOINT REINFORCEMENT SHALL BE STAINLESS STEEL OR PROTECTED FROM CORROSION BY HOT-DIPPED GALVANIZED COATING OR EPOXY COATING WHEN USED IN MASONRY EXPOSED TO EARTH OR WEATHER AND IN INTERIOR WALLS EXPOSED TO A MEAN RELATIVE HUMIDITY EXCEEDING 75 PERCENT. ALL OTHER JOINT REINFORCEMENT SHALL BE MILL GALVANIZED, HOT-DIP GALVANIZED, OR STAINLESS STEEL.
18. WALL TIES, SHEET-METAL ANCHORS, STEEL PLATES AND BARS, AND INSERTS EXPOSED TO EARTH OR WEATHER, OR EXPOSED TO A MEAN RELATIVE HUMIDITY EXCEEDING 75 PERCENT SHALL BE STAINLESS STEEL OR PROTECTED FROM CORROSION BY HOT-DIP GALVANIZED COATING OR EPOXY COATING. WALL TIES, ANCHORS, AND INSERTS SHALL BE MILL GALVANIZED, HOT-DIP GALVANIZED, OR STAINLESS STEEL FOR ALL OTHER CASES. ANCHOR BOLTS, STEEL PLATES, AND BARS NOT EXPOSED TO EARTH, WEATHER, NOR EXPOSED TO A MEAN RELATIVE HUMIDITY EXCEEDING 75 PERCENT, NEED NOT BE COATED.
19. REINFORCEMENT SHALL BE SUPPORTED AND FASTENED TOGETHER TO PREVENT DISPLACEMENTS BEYOND THE TOLERANCES ALLOWED BY SECTION 3.4 OF ACI 530.1 PRIOR TO GROUTING.
20. GROUT LIFTS SHALL NOT EXCEED 5 FEET WHEN THE MASONRY HAS CURED FOR 4 HOURS, THE GROUT SLUMP IS MAINTAINED BETWEEN 10 AND 11 INCHES AND NO INTERMEDIATE REINFORCED BOND BEAMS ARE PLACED BETWEEN THE TOP AND THE BOTTOM OF THE POUR HEIGHT. OTHERWISE, PLACE GROUT IN LIFTS NOT EXCEEDING 5 FEET. (SECTION 3.5 OF ACI 530.1)
21. PIPES AND CONDUITS EMBEDDED IN MASONRY SHALL NOTE REDUCE THE REQUIRED STRENGTH. (SECTION 1.16.2 OF ACI 530)
22. SUPPORT AND FASTEN REINFORCEMENT TOGETHER TO PREVENT DISPLACEMENT BEYOND THE TOLERANCES ALLOWED BY CONSTRUCTION LOADS OR BY PLACEMENT OF GROUT OR MORTAR.
23. COMPLETELY EMBED REINFORCING BARS IN GROUT IN ACCORDANCE WITH ARTICLE 3.5 ACI 350.
24. MAINTAIN CLEAR DISTANCE BETWEEN REINFORCING BARS AND ANY FACE OF MASONRY UNIT OR FORMED SURFACE, BUT NOT LESS THAN ¼ IN. (6.4mm) FOR FINE GROUT OR ½ IN. (12.7mm) FOR COARSE GROUT.
25. SPLICE ONLY WHERE INDICATED ON THE PROJECT DRAWINGS, UNLESS OTHERWISE ACCEPTABLE. WHEN SPLICING BY WELDING, PROVIDE WELDS IN CONFORMANCE WITH THE PROVISIONS OF AWS D1.4.
26. UNLESS ACCEPTED BY THE ARCHITECT/ENGINEER, DO NOT BEND REINFORCEMENT AFTER IT IS EMBEDDED IN GROUT OR MORTAR.
27. NON-CONTACT LAP SPLICES - POSITION BARS SPLICED BY NON-CONTACT LAP SPLICE NO FARTHER APART TRANSVERSELY THAN ONE-FIFTH THE SPECIFIED LENGTH OF LAP NOR MORE THAN 8 IN. (203mm).
28. TOLERANCES FOR THE PLACEMENT OF REINFORCING BARS IN WALLS AND FLEXURAL ELEMENTS SHALL BE ± ¼ IN. (12.7mm) WHEN THE DISTANCE FROM THE CENTERLINE OF REINFORCING BARS TO THE OPPOSITE FACE OF MASONRY, *d*, IS EQUAL TO 8 IN. (203mm) OR LESS, ± 1 IN. (25.4mm) FOR *d* EQUAL TO 24 IN. (610mm) OR LESS BUT GREATER THAN 8 IN. (203mm), AND ± 1¼ IN. (31.8mm) FOR *d* GREATER THAN 24 IN. (610mm).
29. PLACE VERTICAL BARS WITHIN 2 IN. (50.8mm) OF THE REQUIRED LOCATION ALONG THE LENGTH OF THE WALL.
30. IF IT IS NECESSARY TO MOVE BARS MORE THAN ONE BAR DIAMETER OR A DISTANCE EXCEEDING THE TOLERANCE STATED ABOVE TO AVOID INTERFERENCE WITH OTHER REINFORCING STEEL, CONDUITS, OR EMBEDDED ITEMS, NOTIFY THE ARCHITECT/ENGINEER FOR ACCEPTANCE OF THE RESULTING ARRANGEMENT OF BARS.
31. FOUNDATION DOWELS THAT INTERFERE WITH UNIT WEBS ARE PERMITTED TO BE BENT TO A MAXIMUM OF 1 IN. (25mm) HORIZONTALLY FOR EVERY 6 IN. (152mm) OF VERTICAL HEIGHT.
32. EMBED HEADED AND BENT-BAR ANCHOR BOLTS LARGER THAN ¼ IN. (6.4mm) DIAMETER IN GROUT THAT IS PLACED IN ACCORDANCE WITH ARTICLE 3.5 A AND ARTICLE 3.5 B ACI 350. ANCHOR BOLTS OF ¼ IN. (6.4mm) DIAMETER OR LESS ARE PERMITTED TO BE PLACED IN GROUT OR MORTAR BED JOINTS THAT HAVE A SPECIFIED THICKNESS OF AT LEAST ½ IN. (12.7mm) THICKNESS.
33. MAINTAIN CLEAR DISTANCE BETWEEN ANCHOR BOLTS AND ANY FACE OF MASONRY UNIT OR FORMED SURFACE OF AT LEAST ¼ IN. (6.4mm) WHEN USING FINE GROUT, AND OF AT LEAST ½ IN. (12.7mm) WHEN USING COARSE GROUT.
34. PLACE ANCHOR BOLTS WITH A CLEAR DISTANCE BETWEEN PARALLEL ANCHOR BOLTS NOT LESS THAN THE NOMINAL DIAMETER OF THE ANCHOR BOLT, NOR LESS THAN 1 IN. (25.4mm).
35. OWNER WILL ENGAGE A QUALIFIED INDEPENDENT TESTING AGENCY TO PERFORM PRECONSTRUCTION TESTING INDICATED BELOW. RETESTING OF MATERIALS THAT FAIL TO COMPLY WITH SPECIFIED REQUIREMENTS SHALL BE DONE AT CONTRACTOR'S EXPENSE.
36. CONCRETE MASONRY UNIT TEST: FOR EACH TYPE OF UNIT REQUIRED, ACCORDING TO ASTM C 140 FOR COMPRESSIVE STRENGTH.
37. MORTAR TEST (PROPERTY SPECIFICATION): FOR EACH MIX REQUIRED, ACCORDING TO ASTM C 109/C 109M FOR COMPRESSIVE STRENGTH[, ASTM C 1506 FOR WATER RETENTION, AND ASTM C 91 FOR AIR CONTENT].
38. MORTAR TEST (PROPERTY SPECIFICATION): FOR EACH MIX REQUIRED, ACCORDING TO ASTM C 780 FOR COMPRESSIVE STRENGTH.
39. GROUT TEST (COMPRESSIVE STRENGTH): FOR EACH MIX REQUIRED, ACCORDING TO ASTM C 1019.
40. COMPRESSIVE STRENGTH OF MASONRY BASED ON THE COMPRESSIVE STRENGTH OF CONCRETE MASONRY UNITS AND TYPE OF MORTAR USED IN CONSTRUCTION.

TMS 602 Table 2 (MODIFIED)

NET AREA COMPRESSIVE STRENGTH OF CONCRETE MASONRY (f'm), PSI (MPa)	NET AREA COMPRESSIVE STRENGTH OF CONCRETE MASONRY UNITS (f'cmu), PSI (MPa)		GROUT STRENGTH (f'g), PSI
	TYPE M OR S MORTAR	TYPE N MORTAR	
1,700 (11.72)	---	1,900 (13.10)	2,000
1,900 (13.10)	1,900 (13.10)	2,350 (16.20)	2,000
2,000 (13.79)	2,000 (13.79)	2,650 (18.27)	2,000
2,250 (15.51)	2,600 (17.93)	3,400 (23.44)	2,600
2,500 (17.24)	3,250 (22.41)	4,250 (28.96)	3,250
2,750 (18.96)	3,900 (26.89)	----	3,900
3,000 (20.69)	4,500 (31.03)	----	4,500
1. FOR UNITS OF LESS THAN 4 IN. (102 mm) NOMINAL HEIGHT, USE 85 PERCENT OF THE VALUES LISTED.			

NOT PERMITTED

41. VERIFY & ADVISE ARCHITECT OF ROUGH OPENINGS NOT ON MASONRY COURSING. VERIFY TOP OF FOOTING ELEVATIONS FOR PROPER COURSING ELEVATIONS.

AGENCY

REVIEWED FOR CODE COMPLIANCE BY: WILLDAN ENGINEERING

Approval of these plans & specifications shall not be construed to be a permit for, or an approval of any violation of any Federal, State, County or City laws or ordinances. One set of approved plans must be kept on the job until completion.

10:04:31 AM Jul 21, 2025

PTN_____ APPL_____

FLEWELLING & MOODY
architecture planning interiors

HEADQUARTERS OFFICE:
99 South Lake Avenue, Suite 300
Pasadena, CA 91101
Phone: 323.543.8300
E-Mail: fm-pasadena@flewelling-moody.com

ANTELOPE VALLEY OFFICE:
1035 West Lancaster Boulevard
Lancaster, California 93534
Phone: 661.949.0771
E-Mail: fm-lancaster@flewelling-moody.com

An Employee Owned Corporation

ARCHITECT

CONSULTANT

REGISTERED PROFESSIONAL ENGINEER ZACHARY SCOTT LINDSEY No. 6422 STRUCTURAL STATE OF CALIFORNIA

RGSE inc.
Structural Engineers
2720 Cochran St. Suite 8B
Simi Valley, CA 93065
P: 805.522.3379
www.rgseinc.com
info@rgseinc.com

Drawn by aaronc@rgseinc.com

Checked by sokheanc@rgseinc.com

Revisions

No.	Date	Description

All dimensions must be checked at the job by the contractor who accepts full responsibility for their accuracy under the contract. These plans & the specifications in connection therewith have been prepared for a specific site. Any and all responsibility for their use in whole or in part on any other site is hereby disclaimed by Flewelling & Moody.

CITY OF RIDGECREST

SGT. JOHN PINNEY MEMORIAL POOL
REPLACEMENT PROJECT

205 S WARNER ST, RIDGECREST,CA 93555

GENERAL NOTES

Job No. 3055-0100

Date 04-18-2025

S0.03

9 MASONRY CONSTRUCTION (Section 1705.4 and TMS 402/602 and 2105)

9.1 THE SPECIAL INSPECTOR SHALL VERIFY COMPLIANCE OF THE FOLLOWING, PRIOR TO CONSTRUCTION:
- A. CERTIFICATES OF COMPLIANCE FOR MATERIALS USED IN MASONRY CONSTRUCTION. (1706.1)
- B. PROPORTIONS OF MATERIALS - INCLUDING ADMIXTURES - IN MORTAR AND GROUT AS DELIVERED TO THE SITE.
- C. FM AND FAAC PRIOR TO CONSTRUCTION, AND FOR EVERY 5,000 SQ. FT. DURING CONSTRUCTION. (1708.1)

9.2 THE SPECIAL INSPECTOR SHALL PROVIDE CONTINUOUS INSPECTION AS FOLLOWS:
- A. DURING PLACEMENT OF ALL MASONRY UNITS, REINFORCEMENT, CONNECTORS, PRESTRESSING TENDONS AND ANCHORAGE.
- B. DURING INSTALLATION AND IMMEDIATELY PRIOR TO CLOSING OF CLEANOUTS.
- C. DURING ALL GROUTING OPERATIONS.
- D. DURING PREPARATION AND TAKING OF PRISMS OR TEST SPECIMENS.
- E. DURING WELDING OF REINFORCING STEEL.
- F. DURING APPLICATION AND MEASURING OF PRESTRESSING FORCE.

9.3 THE SPECIAL INSPECTOR SHALL PROVIDE PERIODIC INSPECTION AS FOLLOWS:
- A. AT THE START AND DURING EACH PHASE OF THE PROJECT TO CONFIRM MATERIAL CERTIFICATIONS AND TESTING REQUIREMENTS, PERSONNEL QUALIFICATIONS AS REQUIRED, AND PROCEDURES WITH THE APPLICABLE CODES, PLANS AND SPECIFICATIONS.
- B. AT SUCH FREQUENCY AS NECESSARY, TO VERIFY THAT THE CLEANLINESS, MORTAR PROJECTIONS AND REINFORCEMENT CLEARANCES WITHIN GROUT SPACES, CONFORM TO THE MINIMUM REQUIREMENTS.
- C. TO VERIFY THAT THE GROUT POURS AND CONSTRUCTION JOINTS ARE IN COMPLIANCE WITH THE CONSTRUCTION DOCUMENTS.
- D. TO VERIFY THAT ALL DOWELS, ANCHOR BOLTS, EMBED PLATES, INSERTS, AND ANY OTHER DETAILS OF ANCHORAGE TO MASONRY ARE SECURED IN PLACE.
- E. TO VERIFY TYPE, SIZE AND LOCATION OF STRUCTURAL ELEMENTS INCLUDING DETAILS OF ANCHORAGE OF MASONRY TO STRUCTURAL MEMBERS, FRAMES OR OTHER CONSTRUCTION.
- F. TO VERIFY PROTECTION OF MASONRY DURING COLD WEATHER (TEMPERATURE BELOW 40 F) OR HOT WEATHER (TEMPERATURE ABOVE 90 F).

9.4 THE STRUCTURAL OBSERVER SHALL VISIT THE STRUCTURAL MASONRY CONSTRUCTION IN PROGRESS AT SIGNIFICANT STAGES TO OBSERVE THE FOLLOWING:
- A. ESTABLISH CONFORMITY TO FOUNDATION PLANS AND REINFORCEMENT PROVISIONS FOR WALL / PILASTER STARTERS.
- B. INITIAL REINFORCEMENT LAYOUT - BOUNDARY / CORNER ELEMENTS, WALL JOINTS AND JOINT REINFORCEMENTS.
- C. CLEANOUT AND GROUT SPACE PROVISIONS.
- D. LOAD PATH - INCLUDING SPECIAL REINFORCEMENT DETAILS IN OPENINGS AND SEISMIC REQUIREMENTS.
- E. WALL ANCHORAGE TO FLOORS AND ROOF.
- F. EMBEDMENT AND CONNECTION DETAILS FOR SEISMIC-FORCE-RESISTING SYSTEM AND OTHER STRUCTURAL ELEMENTS.
- G. PRESTRESSING TENDON PLACEMENT, SEQUENCE AND PROCEDURES FOR STRESSING THE BONDED TENDONS (ACI 530 / ASCE 5/TMS 402).

10 LIGHT FRAMED CONSTRUCTION (Section 1704.2.5 and 1705.5)

10.1 SHOP FABRICATED ASSEMBLIES (SECTION 1704.2) THE SPECIAL INSPECTOR SHALL VERIFY THE QUALITY AND WORKMANSHIP FOR THE FABRICATION OF STRUCTURAL LOAD-BEARING MEMBERS AND ASSEMBLIES. THE SPECIAL INSPECTOR SHALL REVIEW THE FABRICATOR'S DETAILED FABRICATION AND QUALITY CONTROL PROCEDURES FOR COMPLETENESS AND ADEQUACY. APPROVAL TO WAIVER SPECIAL INSPECTION REQUIREMENTS OF FABRICATED MEMBERS SHALL BE BASED ON REVIEW OF THE FABRICATOR'S WRITTEN AND PROCEDURAL QUALITY CONTROL MANUALS AND PERIODIC AUDITING OF FABRICATION PRACTICES BY AN APPROVED SPECIAL INSPECTION AGENCY.

10.2 SITE FABRICATED ASSEMBLIES (SECTION 1705.5) THE SPECIAL INSPECTOR SHALL INSPECT THE WOOD STRUCTURAL PANEL SHEATHING OF HIGH-LOAD DIAPHRAGMS TO ASCERTAIN WHETHER IT IS OF THE GRADE AND THICKNESS SHOWN ON THE APPROVED BUILDING PLANS. HE MUST VERIFY THE NOMINAL SIZE OF FRAMING MEMBERS AT ADJOINING PANEL EDGES, THE NAIL OR STAPLE DIAMETER AND LENGTH, THE NUMBER OF FASTENER LINES AND THAT THE SPACING BETWEEN FASTENERS IN EACH LINE AND AT EDGE MARGINS AGREES WITH THE APPROVED BUILDING PLANS.

10.3 STRUCTURAL WOOD (Section 1705.12.2)

10.3.1 THE SPECIAL INSPECTOR SHALL PROVIDE PERIODIC INSPECTION TO VERIFY THE MATERIALS FOR CONSTRUCTION FOR COMPONENTS WITHIN THE SEISMIC-FORCE-RESISTING SYSTEM AS FOLLOWS:
- A. NAILING, BOLTING, ANCHORING, AND OTHER FASTENING OF COMPONENTS
- B. LUMBER SIZES, GRADING, ADHESIVES AND PRESERVATIVES USED.
- C. IDENTIFICATION OR QUALITY MARK ON PRESERVATIVE-TREATED WOOD BY AN ACCREDITED INSPECTION AGENCY, COMPLYING WITH REQUIREMENTS OF THE AMERICAN LUMBER STANDARDS TREATED WOOD PROGRAM.
- D. MOISTURE CONTENT AND LUMBER SPLITS.
- E. SURFACE TREATMENT FOR PROPER PRESERVATIVE, SEALER, PRIME AND PAINT.
- F. CAMBER.

10.3.2 CONTINUOUS SPECIAL INSPECTION IS REQUIRED DURING FIELD GLUING OPERATIONS OF ELEMENTS OF SEISMIC-FORCE-RESISTING SYSTEM.

10.4 COLD-FORMED STEEL MEMBERS (SHOWN ON 1705.12.3 AND 2210)

10.4.1 THE SPECIAL INSPECTOR SHALL VERIFY THE MATERIALS FOR CONSTRUCTION AS FOLLOWS:
- A. PHYSICAL PROPERTIES (GRADE, TYPE AND QUALITY), STUDS AND TRACK SIZES, LENGTH OF WEB, FLANGES, RETURN LIPS AND GAGE (STEEL SHEET) THICKNESS
- B. METALLIC COATING DESIGNATION, COLOR OR PROTECTIVE COATING (GALVANIZED PER ASTM A 1003).
- C. MECHANICAL PROPERTIES, YIELD STRENGTH, PRODUCT DESIGNATE, AND MANUFACTURER.
- D. FASTENERS, PINS AND INSTALLATION SCREWS (WITH PROTECTIVE COATING WHEN SPECIFIED) FOR SCREW SHEAR, PULL-OUT REQUIREMENTS, DIAMETER, AND POINT STYLE IN RELATION TO COMBINED THICKNESS OF ALL CONNECTED STEEL FRAME MEMBERS.

10.5 CONSTRUCTION (SECTION 1705.2, 1705.11.2, 1705.12.3, 2210, 2304 AND 2308)

10.5.1 THE SPECIAL INSPECTOR SHALL PROVIDE PERIODIC INSPECTION TO VERIFY THE FOLLOWING FOR COMPLIANCE TO APPROVED PLANS AND CODE REQUIREMENTS:
- A. ROOF DIAPHRAGM TO BLOCKING OR TOP TRACK FASTENER SIZE AND SPACING.
- B. FIELD INSTALLATION AND CONNECTION DETAILS, NAILING, BOLTING, ANCHORING, DRILLING, CUTTING, NOTCHING, BLOCKING AND BRIDGING.
- C. INSTALLATION AND LOCATION OF DRAG STRUT, DIAPHRAGM COLLECTOR, BRACES, ANCHORS AND HOLD DOWNS.
- D. FRAMING SHEAR WALL PANEL TYPE / GRADE INCLUDING PANEL LAYOUT, SHEAR WALL LENGTH, PANEL THICKNESS AND GRADE, STUD SIZE AND GRADE / TYPE, SPACING, AND NAILING / FASTENING CONDITIONS.
- E. SHEAR WALL (BOUNDARY AND FIELD) FASTENING DETAILS.
- F. OPENING / PENETRATION LOCATIONS AND REQUIREMENTS FOR SUPPLEMENTAL STRAPPING WITH BLOCKING.
- G. ACCEPTABILITY OF BLOCKING FIT, CONNECTION, SIZE, LOCATION AND ORIENTATION.
- H. SHINERS (NAILS PENETRATING STRUCTURAL PANEL SHEATHING ONLY).
- I. STORAGE AND CUTTING OF LUMBER.
- J. WELDING AND FRAMING CONSTRUCTION FOR PROPER FIT OF JOINTS AND CONNECTIONS.
- K. CONNECTION HARDWARE - SUCH AS STRAPS, ANGLES, HANGERS, FRAMING CLIPS AND FASTENERS (NAIL, BOLT, LAG, OR SCREW) FOR COMPLIANCE WITH SPACING, EDGE DISTANCE, SIZE PENETRATION, AND GAGE REQUIREMENTS.

10.6 THE STRUCTURAL OBSERVER SHALL VISIT THE LIGHT FRAMED (WOOD AND/OR LIGHT GAGE STEEL) BUILDING CONSTRUCTION IN PROGRESS AT SIGNIFICANT STAGES TO OBSERVE THE FOLLOWINGS:
- A. ESTABLISH CONFORMITY TO FOUNDATION PLANS.
- B. HOLDOWN AND SILL ANCHORAGE ASSEMBLY.
- C. LOAD PATHS (VERTICAL AND HORIZONTAL) - SHEAR TRANSFERS, DIAPHRAGMS, SPECIAL ASSEMBLAGES, DRAG TIES AND STRUTS.
- D. BLOCKING, BRACING AND BRIDGING.
- E. PLUMBING / MECHANICAL INSTALLATIONS AND STRUCTURAL INTEGRITY.

11 DESIGNATED SEISMIC SYSTEMS AND OTHER BUILDING SYSTEM COMPONENTS

11.1 DESIGNATED SEISMIC SYSTEM: (THOSE ARCHITECTURAL, ELECTRICAL, AND MECHANICAL SYSTEMS AND THEIR COMPONENTS THAT REQUIRE DESIGN IN ACCORDANCE WITH CHAPTER 13 OF ASCE 7 AND FOR WHICH THE COMPONENT IMPORTANCE FACTOR, IP, IS GREATER THAN 1.0.

11.1.2 SEISMIC QUALIFICATION OF MECHANICAL AND ELECTRICAL EQUIPMENT. (SECTION 1705.13.2). THE RDP IN RESPONSIBLE CHARGE SHALL STATE THE APPLICABLE SEISMIC QUALIFICATION REQUIREMENTS FOR DESIGNATED SEISMIC SYSTEMS ON THE CONSTRUCTION DOCUMENTS.

11.1.3 DESIGNATED SEISMIC SYSTEM VERIFICATION. (SECTION 1705.13.3). THE SPECIAL INSPECTOR SHALL EXAMINE DESIGNATED SEISMIC SYSTEMS REQUIRING SEISMIC QUALIFICATION IN ACCORDANCE WITH SECTION 1705.13.2 AND VERIFY THAT THE LABEL, ANCHORAGE OR MOUNTING CONFORMS TO THE CERTIFICATE OF COMPLIANCE.

11.1.4 THE SPECIAL INSPECTOR SHALL PROVIDE PERIODIC INSPECTION TO VERIFY THE FOLLOWING FOR COMPLIANCE TO APPROVED PLANS AND CODE REQUIREMENTS:
- A. THE ANCHORAGE OF ACCESS FLOORS AND STORAGE RACKS 8 FEET (2438 MM) OR GREATER IN HEIGHT IN STRUCTURES ASSIGNED TO SEISMIC DESIGN CATEGORY D, E OR F. (SECTION 1705.12).
- B. ERECTION AND FASTENING OF EXTERIOR CLADDING, INTERIOR AND EXTERIOR NONBEARING WALLS AND INTERIOR AND EXTERIOR VENEER IN STRUCTURES ASSIGNED TO SEISMIC DESIGN CATEGORY D, E OR F. (SECTION 1705.12.5).
- C. ANCHORAGE OF ELECTRICAL EQUIPMENT FOR EMERGENCY OR STANDBY POWER SYSTEMS IN STRUCTURES ASSIGNED TO SEISMIC DESIGN CATEGORY C, D, E OR F. (SECTION 1705.12.6).
- D. ANCHORAGE OF OTHER ELECTRICAL EQUIPMENT IN STRUCTURES ASSIGNED TO SEISMIC DESIGN CATEGORY E OR F. SECTION 1705.12.6).
- E. PIPING SYSTEMS INTENDED TO CARRY FLAMMABLE, COMBUSTIBLE OR HIGHLY TOXIC CONTENTS AND THEIR ASSOCIATED MECHANICAL UNITS IN STRUCTURES ASSIGNED TO SEISMIC DESIGN CATEGORY C, D, E OR F. (SECTION 1705.12.6).
- F. HVAC DUCTWORK THAT WILL CONTAIN HAZARDOUS MATERIALS IN STRUCTURES ASSIGNED TO SEISMIC DESIGN CATEGORY C, D, E OR F. (SECTION 1705.12.6).
- G. VIBRATION ISOLATION SYSTEMS OF EQUIPMENT IN STRUCTURES ASSIGNED TO SEISMIC DESIGN CATEGORY C, D, E OR F WHERE THE CONSTRUCTION DOCUMENTS REQUIRE A NOMINAL CLEARANCE OF 0.25 INCHES (6.4 MM) OR LESS BETWEEN THE EQUIPMENT SUPPORT FRAME AND RESTRAINT. (SECTION 1705.12.6).

11.1.5 SEISMIC ISOLATION SYSTEMS: PERIODIC SPECIAL INSPECTION IS REQUIRED DURING THE FABRICATION AND INSTALLATION OF ISOLATOR UNITS AND ENERGY DISSIPATION DEVICES THAT ARE PART OF THE SEISMIC ISOLATION SYSTEM OF THE BUILDING. THE COMPLETED SYSTEM SHALL BE TESTED PER SECTION 17.8 OF ASCE 7.

11.1.6 OTHER BUILDING SYSTEMS FOR SPECIAL INSPECTION REQUIREMENTS FOR SPRAYED-ON, MASTIC AND INTUMESCENT FIRE-RESISTING COATINGS; EXTERIOR INSULATION AND FINISH SYSTEMS; SMOKE CONTROL SYSTEMS; AND OTHER SPECIAL CASES, SEE 1704.10 THROUGH 1705.14.

12 REFERENCES

1. 2022 CALIFORNIA BUILDING CODE, INTERNATIONAL CODE COUNCIL.
2. BUILDING CODE REQUIREMENTS FOR STRUCTURAL CONCRETE, (ACI 318-19), AMERICAN CONCRETE INSTITUTE.
3. BUILDING CODE REQUIREMENTS FOR MASONRY STRUCTURES, (TMS 402/602), THE MASONRY SOCIETY.
4. STRUCTURAL WELDING CODE - STEEL (D1.1-15), AMERICAN WELDING SOCIETY.
5. STRUCTURAL WELDING CODE - SHEET STEEL (D1.3-08), AMERICAN WELDING SOCIETY.
6. STRUCTURAL WELDING CODE - REINFORCING STEEL (D1.4-11), AMERICAN WELDING SOCIETY.
7. STRUCTURAL WELDING CODE - SEISMIC WELDING SUPPLEMENT (D1.8 -16), AMERICAN WELDING SOCIETY.
8. MINIMUM DESIGN LOADS FOR BUILDINGS AND OTHER STRUCTURES (ASCE 7-16), AMERICAN SOCIETY OF CIVIL ENGINEERS
9. AISC 360-16, SPECIFICATION FOR STRUCTURAL STEEL BUILDINGS, AMERICAN INSTITUTE FOR STEEL CONSTRUCTION
10. AISC 341-16, SEISMIC PROVISIONS FOR STRUCTURAL STEEL BUILDINGS (ANSI/AISC 341-16); AMERICAN INSTITUTE FOR STEEL CONSTRUCTION.
11. RCSC 2014 - SPECIFICATION FOR STRUCTURAL JOINTS USING ASTM A 325 OR A490 BOLTS, RESEARCH COUNCIL ON STRUCTURAL CONNECTIONS

7 STEEL CONSTRUCTION (1705.2)

7.1 SUBMITTALS

7.1.1 THE CONTRACTOR SHALL PROVIDE COPIES OF THE SUBMITTALS REVIEWED BY THE RDP TO EACH SPECIAL INSPECTOR

7.1.2 THE SPECIAL INSPECTOR SHALL OBTAIN COPIES OF THE SUBMITTALS AND VERIFY THEY HAVE BEEN REVIEWED BY THE RDP:
- A. SHOP AND ERECTION DRAWINGS.
- B. WELDING PROCEDURE SPECIFICATIONS (WPS).
- C. MANUFACTURER'S MILL CERTIFICATE
- D. MILL TEST REPORTS
- E. CHARPY V-NOTCH (CVN) IMPACT TEST REPORTS
- F. WELDERS CERTIFICATES

7.2 WELDING (IN COMPLIANCE WITH AWS D1.1)

7.2.1 THE SPECIAL INSPECTOR SHALL:
- A. ASCERTAIN THAT ALL FABRICATION AND ERECTION BY WELDING IS PERFORMED IN ACCORDANCE WITH THE REQUIREMENTS OF THE APPROVED CONSTRUCTION DOCUMENTS, THE BUILDING CODE AND AWS STANDARDS.
- B. VERIFY THAT ONLY MATERIALS AND PROCEDURES CONFORMING TO THE REQUIREMENTS OF AWS, AISC OR ASTM, AND SPECIFIED ON APPROVED PLANS ARE USED.
- C. REVIEW ALL WELDING PROCEDURE SPECIFICATION (WPS) AS APPROVED AND FOUND SATISFACTORY BY THE RDP. VISUALLY INSPECT THE PREPARATIONS, WELDING PROCESS, ELECTRODES AND EQUIPMENT USED, FOR COMPLIANCE; AND VERIFY THE VARIABLES ARE WITHIN ESTABLISHED PARAMETERS.
- D. VERIFY THAT INDIVIDUAL QUALIFICATION OF WELDERS, WELDING OPERATORS AND TACK WELDERS ARE CURRENT, AND IN ACCORDANCE WITH THE WORK TO BE PERFORMED.
- E. VERIFY THAT THE FILLER METAL FOR DEMAND CRITICAL WELDS AND ALL WELDS IN MEMBERS AND CONNECTIONS IN THE SEISMIC LOAD RESISTING SYSTEM, AS DESIGNATED IN THE CONTRACT DOCUMENTS, MEETS THE MINIMUM CHARPY V-NOTCH TOUGHNESS REQUIREMENTS. (AWS D1.8).
- F. VISUALLY INSPECT ALL WELDS AND VERIFY THAT ALL DISCONTINUITIES (SUCH AS THOSE CREATED BY ERRORS / FABRICATION / OR ERECTION OPERATIONS) ARE REPAIRED

7.2.2 PERIODIC INSPECTIONS ARE PERMITTED DURING WELDING OF THE FOLLOWING ITEMS, PROVIDED VISUAL INSPECTION IS CONDUCTED PRIOR TO COMPLETION AND/OR SHIPMENT OF SHOP WELDS:
- A. SINGLE-PASS FILLET WELDS NOT EXCEEDING 5/16 IN (7.9MM).
- B. FLOOR AND ROOF DECK WELDING.
- C. WELDED STUDS IN STRUCTURAL DIAPHRAGM OR COMPOSITE SYSTEMS.
- D. WELDED SHEET STEEL FOR COLD-FORMED STEEL FRAMING STUDS AND JOISTS.
- E. STAIR AND RAILING SYSTEMS.

7.2.3 THE SPECIAL INSPECTOR SHALL PROVIDE CONTINUOUS INSPECTION FOR SHOP AND FIELD WELDING PER 1707 AND AISC341. CONTINUOUS INSPECTION IS ALSO REQUIRED FOR SINGLE PASS FILLET WELDS EXCEEDING 5/16" , MULTI-PASS WELDS, GROOVE WELDS, WHERE SPECIFICALLY INDICATED ON DRAWINGS, AND OTHER WELDS NOT LISTED FOR PERIODIC INSPECTION.

7.2.4 EXCEPT FOR SPECIAL MOMENT-RESISTING FRAMES, SPECIAL CONCENTRIC BRACED FRAMES, OR ECCENTRICALLY BRACED FRAMES, SPECIAL INSPECTIONS ARE NOT REQUIRED WHERE THE WORK IS PERFORMED ON THE PREMISES OF A FABRICATOR CURRENTLY REGISTERED AND APPROVED BY THE BUILDING OFFICIAL TO PERFORM SUCH WORK WITHOUT SPECIAL INSPECTION PER SECTION 1704.2 OF THE CBC, UNLESS OTHERWISE REQUIRED BY THE RDP.

7.2.5 PROVIDE NON-DESTRUCTIVE TESTING FOR FULLY RESTRAINED CONNECTIONS BY ULTRASONIC TESTING OR BY RADIOGRAPHY, UNLESS REQUIRED OTHERWISE IN AWS D1.1 OR AS SPECIFIED BY THE RDP:
- A. COMPLETE JOINT PENETRATION GROOVE WELDS.
- B. PARTIAL PENETRATION GROOVE WELDS IN COLUMN SPLICES.
- C. BASE METAL THICKER THAN 1-1/2 INCHES (38MM) WHERE SUBJECT TO THROUGH-THICKNESS WELD-SHRINKAGE STRAINS.
- D. OTHER NON-DESTRUCTIVE TESTING AS REQUIRED BY AISC 341 AND THE RDP.

7.2.6 REQUIRED VERIFICATION AND INSPECTION FOR STEEL CONSTRUCTION AS DETAILED IN AISC 360, TABLES N4 AND N5.

7.3 HIGH STRENGTH BOLTING

7.3.1 HIGH STRENGTH BOLTING SHALL BE INSTALLED IN ACCORDANCE WITH THE " SPECIFICATIONS FOR STRUCTURAL JOINTS USING ASTM A325 OR A490 BOLTS" AS APPROVED BY THE RESEARCH COUNCIL ON STRUCTURAL CONNECTIONS (RCSC), UNLESS OTHERWISE NOTED ON THE APPROVED PLANS AND SPECIFICATIONS.

7.3.2 THE SPECIAL INSPECTOR SHALL:
- A. DETERMINE THAT THE SPECIFIED REQUIREMENTS FOR BOLTS, NUTS, WASHERS AND PAINT; BOLTED PARTS; INSTALLATION AND TIGHTENING STANDARDS ARE MET.
- B. OBSERVE THE PRE-INSTALLATION TESTING AND CALIBRATION PROCEDURES (WHEN SUCH PROCEDURES ARE REQUIRED OR SPECIFIED). THE CALIBRATED WRENCH TIGHTENING INSTALLATION PROCEDURE SHALL BE CALIBRATED DAILY FOR EACH BOLT DIAMETER, LENGTH AND GRADE USING FASTENER ASSEMBLIES THAT ARE BEING INSTALLED.
- C. VERIFY THAT THE SELECTED PROCEDURE FOR INSTALLATION IS PROPERLY USED TO TIGHTEN BOLTS, AND TO ACHIEVE THE REQUIRED PRETENSION (WHEN SPECIFIED).

7.3.3 IN BOLTED CONNECTIONS THAT ARE SLIP-CRITICAL OR REQUIRE PRETENSIONING, THE SPECIAL INSPECTOR SHALL DETERMINE THAT FAYING SURFACE BETWEEN BOLTS ARE FREE OF PAINT OR ZINC-COATING, UNLESS QUALIFIED / TESTED IN ACCORDANCE WITH THE 2004 RCSC SPECIFICATION APPENDIX A AND APPROVED BY THE RDP.

7.3.4 SNUG-TIGHT AND PRETENSIONED BEARING CONNECTIONS, IDENTIFIED AS NOT BEING SLIP-CRITICAL NEED NOT BE INSPECTED FOR BOLT TENSION, OTHER THAN TO ENSURE THAT ALL PLIES OF THE CONNECTED MATERIALS HAVE BEEN DRAWN TOGETHER IN FIRM CONTACT.

7.3.5 PERIODIC INSPECTION FOR BOLTED CONNECTIONS MAY BE PERFORMED IN ACCORDANCE WITH AISC SPECIFICATIONS AND SECTION 1704.3.3.2 OF THE CBC, INCLUDING:
- A. THE TURN-OF-NUT METHOD WITH MATCH-MARKING TECHNIQUES.
- B. THE DIRECT TENSION INDICATOR METHOD.
- C. THE ALTERNATE DESIGN FASTENERS (TWIST-OFF BOLTS).
- D. JOINTS DESIGNATED AS SNUG TIGHT.

7.3.6 THE SPECIAL INSPECTOR SHALL PROVIDE CONTINUOUS MONITORING FOR :
- A. TURN-OF-NUT METHOD WITHOUT MATCH-MARKING.
- B. PRETENSIONING USING THE CALIBRATED WRENCH METHOD

7.4 THE STRUCTURAL OBSERVER SHALL VISIT THE STEEL CONSTRUCTION IN PROGRESS AT SIGNIFICANT STAGES TO OBSERVE THE FOLLOWINGS:
- A. ESTABLISH CONFORMITY OF FOUNDATION PLANS.
- B. ANCHORAGE / STRUCTURAL CONNECTION TO FOUNDATION PROVISIONS.
- C. FRAMING CONNECTORS - WELDING / BOLTING SEQUENCE AND PROCEDURES.
- D. ALIGNMENT OF FRAMING MEMBERS, FLANGES AND STIFFENERS.
- E. LOAD PATHS
- F. ROUNDED CORNERS AT COPES AND CUTOUTS IN FRAMING MEMBERS.
- G. REPAIR REQUIREMENTS, PROCEDURES, AND RESOLUTION OF DEFICIENCIES.
- H. SLIP CRITICAL BOLTING - SEQUENCE, DETAILS AND PROCEDURES.
- I. COMPLIANCE WITH APPROVED WELDING SEQUENCE AND PROCEDURES, TO REDUCE RESIDUAL STRESSES IN THE STEEL FRAMES.
- J. FIT UP AND ALIGNMENT OF STEEL ELEMENTS IN THE STRUCTURAL SYSTEM.

7.4.1 FOR MORE DETAILED GUIDELINES, SEE SEAOSC STEEL COMMITTEES RULES OF THUMB FOR STRUCTURAL STEEL BUILDINGS (COCHRAN & MARINIAN; MARCH 2005).

8 CONCRETE CONSTRUCTION (Table 1705.3 and ACI 318)

8.1 THE SPECIAL INSPECTOR SHALL PROVIDE CONTINUOUS INSPECTION AS FOLLOWS:
- A. DURING THE PLACEMENT OF REINFORCEMENT AND CONCRETE IN SEISMIC FORCE RESISTING MOMENT FRAMES AND SEISMIC SYSTEMS IN STRUCTURES ASSIGNED TO SEISMIC DESIGN CATEGORIES C, D, E AND F IN ACCORDANCE WITH SECTION 1916, AND ALL STRUCTURES CONSTRUCTED IN WIND EXPOSURE CATEGORIES A, B, C, AND D (AS REQUIRED IN SECTION 1706).
- B. DURING PNEUMATIC APPLIED CONCRETE FOR REPAIRS AND SEISMIC STRENGTHENING OF BUILDINGS AND STRUCTURES.
- C. PRIOR TO AND DURING THE INSTALLATION OF ADHESIVE / GROUTED ANCHORS AND EMBEDMENTS.
- D. DURING THE MOLDING OR CONSTRUCTION OF CONCRETE TEST CYLINDERS, BEAMS, CORES, OR PANELS FOR SHOTCRETE CORES.
- E. DURING PLACEMENT OF REINFORCING STEEL AND CONCRETE FOR DRILLED PILES OR CAISSONS.
- F. DURING THE APPLICATION OF PRESTRESSING FORCES AND GROUTING OF TENDONS IN THE SEISMIC-FORCE-RESISTING SYSTEM.
- G. PRIOR TO AND DURING THE PLACEMENT OF CONCRETE AROUND ANCHOR BOLTS.

8.2 THE SPECIAL INSPECTOR SHALL PROVIDE PERIODIC INSPECTION AS FOLLOWS:
- A. AT THE START AND DURING EACH PHASE OF THE PROJECT TO ASCERTAIN PROPOSED CONFORMITY OF MATERIALS, PERSONNEL QUALIFICATIONS AS REQUIRED, AND PROCEDURES WITH THE APPLICABLE CODES, PLANS AND SPECIFICATIONS.
- B. ANCHORAGES FOR EQUIPMENT AND NON-STRUCTURAL COMPONENTS IN STRUCTURES ASSIGNED TO SEISMIC DESIGN CATEGORY C, D, E OR F (REQUIRED BY SECTION 1707).
- C. REINFORCEMENT AND TENDON PROFILE VERIFICATION PRIOR TO CLOSING OF FORMS OR THE DELIVERY OF CONCRETE TO THE JOB SITE.
- D. DURING THE PLACEMENT OF CONCRETE ONLY WHERE PERMITTED BY CODE AND ACI 318)
- E. AT SUCH FREQUENCY AS NECESSARY TO CLEARLY CONFIRM THE PLACEMENT OF TIES, HOOPS, STIRRUPS, CONNECTIONS, AND ANY ADDITIONAL SPECIFIED REINFORCEMENT (I.E. AT OPENINGS, BEAMS, CORNERS, COLUMNS, PIERS AND CAISSONS) BEFORE THEY ARE COVERED.
- F. DURING SAMPLING OF CONCRETE AT DISCHARGE FROM MIXER.
- G. VERIFICATION OF DELIVERED MIX DESIGN BEFORE ANY CONCRETE IS PLACED.
- H. VERIFICATION OF THE TRAVEL TIME AND ROTATIONS OF THE DRUM OF THE DELIVERED MIX BEFORE ANY CONCRETE IS PLACED. (ASTM C94)
- I. MAINTENANCE OF SPECIFIED / APPROVED CURING TEMPERATURE AND TECHNIQUES.
- J. FABRICATION AND PLACING OF PRECAST CONCRETE MEMBERS.

8.3 THE STRUCTURAL OBSERVER SHALL VISIT THE REINFORCED / COMPOSITE CONCRETE CONSTRUCTION IN PROGRESS AT SIGNIFICANT STAGES TO OBSERVE THE FOLLOWING:
- A. ESTABLISH CONFORMITY TO FOUNDATION PLANS - ANCHORAGE AND STARTER REINFORCEMENTS FOR COLUMNS, WALLS AND MOMENT FRAMES.
- B. LOAD PATH AND REINFORCEMENT LAYOUT - TOLERANCE, SPACING, SPLICES AND CONTINUITY IN SHEAR / MOMENT REINFORCEMENTS FOR SEISMIC REQUIREMENTS.
- C. SPECIAL REINFORCEMENT DETAILS IN MOMENT FRAMES / SHEAR WALLS AND CONNECTIONS.
- D. REINFORCEMENTS INFLUENCED BY EMBEDMENTS, OPENINGS AND MECHANICAL SERVICES PENETRATIONS.
- E. PRESTRESSING TENDON AND POST TENSIONING DUCT PLACEMENTS, SEQUENCE AND PROCEDURES FOR STRESSING THE CABLES.

4 SPECIAL INSPECTIONS

4.1 THE SPECIAL INSPECTOR OR INSPECTION AGENCY RETAINED FOR CONDUCTING INSPECTIONS SHALL NOT BE EMPLOYED DIRECTLY OR INDIRECTLY BY THE CONTRACTOR.

4.2 ALTERNATE INSPECTORS ARE ALLOWED, BUT ONLY WITH THE PRIOR WRITTEN APPROVAL OF THE BUILDING OFFICIAL AND THE RDP. ACCREDIDATION TO ASTM E-329-2003 (OR LATEST VERSION), STANDARD SPECIFICATIONS FOR AGENCIES ENGAGED IN THE TESTING AND/OR INSPECTION OF MATERIALS USED IN CONSTRUCTION, IS PREFERRED.

4.3 THE SPECIAL INSPECTOR SHALL NOTIFY THE BUILDING OFFICIAL PRIOR TO INSPECTION COMMENCEMENT, DOCUMENT INSPECTION RECORDS AND FURNISH THEM TO THE BUILDING OFFICIAL AND TO THE RDP IN RESPONSIBLE CHARGE. INTERIM REPORTS WILL BE SUBMITTED AT A FREQUENCY DEFINED ON THE STATEMENT OF SPECIAL INSPECTIONS. (REF 1704.2.4).

4.4 THE INSPECTION REPORT SHALL INDICATE THAT THE WORK INSPECTED WAS DONE IN CONFORMANCE TO APPROVED CONSTRUCTION DOCUMENTS INCLUDING, BUT NOT LIMITED TO THE FOLLOWINGS:
- A. PROJECT ADDRESS.
- B. PERMIT NUMBER AND THE AUTHORITIES HAVING JURISDICTION.
- C. NAME AND ADDRESS (PHONE AND E-MAIL) OF RDP IN RESPONSIBLE CHARGE. OR
- D. OWNER'S AGENT RELEVANT TO THE WORK.
- E. DATE OF INSPECTION AND HOURS WORKED.
- F. DESCRIPTION OF INSPECTIONS PERFORMED, APPLICABLE STANDARD, AND LOCATION (BUILDING ID, GRID LINES, AND ELEVATION OR FLOOR LEVEL).
- G. STATEMENT THAT THE WORK INSPECTED CONFORMS TO APPROVED PLANS AND SPECIFICATIONS.
- H. LIST OF DISCREPANCIES, UNRESOLVED DEVIATIONS, AND EXCLUSIONS OR ADDITIONS TO APPROVED PLANS AND SPECIFICATIONS AUTHORIZED BY THE RDP.
- I. CORRECTIONS TO PREVIOUSLY LISTED ITEMS.
- J. LIST OF TEST SPECIMENS TAKEN, TEST RESULTS AND MILL CERTIFICATIONS RECEIVED.
- K. NAME, INSPECTION LICENSE OR IDENTIFICATION NUMBER, AND SIGNATURE OF SPECIAL INSPECTOR PERFORMING THE INSPECTION.

4.5 ALL DISCREPANCIES SHALL BE BROUGHT TO THE IMMEDIATE ATTENTION OF THE CONTRACTOR FOR CORRECTION, THEN, IF UNCORRECTED, TO THE BUILDING OFFICIAL AND TO THE RDP (REF 1704.2.4)

4.6 TEST AND INSPECTION REPORTS SHALL BE SUBMITTED WITHIN FIVE (5) WORKING DAYS OF THE PROVISION OR OBTAINING THE RESULTS OF THE TEST.

4.7 DEVIATION LOG: EACH SPECIAL INSPECTOR SHALL MAINTAIN A LOG OF WORK THAT DOES NOT MEET THE REQUIREMENTS OF THE CONSTRUCTION DOCUMENTS. THIS DEVIATION LOG SHALL INCLUDE REFERENCE TO THE ORIGINAL TEST, INSPECTION, OR OBSERVATION REPORT, THE SUBSEQUENT DATES OF RE-INSPECTION OR RETESTING, AND THE DATE THE CORRECTED WORK WAS VERIFIED TO BE IN CONFORMANCE WITH THE REQUIREMENTS OF THE CONSTRUCTION DOCUMENTS. THE DEVIATION LOG SHALL BE UPDATED DAILY AND SUBMITTED AT MONTHLY INTERVALS (1704.2.4)

4.8 UPON COMPLETION OF THE PROJECT, EACH SPECIAL INSPECTOR SHALL SUBMIT A FINAL REPORT TO THE RDP AND THE BUILDING OFFICIAL, STATING THAT THE WORK REQUIRING SPECIAL INSPECTIONS WAS COMPLETED IN SUBSTANTIAL CONFORMANCE TO THE APPROVED PLANS, SPECIFICATIONS AND THE APPLICABLE PROVISIONS OF THE CODE. ANY WORK NOT IN COMPLIANCE SHALL BE DESCRIBED IN THE REPORT (REF 1704.2.4).

5 STRUCTURAL OBSERVATION (1704)

5.1 THE PURPOSE OF STRUCTURAL OBSERVATION (WHERE REQUIRED) IS TO ENSURE THAT THE STRUCTURAL SYSTEM THAT PROVIDES LATERAL FORCE RESISTANCE IS CONSTRUCTED IN GENERAL CONFORMANCE WITH CONSTRUCTION DOCUMENTS. (1704.6)

5.2 STRUCTURAL OBSERVATION IS REQUIRED FOR THOSE STRUCTURES INCLUDED IN SEISMIC DESIGN CATEGORY D, E, OR F, AS DETERMINED IN SECTION 1613, WHERE ONE OR MORE OF THE FOLLOWING CONDITIONS EXIST:
- A. CLASSIFIED IN EITHER RISK CATEGORY III (HIGH OCCUPANCY) OR IV (ESSENTIAL FACILITIES)
- B. HEIGHT OF STRUCTURE IS G

TABLE 1705.6
REQUIRED VERIFICATION AND INSPECTION OF SOILS

	TYPE	FREQUENCY CONT.	FREQUENCY PERIODIC
1.	VERIFY MATERIALS BELOW SHALLOW FOUNDATION ARE ADEQUATE TO ACHIEVE THE DESIGN BEARING CAPACITY.	---	X
2.	VERIFY EXCAVATIONS ARE EXTENDED TO PROPER DEPTH AND HAVE REACHED PROPER MATERIAL.	---	X
3.	PERFORM CLASSIFICATION AND TESTING OF COMPACTED FILL MATERIALS.	---	X
4.	DURING FILL PLACEMENT, VERIFY USE OF PROPER MATERIALS AND PROCEDURES IN ACCORDANCE WITH THE PROVISIONS OF THE APPROVED GEOTECHNICAL REPORT. VERIFY DENSITIES AND LIFT THICKNESS DURING PLACEMENT AND COMPACTION OF COMPACTED FILL.	X	---
5.	PRIOR TO PLACEMENT OF COMPACTED FILL, INSPECT SUBGRADE AND VERIFY THAT SITE HAS BEEN PREPARED PROPERLY.	---	X

TABLE 1705.7
REQUIRED VERIFICATION AND INSPECTION OF DRIVEN DEEP FOUNDATION ELEMENTS

	TYPE	FREQUENCY CONT.	FREQUENCY PERIODIC
1.	VERIFY ELEMENT MATERIALS, SIZES AND LENGTHS COMPLY WITH THE REQUIREMENTS.	X	---
2.	DETERMINE CAPACITIES OF TEST ELEMENTS AND CONDUCT ADDITIONAL LOAD TESTS, AS REQUIRED.	X	---
3.	INSPECT DRIVING OPERATIONS AND MAINTAIN COMPLETE AND ACCURATE RECORDS FOR EACH ELEMENT.	X	---
4.	VERIFY PLACEMENT LOCATIONS AND PLUMBNESS, CONFIRM TYPE AND SIZE OF HAMMER, RECORD NUMBER OF BLOWS PER FOOT OF PENETRATION, DETERMINE REQUIRED PENETRATIONS TO ACHIEVE DESIGN CAPACITY, RECORD TIP AND BUTT ELEVATIONS AND DOCUMENT ANY DAMAGE TO FOUNDATION ELEMENT.	X	---
5.	FOR STEEL ELEMENTS, PERFORM ADDITIONAL INSPECTIONS IN ACCORDANCE WITH SECTION 1705.2	IN ACCORDANCE WITH SECTION 1705.2	
6.	FOR CONCRETE ELEMENTS AND CONCRETE-FILLED ELEMENTS, PERFORM TESTS AND ADDITIONAL SPECIAL INSPECTIONS IN ACCORDANCE WITH SECTION 1705.3	IN ACCORDANCE WITH SECTION 1705.3	
7.	FOR SPECIALTY ELEMENTS, PERFORM ADDITIONAL INSPECTIONS AS DETERMINED BY THE REGISTERED DESIGN PROFESSIONAL IN RESPONSIBLE CHARGE.	IN ACCORDANCE WITH STATEMENT OF SPECIAL INSPECTIONS	

TABLE1705.8
REQUIRED VERIFICATION AND INSPECTION OF CAST-IN-PLACE DEEP FOUNDATION ELEMENTS

	TYPE	FREQUENCY CONT.	FREQUENCY PERIODIC
1.	INSPECT DRILLING OPERATIONS AND MAINTAIN COMPLETE AND ACCURATE RECORDS FOR EACH ELEMENT.	X	---
2.	VERIFY PLACEMENT LOCATIONS AND PLUMBNESS, CONFIRM PIER DIAMETERS, BELL DIAMETERS (IF APPLICABLE), LENGTHS, EMBEDMENT INTO BEDROCK (IF APPLICABLE) AND ADEQUATE END BEARING STRATA CAPACITY. RECORD CONCRETE OR GROUT VOLUMES.	X	---
3.	FOR CONCRETE ELEMENTS, PERFORM TESTS AND ADDITIONAL SPECIAL INSPECTIONS IN ACCORDANCE WITH SECTION 1705.3.	IN ACCORDANCE WITH SECTION 1705.3	

SPECIAL PROVISIONS FOR SEISMIC RESISTANCE IN OTHER BUILDING SYSTEMS

	TYPE	FREQUENCY CONT.	FREQUENCY PERIODIC
	DESIGNATED SEISMIC SYSTEMS		
1.	EXAMINE DESIGNATED SEISMIC SYSTEMS REQUIRING SEISMIC QUALIFICATION AND VERIFY THAT THE LABEL, ANCHORAGE OR MOUNTING CONFORMS TO THE CERTIFICATE OF COMPLIANCE	---	X

SECTION 1707.8
MECHANICAL & ELECTRICAL COMPONENTS

1.	ANCHORAGE OF ELECTRICAL EQUIPMENT FOR EMERGENCY OR STANDBY POWER SYSTEMS IN STRUCTURES ASSIGNED TO SEISMIC DESIGN CATEGORY C, D, E OR F.	---	X
2.	ANCHORAGE OF OTHER ELECTRICAL EQUIPMENT IN STRUCTURES ASSIGNED TO SEISMIC DESIGN CATEGORY E OR F.	---	X
3.	PIPING SYSTEMS INTENDED TO CARRY FLAMMABLE, COMBUSTIBLE OR HIGHLY TOXIC CONTENTS AND THEIR ASSOCIATED MECHANICAL UNITS IN STRUCTURES ASSIGNED TO SEISMIC DESIGN CATEGORY C, D, E OR F.	---	X
4.	HVAC DUCTWORK THAT WILL CONTAIN HAZARDOUS MATERIALS IN STRUCTURES ASSIGNED TO SEISMIC DESIGN CATEGORY C, D, E OR F.	---	X
5.	VIBRATION ISOLATION SYSTEMS OF EQUIPMENT IN STRUCTURES ASSIGNED TO SEISMIC DESIGN CATEGORY C, D, E OR F WHERE THE CONSTRUCTION DOCUMENTS REQUIRE A NOMINAL CLEARANCE OF 0.25 INCHES (6.4 MM) OR LESS BETWEEN THE EQUIPMENT SUPPORT FRAME AND RESTRAINT	---	X

SEISMIC ISOLATION SYSTEMS

	TYPE	FREQUENCY CONT.	FREQUENCY PERIODIC
1.	INSPECT THE FABRICATION AND INSTALLATION OF ISOLATOR UNITS AND ENERGY DISSIPATION DEVICES THAT ARE PART OF THE SEISMIC ISOLATION SYSTEM OF THE BUILDING	---	X
2.	PERFORM SYSTEM TESTS PER SECTION 17.8 OF ASCE 7.		
	THE FOLLOWING ITEMS ARE NOT GENERALLY ADDRESSED BY THE STRUCTURAL ENGINEER. THEY ARE REQUIREMENTS OF THE BUILDING CODE AND INCLUDED HERE ONLY FOR REFERENCE AND COMPLETENESS.	---	---
	SPRAYED ON FIRE-PROOFING INSPECTIONS & VERIFICATION		
1.	INSPECT SURFACE CONDITIONS, INCLUDING CLEANLINESS OF STEEL, PRIOR TO INSTALLATION	---	X
2.	VERIFY MATERIAL SPECIFICATION, THICKNESS AND DENSITY OF SPRAYED MATERIAL	---	X
3.	VERIFY COHESIVE / ADHESIVE BOND STRENGTH OF APPLICATION BY TESTING PER ASTM E-736.	---	X
	INTUMESCENT FIRE-RESISTIVE COATINGS		
1.	VERIFY MATERIAL SPECIFICATION, THICKNESS AND DENSITY OF SPRAYED MATERIAL	---	---
2.	VERIFY COHESIVE / ADHESIVE BOND STRENGTH OF APPLICATION BY TESTING PER ASTM E-736.	---	---
	EXTERIOR INSULATION AND FINISH SYSTEMS		
1.	INSPECT THICKNESS	---	---
	SMOKE CONTROL SYSTEMS		
1.	RECORD DEVICE LOCATIONS	---	---
2.	TEST LEAKAGE AND PRESSURE DIFFERENTIAL AND FLOW MEASUREMENT	---	---
3.	VERIFY DETECTION AND CONTROL	---	---

NOTATION:
X DENOTES EITHER CONTINUOUS OR PERIODIC INSPECTIONS.
--- DENOTES AN ACTIVITY THAT IS EITHER A ONE TIME ACTIVITY OR ONE WHOSE FREQUENCY IS DEFINED IN SOME OTHER MANNER.

NOTES:
1. ADDITIONAL DETAIL REGARDING INSPECTIONS AND TESTS ARE PROVIDED IN THE PROJECT SPECIFICATIONS AND/OR NOTES ON THE DRAWINGS.

ACI 530, TABLE 3.1.3
LEVEL C REQUIRED VERIFICATION & INSPECTION OF MASONRY CONSTRUCTION

	TYPE	FREQUENCY CONT.	FREQUENCY PERIODIC
	VERIFICATION OF f'_m AND f'_{AAC} IN ORDINANCE WITH SPECIFICATION ARTICLE 1.4 B PRIOR TO CONSTRUCTION AND FOR EVERY 5,000 SQ. FT. (465 SQ. M) DURING CONSTRUCTION.		
	VERIFICATION OF PROPORTIONS OF MATERIALS IN PREMIXED OR PREBLENDED MORTAR, PRESTRESSING GROUT, AND GROUT OTHER THAN SELF-CONSOLIDATING GROUT, AS DELIVERED TO THE PROJECT SITE.		
	VERIFICATION OF SLUMP FLOW AND VISUAL STABILITY INDEX (VSI) AS DELIVERED TO THE PROJECT SITE IN ACCORDANCE WITH SPECIFICATION ARTICLE 1.5 B.1.b.3 FOR SELF-CONSOLIDATING GROUT.		
1.	VERIFY COMPLIANCE WITH THE APPROVED SUBMITTALS	---	X
2.	VERIFY THAT THE FOLLOWING ARE IN COMPLIANCE		
	A. PROPORTIONS OF SITE-MIXED MORTAR, GROUT AND PRESTRESSING GROUT FOR BONDED TENDONS	---	X
	B. GRADE, TYPE, AND SIZE OF REINFORCEMENT AND ANCHOR BOLTS, AND PRESTRESSING TENDONS AND ANCHORAGES.	---	X
	C. PLACEMENT OF MASONRY UNITS AND CONSTRUCTION OF MORTAR JOINTS	---	X
	D. PLACEMENT OF REINFORCEMENT, CONNECTORS, AND PRESTRESSING TENDONS AND ANCHORS	X	---
	E. GROUT SPACE PRIOR TO GROUTING	X	---
	F. PLACEMENT OF GROUT AND PRESTRESSING GROUT FOR BONDED TENDONS	X	---
	G. SIZE AND LOCATION OF STRUCTURAL ELEMENTS	---	X
	H. TYPE, SIZE AND LOCATION OF ANCHORS, INCLUDING OTHER DETAILS OF ANCHORAGE OF MASONRY TO STRUCTURAL MEMBERS, FRAMES OR OTHER CONSTRUCTION.	X	---
	I. WELDING OF REINFORCEMENT	X	---
	J. PREPARATION, CONSTRUCTION AND PROTECTION OF MASONRY DURING COLD WEATHER (TEMPERATURE BELOW 40°F (4.4°C)) OR HOT WEATHER (TEMPERATURE ABOVE 90°F (32.2°C))	---	X
	K. APPLICATION AND MEASUREMENT OF PRESTRESSING FORCE.	X	---
	L. PLACEMENT OF AAC MASONRY UNITS AND CONSTRUCTION OF THIN-BED MORTAR JOINTS	X	---
	M. PROPERTIES OF THIN-BED MORTAR FOR ACC MASONRY	X	---
3.	OBSERVE PREPARATION OF GROUT SPECIMENS, MORTAR SPECIMENS, AND/OR PRISMS	X	---

SECTION 1705.5
LIGHT FRAMED CONSTRUCTION

	TYPE	FREQUENCY CONT.	FREQUENCY PERIODIC
	WOOD CONSTRUCTION		
1.	INSPECT GRADE STAMP ON FRAMING LUMBER, PLYWOOD AND OSB PANELS TO VERIFY LUMBER SPECIES, GRADING, SIZE, MOISTURE CONTENT, SURFACE TREATMENT	---	X
2.	VERIFY CAMBER	---	X
3.	VERIFY NAIL, STAPLE, SCREW, AND BOLT / FASTENER TYPE, GRADE AND LOCATION	---	X
4.	INSPECT WOOD CONNECTIONS INCLUDING NAILING, BOLTING, ANCHOR BOLTS, TIE DOWNS, BEAM HANGERS AND FRAMING ANCHORS.	---	X
5.	INSPECT DETAILS OF WOOD FRAMING INCLUDING FRAMING, MEMBER SIZES, BLOCKING, BRIDGING AND BEARING.	---	X
6.	INSPECT DIAPHRAGMS AND SHEAR WALLS FOR PROPER PANEL THICKNESS AND FASTENER PATTERN	---	X
7.	INSPECT PREFABRICATED WOOD TRUSSES FOR PROPER FABRICATION, INSTALLATION, AND BRACING	---	X
8.	SPECIAL INSPECTION REQUIRED FOR PRE-FABRICATED WOOD STRUCTURAL ELEMENTS AND ASSEMBLIES SHALL BE IN ACCORDANCE WITH SECTION 1704.2	---	X
9.	SITE BUILT ASSEMBLIES SHALL BE SUBJECT TO SPECIAL INSPECTION IN ACCORDANCE WITH SECTION 1704.6	---	X
10.	INSPECT HIGH-LOAD DIAPHRAGMS :	---	X
	A. VERIFY GRADE AND THICKNESS OF SHEATHING.	---	X
	B. VERIFY NOMINAL SIZE OF FRAMING MEMBERS AT ADJOINING PANEL EDGES.	---	X
	C. VERIFY NAIL OR STAPLE DIAMETER AND LENGTH, THE NUMBER OF FASTENER LINES AND THAT THE SPACING BETWEEN FASTENERS IN EACH LINE AND AT EDGE MARGINS AGREES WITH THE CONSTRUCTION DOCUMENTS.	---	X
11.	INSPECT PREFABRICATED WOOD SHEAR PANELS PER THE EVALUATION SERVICE REPORT FOR THE PRODUCT.	---	---
	COLD-FORMED STEEL CONSTRUCTION		
12.	INSPECT CERTIFICATES AND METAL STUD IDENTIFICATION, SECTION PROPERTIES AND FINISH COATING	---	---
13.	INSPECT SIZE & THICKNESS OF MEMBERS	---	X
14.	INSPECT MECHANICAL CONNECTIONS INCLUDING SCREWS, POWDER ACTUATED FASTENERS, BOLTING, ANCHOR BOLTS, TIE-DOWNS, AND ANCHORS;	---	X
15.	VISUALLY INSPECT ALL WELDS	---	X
16.	INSPECT DETAILS OF METAL STUD FRAMING LAYOUT, MEMBER SIZES, BRACING, BRIDGING AND BEARING.	---	X
	SPECIAL PROVISIONS FOR SEISMIC RESISTANCE		
17.	VERIFY MATERIALS AND INSTALLATION DETAILS FOR HOLD-DOWN, STRAP, TIE ROD, ANCHOR; AND (PREFABRICATED) ENGINEERED SYSTEM / STRUCTURAL PANEL SHEATHING	---	X
18.	IDENTIFY LATERAL SYSTEM AND LOAD PATH FOR LOCATION OF PLATES, SHEAR WALLS, DIAPHRAGMS, BRIDGING, BLOCKING, HOLD-DOWN AND STRAPPING.	---	X
19.	INSPECT CONNECTIONS FOR DIAPHRAGM ATTACHMENT, DIAPHRAGM CHORDS, COLLECTORS, BRACING, AND SHEAR WALL ANCHORAGE AND HOLDOWNS	---	X
20.	VERIFY STUD SPACING, BLOCKING, NAILING (FIELD & EDGE); OPENING / PENETRATION TREATMENT AND BOUNDARY ATTACHMENT CONDITIONS	---	X
21.	VISUALLY INSPECT WELDED CONNECTIONS FOR DIAPHRAGM ATTACHMENT, DIAPHRAGM CHORDS, COLLECTORS, AND BRACING	---	X
22.	INSPECT FIELD GLUING OF DIAPHRAGM AND SHEAR WALL ELEMENTS	X	---

SECTION 1705.11
REQUIRED SPECIAL INSPECTIONS FOR WIND RESISTANCE

1.	ROOF CLADDING AND ROOF FRAMING CONNECTIONS	---	X
2.	WALL CONNECTIONS TO ROOF AND FLOOR DIAPHRAGMS AND FRAMING	---	X
3.	VERTICAL WINDFORCE-RESISTING SYSTEMS, INCLUDING BRACED FRAMES, MOMENT FRAMES AND SHEAR WALLS	---	X
4.	WINDFORCE-RESISTING SYSTEM CONNECTIONS TO THE FOUNDATION	---	X
5.	FABRICATION AND INSTALLATION OF SYSTEMS OR COMPONENTS REQUIRED TO MEET THE IMPACT-RESISTANCE REQUIREMENTS OF SECTION 1609.1.2	---	X

TABLE 1705.5.3
REQUIRED SPECIAL INSPECTION OF MASS TIMBER CONSTRUCTION

	TYPE		FREQUENCY CONT.	FREQUENCY PERIODIC
1.	INSPECTION OF ANCHORAGE AND CONNECTIONS OF MASS TIMBER CONSTRUCTION TO TIMBER DEEP FOUNDATION SYSTEMS.		---	X
2.	INSPECT ERECTION OF MASS TIMBER CONSTRUCTION.		---	X
3.	INSPECTION OF CONNECTIONS WHERE INSTALLATION METHODS ARE REQUIRED TO MEET DESIGN LOADS.			
	THREADED FASTENERS	VERIFY USE OF PROPER INSTALLATION EQUIPEMENT.	---	X
		VERIFY USE OF PRE-DRILLED HOLES WHERE REQUIRED.	---	X
		INSPECT SCREWS, INCLUDING DIAMETER, LENGTH, HEAD TYPE, SPACING, INSTALLATION ANGLE AND DEPTH.	---	X
	ADHESIVE ANCHORS INSTALLED IN HORIZONTAL OR UPWARDLY INCLINED ORIENTATION TO RESIST SUSTAINED TENSION LOADS.		X	---
	ADHESIVE ANCHORS NOT DEFINED IN PRECEDING CELL.		---	X
	BOLTED CONNECTIONS.		---	X
	CONCEALED CONNECTIONS.		---	X

TABLE 1705.3
REQUIRED VERIFICATION AND INSPECTION OF CONCRETE CONSTRUCTION

	TYPE	FREQUENCY CONT.	FREQUENCY PERIODIC
1.	INSPECT OF REINFORCEMENT, INCLUDING PRESTRESSING TENDONS, AND PLACEMENT.	---	X
2.	REINFORCING BAR WELDING		
	A. VERIFY WELDABILITY OF REINFORCING BARS OTHER THAN ASTM A706;	---	X
	B. INSPECT SINGLE PASS FILLET WELDS, MAXIMUM $\frac{5}{16}$"; AND	---	X
	C. INSPECT ALL OTHER WELDS	X	---
3.	INSPECT ANCHORS CAST IN CONCRETE.	---	X
4.	INSPECT ANCHORS POST-INSTALLED IN HARDENED CONCRETE MEMBERS.		
	A. ADHESIVE ANCHORS INSTALLED IN HORIZONTALLY OR UPWARDLY INCLINED ORIENTATIONS TO RESIST SUSTAINED TENSION LOADS.	X	---
	B. MECHANICAL ANCHORS AND ADHESIVE ANCHORS NOT DEFINED IN 4.A.	---	X
5.	VERIFY USE OF REQUIRED DESIGN MIX.	---	X
6.	PRIOR TO CONCRETE PLACEMENT, FABRICATE SPECIMENS FOR STRENGTH TESTS, PERFORM SLUMP AND AIR CONTENT TESTS, AND DETERMINE THE TEMPERATURE OF THE CONCRETE.	X	---
7.	INSPECT OF CONCRETE AND SHOTCRETE PLACEMENT FOR PROPER APPLICATION TECHNIQUES.	X	---
8.	VERIFY MAINTENANCE OF SPECIFIED CURING TEMPERATURE AND TECHNIQUES.	---	X
9.	INSPECT OF PRESTRESSED CONCRETE:		
	A. APPLICATION OF PRESTRESSING FORCES; AND	X	
	B. GROUTING OF BONDED PRESTRESSING TENDONS.	X	---
10.	INSPECT ERECTION OF PRECAST CONCRETE MEMBERS.	---	X
11.	FOR PRECAST CONCRETE DIAPHRAGM CONNECTIONS OR REINFORCEMENT AT JOINTS CLASSIFIED AS MODERATE OR HIGH DEFORMABILITY ELEMENTS (MDE OR HDE) IN STRUCTURES ASSIGNED TO SEISMIC DESIGN CATAGORY C, D, E OR F, INSPECT SUCH CONNECTIONS AND REINFORCEMENT IN THE FIELD FOR:		
	A. INSTALLATION OF THE EMBEDDED PARTS	X	---
	B. COMPLETION OF THE CONTINUITY OF REINFORCEMENT ACROSS JOINTS.	X	---
	C. COMPLETION OF CONNECTIONS IN THE FIELD.	X	---
12.	INSPECT INSTALLATION TOLERANCES OF PRECAST CONCRETE DIAPHRAGM CONNECTIONS FOR COMPLIANCE WITH ACI 550.5.	---	X
13.	VERIFY IN-SITU CONCRETE STRENGTH, PRIOR TO STRESSING OF TENDONS IN POST-TENSIONED CONCRETE AND PRIOR TO REMOVAL OF SHORES AND FORMS FROM BEAMS AND STRUCTURAL SLABS.	---	X
14.	INSPECT FORMWORK FOR SHAPE, LOCATION AND DIMENSIONS OF THE CONCRETE MEMBER BEING FORMED.	---	X
	SPECIAL PROVISIONS FOR SEISMIC RESISTANCE		
1.	VERIFY SUBMITTAL OF CERTIFIED MILL TEST REPORTS FOR EACH SHIPMENT OF REINFORCING STEEL USED TO RESIST FLEXURAL, SHEAR AND AXIAL FORCES IN REINFORCED CONCRETE INTERMEDIATE FRAMES, SPECIAL MOMENT FRAMES AND BOUNDARY ELEMENTS OF SPECIAL REINFORCED CONCRETE OR REINFORCED MASONRY SHEAR WALLS.	---	X
2.	TEST ASTM A 615 REINFORCING STEEL IS USED TO RESIST EARTHQUAKE-INDUCED FLEXURAL AND AXIAL FORCES IN SPECIAL MOMENT FRAMES AND IN WALL BOUNDARY ELEMENTS OF SHEAR WALLS IN STRUCTURES ASSIGNED TO SEISMIC DESIGN CATEGORY D, E OR F, PER ACI 318.	---	X
3.	TEST ASTM A 615 REINFORCING STEEL THAT IS TO BE WELDED. CHEMICAL TESTS SHALL BE PERFORMED TO DETERMINE WELDABILITY IN ACCORDANCE WITH SECTION 3.5.2 OF ACI 318	---	X
4.	INSTALLATION OF (CHEMICAL / EPOXY) ADHESIVE ANCHORS, RODS AND DOWELS	X	---
5.	INSTALLATION AND TORQUE TESTING EXPANSION ANCHORS	X	---

ACI 530, TABLE 3.1.2
LEVEL B REQUIRED VERIFICATION & INSPECTION OF MASONRY CONSTRUCTION

	TYPE	FREQUENCY[a] CONT.	FREQUENCY[a] PERIODIC
	MINIMUM TEST		
	VERIFICATION OF SLUMP FLOW AND VISUAL STABILITY INDEX (VSI) AS DELIVERED TO THE PROJECT SITE IN ORDINANCE WITH SPECIFICATION ARTICLE 1.5 B.1.b3 FOR SELF-CONSOLIDATING GROUT		
	VERIFICATION OF f'_m AND f'_{AAC} IN ORDINANCE WITH SPECIFICATION ARTICLE 1.4 B PRIOR TO CONSTRUCTION, EXCEPT WHERE SPECIFICALLY EXEMPTED BY THIS CODE		
	MINIMUM SPECIAL INSPECTION		
1.	VERIFY COMPLIANCE WITH THE APPROVED SUBMITTALS	---	X
2.	AS MASONRY CONSTRUCTION BEGINS, VERIFY THAT THE FOLLOWING ARE IN COMPLIANCE		
	A. PROPORTIONS OF SITE-PREPARED MORTAR	---	X
	B. CONSTRUCTION OF MORTAR JOINTS	---	X
	C. GRADE AND SIZE PRESTRESSING TENDONS AND ANCHORAGES	---	X
	D. LOCATION OF REINFORCEMENT, CONNECTORS, AND PRESRESSING TENDONS AND ANCHORAGES	---	X
	E. PRESTRESSING TECHNIQUE	---	X
	F. PROPERTIES OF THIN-BED MORTAR FOR AAC MASONRY	X[b]	X[c]
3.	PRIOR TO GROUTING, VERIFY THAT THE FOLLOWING ARE IN COMPLIANCE		
	A. GROUT SPACE	---	X
	B. GRADE, TYPE, AND SIZE OF REINFORCEMENT AND ANCHOR BOLTS, AND PRESTRESSING TENDONS AND ANCHORAGES	---	X
	C. PLACEMENT OF REINFORCEMENT, CONNECTORS, AND PRESTRESSINGTENDONS AND ANCHORS	---	X
	D. PROPORTIONS OF SITE-PREPARED GROUT AND PRESTRESSING GROUT FOR BONDED TENDONS	---	X
	E. CONSTRUCTION OF MORTAR JOINTS	---	X
4.	VERIFY DURING CONSTRUCTION		
	A. SIZE AND LOCATION OF STRUCTURAL ELEMENTS	---	X
	B. TYPE, SIZE, AND LOCATION OF ANCHORS, INCLUDING OTHER DETAILS OF ANCHORAGE OF MASONRY TO STRUCTURAL MEMBERS, FRAMES, OR OTHER CONSTRUCTION	---	X
	C. WELDING OF REINFORCEMENT	X	---
	D. PREPARATION, CONSTRUCTION, AND PROTECTION OF MASONRY DURING COLD WEATHER (TEMPERATURE BELOW 40°F(4.4°C)) OR HOT WEATHER (TEMPERATURE ABOVE 90°F(32.2°C))	---	X
	E. APPLICATION AND MEASUREMENT OF PRESTRESSING FORCE	X	---
	F. PLACEMENT OF GROUT AND PRESTRESSING GROUT FOR BONDED TENDONS IS IN COMPLIANCE	X	---
	G. PLACEMENT OF AAC MASONRY UNITS AND CONSTRUCTION OF THIN-BED MORTAR JOINTS	X[b]	X[c]
5.	OBSERVE PREPARATION OF GROUT SPECIMENS, MORTAR SPECIMENS, AND/OR PRISMS	---	X

[a] FREQUENCY REFERS TO THE FREQUENCY OF SPECIAL INSPECTION, WHICH MAY BE CONTINUOUS DURING THE TASK LISTED OR PERIODIC DURING THE LISTED TASK, AS DEFINED IN THE TABLE.
[b] REQUIRED FOR THE FIRST 5000 SQUARE FEET (465 SQUARE METERS) OF AAC MASONRY
[c] REQUIRED AFTER THE FIRST 5000 SQUARE FEET (465 SQUARE METERS) OF AAC MASONRY

AISC 360, TABLES N5 & N6
REQUIRED VERIFICATION AND INSPECTION OF STEEL CONSTRUCTION

	TYPE	FREQUENCY CONT.	FREQUENCY PERIODIC
1.	**TABLE N5.4-1 INSPECTION TASKS PRIOR TO WELDING**		
	A. WELDER QUALIFICATION RECORDS AND CONTINUITY RECORDS	X	---
	B. WPS AVAILABLE	X	---
	C. MANUFACTURER CERTIFICATIONS FOR WELDING CONSUMABLES AVAILABLE	X	---
	D. MATERIAL IDENTIFICATION (TYPE/GRADE)	---	X
	E. WELDER IDENTIFICATION SYSTEM[d]	---	X
	F. FIT-UP OF GROOVE WELDS (INCLUDING JOINT GEOMETRY) 1. JOINT PREPARATIONS 2. DIMENSIONS (ALIGNMENT, ROOT OPENING, ROOT FACE, BEVEL) 3. CLEANLINESS (CONDITION OF STEEL SURFACES) 4. TACKING (TACK AND WELD QUALITY AND LOCATION) 5. BACKING TYPE AND FIT (IF APPLICABLE)	---	X
	G. FIT-UP OF CJP GROOVE WELDS OF HSS T-, Y- AND K-JOINTS WITHOUT BACKING (INCLUDING JOINT GEOMETRY) 1. JOINT PREPARATIONS 2. DIMENSIONS (ALIGNMENT, ROOT OPENING, ROOT FACE, BEVEL) 3. CLEANLINESS (CONDITION OF STEEL SURFACES) 4. TACKING (TACK AND WELD QUALITY AND LOCATION)	X	---
	H. CONFIGURATION AND FINISH OF ACCESS HOLES	---	X
	I. FIT-UP OF FILLET WELDS 1. DIMENSIONS (ALIGNMENT, GAPS AT ROOT) 2. CLEANLINESS (CONDITION OF STEEL SURFACES) 3. TACKING (TACK AND WELD QUALITY AND LOCATION)	---	X
	J. CHECK WELDING EQUIPMENT	---	X
	[d] THE FABRICATOR OR ERECTOR, AS APPLICABLE, SHALL MAINTAIN A SYSTEM BY WHICH A WELDER WHO HAS WELDED A JOINT OR MEMBER CAN BE IDENTIFIED. STAMPS, IF USED, SHALL BE THE LOW-STRESSED TYPE.		
2.	**TABLE N5.4-2 INSPECTION TASKS DURING TO WELDING**		
	A. CONTROL AND HANDING OF WELDING CONSUMABLES 1. PACKAGING 2. EXPOSURE CONTROL	---	X
	B. NO WELDING OVER CRACKED TACK WELDS	---	X
	C. ENVIRONMENTAL CONDITIONS 1. WIND SPEED WITHIN LIMITS 2. PRECIPITATION AND TEMPERATURE	---	X
	D. WPS FOLLOWED 1. SETTINGS ON WELDING EQUIPMENT 2. TRAVEL SPEED 3. SELECTED WELDING MATERIALS 4. SHIELDING GAS TYPE/FLOW RATE 5. PREHEAT APPLIED 6. INTERPASS TEMPERATURE MAINTAINED (MIN./MAX.) 7. PROPER POSITION (F,V,H,OH)	---	X
	E. WELDING TECHNIQUES 1. INTERPASS AND FINAL CLEANING 2. EACH PASS WITHIN PROFILE LIMITATIONS 3. EACH PASS MEETS QUALITY REQUIREMENTS	---	X
	F. PLACEMENT AND INSTALLATION OF STEEL HEADED STUD ANCHORS	X	---
3.	**TABLE N5.4-3 INSPECTION TASKS AFTER WELDING**		
	A. WELDS CLEANED	---	X
	B. SIZE, LENGTH AND LOCATION OF WELDS	X	---
	C. WELDS MEET VISUAL ACCEPTANCE CRITERIA 1. CRACK PROHIBITION 2. WELD/BASE-METAL FUSION 3. CRATER CROSS SECTION 4. WELD PROFILES 5. WELD SIZE 6. UNDERCUT 7. POROSITY	X	---
	D. ARC STRIKES	X	---
	E. k-AREA[a]	X	---
	F. WELD ACCESS HOLES IN ROLLED HEAVY SHAPES AND BUILT-UP HEAVY SHAPES[b]	X	---
	G. BACKING REMOVED AND WELDS TABS REMOVED (IF REQUIRED)	X	---
	H. REPAIR ACTIVITIES	X	---
	I. DOCUMENT ACCEPTANCE OR REJECTION OF WELDED JOINT OR MEMBER	X	---
	J. NO PROHIBITED WELDS HAVE BEEN ADDED WITHOUT THE APPROVAL OF THE EOR	---	X
	[a] WHEN WELDING OF DOUBLE PLATES, CONTINUITY PLATES OR STIFFENERS HAS BEEN PERFORMED IN THE k-AREA, VISUALLY INSPECT THE WEB k-AREA FOR CRACKS WITHIN 3 IN. (75 MM) OF THE WELD. [b] AFTER ROLLED HEAVY SHAPES (SEE SECTION A3.1c) AND BUILT-UP HEAVY SHAPES (SEE SECTION A3.1d) ARE WELDED, VISUALLY INSPECT THE WELD ACCESS HOLE FOR CRACKS.		
4.	**TABLE N5.6-1 INSPECTION TASKS PRIOR TO BOLTING**		
	A. MANUFACTURE'S CERTIFICATIONS AVAILABLE FOR FASTENER MATERIALS	---	X
	B. FASTENERS MARKED IN ACCORDANCE WITH ASTM REQUIREMENTS	---	X
	C. CORRECT FASTENERS SELECTED FOR THE JOINT DETAIL (GRADE, TYPE, BOLT LENGTH IF THREADS ARE TO BE EXCLUDED FROM THE SHEAR PLANE.)	---	X
	D. CORRECT BOLTING PROCEDURE SELECTED FOR JOINT DETAIL	---	X
	E. CONNECTING ELEMENTS, INCLUDING THE APPROPRIATE FAYING SURFACE CONDITION AND HOLE PREPARATION, IF SPECIFIED, MEET APPLICABLE REQUIREMENTS	---	X
	F. PRE-INSTALLATION VERIFICATION TESTING BY INSTALLATION PERSONNEL OBSERVED AND DOCUMENTED FOR FASTENER ASSEMBLIES AND METHODS USED	X	---
	G. PROTECTED STORAGE PROVIDED FOR BOLTS, WASHERS AND OTHER FASTENER COMPONENTS	---	X
5.	**TABLE N5.6-2 INSPECTION TASKS DURING TO BOLTING**		
	A. FASTENER ASSEMBLIES PLACED IN ALL HOLES AND WASHERS AND NUTS ARE POSITIONED AS REQUIRED	---	X
	B. JOINT BROUGHT TO THE SNUG-TIGHT CONDITION PRIOR TO THE PRETENSIONING OPERATION	---	X
	C. FASTENER COMPONENT NOT TURNED BY THE WRENCH PREVENTED BY ROTATING	---	X
	D. FASTENERS ARE PRETENSIONED IN ORDINANCE WITH THE RCSC SPECIFICATION, PROGRESSING SYSTEMATICALLY FROM THE MOST RIGID POINT TOWARD THE FREE EDGES	---	X
6.	**TABLE N5.6-3 INSPECTION TASKS AFTER BOLTING**		
	A. DOCUMENT ACCEPTANCE OR REJECTION OF BOLTED CONNECTIONS	X	---
7.	MATERIAL VERIFICATION OF STRUCTURAL STEEL AND COLD-FORMED STEEL DECK:		
	A. FOR STRUCTURAL STEEL, IDENTIFICATION MARKINGS TO CONFORM TO AISC 360.	---	X
	B. FOR OTHER STEEL, IDENTIFICATION MARKINGS TO CONFORM TO ASTM STANDARDS SPECIFIED IN THE APPROVED CONSTRUCTION DOCUMENTS.	---	X
	C. MANUFACTURER'S CERTIFIED TEST REPORTS.	---	X
8.	INSPECTION OF STEEL FRAME JOINT DETAILS FOR COMPLIANCE:		
	A. DETAILS SUCH AS BRACING AND STIFFENING.	---	X
	B. MEMBER LOCATIONS.	---	X
	C. APPLICATION OF JOINT DETAILS AT EACH CONNECTION.	---	X
	SPECIAL PROVISIONS FOR SEISMIC RESISTANCE		
1.	THE TESTING SHALL BE AS REQUIRED BY AISC 341.	---	---
2.	BASE METAL THICKER THAN 1.5 INCHES (38 MM), WHERE SUBJECT TO THRO

STATEMENT OF SPECIAL INSPECTIONS

OWNER: _____

RDP: _____

THIS STATEMENT OF SPECIAL INSPECTIONS IS SUBMITTED AS A CONDITION FOR PERMIT ISSUANCE IN ACCORDANCE WITH THE SPECIAL INSPECTION AND STRUCTURAL TESTING REQUIREMENTS OF THE BUILDING CODE. INCLUDED IN THIS DOCUMENT ARE:

- SCHEDULE OF SPECIAL INSPECTIONS APPLICABLE TO THIS PROJECT;
- SCHEDULE OF THE TESTING AGENCIES AND OTHER SPECIAL INSPECTORS WHO WILL CONDUCT THE TESTS AND INSPECTIONS.
- SPECIAL PROVISIONS FOR SEISMIC AND WIND RESISTANCE.
- STRUCTURAL OBSERVATION SCHEDULE

THE SCHEDULE OF SPECIAL INSPECTIONS SUMMARIZES THE TESTING AND SPECIAL INSPECTIONS REQUIRED BY THE BUILDING CODE. SPECIAL INSPECTORS SHALL REFER TO THE APPROVED PLANS AND SPECIFICATIONS FOR DETAILED SPECIAL INSPECTION REQUIREMENTS. THE PROJECT INSPECTORS SHALL ALSO PERFORM ANY ADDITIONAL TESTS AND INSPECTIONS REQUIRED BY THE APPROVED PLANS AND SPECIFICATIONS AND BUILDING CODE.

THE SPECIAL INSPECTORS AND TESTING AGENCIES SHALL KEEP RECORDS OF ALL INSPECTIONS AND TESTS, AND FURNISH REPORTS TO THE BUILDING OFFICIAL AND THE REGISTERED DESIGN PROFESSIONAL IN RESPONSIBLE CHARGE (RDP). DISCOVERED DISCREPANCIES SHALL BE BROUGHT TO THE IMMEDIATE ATTENTION OF THE CONTRACTOR FOR CORRECTION. IF SUCH DISCREPANCIES ARE NOT CORRECTED, THE DISCREPANCIES SHALL BE BROUGHT TO THE ATTENTION OF THE BUILDING OFFICIAL AND THE RDP. INTERIM REPORTS SHALL BE SUBMITTED TO THE BUILDING OFFICIAL AND THE REGISTERED DESIGN PROFESSIONAL IN RESPONSIBLE CHARGE:

INTERIM REPORT FREQUENCY: OR [ ] PER ATTACHED SCHEDULE.

A FINAL REPORT OF SPECIAL INSPECTIONS DOCUMENTING COMPLETION OF ALL REQUIRED SPECIAL INSPECTIONS, TESTING AND CORRECTION OF ANY DISCREPANCIES NOTED IN THE INSPECTIONS SHALL BE SUBMITTED PRIOR TO ISSUANCE OF A CERTIFICATE OF USE AND OCCUPANCY.

THE CONTRACTOR IS REQUIRED TO SIGN AND SUBMIT A WRITTEN STATEMENT OF RESPONSIBILITY THAT COMPLIES WITH CBC SECTION 1706, TO THE BUILDING OFFICIAL, THE RDP, AND TO THE OWNER PRIOR TO COMMENCEMENT OF WORK SUBJECT TO SPECIAL INSPECTION. JOB SITE SAFETY AND MEANS AND METHODS OF CONSTRUCTION ARE SOLELY THE RESPONSIBILITY OF THE CONTRACTOR. THE SPECIAL INSPECTION PROGRAM DOES NOT RELIEVE THE CONTRACTOR OF HIS OR HER RESPONSIBILITIES.

THE OWNER RECOGNIZES HIS OBLIGATION TO ENSURE THAT THE CONSTRUCTION COMPLIES WITH THE APPROVED PERMIT DOCUMENTS AND TO IMPLEMENT THIS PROGRAM OF SPECIAL INSPECTIONS. IN PARTIAL FULFILLMENT OF THESE OBLIGATIONS THE OWNER WILL RETAIN AND DIRECTLY PAY FOR THE SPECIAL INSPECTIONS AS REQUIRED IN CBC SECTION 1704.1. ADDITIONALLY, THE OWNER SHALL DESIGNATE A RESPONSIBLE INDIVIDUAL OR FIRM, ACCEPTABLE TO THE RDP, TO OVERSEE AND COORDINATE THE IMPLEMENTATION OF THE SPECIAL INSPECTION PROGRAM. THIS INDIVIDUAL SHALL MONITOR SPECIAL INSPECTION ACTIVITIES ON THE JOB SITE TO ASSURE THAT THE SPECIAL INSPECTORS ARE QUALIFIED AND ARE PERFORMING THEIR DUTIES AS CALLED FOR IN THIS STATEMENT OF SPECIAL INSPECTION.

THIS PLAN HAS BEEN DEVELOPED WITH THE UNDERSTANDING THAT THE BUILDING OFFICIAL WILL PERFORM INSPECTIONS AS REQUIRED BY THE LOCAL BUILDING CODE AND, IN COOPERATION WITH THE RDP, WILL:

- REVIEW AND APPROVE THE QUALIFICATIONS OF THE SPECIAL INSPECTORS WHO WILL PERFORM THE INSPECTIONS.
- REVIEW SUBMITTED INSPECTION REPORTS.

OWNER'S AUTHORIZATION: BUILDING OFFICIAL'S ACCEPTANCE

SIGNATURE DATE SIGNATURE DATE

SCHEDULE OF INSPECTION AND TESTING AGENCIES

THIS STATEMENT OF SPECIAL INSPECTIONS INCLUDES THE FOLLOWING BUILDING SYSTEMS:

[√] SOILS AND FOUNDATIONS
[ ] CAST-IN-PLACE CONCRETE
[ ] PRECAST CONCRETE
[√] MASONRY
[√] STRUCTURAL STEEL
[ ] COLD-FORMED STEEL FRAMING
[ ] POST INSTALLED ANCHORS
[ ] SPRAY FIRE RESISTANT MATERIAL
[√] WOOD CONSTRUCTION
[ ] EXTERIOR INSULATION & FINISH SYSTEM
[ ] MECHANICAL & ELECTRICAL SYSTEMS
[ ] ARCHITECTURAL SYSTEMS
[ ] SPECIAL CASES

APPROVED AGENCIES	NAME OF INDIVIDUAL AND FIRM	ADDRESS, TELEPHONE, E-MAIL
1. SPECIAL INSPECTION COORDINATOR		
2. INSPECTOR		
3. INSPECTOR		
4. TESTING AGENCY		
5. TESTING AGENCY		
6. OTHER		

NOTE: THE INSPECTORS AND TESTING AGENCIES SHALL BE ENGAGED BY THE OWNER OR THE OWNER'S AGENT, AND NOT BY THE CONTRACTOR OR SUBCONTRACTOR WHOSE WORK IS TO BE INSPECTED OR TESTED. ANY CONFLICT OF INTEREST MUST BE DISCLOSED TO THE BUILDING OFFICIAL, PRIOR TO COMMENCING WORK.

SPECIAL PROVISIONS FOR SEISMIC & WIND RESISTANCE

QUALITY ASSURANCE FOR SEISMIC RESISTANCE

SEISMIC DESIGN CATEGORY D

SEISMIC REQUIREMENTS ARE [√] REQUIRED [ ] NOT REQUIRED

DESCRIPTION OF SEISMIC FORCE RESISTING SYSTEM AND DESIGNATED SEISMIC SYSTEMS:
SPECIAL REINFORCED MASONRY SHEAR WALLS
LIGHT-FRAMED WOOD WALL SHEATHED WITH WOOD STRUCTURAL PANELS RATED FOR SHEAR RESISTANCE
STEEL ORDINARY CANTILEVER COLUMN SYSTEMS
SPECIAL REINFORCED CONCRETE MOMENT FRAMES

SEE THE SCHEDULE OF INSPECTIONS FOR SPECIAL INSPECTION & TESTING REQUIREMENTS FOR SEISMIC RESISTANCE

QUALITY ASSURANCE FOR WIND REQUIREMENTS

BASIC WIND SPEED (3 SECOND GUST) 96 MPH
WIND EXPOSURE CATEGORY C

WIND REQUIREMENTS ARE [ ] REQUIRED [√] NOT REQUIRED

DESCRIPTION OF WIND FORCE RESISTING SYSTEM AND DESIGNATED WIND RESISTING COMPONENTS:

SEE THE SCHEDULE OF INSPECTIONS FOR SPECIAL INSPECTION & TESTING REQUIREMENTS FOR WIND RESISTANCE

AGENCY

REVIEWED FOR CODE COMPLIANCE BY:
WILLDAN ENGINEERING

Approval of these plans & specifications shall not be construed to be a permit for, or an approval of any violation of any Federal, State, County or City laws or ordinances. One set of approved plans must be kept on the job until completion.

10:04:35 AM Jul 21, 2025

PTN_____ APPL_____

FLEWELLING & MOODY
architecture planning interiors

HEADQUARTERS OFFICE:
99 South Lake Avenue, Suite 300
Pasadena, CA 91101
Phone: 323.543.8300
E-Mail: fm-pasadena@flewelling-moody.com

ANTELOPE VALLEY OFFICE:
1035 West Lancaster Boulevard
Lancaster, California 93534
Phone: 661.949.0771
E-Mail: fm-lancaster@flewelling-moody.com

An Employee Owned Corporation

ARCHITECT

CONSULTANT

REGISTERED PROFESSIONAL ENGINEER
RAYMOND SCOTT LUNDEEN
No. S4900
STRUCTURAL
STATE OF CALIFORNIA

R G S E inc.
Structural Engineers
2720 Cochran St. Suite 8B
Simi Valley, CA 93065
P: 805.522.3379
www.rgseinc.com
info@rgseinc.com

Drawn by aaronc@rgseinc.com
Checked by sokheanc@rgseinc.com

Revisions

No.	Date	Description

All dimensions must be checked at the job by the contractor who accepts full responsibility for their accuracy under the contract. These plans & the specifications in connection therewith have been prepared for a specific site. Any and all responsibility for their use in whole or in part on any other site is hereby disclaimed by Flewelling & Moody.

CITY OF RIDGECREST

SGT. JOHN PINNEY MEMORIAL POOL
REPLACEMENT PROJECT

205 S WARNER ST, RIDGECREST,CA 93555

TESTING & INSPECTION PROGRAMS

Job No. 3055-0100

Date 04-18-2025

S0.06

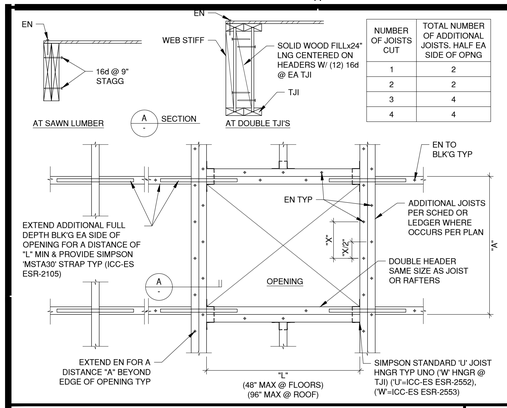

NUMBER OF JOISTS CUT	TOTAL NUMBER OF ADDITIONAL JOISTS, HALF EA SIDE OF OPNG
1	2
2	2
3	4
4	4

TYP CEILING OR ROOF OPNG PLAN

SCALE:1"=1'-0" | 13

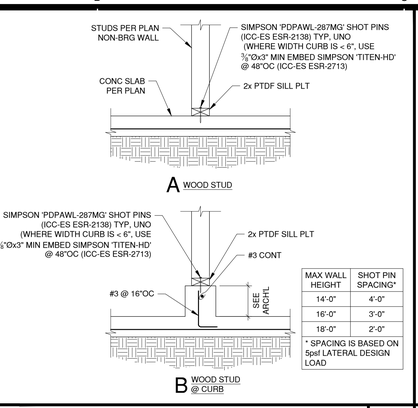

MAX WALL HEIGHT	SHOT PIN SPACING*
14'-0"	4'-0"
16'-0"	3'-0"
18'-0"	2'-0"

* SPACING IS BASED ON 5psf LATERAL DESIGN LOAD

PARTITION WALL

SCALE:1"=1'-0" | 9

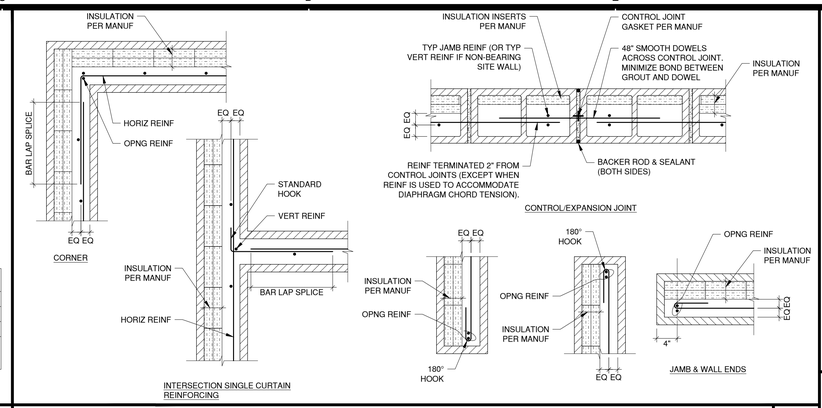

TYPICAL PRE-INSULATED CMU WALL DETAIL

SCALE:1"=1'-0" | 5

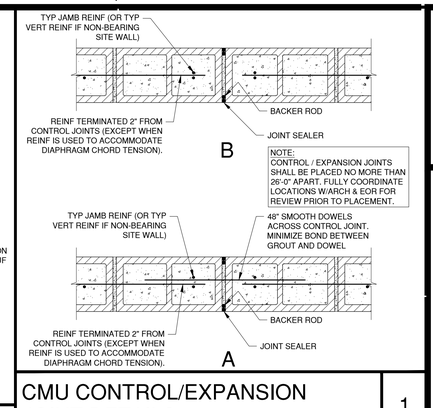

CMU CONTROL/EXPANSION JOINT DETAILS

SCALE:1"=1'-0" | 1

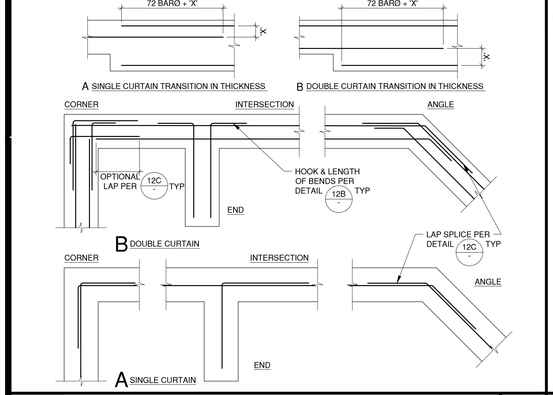

PARTITION BRACING

SCALE:1"=1'-0" | 15

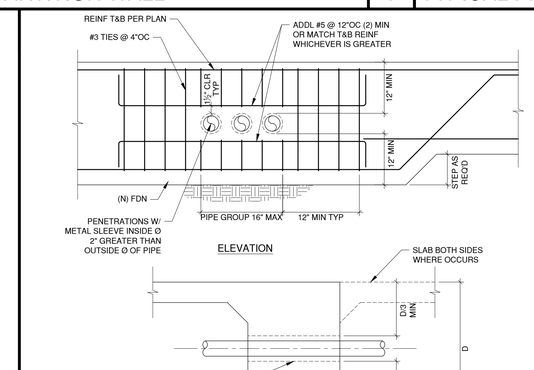

TYP PIPE THRU FTG DETAIL

SCALE:1"=1'-0" | 11

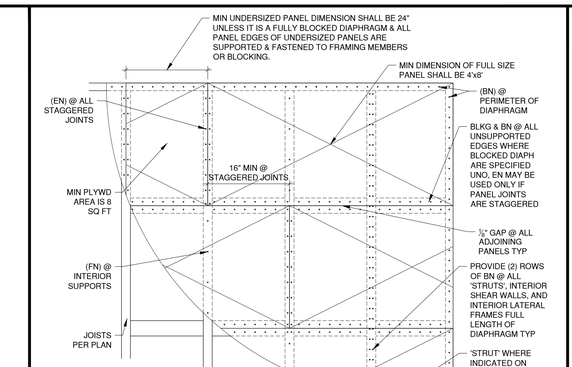

FLOOR & ROOF SHTG DETAIL

SCALE:1"=1'-0" | 6

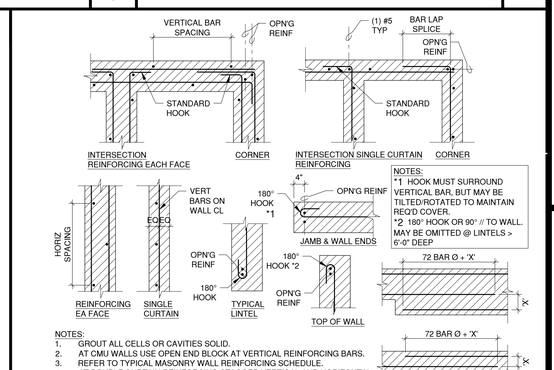

TYPICAL MASONRY WALL DETAIL

SCALE:1"=1'-0" | 2

REINF @ FOOTING INTERSECTIONS

SCALE:1"=1'-0" | 16

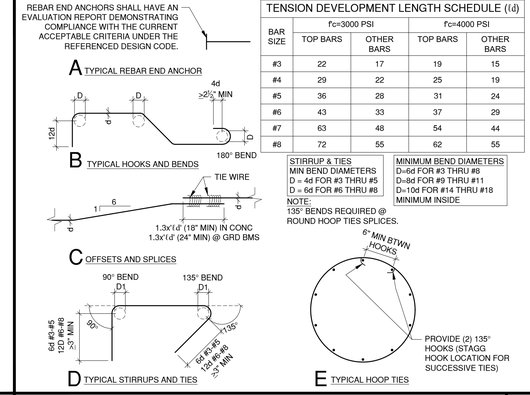

TENSION DEVELOPMENT LENGTH SCHEDULE (ld)				
BAR SIZE	f'c=3000 PSI		f'c=4000 PSI	
	TOP BARS	OTHER BARS	TOP BARS	OTHER BARS
#3	22	17	19	15
#4	29	22	25	19
#5	36	28	31	24
#6	43	33	37	29
#7	63	48	54	44
#8	72	55	62	55

STIRRUP & TIES
MIN BEND DIAMETERS
D = 4d FOR #3 THRU #5
D = 6d FOR #6 THRU #8

MINIMUM BEND DIAMETERS
D=6d FOR #3 THRU #8
D=8d FOR #9 THRU #11
D=10d FOR #14 THRU #18
MINIMUM INSIDE

NOTE:
135° BENDS REQUIRED @ ROUND HOOP TIES SPLICES.

REINFORCING DETAIL

SCALE:1"=1'-0" | 12

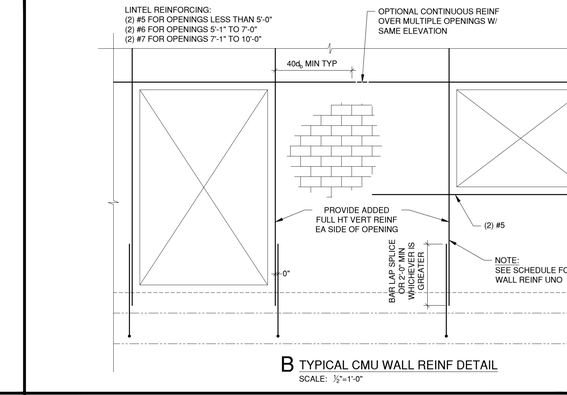

NOTES:
1. WHERE TYP REINF IS INTERRUPTED PROVIDE ADDED REINF ON A ONE-TO-ONE BASIS.
2. PROVIDE PENETRATION LAYOUT INCLUDING ALL TRADES FOR REVIEW AND APPROVAL BY ARCH & SEOR SCAN CMU PRIOR TO CORING TO PREVENT CUTTING REINF
3. PROVIDE ADDED FULL HT VERT REINF EA SIDE OF PENETRATION GROUP (EF WHERE OCCURS) AT CANTILEVER RETAINING WALL PROVIDE ADDED FDN DOWELS TO MATCH. FULL HT BARS MAY BE OMITTED WHERE PENETRATIONS ARE LOCATED @ 32"OC EW MIN SUBJ TO NOTES 1 & 2.
4. #5 BTWN PENETRATIONS (EF WHERE OCCURS).
5. MINIMUM LAP OF REINFORCING STEEL PER DETAIL 4 S0.30

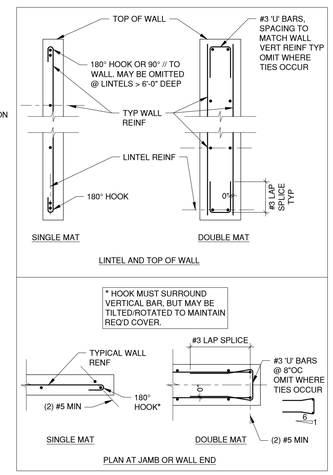

TYPICAL CMU WALL REINF DETAIL

SCALE:1"=1'-0" | 4

AGENCY

REVIEWED FOR CODE COMPLIANCE BY: WILLDAN ENGINEERING

Approval of these plans & specifications shall not be construed to be a permit for, or an approval of any violation of any Federal, State, County or City laws or ordinances. One set of approved plans must be kept on the job until completion.

10:04:37 AM Jul 21, 2025

PTN_____ APPL_____

FLEWELLING & MOODY
architecture planning interiors

HEADQUARTERS OFFICE:
99 South Lake Avenue, Suite 300
Pasadena, CA 91101
Phone: 323.543.8300
E-Mail: fm-pasadena@flewelling-moody.com

ANTELOPE VALLEY OFFICE:
1035 West Lancaster Boulevard
Lancaster, California 93534
Phone: 661.949.0771
E-Mail: fm-lancaster@flewelling-moody.com

An Employee Owned Corporation

ARCHITECT

REGISTERED PROFESSIONAL ENGINEER JEFFREY SCOTT LUNDBERG No.6432 STRUCTURAL STATE OF CALIFORNIA

CONSULTANT

RGSE inc.
Structural Engineers
2720 Cochran St. Suite 8B
Simi Valley, CA 93065
P: 805.522.3379
www.rgseinc.com
info@rgseinc.com

Drawn by aaronc@rgseinc.com
Checked by sokheanc@rgseinc.com

Revisions

No.	Date	Description

All dimensions must be checked at the job by the contractor who accepts full responsibility for their accuracy under the contract. These plans & the specifications in connection therewith have been prepared for a specific site. Any and all responsibility for their use in whole or in part on any other site is hereby disclaimed by Flewelling & Moody.

CITY OF DIGECREST

SGT. JOHN PINNEY MEMORIAL POOL REPLACEMENT PROJECT

205 S WARNER ST, RIDGECREST,CA 93555

TYPICAL DETAILS

Job No. 3055-0100

Date 04-18-2025

S0.10

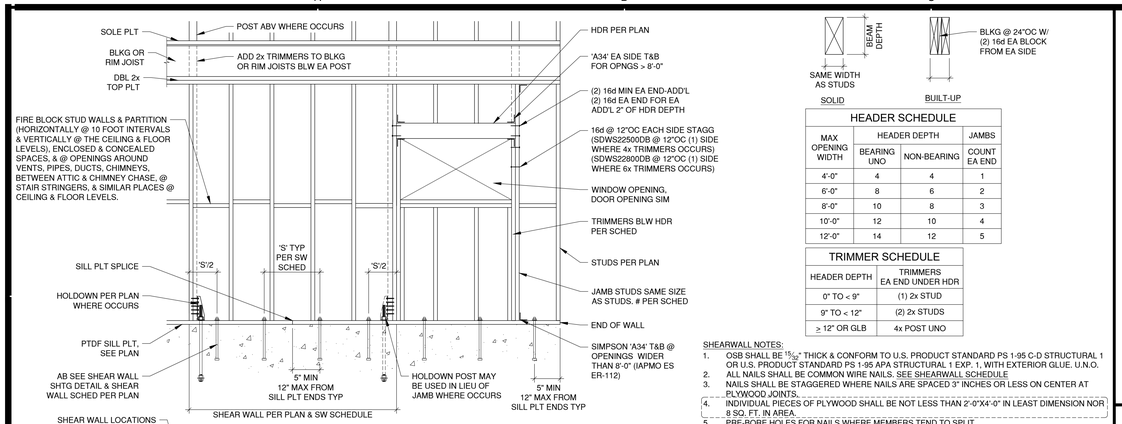

A TYPICAL WOOD STUD WALL

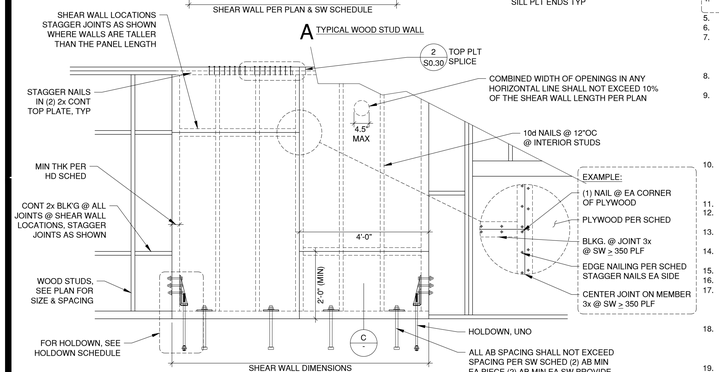

B TYPICAL SHEAR WALL DETAIL

HEADER SCHEDULE			
MAX OPENING WIDTH	HEADER DEPTH		JAMBS
	BEARING UNO	NON-BEARING	COUNT EA END
4'-0"	4	4	1
6'-0"	8	6	2
8'-0"	10	8	3
10'-0"	12	10	4
12'-0"	14	12	5

TRIMMER SCHEDULE	
HEADER DEPTH	TRIMMERS EA END UNDER HDR
0" TO < 9"	(1) 2x STUD
9" TO < 12"	(2) 2x STUDS
≥ 12" OR GLB	4x POST UNO

SHEARWALL NOTES:
1. OSB SHALL BE 15/32" THICK & CONFORM TO U.S. PRODUCT STANDARD PS 1-95 C-D STRUCTURAL 1 OR U.S. PRODUCT STANDARD PS 1-95 APA STRUCTURAL 1 EXP. 1, WITH EXTERIOR GLUE. U.N.O.
2. ALL NAILS SHALL BE COMMON WIRE NAILS. SEE SHEARWALL SCHEDULE
3. NAILS SHALL BE STAGGERED WHERE NAILS ARE SPACED 3" INCHES OR LESS ON CENTER AT PLYWOOD JOINTS.
4. IN INDIVIDUAL PIECES OF PLYWOOD SHALL BE NOT LESS THAN 2'-0"X4'-0" IN LEAST DIMENSION NOR 8 SQ. FT. IN AREA.
5. PRE-BORE HOLES FOR NAILS WHERE MEMBERS TEND TO SPLIT.
6. RE-TIGHTEN SILL BOLTS NUTS BEFORE CLOSING IN.
7. PROVIDE FURRING OR BACKING OF THICKNESS AS REQUIRED TO MAINTAIN A COMMON WALL PLANE ALL WOOD STUD WALL SURFACE WHICH ARE ONLY PARTIALLY SHEATHED WITH STRUCTURAL PLYWOOD. COORDINATE AND ADJUST HEAD, JAMB AND SILL AS REQUIRED FOR PROPER OVERALL WALL THICKNESS.
8. PLYWOOD SHEETS MAY BE APPLIED VERTICALLY OR HORIZONTALLY AT CONTRACTORS OPTION. PLYWOOD JOINTS SHALL BE STAGGERED.
9. MACHINE APPLIED NAILING:
USE OF MACHINE NAILING IS SUBJECT TO A SATISFACTORY JOBSITE DEMONSTRATION FOR EACH PROJECT AND THE APPROVAL BY THE ARCHITECT OR STRUCTURAL ENGINEER. THE APPROVAL IS SUBJECT TO CONTINUED SATISFACTORY PERFORMANCE. MACHINE NAILING WILL NOT BE APPROVED IN 5/16" PLYWOOD, IF FLATHEADS PENETRATE THE OUTER PLY MORE THAN WOULD BE NORMAL FOR A HAMMER OR IF MINIMUM ALLOWABLE EDGE DISTANCES ARE NOT MAINTAINED, THE PERFORMANCE WILL BE DEEMED UNSATISFACTORY.
10. NAILS SHALL BE PLACED NOT LESS THAN ½" IN FROM THE PANEL EDGES AND NOT LESS THAN ⅜" FROM THE EDGE OF THE CONNECTING MEMBERS FOR SHEAR GREATER THAN 350 PLF. NAILS SHALL BE PLACED NOT LESS THAN ⅜" FROM PANEL EDGES AND NOT LESS THAN ¼" FROM THE EDGE OF THE CONNECTING MEMBERS FOR SHEARS OF 350 PLF OR LESS.
11. PROVIDE ⅛" GAP BETWEEN OSB SHEETS.
12. SHEATH ENTIRE WALL INCLUDING ABOVE AND BELOW OPENING TO AVOID LETTING IN OF OSB SHEATHING WITH SAME NAILING AS SHOWN IN SCHEDULE.
13. SHEAR WALLS MORE THAN ONE VERTICAL PANEL IN HEIGHT SHALL HAVE EITHER VERTICAL OR HORIZONTAL STAGGERED SPLICED JOINTS.
14. WHERE PANEL SHEAR CAPACITY > 350#, NAILS AT PANEL JOINTS AND SILL PLATES SHALL BE STAGGERED.
15. ALL WOOD POSTS AND NAILER TO STEEL COLUMNS SHALL RECEIVE EDGE NAILING.
16. MINIMUM LAG SCREW PENETRATION SHALL BE 8D.
17. MAXIMUM ACCUMULATED LENGTH OF PENETRATIONS NOT SHOWN ON PLANS SHALL NOT EXCEED 10% OF THE WALL LENGTH. MAXIMUM LENGTH OF EACH PENETRATION SHALL NOT EXCEED 4½" IN ANY DIRECTION (DO NOT OVER CUT). NO PENETRATIONS PERMITTED WITHIN 16" OF HOLDOWNS.
18. THE HOLE IN THE PLATE WASHER SHALL BE PERMITTED TO BE DIAGONALLY SLOTTED WITH A WIDTH OF UP TO 3/16" LARGER THAN THE BOLT DIAMETER AND SLOT LENGTH NOT TO EXCEED 1¾", PROVIDED A STANDARD CUT WASHER IS PLACED BETWEEN THE PLATE WASHER AND THE NUT.
19. WHERE PANELS ARE APPLIED ON BOTH FACES OF A WALL AND NAIL SPACING IS LESS THAN 6 INCHES ON CENTER ON EITHER SIDE, PANEL JOINTS SHALL BE OFFSET TO FALL ON DIFFERENT FRAMING MEMBERS OR FRAMING SHALL BE 3-INCH NOMINAL OR THICKER AND NAILS ON EACH SIDE SHALL BE STAGGERED.

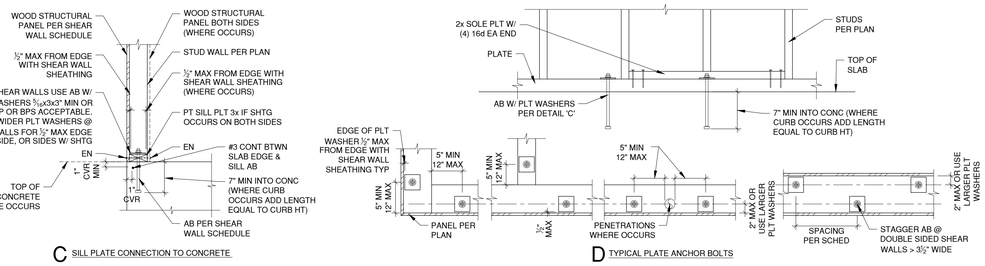

C SILL PLATE CONNECTION TO CONCRETE

D TYPICAL PLATE ANCHOR BOLTS

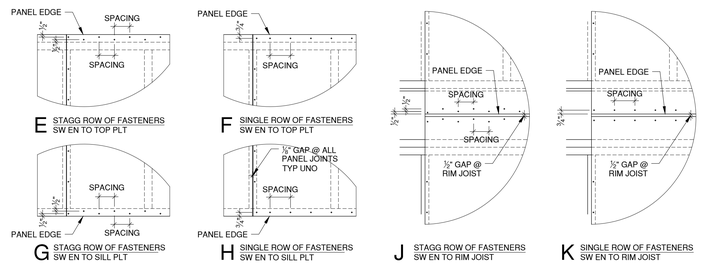

TYPICAL STUD WALL DETAILS

SCALE:1"=1'-0" | 11

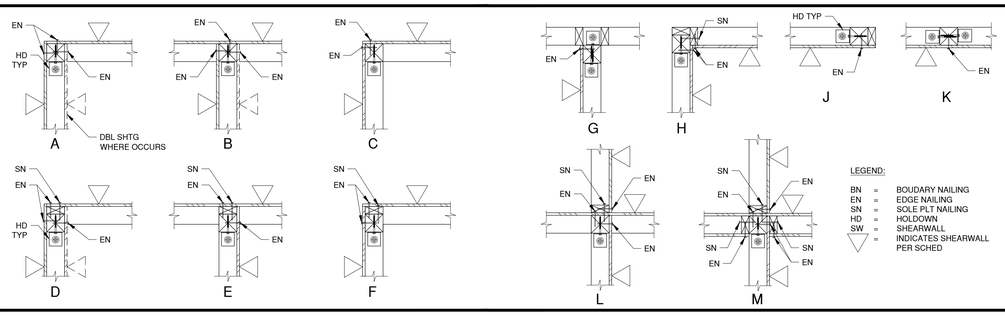

TYP SW INTERSECTIONS (W/ HOLDOWNS)

SCALE:1"=1'-0" | 12

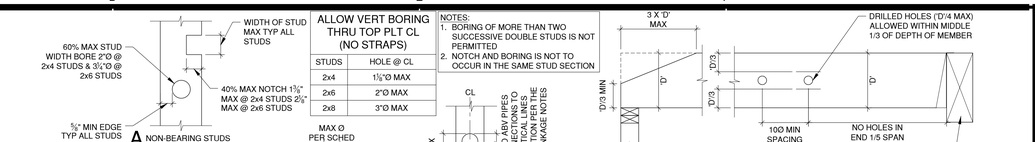

ALLOWABLE NOTCHING & HOLES

SCALE:1"=1'-0" | 1

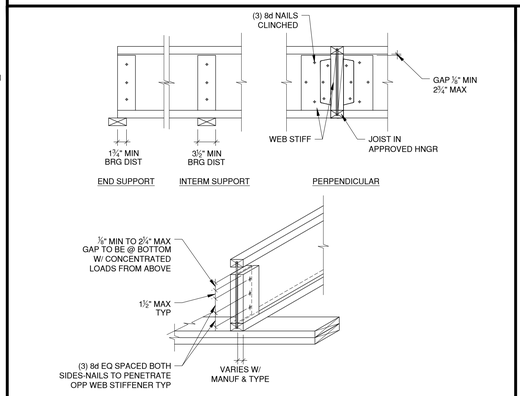

TJI WEB REINFORCING

SCALE:1"=1'-0" | 6

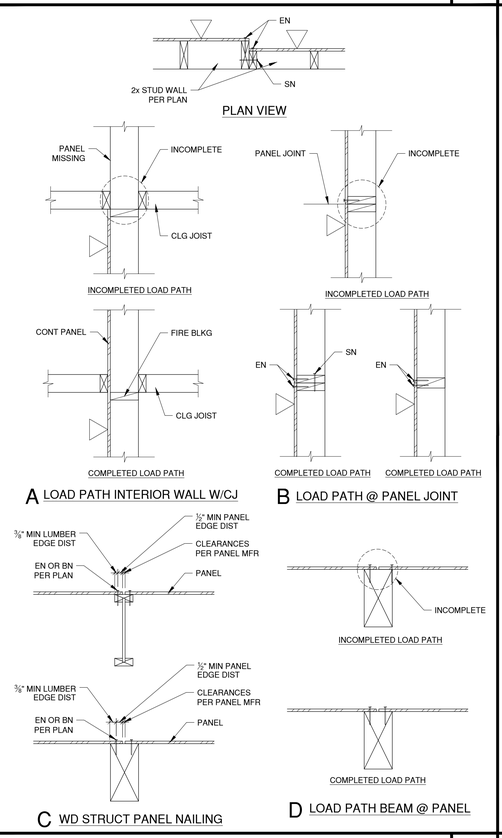

SHEAR TRANSFER DETAIL

SCALE:1"=1'-0" | 8

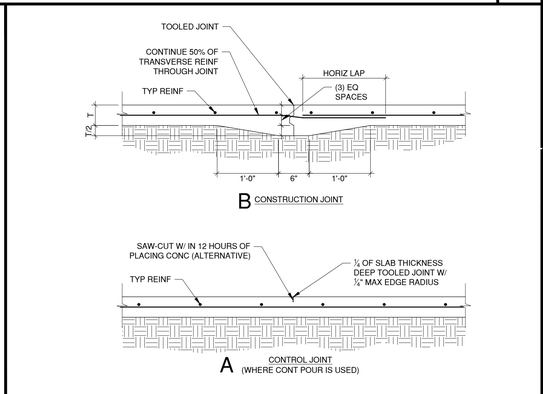

SLAB JOINTS

SCALE:1"=1'-0" | 2

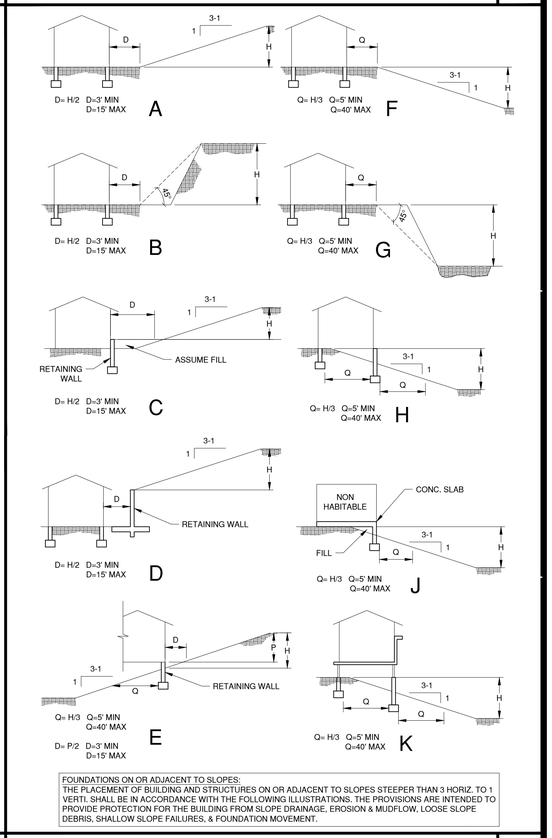

FDN CLEARANCES FROM SLOPES

SCALE:1"=1'-0" | 4

AGENCY

REVIEWED FOR CODE COMPLIANCE BY: WILLDAN ENGINEERING

Approval of these plans & specifications shall not be construed to be a permit for, or an approval of any violation of any Federal, State, County or City laws or ordinances. One set of approved plans must be kept on the job until completion.

10:04:39 AM Jul 21, 2025

PTN_____ APPL_____

FLEWELLING & MOODY
architecture planning interiors

HEADQUARTERS OFFICE:
99 South Lake Avenue, Suite 300
Pasadena, CA 91101
Phone: 323.543.8300
E-Mail: fm-pasadena@flewelling-moody.com

ANTELOPE VALLEY OFFICE:
1035 West Lancaster Boulevard
Lancaster, California 93534
Phone: 661.949.0771
E-Mail: fm-lancaster@flewelling-moody.com

An Employee Owned Corporation

ARCHITECT

CONSULTANT

REGISTERED PROFESSIONAL ENGINEER JEFFREY SCOTT LUNDBERG No.6433 STRUCTURAL STATE OF CALIFORNIA

RGSE inc.
Structural Engineers
2720 Cochran St. Suite 8B
Simi Valley, CA 93065
P: 805.522.3379
www.rgseinc.com
info@rgseinc.com

Drawn by aaronc@rgseinc.com
Checked by sokheanc@rgseinc.com

Revisions

No.	Date	Description

All dimensions must be checked at the job by the contractor who accepts full responsibility for their accuracy under the contract. These plans & the specifications in connection therewith have been prepared for a specific site. Any and all responsibility for their use in whole or in part on any other site is hereby disclaimed by Flewelling & Moody.

CITY OF RIDGECREST

SGT. JOHN PINNEY MEMORIAL POOL REPLACEMENT PROJECT

205 S WARNER ST, RIDGECREST,CA 93555

TYPICAL DETAILS

Job No. 3055-0100

Date 04-18-2025

S0.20

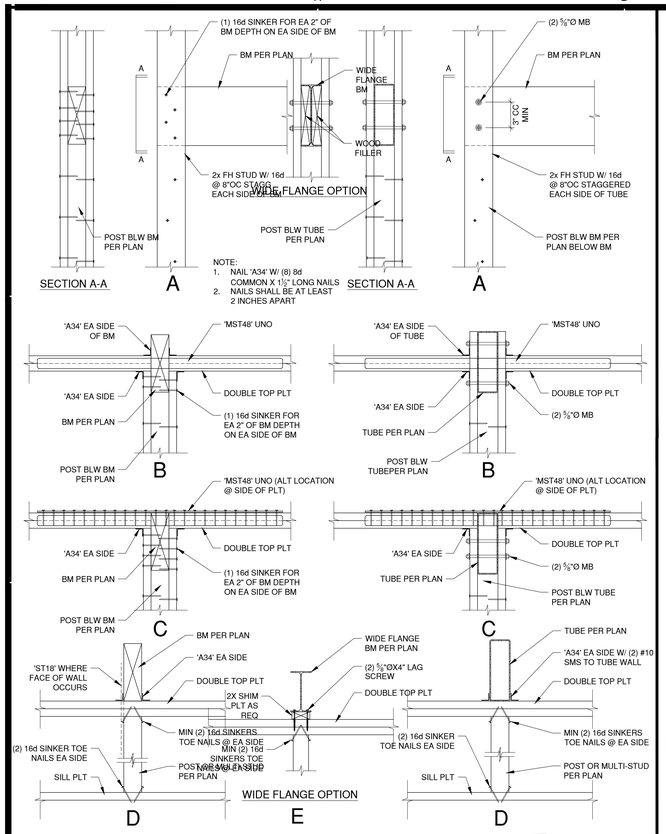

BEAM POCKET

SCALE:1"=1'-0" | 14

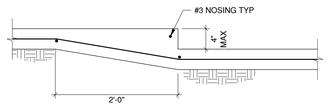

DEPRESSED SLAB

SCALE:1"=1'-0" | 15

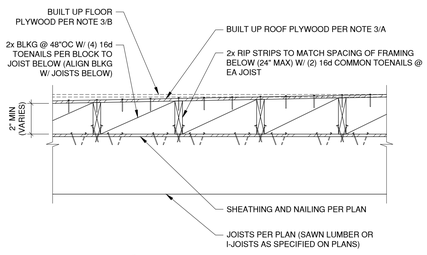

A PERPENDICULAR TO ROOF/FLOOR FRAMING

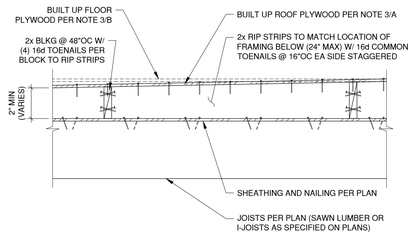

B PARELLEL TO ROOF/FLOOR FRAMING

NOTES:
1. DETAIL APPLIES TO ROOF OR FLOOR AS APPLICABLE.
2. FOR SLOPE AT ROOF BUILT UP CONSTRUCTION SEE ARCH'L DRAWINGS.
3. UNLESS OTHERWISE SPECIFIED ON PLANS, BUILT UP SHEATHING SHALL BE AS FOLLOWS:
   A. ROOF: ⅝" CDX PLYWOOD SHEATHING, SPAN RATING 32/16, NAILED WITH 8d COMMONS SPACED @ 6"OC ALONG ALL BOUNDARIES (BN) AND PANEL EDGES (EN), 12"OC ALONG INTERMEDIATE SUPPORTS (FIELD) (FN)
   B. FLOOR/OCCUPIED DECK: ¾" CDX PLYWOOD SHEATHING, SPAN RATING 48/24, NAILED WITH 8d COMMONS SPACED @ 6"OC ALONG ALL BOUNDARIES (BN) AND PANEL EDGES (EN), 12"OC ALONG INTERMEDIATE SUPPORTS (FIELD) (FN).

TYP BUILT UP FLOOR/ROOF

SCALE:1"=1'-0" | 16

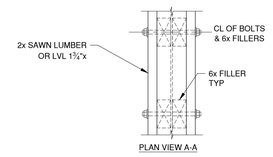

PLAN VIEW A-A

HANGER SCHEDULE - MANUFACTURER: SIMPSON STRONGTIE					
TOP MOUNT HANGER (SEE NOTE 1)			FACE MOUNT HANGER (SEE NOTE 1)		
JOIST/BEAM SIZE	HANGER TYPE		JOIST/BEAM SIZE	HANGER TYPE	
ALL SAWN LUMBER UNO	SIMPSON HUTF	ESR-2553 COLA RR25800	ALL SAWN LUMBER UNO	SIMPSON HU	ESR-2549 COLA RR25807
2x6 THRU 2x16	SIMPSON LB	ESR-2553 COLA RR25800	2x6 THRU 2x10	SIMPSON LUS	ESR-2549 COLA RR25807
2-2x6 THRU 2-2x14	SIMPSON HUSTF	ESR-2553 COLA RR25800	2-2x6 THRU 2-2x10	SIMPSON LUS	ESR-2549 COLA RR25807
4x6 THRU 4x14	SIMPSON HUSTF	ESR-2553 COLA RR25800	4x6 THRU 4x16	SIMPSON HHUS	ESR-2552 COLA RR25801
ALL I-JOIST UNO OR 1¾" LVL DECK JOIST	SIMPSON BA	ESR-2615 COLA RR25802	ALL I-JOIST UNO	SIMPSON MIU	ESR-2552 COLA RR25801
SINGLE I-JOIST TO WOOD BEAM 9½ THRU 16 DEEP	SIMPSON ITS	ESR-2615 COLA RR25803	SINGLE I-JOIST TO WOOD BEAM 9½ THRU 16 DEEP	SIMPSON IUS	ESR-2552 COLA RR25801
ALL PSL/LVL/LSL BEAMS UNO	SIMPSON HGLTV	ESR-2615 COLA RR25803	ALL PSL/LVL/LSL BEAMS UNO	SIMPSON HGU	ESR-2552 COLA RR25801
3½" & 5¼" PSL/LVL/LSL UP TO 11⅞" DEEP	SIMPSON GLTV	ESR-2615 COLA RR25803	3½" & 5¼" PSL/LVL/LSL UP TO 11⅞" DEEP	SIMPSON MGU	ESR-2552 COLA RR25801
ALL GLULAM BEAMS UNO	SIMPSON EG	ESR-2615 COLA RR25803	ALL GLULAM BEAMS UNO	SIMPSON HHGU	ESR-2552 COLA RR25801

NOTES:
1. PROVIDE TOP MOUNT HANGERS. FACE MOUNT HANGERS SHALL BE ALLOWED ONLY WHERE SPECIFICALLY INDICATED ON THE PLANS OR DETAILS.
2. PROVIDE SKEWED, SLOPED HANGERS AS REQ'D
3. PROVIDE OFFSET HANGER AT EDGE CONDITIONS AS NEEDED.

A - HANGER SCHEDULE

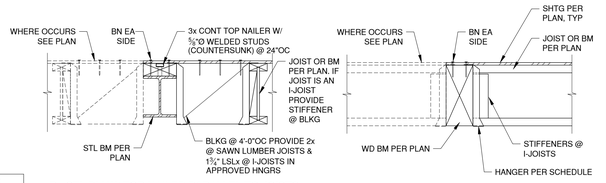

B - STL BM W/ TOP NAILER PARALLEL TO JOISTS

E - WD BM TO JOIST OR WOOD BEAM CONN

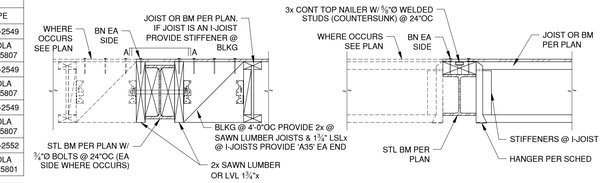

C - STL BM W/ SIDE NAILERS PARALLEL TO JOISTS

F - STL BM W/ TOP NAILER PERPEND TO JOISTS

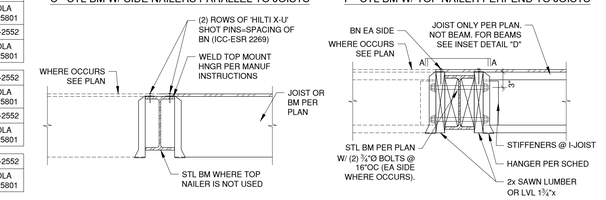

D - WD BM TO STL BM W/ OUT TOP NAILER

G - STL BM W/ SIDE NAILERS PERPEND TO JOISTS

TYP BEAM/JOIST CONN

SCALE:1"=1'-0" | 6

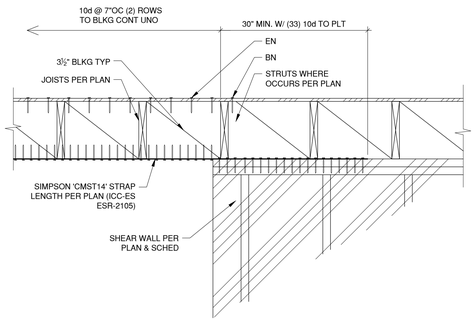

A DRAG STRUT TO PLATE

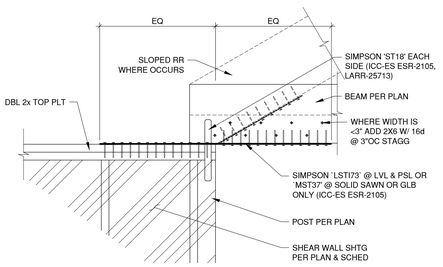

B STRUT TO PLATE

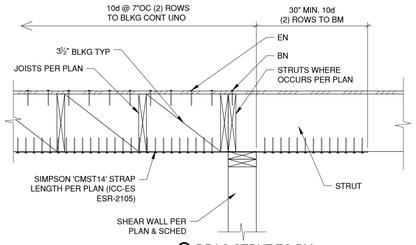

C DRAG STRUT TO BM

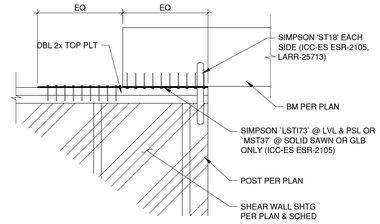

B (ALT) STRUT TO PLATE
ALT LOCATION TO HIDE STRAP

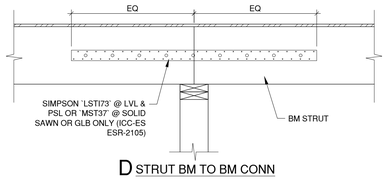

D STRUT BM TO BM CONN

STRUT DETAILS

SCALE:1"=1'-0" | 8

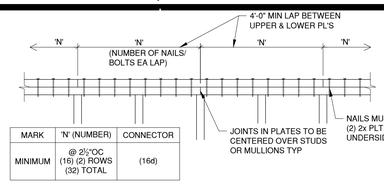

MARK	'N' (NUMBER)	CONNECTOR
MINIMUM	@ 2½"OC (16) (2) ROWS (32) TOTAL	(16d)

A NAILED SPLICE

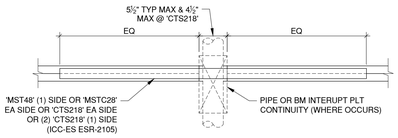

B STRAP SPLICE

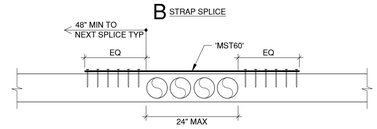

C PIPE GROUPS THRU PLT

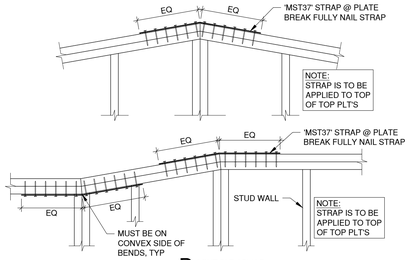

D BENT PLT SPLICE

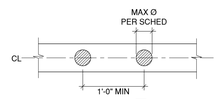

E ALLOW HOLES

ALLOW VERT BORING THRU TOP PLT CL (NO STRAPS)	
STUDS	HOLE @ CL
2x4	1⅛"Ø MAX
2x6	2"Ø MAX
2x8	3"Ø MAX

TOP PLATE SPLICE (5K ALLOW)

SCALE:1"=1'-0" | 2

NOTE:
TABLES IN THIS DETAIL CONTAIN REINFORCEMENT LAP SPLICE LENGTHS THAT ACHIEVE NOT ONLY BUILDING CODE COMPLIANCE, BUT ALSO COMPLIANCE WITH THE 'STANDARD PRACTICE FOR BRACING MASONARY WALLS UNDER CONSTRUCTION (WHICH IS IMPORTANT FOR LIFE SAFETY AT THE JOB SITE).

THEREFORE, THE VALUES INCLUDED IN THE TABLES ARE THE MORE RESTRICTIVE OF: 1.) THE LAP LENGTHS DETERMINED USING THE TMS 402/602 AND, 2.) 48 BAR DIAMETER (THE 24 HOUR SPLICE LENGTH CRITERIA FROM THE 'STANDARD PRACTICE FOR BRACING'). MANY OF THE LISTED VALUES ARE CONTROLLED BY THE 48 BAR DIAMETER CRITERIA, WHICH IS NECESSARY FOR THE DEVELOPMENT OF BOTH INTERNAL AND EXTERNAL TEMPORARY BRACING IN THE VAST MAJORITY OF WALL CONDITIONS.



'd' = .5 X ACTUAL UNIT THICKNESS

TABLE #1- LAP SPLICE LENGTHS FOR MASONRY WALLS (INCHES)

BARS CENTERED IN WALL			
BAR SIZE	8" CMU	12" CMU	16" CMU
#3	18	18	18
#4	24	24	24
#5	30	30	30
#6	**38**	36	36
#7	-	42	42
#8	-	**50**	48
#9	-	**64**	54
NOTE: TABLE DOES NOT APPLY TO EPOXY COATED BARS			

TABLE #2- LAP SPLICE LENGTHS FOR MASONRY WALLS (INCHES)

BARS PLACED NEAR EDGE			
BAR SIZE	8" CMU	12" CMU	16" CMU
#3	18	18	18
#4	24	24	24
#5	**34**	**34**	**34**
#6	**64**	**64**	**64**
#7	-	**87**	**87**
#8	-	-	-
#9	-	-	-
NOTE: TABLE DOES NOT APPLY TO EPOXY COATED BARS			

LEGEND:
VALUES IN BOLD BASED ON TMS 402/602. ALL OTHER VALUES BASED ON STANDARD PRACTICE FOR BRACING MASONARY WALLS UNDER CONSTRUCTION.

DESIGN CRITERIA:
f_y = 60,000 PSI
f'_m = 2,000 PSI

CMU WALL REINF LOCATION & LAP SPLICE

SCALE:1"=1'-0" | 4

AGENCY

REVIEWED FOR CODE COMPLIANCE BY: WILLDAN ENGINEERING

Approval of these plans & specifications shall not be construed to be a permit for, or an approval of any violation of any Federal, State, County or City laws or ordinances. One set of approved plans must be kept on the job until completion.

10:04:41 AM Jul 21, 2025

PTN_____ APPL_____

FLEWELLING & MOODY
architecture planning interiors

HEADQUARTERS OFFICE:
99 South Lake Avenue, Suite 300
Pasadena, CA 91101
Phone: 323.543.8300
E-Mail: fm-pasadena@flewelling-moody.com

ANTELOPE VALLEY OFFICE:
1035 West Lancaster Boulevard
Lancaster, California 93534
Phone: 661.949.0771
E-Mail: fm-lancaster@flewelling-moody.com

An Employee Owned Corporation

ARCHITECT

CONSULTANT

REGISTERED PROFESSIONAL ENGINEER JEREMIC SCOTT LUNDBERG No.6432 STRUCTURAL STATE OF CALIFORNIA

RGSE inc.
Structural Engineers
2720 Cochran St. Suite 8B
Simi Valley, CA 93065
P: 805.522.3379
www.rgseinc.com
info@rgseinc.com

Drawn by aaronc@rgseinc.com
Checked by sokheanc@rgseinc.com

Revisions

No.	Date	Description

All dimensions must be checked at the job by the contractor who accepts full responsibility for their accuracy under the contract. These plans & the specifications in connection therewith have been prepared for a specific site. Any and all responsibility for their use in whole or in part on any other site is hereby disclaimed by Flewelling & Moody.

CITY OF RIDGECREST

SGT. JOHN PINNEY MEMORIAL POOL REPLACEMENT PROJECT

205 S WARNER ST, RIDGECREST,CA 93555

TYPICAL DETAILS

Job No. 3055-0100

Date 04-18-2025

S0.30

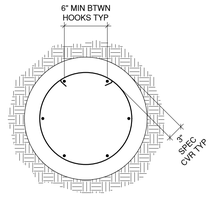

SECTION A-A

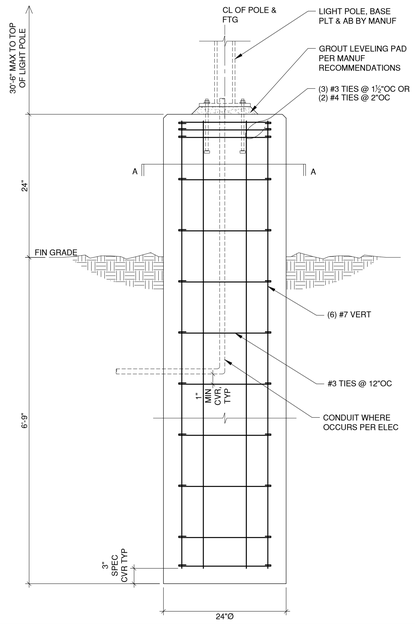

LIGHT POLE FOOTING SCALE:1"=1'-0" 14

- SCALE:1"=1'-0" 15

- SCALE:1"=1'-0" 16

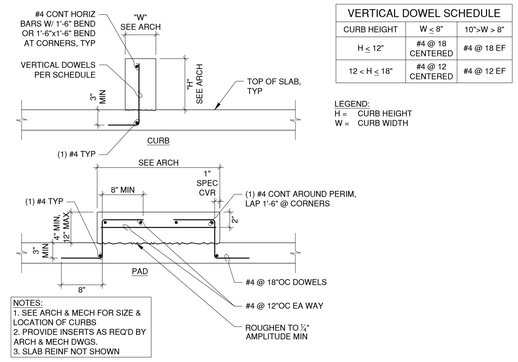

NOTES:
1. SEE ARCH & MECH FOR SIZE & LOCATION OF CURBS
2. PROVIDE INSERTS AS REQ'D BY ARCH & MECH DWGS.
3. SLAB REINF NOT SHOWN

VERTICAL DOWEL SCHEDULE		
CURB HEIGHT	W ≤ 8"	10">W > 8"
H ≤ 12"	#4 @ 18 CENTERED	#4 @ 18 EF
12 < H ≤ 18"	#4 @ 12 CENTERED	#4 @ 12 EF

LEGEND:
H = CURB HEIGHT
W = CURB WIDTH

CURBS & PADS SCALE:1"=1'-0" 9

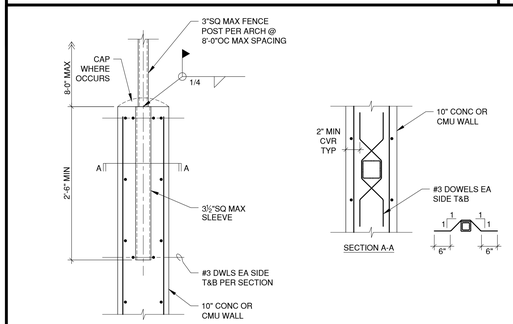

SECTION A-A

POST ON WALL SCALE:1"=1'-0" 10

CHEMICAL ANCHOR MIN. DISTANCES				
ROD DIAMETER	DRILL BIT DIAMETER	MIN EMBEDMENT	MIN EDGE DISTANCE	MIN SPACING
X 25.4 FOR mm				
⅜" Ø	½"	2½"	2½"	7"
½" Ø	⅝"	2¾"	3⅜"	8½"
⅝" Ø	¾"	3⅜"	3¾"	10"
¾" Ø	⅞"	3½"	5⅛"	13½"
⅞" Ø	1"	3¾"	5¾"	15½"
1" Ø	1⅛"	4"	6¾"	18"
1¼" Ø	1⅜"	5"	8⅛"	22½"

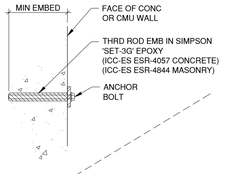

NOTES:
1. MINIMUM DIMENSIONS SHOWN. REFER TO PLANS FOR ACTUAL DIMENSION REQUIREMENTS.
2. BOLTS SHALL BE PLACED NO CLOSER THAN (12) BOLT DIA APART OR (6) BOLT DIA FROM END OF CONCRETE OR MASONRY.
3. INCREASE EMBEDMENT BY 2" FOR AB's IN THE TOP OF WALLS, COLUMNS, AND PILASTERS.
4. DOUBLE THE EMBED FOR ANCHOR BOLTS PLACED VERTICAL INTO FOUNDATIONS

A

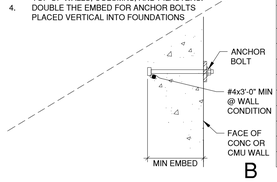

B

CAST-IN-PLACE ANCHOR BOLT MIN DISTANCES			
BOLT DIAMETER	MIN EMBEDMENT	MIN EDGE DISTANCE	MIN SPACING
x 25.4 FOR mm			
⅜" Ø	3"	2¼"	4½"
½" Ø	4"	3"	6"
⅝" Ø	4½"	3¾"	7½"
¾" Ø	5"	4½"	9"
⅞" Ø	6"	5¼"	10½"
1" Ø	7"	6"	12"
1⅛" Ø	8"	6¾"	13½"
1¼" Ø	9"	7½"	15"

ANCHOR BOLT DETAILS SCALE:1"=1'-0" 11

CHEMICAL ANCHOR SCHEDULE					
BAR SIZE	ROD Ø	DRILL BIT DIAMETER	MIN EMB	MIN EDGE DISTANCE	MIN SPACING
X 25.4 FOR mm					
#3	⅜" Ø	½"	4"	3½"	7"
#4	½" Ø	⅝"	6"	4"	8½"
#5	⅝" Ø	¾"	8"	5"	10"
#6	¾" Ø	⅞"	10"	7"	13½"
#7	⅞" Ø	1"	12"	8"	15½"
#8	1" Ø	1⅛"	14"	9"	18"
#9	1¼" Ø	1⅜"	16"	11"	22½"

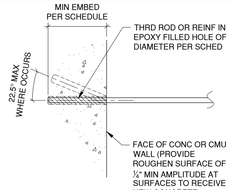

NOTES:
1. UNLESS NOTED ON THE DRAWINGS, DRILL AND EPOXY ANCHORS MAY NOT REPLACE CAST-IN-PLACE ANCHORS WITHOUT THE APPROVAL OF THE STRUCTURAL ENGINEER.
2. ALL WORK SHALL BE PERFORMED UNDER CONTINUOUS INSPECTION BY THE INSPECTOR OF RECORD.
3. EPOXY GROUT: SIMPSON 'SET-3G' (CONCRETE ICC-ES ESR-4057) (MASONRY ICC-ES ESR-4844) OR APPROVED EQUAL
4. PROVIDE HOLE DEPTH AND DIAMETER PER SCHEDULE UNLESS NOTED OTHERWISE ON PLANS.
   A. AVOID ANY EXISTING REINFORCING STEEL - RECOMMEND CONTRACTOR ALLOW FOR 5% RE-DRILLING. ALL ABANDONED HOLES SHALL BE GROUTED.
   B. WHEN INSTALLING CHEMICAL ANCHOR INTO PRE-STRESSED CONCRETE WITH PRE- OR POST-TENSIONED TENDONS, LOCATE TENDONS BY NON-DESTRUCTIVE METHODS PRIOR TO CHEMICAL ANCHOR INSTALLATION. TAKE GREAT CARE AND CAUTION TO AVOID DAMAGING EXISTING TENDONS AND PROVIDE A MINIMUM OF 2 INCHES CLEAR BETWEEN DRILLED HOLE AND EXISTING TENDONS. ANY COSTS TO REPAIR OR REPLACE TENDONS SHALL BE BORNE BY THE CONTRACTOR.
5. CLEAN HOLE PER MANUFACTURER'S SPECIFICATIONS BY VACUUM OR AIR PRESSURE. HOLE TO BE DRY PRIOR TO EPOXY APPLICATION.
6. PLACE EPOXY PER MANUFACTURER'S SPECIFICATIONS, WITH CAULKING GUN OR SIMILAR, FILLING HOLE FROM THE BOTTOM TO APPROXIMATELY 2/3 FULL.
7. PLACE ROD OR REBAR, ENSURING EPOXY RISES TO THE SURFACE AND FILLS THE HOLE COMPLETELY. PROVIDE SUPPORT FOR ROD OR REBAR UNTIL EPOXY CURES.

TYP REINF DRILL & EPOXY DETAIL SCALE:1"=1'-0" 12

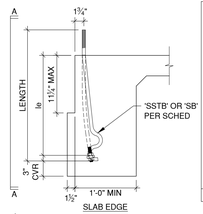

SLAB EDGE

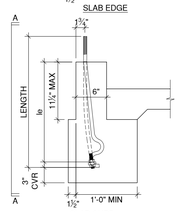

SLAB CURB

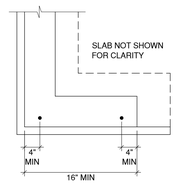

PLAN VIEW

CORNER INSTALLATION (INSTALL WITH ARROW ON TOP OF THE BOLT ORIENTED AS SHOWN)	NON-CORNER INSTALLATION (BOLT MAY BE INSTALLED @ 45° TO 135° AS SHOWN)	CORNER INSTALLATION (INSTALL WITH ARROW ON TOP OF THE BOLT ORIENTED AS SHOWN)
45° ANCHOR BOLT (TYP) 0° OUTER EDGE OF CONCRETE (TYP)	135° 90° 45° 45° 0°	135° 0°

PLAN VIEW OF SSTB & SB PLACEMENT IN CONCRETE

FOR TWO-POUR (4" SLAB) INSTALLATION LOADS:
- WHEN USING THE SSTB20, USE THE EQUIVALENT LOADS OF THE SSTB16.
- WHEN USING THE SSTB24, USE THE EQUIVALENT LOADS OF THE SSTB20.
- WHEN USING THE SSTB34 OR 36, USE THE EQUIVALENT LOADS OF THE SSTB28.

REFER TO HOLDOWN SCHEDULE FOR ANCHOR BOLT DESIGNATION

MODEL NO	DIMENSIONS (in.)			CODE REF
	DIA	LENGTH	MIN EMB le	
SSTB16	⅝	16⅜	12⅜	ESR-2611
SSTB20	⅝	24⅜	16⅜	ESR-2611
SSTB24	⅝	25⅜	20⅜	ESR-2611
SSTB28	⅞	32⅜	24⅞	ESR-2611
SB⅝x24	⅝	24	18	ESR-2611
SB⅞x24	⅞	24	18	ESR-2611
SB1x30	1	30	24	ESR-2611

ANCHOR EMBEDMENT LENGTH IS BASED ON A SINGLE POUR CONCRETE FOUNDATION WITHIN THE FOOTING DIMENSIONS. DOUBLE POUR FOUNDATION SYSTEMS, MASONRY WALLS AND MASONRY FOOTINGS MUST BE EVALUATED BY THE DESIGNER.

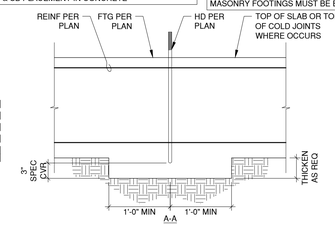

A-A

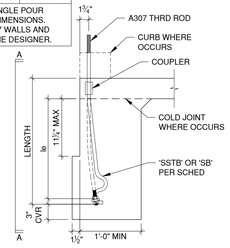

FOOTING WITH COLD JOINT

SSTB & SB BOLTS AT SLAB ON GRADE SCALE:1"=1'-0" 1

SECTION A-A

FENCE FTG W/ CONC CURB OR HDR SCALE:1"=1'-0" 6

FENCE OVER RETAINING WALL SCALE:1"=1'-0" 8

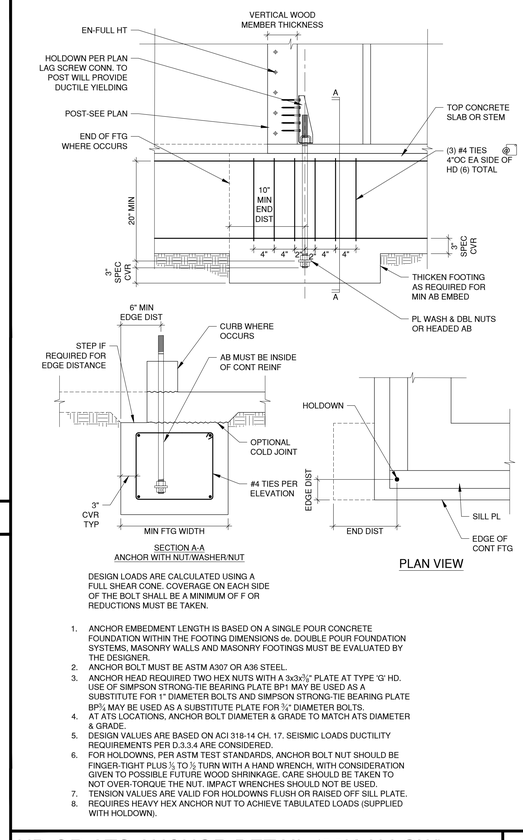

SECTION A-A
ANCHOR WITH NUT/WASHER/NUT

PLAN VIEW

DESIGN LOADS ARE CALCULATED USING A FULL SHEAR CONE. COVERAGE ON EACH SIDE OF THE BOLT SHALL BE A MINIMUM OF F OR REDUCTIONS MUST BE TAKEN.

1. ANCHOR EMBEDMENT LENGTH IS BASED ON A SINGLE POUR CONCRETE FOUNDATION WITHIN THE FOOTING DIMENSIONS de. DOUBLE POUR FOUNDATION SYSTEMS, MASONRY WALLS AND MASONRY FOOTINGS MUST BE EVALUATED BY THE DESIGNER.
2. ANCHOR BOLT MUST BE ASTM A307 OR A36 STEEL.
3. ANCHOR HEAD REQUIRED TWO HEX NUTS WITH A 3x3x¾" PLATE AT TYPE 'G' HD. USE OF SIMPSON STRONG-TIE BEARING PLATE BP1 MAY BE USED AS A SUBSTITUTE FOR 1" DIAMETER BOLTS AND SIMPSON STRONG-TIE BEARING PLATE BP⅝ MAY BE USED AS A SUBSTITUTE PLATE FOR ⅝" DIAMETER BOLTS.
4. AT ATS LOCATIONS, ANCHOR BOLT DIAMETER & GRADE TO MATCH ATS DIAMETER & GRADE.
5. DESIGN VALUES ARE BASED ON ACI 318-14 CH. 17. SEISMIC LOADS DUCTILITY REQUIREMENTS PER D.3.3.4 ARE CONSIDERED.
6. FOR HOLDOWNS, PER ASTM TEST STANDARDS, ANCHOR BOLT NUT SHOULD BE FINGER-TIGHT PLUS ⅓ TO ⅔ TURN WITH A HAND WRENCH, WITH CONSIDERATION GIVEN TO POSSIBLE FUTURE WOOD SHRINKAGE. CARE SHOULD BE TAKEN TO NOT OVER-TORQUE THE NUT. IMPACT WRENCHES SHOULD NOT BE USED.
7. TENSION VALUES ARE VALID FOR HOLDOWNS FLUSH OR RAISED OFF SILL PLATE.
8. REQUIRES HEAVY HEX ANCHOR NUT TO ACHIEVE TABULATED LOADS (SUPPLIED WITH HOLDOWN).

HD OR ATS ANCHOR DETAIL (30K ALLOW) SCALE:1"=1'-0" 3

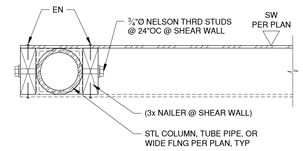

COLUMN NAILER SCALE:1"=1'-0" 4

AGENCY

REVIEWED FOR CODE COMPLIANCE BY: WILLDAN ENGINEERING

Approval of these plans & specifications shall not be construed to be a permit for, or an approval of any violation of any Federal, State, County or City laws or ordinances. One set of approved plans must be kept on the job until completion.

10:04:43 AM Jul 21, 2025

PTN_____ APPL_____

FLEWELLING & MOODY
architecture planning interiors

HEADQUARTERS OFFICE:
99 South Lake Avenue, Suite 300
Pasadena, CA 91101
Phone: 323.543.8300
E-Mail: fm-pasadena@flewelling-moody.com

ANTELOPE VALLEY OFFICE:
1035 West Lancaster Boulevard
Lancaster, California 93534
Phone: 661.949.0771
E-Mail: fm-lancaster@flewelling-moody.com

An Employee Owned Corporation

ARCHITECT

CONSULTANT

REGISTERED PROFESSIONAL ENGINEER JEFFREY SCOTT DOWNEY No.6432 STRUCTURAL STATE OF CALIFORNIA

RGSE inc.
Structural Engineers
2720 Cochran St. Suite 8B
Simi Valley, CA 93065
P: 805.522.3379
www.rgseinc.com
info@rgseinc.com

Drawn by aaronc@rgseinc.com

Checked by sokheanc@rgseinc.com

Revisions

No.	Date	Description

All dimensions must be checked at the job by the contractor who accepts full responsibility for their accuracy under the contract. These plans & the specifications in connection therewith have been prepared for a specific site. Any and all responsibility for their use in whole or in part on any other site is hereby disclaimed by Flewelling & Moody.

CITY OF RIDGECREST

SGT. JOHN PINNEY MEMORIAL POOL REPLACEMENT PROJECT

205 S WARNER ST, RIDGECREST,CA 93555

TYPICAL DETAILS

Job No. 3055-0100

Date 04-18-2025

S0.40

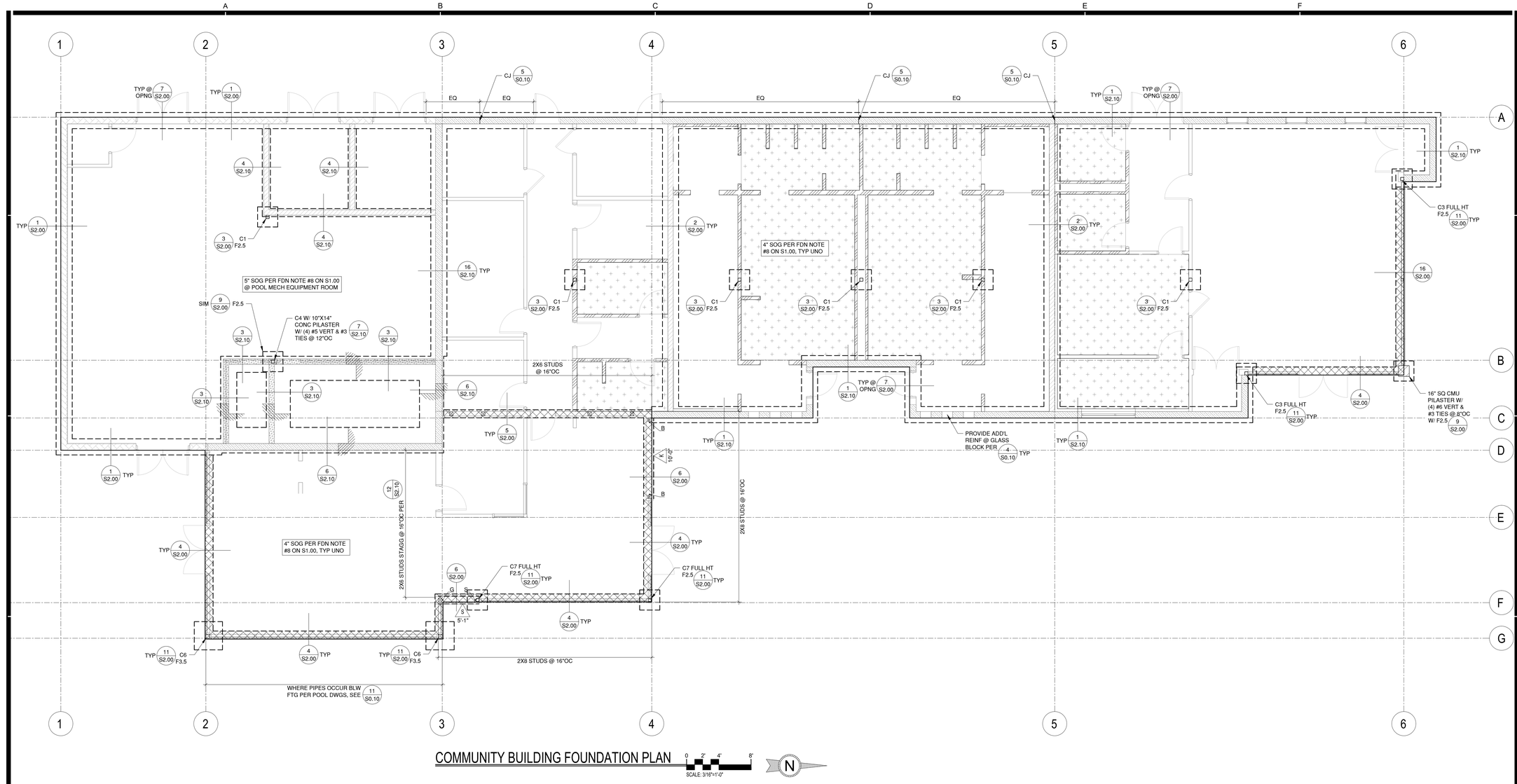

COMMUNITY BUILDING FOUNDATION PLAN

0 2' 4' 8'

SCALE: 3/16"=1'-0"

N

FOOTING SCHEDULE (3000 PSF ALLOW. BRNG.)			
MARK	FOOTING SIZE	THICKNESS	REINFORCEMENT
F2.5	2'-6" X 2'-6"	1'-0"	(3) #5 EW
F3.5	3'-6" X 3'-6"	1'-0"	(4) #5 EW T&B
F4.0	4'-0" X 4'-0"	1'-0"	(5) #5 EW T&B
F7 X 10	7'-0" X 10'-0"	1'-6"	#6 @ 12"OC EW T&B

NOTE: EW = EACH WAY T&B = TOP & BOTTOM

STEEL COLUMN SCHEDULE				
MARK	COLUMN SIZE	BASE PLATE SIZE	ANCHOR BOLTS	BOLT LAYOUT
C1	HSS 4 X 4 X ¼	10" SQ X ¾" THK	(4) ¾"Ø X 9" EMB	A
C2	HSS 6 X 6 X ¼	12" SQ X ¾" THK	(4) ¾"Ø X 24" EMB	A
C3	HSS 6 X 6 X ½	6½" X 12½" X ¾" THK	(2) ¾"Ø X 9" EMB	H
C4	HSS 4 X 4 X ¼	5" X 10" X ¾" THK	(2) ¾"Ø X 18" EMB	G
C5	HSS 12 X 8 X ⅝	18 X 14 X 1" THK (GR 50)	(4) 1⅛"Ø(ASTM F1554, GRADE 105) X 36" EMB	A
C6	HSS 6 X 6 X ¼	12"SQ X ¾" THK	(4) ¾"Ø X 9" EMB	A
C7	HSS 4½ X 4½ X ¼	10½"SQ X ¾" THK	(4) ¾"Ø X 9" EMB	A

NOTES:
AT BASE PLATES W/ < (4) AB'S ADD TEMP BRACING FOR LATERAL STABILITY IN (2) DIRECTIONS.

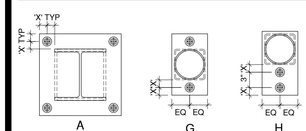

'X' = 1½" FOR AB ≤ ⅞"Ø
1¾ x Ø FOR AB > ⅞"Ø
TYP UNO

SHEAR WALL SCHEDULE									
MARK	ALLOW SHEAR	STUD OR BLKG AT ADJOINING PANEL EDGES	PERIODIC SPEC INSP PER 1705.11.2	APA RATED OSB	(EN) EDGE NAILING	(FN) FIELD NAILING	MUDSILL ANCHORS		'A35' OR 'LTP4' WHERE "PER SCHED" NOTED ON DET
							2X MUDSILL	3X MUDSILL	
K	280 #/'	2x	NO	15/32" STR 1	8d @ 6"OC	12"OC	⅝"Ø @ 4'-0"	¾"Ø @ 4'-0"	19"OC MAX
S	1600 #/'	3x	YES	15/32" STR 1 BOTH SIDES	10d @ 2"OC BOTH SIDES	8"OC	N/A	⅝"Ø @ 1'-1"	6"O.C. MAX BOTH SIDES

NOTES:
1) 3x SILL PL ONLY OCCURS AT FOUNDATIONS AND STRUCTURAL SLABS, AND **NOT** ON UPPER FLOORS.
2) FOR INFO NOT SHOWN SEE DETAIL
11 S0.20

HOLDOWN SCHEDULE									
MARK	ALLOW. LOAD	ICC ESR #	COLA ALLOW. LOAD	LARR #	MIN. WOOD MEMBER THICKNESS	HOLDOWN	POST FASTENERS	FDN. BOLT	DETAIL @ SLAB ON GRADE
B	4565 lb.	2330, 2611	3423 lb.	25720, 25827	4X	SIMPSON HDU4-SDS2.5	(10) SDS ¼" X 2½" SCREWS	SSTB20/ SB⅝X24	1 S0.40
G	14390 lb.	2330	10793 lb.	25720	4X8 or 6X6 MIN.	SIMPSON HDU14-SDS 2.5	(36) SDS ¼" X 2½" SCREWS	1"Ø A.T.R.	3 S0.40
S	N/A	N/A	N/A	N/A	4X NAILER	STL. COL. PER PLAN	N/A	N/A	4 S0.40

NOTES:
1) MAXIMUM HOLDOWN SYSTEM DEFLECTION PER FLOOR SHALL BE .2" TYP UNO.
2) WHEN ALTERNATIVE CONTINUOUS ROD SYSTEMS ARE USED TO RESIST LIGHT-FRAME SHEAR WALL OVERTURNING FORCES, CALCULATIONS MUST BE SUBMITTED TO THE CODE OFFICIAL CONFIRMING THAT THE TOTAL VERTICAL DISPLACEMENT, WHICH WOULD INCLUDE STEEL ROD ELONGATION AND THE SHRINKAGE COMPENSATING DEVICE DEFLECTION, IS LESS THAN OR EQUAL TO 0.200 INCH (5 mm) FOR EACH STORY, OR BETWEEN RESTRAINTS, WHICHEVER IS MORE RESTRICTIVE. USING ALLOWABLE STRESS DESIGN (ASD). SHEAR WALL DRIFT LIMIT CALCULATIONS MUST CONSIDER THE 0.200 INCH VERTICAL DISPLACEMENT LIMIT.
3) HOLDOWN CONNECTION BOLTS AND NUTS SHALL BE TORQUED ⅓ TURN BEYOND FINGER TIGHT OR AS REQUIRED BY THE MANUF. (INSPECTOR SHALL VERIFY BY RANDOM INSPECTION PRIOR TO COVERING THE WALLS).
4) ALL HOLDOWNS ANCHOR BOLTS SHALL BE TIED IN PLACE PRIOR TO POURING CONCRETE.
5) A.T.R. INDICATES ALL THREADED ROD.

FOUNDATION NOTES:

1. SEE FOUNDATION NOTES ON SHEET S0.01 FOR DESIGN SOIL BEARING PRESSURE, ETC.
2. C1 -INDICATES COLUMN MARK, FOR SIZE SEE SCHEDULE SHEET S1.00.
   F1 -INDICATES FOOTING MARK, FOR SIZE SEE SCHEDULE SHEET S1.00.
3. K INDICATES SHEAR WALL MARK, SEE SCHEDULE SHEET S1.00.
4. A INDICATES A HOLDOWN MARK, SEE SCHEDULE SHEET S1.00.
5. SEE ARCH. FOR ALL DIMENSIONS & CONDITIONS NOT SHOWN.
6. PRIOR TO THE CONTRACTOR REQUESTING A BUILDING DEPT FOUNDATION INSPECTION, THE SOILS ENGINEER SHALL ADVISE THE BUILDING OFFICIAL IN WRITING THAT:
   A. THE BUILDING PAD WAS PREPARED IN ACCORDANCE WITH THE SOILS REPORT.
   B. THE UTILITY TRENCHES HAVE BEEN PROPERLY BACK FILLED & COMPACTED.
   C. THE FOUNDATION EXCAVATIONS COMPLY WITH THE INTENT OF THE SOILS REPORT.
7. ALL HOLDOWNS AND ANCHOR BOLTS AT SHEARWALL SHALL BE SET IN PLACE BY TEMPLATE PRIOR TO FOUNDATIONS INSPECTION AND RETIGHTENED PRIOR TO COVERING OF WALLS.
8. TYPICAL CONCRETE SLAB ON GRADE SHALL BE 4" THICK WITH #4 @ 18"OC EA WAY MID HT OVER 4" OF SAND W/ 10MIL VISQUEEN VAPOR BARRIER MID HT SLAB ON GRADE. IN AREAS WITH VEHICLE, OR HEAVY STORAGE LOADS SHALL BE 5" THICK W/ #4 @ 18"OC EA. WAY MID HT. THE MAXIMUM SPACING OF THE CONTROL JOINTS SHALL BE 30X THE SLAB THICKNESS BEFORE 7 DAYS OF CURING. SEE SOILS REPORT FOR SPECIAL SLAB REQUIREMENTS.
9. ALL FOOTINGS ARE CENTERED UNDER COLUMNS AND BEARING WALLS UNLESS NOTED OTHERWISE ON PLANS AND DETAILS.
10. SEE ARCHITECTURAL PLANS FOR LOCATIONS OF ALL WALL OPENINGS, SLOPED AND DEPRESSED SLABS, CONCRETE CURBS, ADDITIONAL EMBEDDED ITEMS NOT SHOWN ON THESE DRAWINGS. VERIFY ALL BUILDING DIMENSIONS, SLOPES AND DEPRESSED SLAB DIMENSIONS WITH ARCHITECTURAL PLANS BEFORE BEGINNING WORK. REPORT ANY DISCREPANCIES TO THE ARCHITECT FOR RESOLUTION.
11. SEE GENERAL NOTES AND SPECIFICATIONS FOR SPECIAL GRADING REQUIREMENTS UNDER FOOTINGS.
12. COLUMNS ARE ONE SIZE FROM FOUNDATION TO ROOF UNLESS OTHERWISE NOTED ON PLANS
13. ALL DIMENSIONS SHOWN ARE TO EDGE OF CONCRETE SLAB, CENTER OF INTERIOR WALL, OR CENTERLINE OF POST OR COLUMN. REFER TO ARCHITECTURAL PLANS FOR OTHER DIMENSIONS.
14. ALL COLUMNS ARE CENTERED ON THE GRID LINES UNLESS NOTED OTHERWISE.
15. ALL CONCRETE FLOORS TO BE FLAT UNO.
16. SURFACE WATER SHALL DRAIN AWAY FROM THE BUILDING. COORDINATE WITH CIVIL & LANDSCAPE.
17. CONTRACTOR SHALL COORDINATE ALL UNDERGROUND UTILITY WORK TO AVOID CONFLICTS WITH FOOTINGS.
18. CONTRACTOR SHALL SUBMIT PROPOSED FIRE RISER, CONDUIT, PIPING SLEEVE LOCATION FOR ENGINEER'S REVIEW PRIOR TO FOOTING CONSTRUCTION.
19. SEE ARCH'L AND CIVIL DRAWINGS FOR LOCATION OF MOISTURE BARRIER, CURBS, TRASH ENCLOSURES, EXTERIOR SLABS, DRAINAGE, RAMPS, WALKS, ETC.
20. FOR FOOTINGS OUTSIDE THE BUILDING ENVELOPE, COORDINATE TOP OF FOOTING ELEVATION WITH THE STRUCTURAL DETAILS AND WITH CIVIL AND LANDSCAPE.
21. BUILDING SLAB IS NOT DESIGNED TO SUPPORT CRANE LOADS, CONCRETE MIXING TRUCKS, OR OTHER SPECIFIC CONSTRUCTION LOADING. IF SUCH LOADS OCCUR, THE CONTRACTOR SHALL BE RESPONSIBLE FOR UPGRADING THE SLAB THICKNESS AND PROVIDING REINFORCING AS REQUIRED. ANY DAMAGE CAUSED TO THE SLAB SHALL BE REPAIRED AT THE CONTRACTOR'S EXPENSE PER THE OWNER'S REQUEST.
22. EXCAVATIONS SHALL BE MADE IN COMPLIANCE WITH CAL/OSHA REGULATIONS.

LEGEND:

- 8" CMU WALL W/ #5 VERT @ 16"OC & #5 HORIZ @ 16"OC
- 10" CMU WALL W/ #5 VERT @ 16"OC EF & #5 @ 16"OC HORIZ EF
- CANTILEVER CMU WALL W/ FTG PER 10 S2.00
- 10" PRE-INSULATED (HI-R-H) CMU WALL W/ #5 VERT @ 16"OC @ CENTERLINE OF GROUT & #5 HORIZ @ 16"OC (REFER TO MANUF REQUIREMENTS & RECOMMENDATIONS)
- CONC RETAINING WALL PER 3 S2.10
- WOOD STUD WALL PER FRAMING NOTE #2 & #3 ON S1.10 UNO
- WOOD STUD WALL W/ CURB PER ARCH & 9B S0.10
- 24" WIDE X 12" THK CONT FTG X 18" DP BLW LOWEST ADJACENT GRADE W/ (4) #4 T&B, (8) TOTAL
- 12" WIDE CONT FTG X 18" DP BLW LOWEST ADJACENT GRADE W/ (2) #4 T&B, (4) TOTAL
- AREA OF DEPRESSED SLAB PER ARCH & 15 S0.30

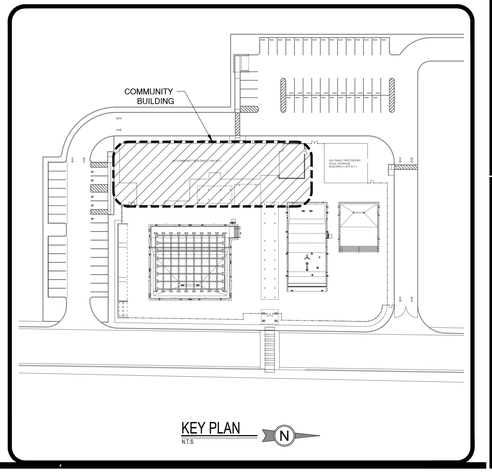

AGENCY

REVIEWED FOR CODE COMPLIANCE BY: WILLDAN ENGINEERING

Approval of these plans & specifications shall not be construed to be a permit for, or an approval of any violation of any Federal, State, County or City laws or ordinances. One set of approved plans must be kept on the job until completion.

10:04:45 AM Jul 21, 2025

PTN_____ APPL_____

FLEWELLING & MOODY
architecture planning interiors

HEADQUARTERS OFFICE:
99 South Lake Avenue, Suite 300
Pasadena, CA 91101
Phone: 323.543.8300
E-Mail: fm-pasadena@flewelling-moody.com

ANTELOPE VALLEY OFFICE:
1035 West Lancaster Boulevard
Lancaster, California 93534
Phone: 661.949.0771
E-Mail: fm-lancaster@flewelling-moody.com

An Employee Owned Corporation

ARCHITECT

CONSULTANT

REGISTERED PROFESSIONAL ENGINEER JEFFREY SCOTT LINDSEY No. 5052 STRUCTURAL STATE OF CALIFORNIA

RGSE inc.
Structural Engineers
2720 Cochran St. Suite 8B
Simi Valley, CA 93065
P: 805.522.3379
www.rgseinc.com
info@rgseinc.com

Drawn by aaronc@rgseinc.com

Checked by sokheanc@rgseinc.com

Revisions

No.	Date	Description

All dimensions must be checked at the job by the contractor who accepts full responsibility for their accuracy under the contract. These plans & the specifications in connection therewith have been prepared for a specific site. Any and all responsibility for their use in whole or in part on any other site is hereby disclaimed by Flewelling & Moody.

CITY OF RIDGECREST

SGT. JOHN PINNEY MEMORIAL POOL REPLACEMENT PROJECT

205 S WARNER ST, RIDGECREST,CA 93555

COMMUNITY BUILDING FOUNDATION PLAN

Job No. 3055-0100

Date 04-18-2025

S1.00

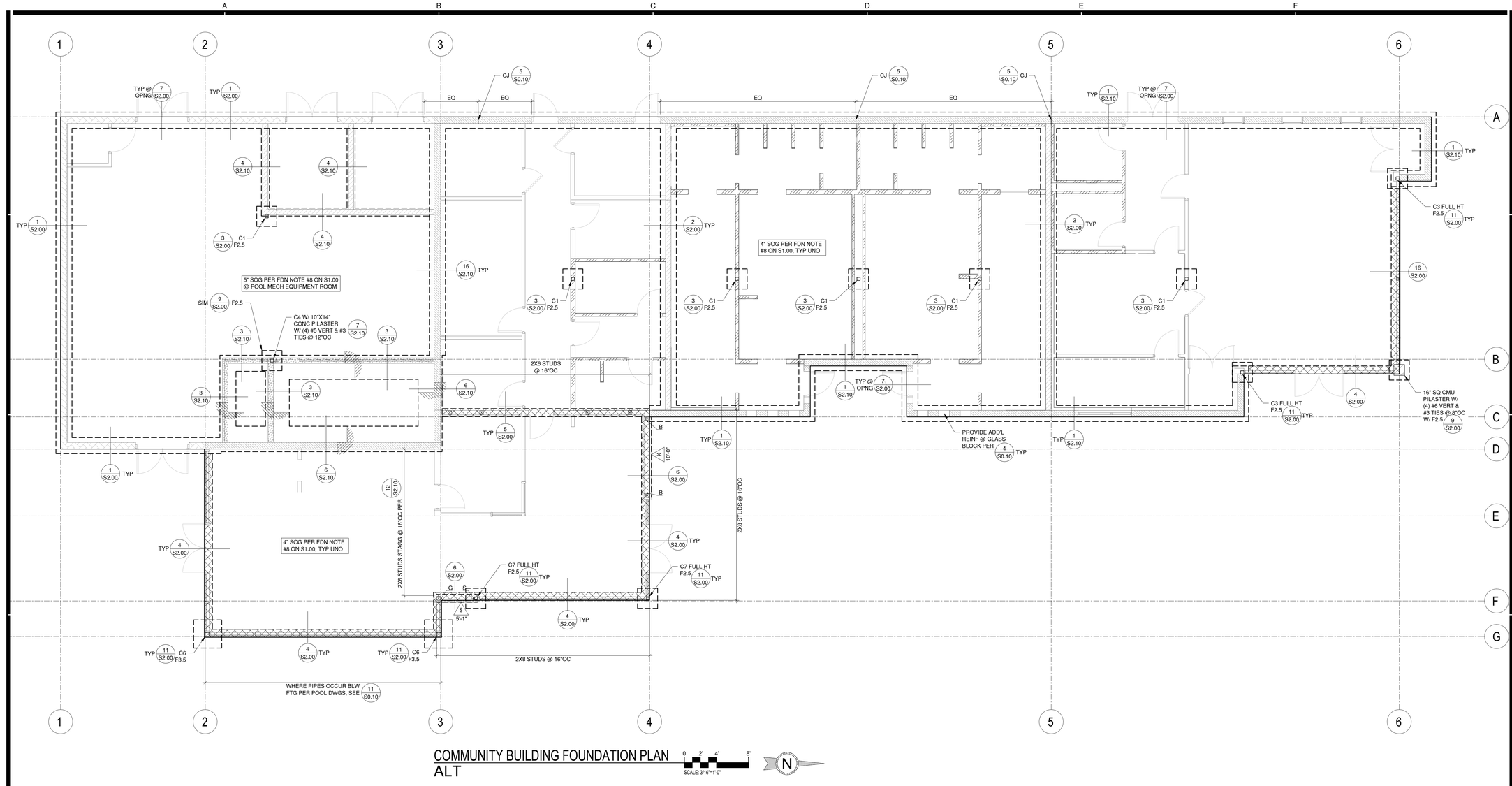

COMMUNITY BUILDING FOUNDATION PLAN
ALT

SCALE: 3/16"=1'-0"

FOOTING SCHEDULE (3000 PSF ALLOW. BRNG.)			
MARK	FOOTING SIZE	THICKNESS	REINFORCEMENT
F2.5	2'-6" X 2'-6"	1'-0"	(3) #5 EW
F3.5	3'-6" X 3'-6"	1'-0"	(4) #5 EW T&B
F4.0	4'-0" X 4'-0"	1'-0"	(5) #5 EW T&B
F7 X 10	7'-0" X 10'-0"	1'-6"	#6 @ 12"OC EW T&B

NOTE: EW = EACH WAY T&B = TOP & BOTTOM

STEEL COLUMN SCHEDULE				
MARK	COLUMN SIZE	BASE PLATE SIZE	ANCHOR BOLTS	BOLT LAYOUT
C1	HSS 4 X 4 X ¼	10" SQ X ⅜" THK	(4) ¾"Ø X 9" EMB	A
C2	HSS 6 X 6 X ¼	12" SQ X ⅜" THK	(4) ¾"Ø X 24" EMB	A
C3	HSS 6 X 6 X ¼	6½" X 12½" X ¾" THK	(2) ¾"Ø X 9" EMB	H
C4	HSS 4 X 4 X ¼	5" X 10" X ¾" THK	(2) ¾"Ø X 18" EMB	G
C5	HSS 12 X 8 X ⅝	18 X 14 X 1" THK (GR 50)	(4) 1⅛"Ø(ASTM F1554, GRADE 105) X 36" EMB	A
C6	HSS 6 X 6 X ¼	12"SQ X ¾" THK	(4) ¾"Ø X 9" EMB	A
C7	HSS 4½ X 4½ X ¼	10½"SQ X ¾" THK	(4) ¾"Ø X 9" EMB	A

NOTES:
AT BASE PLATES W/ < (4) AB'S ADD TEMP BRACING FOR LATERAL STABILITY IN (2) DIRECTIONS.

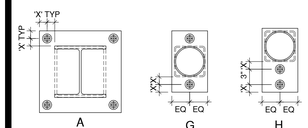

'X' = 1½" FOR AB ≤ ⅞"Ø
1¾ x Ø FOR AB > ⅞"Ø
TYP UNO

SHEAR WALL SCHEDULE									
MARK	ALLOW SHEAR	STUD OR BLKG AT ADJOINING PANEL EDGES	PERIODIC SPEC INSP PER 1705.11.2	APA RATED OSB	(EN) EDGE NAILING	(FN) FIELD NAILING	MUDSILL ANCHORS		'A35' OR 'LTP4' WHERE "PER SCHED" NOTED ON DET
							2X MUDSILL	3X MUDSILL	
K	280 #/'	2x	NO	15/32" STR 1	8d @ 6"OC	12"OC	⅝"Ø @ 4'-0"	⅝"Ø @ 4'-0"	19"OC MAX
S	1600 #/'	3x	YES	15/32" STR 1 BOTH SIDES	10d @ 2"OC BOTH SIDES	8"OC	N/A	⅝"Ø @ 1'-1"	6"O.C. MAX BOTH SIDES

NOTES:
1) 3x SILL PL ONLY OCCURS AT FOUNDATIONS AND STRUCTURAL SLABS, AND **NOT** ON UPPER FLOORS.
2) FOR INFO NOT SHOWN SEE DETAIL
11 S0.20

HOLDOWN SCHEDULE									
MARK	ALLOW. LOAD	ICC ESR #	COLA ALLOW. LOAD	LARR #	MIN. WOOD MEMBER THICKNESS	HOLDOWN	POST FASTENERS	FDN. BOLT	DETAIL @ SLAB ON GRADE
B	4565 lb.	2330, 2611	3423 lb.	25720, 25827	4X	SIMPSON HDU4-SDS2.5	(10) SDS ¼" X 2½" SCREWS	SSTB20/ SB⅝X24	1 S0.40
G	14390 lb.	2330	10793 lb.	25720	4X8 or 6X6 MIN.	SIMPSON HDU14-SDS 2.5	(36) SDS ¼" X 2½" SCREWS	1"Ø A.T.R.	3 S0.40
S	N/A	N/A	N/A	N/A	4X NAILER	STL. COL. PER PLAN	N/A	N/A	4 S0.40

NOTES:
1) MAXIMUM HOLDOWN SYSTEM DEFLECTION PER FLOOR SHALL BE .2" TYP UNO.
2) WHEN ALTERNATIVE CONTINUOUS ROD SYSTEMS ARE USED TO RESIST LIGHT-FRAME SHEAR WALL OVERTURNING FORCES, CALCULATIONS MUST BE SUBMITTED TO THE CODE OFFICIAL CONFIRMING THAT THE TOTAL VERTICAL DISPLACEMENT, WHICH WOULD INCLUDE STEEL ROD ELONGATION AND THE SHRINKAGE COMPENSATING DEVICE DEFLECTION, IS LESS THAN OR EQUAL TO 0.200 INCH (5 mm) FOR EACH STORY, OR BETWEEN RESTRAINTS, WHICHEVER IS MORE RESTRICTIVE. USING ALLOWABLE STRESS DESIGN (ASD). SHEAR WALL DRIFT LIMIT CALCULATIONS MUST CONSIDER THE 0.200 INCH VERTICAL DISPLACEMENT LIMIT.
3) HOLDOWN CONNECTION BOLTS AND NUTS SHALL BE TORQUED ⅔ TURN BEYOND FINGER TIGHT OR AS REQUIRED BY THE MANUF. (INSPECTOR SHALL VERIFY BY RANDOM INSPECTION PRIOR TO COVERING THE WALLS).
4) ALL HOLDOWNS ANCHOR BOLTS SHALL BE TIED IN PLACE PRIOR TO POURING CONCRETE.
5) A.T.R. INDICATES ALL THREADED ROD.

FOUNDATION NOTES:

1. SEE FOUNDATION NOTES ON SHEET S0.01 FOR DESIGN SOIL BEARING PRESSURE, ETC.
2. C1 -INDICATES COLUMN MARK, FOR SIZE SEE SCHEDULE SHEET S1.00.
   F1 -INDICATES FOOTING MARK, FOR SIZE SEE SCHEDULE SHEET S1.00.
3. K INDICATES SHEAR WALL MARK, SEE SCHEDULE SHEET S1.00.
4. A INDICATES A HOLDOWN MARK, SEE SCHEDULE SHEET S1.00.
5. SEE ARCH. FOR ALL DIMENSIONS & CONDITIONS NOT SHOWN.
6. PRIOR TO THE CONTRACTOR REQUESTING A BUILDING DEPT FOUNDATION INSPECTION, THE SOILS ENGINEER SHALL ADVISE THE BUILDING OFFICIAL IN WRITING THAT:
   A. THE BUILDING PAD WAS PREPARED IN ACCORDANCE WITH THE SOILS REPORT.
   B. THE UTILITY TRENCHES HAVE BEEN PROPERLY BACK FILLED & COMPACTED.
   C. THE FOUNDATION EXCAVATIONS COMPLY WITH THE INTENT OF THE SOILS REPORT.
7. ALL HOLDOWNS AND ANCHOR BOLTS AT SHEARWALL SHALL BE SET IN PLACE BY TEMPLATE PRIOR TO FOUNDATIONS INSPECTION AND RETIGHTENED PRIOR TO COVERING OF WALLS.
8. TYPICAL CONCRETE SLAB ON GRADE SHALL BE 4" THICK WITH #4 @ 18"OC EA WAY MID HT OVER 4" OF SAND W/ 10MIL VISQUEEN VAPOR BARRIER MID HT SLAB ON GRADE. IN AREAS WITH VEHICLE, OR HEAVY STORAGE LOADS SHALL BE 5" THICK W/ #4 @ 18"OC EA. WAY MID HT. THE MAXIMUM SPACING OF THE CONTROL JOINTS SHALL BE 30X THE SLAB THICKNESS BEFORE 7 DAYS OF CURING. SEE SOILS REPORT FOR SPECIAL SLAB REQUIREMENTS.
9. ALL FOOTINGS ARE CENTERED UNDER COLUMNS AND BEARING WALLS UNLESS NOTED OTHERWISE ON PLANS AND DETAILS.
10. SEE ARCHITECTURAL PLANS FOR LOCATIONS OF ALL WALL OPENINGS, SLOPED AND DEPRESSED SLABS, CONCRETE CURBS, ADDITIONAL EMBEDDED ITEMS NOT SHOWN ON THESE DRAWINGS. VERIFY ALL BUILDING DIMENSIONS, SLOPES AND DEPRESSED SLAB DIMENSIONS WITH ARCHITECTURAL PLANS BEFORE BEGINNING WORK. REPORT ANY DISCREPANCIES TO THE ARCHITECT FOR RESOLUTION.
11. SEE GENERAL NOTES AND SPECIFICATIONS FOR SPECIAL GRADING REQUIREMENTS UNDER FOOTINGS.
12. COLUMNS ARE ONE SIZE FROM FOUNDATION TO ROOF UNLESS OTHERWISE NOTED ON PLANS
13. ALL DIMENSIONS SHOWN ARE TO EDGE OF CONCRETE SLAB, CENTER OF INTERIOR WALL, OR CENTERLINE OF POST OR COLUMN. REFER TO ARCHITECTURAL PLANS FOR OTHER DIMENSIONS.
14. ALL COLUMNS ARE CENTERED ON THE GRID LINES UNLESS NOTED OTHERWISE.
15. ALL CONCRETE FLOORS TO BE FLAT UNO.
16. SURFACE WATER SHALL DRAIN AWAY FROM THE BUILDING. COORDINATE WITH CIVIL & LANDSCAPE.
17. CONTRACTOR SHALL COORDINATE ALL UNDERGROUND UTILITY WORK TO AVOID CONFLICTS WITH FOOTINGS.
18. CONTRACTOR SHALL SUBMIT PROPOSED FIRE RISER, CONDUIT, PIPING SLEEVE LOCATION FOR ENGINEER'S REVIEW PRIOR TO FOOTING CONSTRUCTION.
19. SEE ARCH'L AND CIVIL DRAWINGS FOR LOCATION OF MOISTURE BARRIER, CURBS, TRASH ENCLOSURES, EXTERIOR SLABS, DRAINAGE, RAMPS, WALKS, ETC.
20. FOR FOOTINGS OUTSIDE THE BUILDING ENVELOPE, COORDINATE TOP OF FOOTING ELEVATION WITH THE STRUCTURAL DETAILS AND WITH CIVIL AND LANDSCAPE.
21. BUILDING SLAB IS NOT DESIGNED TO SUPPORT CRANE LOADS, CONCRETE MIXING TRUCKS, OR OTHER SPECIFIC CONSTRUCTION LOADING. IF SUCH LOADS OCCUR, THE CONTRACTOR SHALL BE RESPONSIBLE FOR UPGRADING THE SLAB THICKNESS AND PROVIDING REINFORCING AS REQUIRED. ANY DAMAGE CAUSED TO THE SLAB SHALL BE REPAIRED AT THE CONTRACTOR'S EXPENSE PER THE OWNER'S REQUEST.
22. EXCAVATIONS SHALL BE MADE IN COMPLIANCE WITH CAL/OSHA REGULATIONS.

LEGEND:

- 8" CMU WALL W/ #5 VERT @ 16"OC & #5 HORIZ @ 16"OC
- 10" CMU WALL W/ #5 VERT @ 16"OC EF & #5 @ 16"OC HORIZ EF
- CANTILEVER CMU WALL W/ FTG PER 10 S2.00
- 10" PRE-INSULATED (HI-R-H) CMU WALL W/ #5 VERT @ 16"OC @ CENTERLINE OF GROUT & #5 HORIZ @ 16"OC (REFER TO MANUF REQUIREMENTS & RECOMMENDATIONS)
- CONC RETAINING WALL PER 3 S2.10
- WOOD STUD WALL PER FRAMING NOTE #2 & #3 ON S1.10 UNO
- WOOD STUD WALL W/ CURB PER ARCH & 9B S0.10
- 24" WIDE X 12" THK CONT FTG X 18" DP BLW LOWEST ADJACENT GRADE W/ (4) #4 T&B, (8) TOTAL
- 12" WIDE CONT FTG X 18" DP BLW LOWEST ADJACENT GRADE W/ (2) #4 T&B, (4) TOTAL

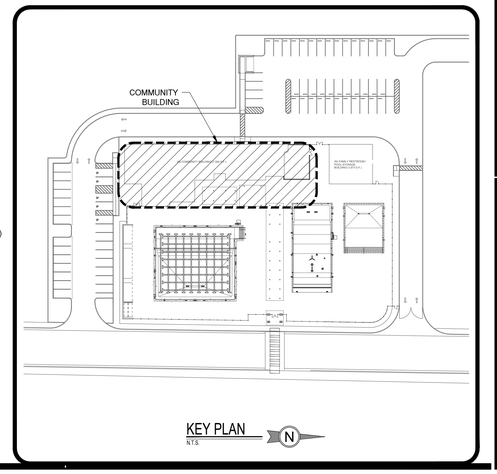

AGENCY

PTN_____ APPL_____

FLEWELLING & MOODY
architecture planning interiors

HEADQUARTERS OFFICE:
99 South Lake Avenue, Suite 300
Pasadena, CA 91101
Phone: 323.543.8300
E-Mail: fm-pasadena@flewelling-moody.com

ANTELOPE VALLEY OFFICE:
1035 West Lancaster Boulevard
Lancaster, California 93534
Phone: 661.949.0771
E-Mail: fm-lancaster@flewelling-moody.com

An Employee Owned Corporation

ARCHITECT

CONSULTANT

REGISTERED PROFESSIONAL ENGINEER JEFFREY SCOTT KNUDSEN No.64822 STRUCTURAL STATE OF CALIFORNIA

RGSE inc.
Structural Engineers
2720 Cochran St. Suite 8B
Simi Valley, CA 93065
P: 805.522.3379
www.rgseinc.com
info@rgseinc.com

Drawn by aaronc@rgseinc.com
Checked by sokheanc@rgseinc.com

Revisions

No.	Date	Description
1	08/27/2025	BID ALT

All dimensions must be checked at the job by the contractor who accepts full responsibility for their accuracy under the contract. These plans & the specifications in connection therewith have been prepared for a specific site. Any and all responsibility for their use in whole or in part on any other site is hereby disclaimed by Flewelling & Moody.

CITY OF RIDGECREST

SGT. JOHN PINNEY MEMORIAL POOL
REPLACEMENT PROJECT

205 S WARNER ST, RIDGECREST,CA 93555

ALTERNATE
COMMUNITY BUILDING
FOUNDATION PLAN

Job No. 23195

Date 04-18-2025

S1.00A5

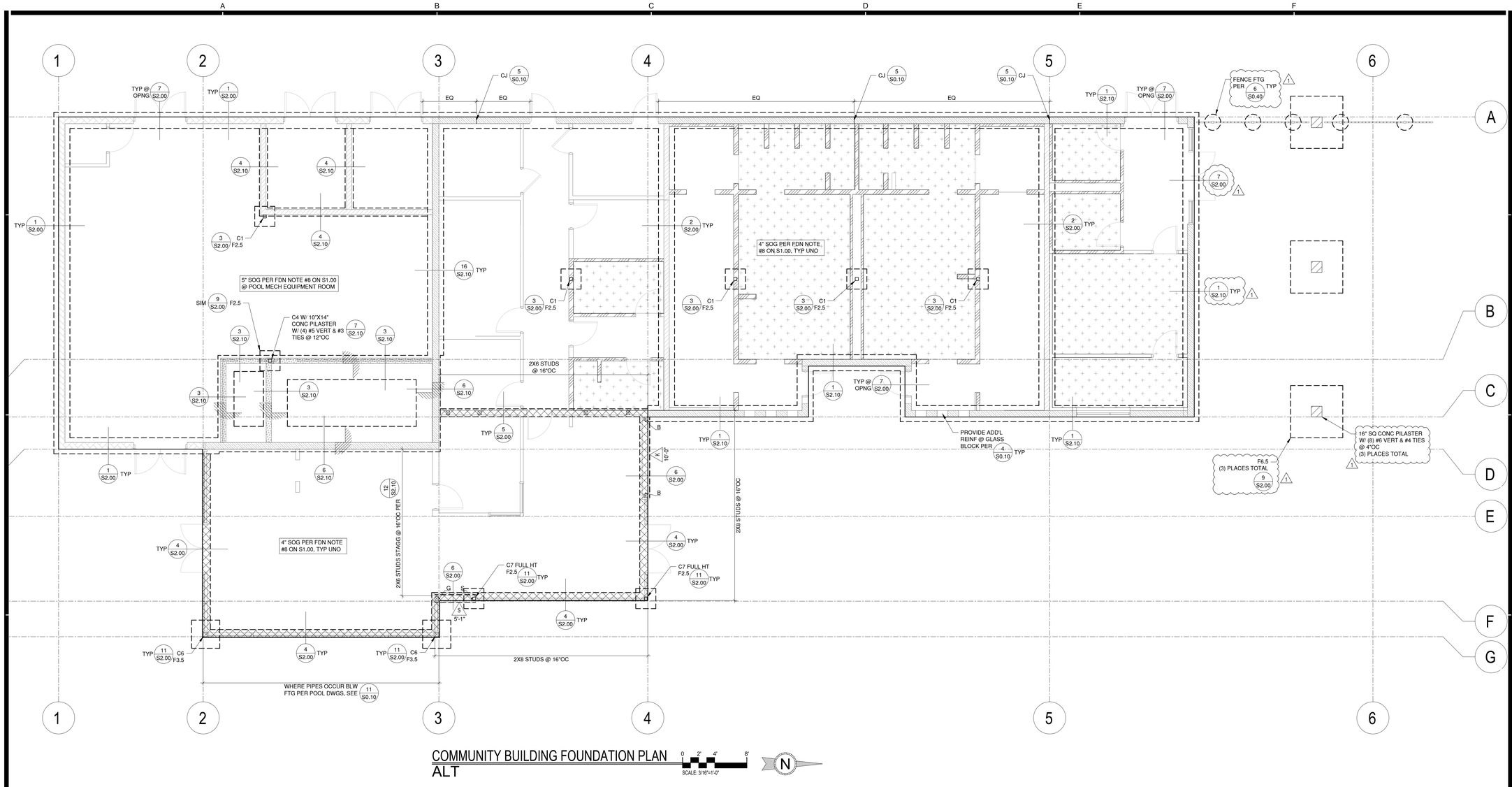

COMMUNITY BUILDING FOUNDATION PLAN ALT

SCALE: 3/16"=1'-0"

FOOTING SCHEDULE (3000 PSF ALLOW. BRNG.)			
MARK	FOOTING SIZE	THICKNESS	REINFORCEMENT
F2.5	2'-6" X 2'-6"	1'-0"	(3) #5 EW
F3.5	3'-6" X 3'-6"	1'-0"	(4) #5 EW T&B
F4.0	4'-0" X 4'-0"	1'-0"	(5) #5 EW T&B
F6.5	6'-6" X 6'-6"	2'-0"	(8) #6 T&B EW
F7 X 10	7'-0" X 10'-0"	1'-6"	#6 @ 12"OC EW T&B

NOTE: EW = EACH WAY T&B = TOP & BOTTOM

STEEL COLUMN SCHEDULE				
MARK	COLUMN SIZE	BASE PLATE SIZE	ANCHOR BOLTS	BOLT LAYOUT
C1	HSS 4 X 4 X ¼	10" SQ X ¾" THK	(4) ¾"Ø X 9" EMB	A
C2	HSS 6 X 6 X ¼	12" SQ X ¾" THK	(4) ¾"Ø X 24" EMB	A
C3	HSS 6 X 6 X ½	6½" X 12½" X ¾" THK	(2) ¾"Ø X 9" EMB	H
C4	HSS 4 X 4 X ¼	5" X 10" X ¾" THK	(2) ¾"Ø X 18" EMB	G
C5	HSS 12 X 8 X ⅝	18 X 14 X 1" THK (GR 50)	(4) 1⅛"Ø(ASTM F1554, GRADE 105) X 36" EMB	A
C6	HSS 6 X 6 X ¼	12"SQ X ¾" THK	(4) ¾"Ø X 9" EMB	A
C7	HSS 4½ X 4½ X ¼	10½"SQ X ¾" THK	(4) ¾"Ø X 9" EMB	A

NOTES:
AT BASE PLATES W/ < (4) AB'S ADD TEMP BRACING FOR LATERAL STABILITY IN (2) DIRECTIONS.

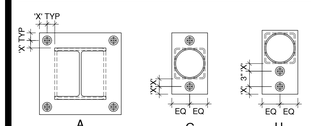

'X' = 1½" FOR AB ≤ ⅞"Ø
1¾ x Ø FOR AB > ⅞"Ø
TYP UNO

SHEAR WALL SCHEDULE									
MARK	ALLOW SHEAR	STUD OR BLKG AT ADJOINING PANEL EDGES	PERIODIC SPEC INSP PER 1705.11.2	APA RATED OSB	(EN) EDGE NAILING	(FN) FIELD NAILING	MUDSILL ANCHORS		'A35' OR 'LTP4' WHERE "PER SCHED" NOTED ON DET
							2X MUDSILL	3X MUDSILL[1]	
K	280 #/'	2x	NO	15/32" STR 1	8d @ 6"OC	12"OC	⅝"Ø @ 4'-0"	⅝"Ø @ 4'-0"	19"OC MAX
S	1600 #/'	3x	YES	15/32" STR 1 BOTH SIDES	10d @ 2"OC BOTH SIDES	8"OC	N/A	⅝"Ø @ 1'-1"	6"O.C. MAX BOTH SIDES

NOTES:
1) 3x SILL PL ONLY OCCURS AT FOUNDATIONS AND STRUCTURAL SLABS, AND **NOT** ON UPPER FLOORS.
2) FOR INFO NOT SHOWN SEE DETAIL 11 S0.20

HOLDOWN SCHEDULE									
MARK	ALLOW. LOAD	ICC ESR #	COLA ALLOW. LOAD	LARR #	MIN. WOOD MEMBER THICKNESS	HOLDOWN	POST FASTENERS	FDN. BOLT	DETAIL @ SLAB ON GRADE
B	4565 lb.	2330, 2611	3423 lb.	25720, 25827	4X	SIMPSON HDU4-SDS2.5	(10) SDS ¼" X 2½" SCREWS	SSTB20/ SB⅝X24	1 S0.40
G	14390 lb.	2330	10793 lb.	25720	4X8 or 6X6 MIN.	SIMPSON HDU14-SDS 2.5	(36) SDS ¼" X 2½" SCREWS	1"Ø A.T.R.	3 S0.40
S	N/A	N/A	N/A	N/A	4X NAILER	STL. COL. PER PLAN	N/A	N/A	4 S0.40

NOTES:
1) MAXIMUM HOLDOWN SYSTEM DEFLECTION PER FLOOR SHALL BE .2" TYP UNO.
2) WHEN ALTERNATIVE CONTINUOUS ROD SYSTEMS ARE USED TO RESIST LIGHT-FRAME SHEAR WALL OVERTURNING FORCES, CALCULATIONS MUST BE SUBMITTED TO THE CODE OFFICIAL CONFIRMING THAT THE TOTAL VERTICAL DISPLACEMENT, WHICH WOULD INCLUDE STEEL ROD ELONGATION AND THE SHRINKAGE COMPENSATING DEVICE DEFLECTION, IS LESS THAN OR EQUAL TO 0.200 INCH (5 mm) FOR EACH STORY, OR BETWEEN RESTRAINTS, WHICHEVER IS MORE RESTRICTIVE, USING ALLOWABLE STRESS DESIGN (ASD). SHEAR WALL DRIFT LIMIT CALCULATIONS MUST CONSIDER THE 0.200 INCH VERTICAL DISPLACEMENT LIMIT.
3) HOLDOWN CONNECTION BOLTS AND NUTS SHALL BE TORQUED ⅓ TURN BEYOND FINGER TIGHT OR AS REQUIRED BY THE MANUF. (INSPECTOR SHALL VERIFY BY RANDOM INSPECTION PRIOR TO COVERING THE WALLS).
4) ALL HOLDOWNS ANCHOR BOLTS SHALL BE TIED IN PLACE PRIOR TO POURING CONCRETE.
5) A.T.R. INDICATES ALL THREADED ROD.

FOUNDATION NOTES:

1. SEE FOUNDATION NOTES ON SHEET S0.01 FOR DESIGN SOIL BEARING PRESSURE, ETC.
2. C1 -INDICATES COLUMN MARK, FOR SIZE SEE SCHEDULE SHEET S1.00. F1 -INDICATES FOOTING MARK, FOR SIZE SEE SCHEDULE SHEET S1.00.
3. K INDICATES SHEAR WALL MARK, SEE SCHEDULE SHEET S1.00.
4. A INDICATES A HOLDOWN MARK, SEE SCHEDULE SHEET S1.00.
5. SEE ARCH. FOR ALL DIMENSIONS & CONDITIONS NOT SHOWN.
6. PRIOR TO THE CONTRACTOR REQUESTING A BUILDING DEPT FOUNDATION INSPECTION, THE SOILS ENGINEER SHALL ADVISE THE BUILDING OFFICIAL IN WRITING THAT:
   A. THE BUILDING PAD WAS PREPARED IN ACCORDANCE WITH THE SOILS REPORT.
   B. THE UTILITY TRENCHES HAVE BEEN PROPERLY BACK FILLED & COMPACTED.
   C. THE FOUNDATION EXCAVATIONS COMPLY WITH THE INTENT OF THE SOILS REPORT.
7. ALL HOLDOWNS AND ANCHOR BOLTS AT SHEARWALL SHALL BE SET IN PLACE BY TEMPLATE PRIOR TO FOUNDATIONS INSPECTION AND RETIGHTENED PRIOR TO COVERING OF WALLS.
8. TYPICAL CONCRETE SLAB ON GRADE SHALL BE 4" THICK WITH #4 @ 18"OC EA WAY MID HT OVER 4" OF SAND W/ 10MIL VISQUEEN VAPOR BARRIER MID HT SLAB ON GRADE. IN AREAS WITH VEHICLE, OR HEAVY STORAGE LOADS SHALL BE 5" THICK W/ #4 @ 18"OC EA. WAY MID HT. THE MAXIMUM SPACING OF THE CONTROL JOINTS SHALL BE 30X THE SLAB THICKNESS BEFORE 7 DAYS OF CURING. SEE SOILS REPORT FOR SPECIAL SLAB REQUIREMENTS.
9. ALL FOOTINGS ARE CENTERED UNDER COLUMNS AND BEARING WALLS UNLESS NOTED OTHERWISE ON PLANS AND DETAILS.
10. SEE ARCHITECTURAL PLANS FOR LOCATIONS OF ALL WALL OPENINGS, SLOPED AND DEPRESSED SLABS, CONCRETE CURBS, ADDITIONAL EMBEDDED ITEMS NOT SHOWN ON THESE DRAWINGS. VERIFY ALL BUILDING DIMENSIONS, SLOPES AND DEPRESSED SLAB DIMENSIONS WITH ARCHITECTURAL PLANS BEFORE BEGINNING WORK. REPORT ANY DISCREPANCIES TO THE ARCHITECT FOR RESOLUTION.
11. SEE GENERAL NOTES AND SPECIFICATIONS FOR SPECIAL GRADING REQUIREMENTS UNDER FOOTINGS.
12. COLUMNS ARE ONE SIZE FROM FOUNDATION TO ROOF UNLESS OTHERWISE NOTED ON PLANS
13. ALL DIMENSIONS SHOWN ARE TO EDGE OF CONCRETE SLAB, CENTER OF INTERIOR WALL, OR CENTERLINE OF POST OR COLUMN. REFER TO ARCHITECTURAL PLANS FOR OTHER DIMENSIONS.
14. ALL COLUMNS ARE CENTERED ON THE GRID LINES UNLESS NOTED OTHERWISE.
15. ALL CONCRETE FLOORS TO BE FLAT UNO.
16. SURFACE WATER SHALL DRAIN AWAY FROM THE BUILDING. COORDINATE WITH CIVIL & LANDSCAPE.
17. CONTRACTOR SHALL COORDINATE ALL UNDERGROUND UTILITY WORK TO AVOID CONFLICTS WITH FOOTINGS.
18. CONTRACTOR SHALL SUBMIT PROPOSED FIRE RISER, CONDUIT, PIPING SLEEVE LOCATION FOR ENGINEER'S REVIEW PRIOR TO FOOTING CONSTRUCTION.
19. SEE ARCH'L AND CIVIL DRAWINGS FOR LOCATION OF MOISTURE BARRIER, CURBS, TRASH ENCLOSURES, EXTERIOR SLABS, DRAINAGE, RAMPS, WALKS, ETC.
20. FOR FOOTINGS OUTSIDE THE BUILDING ENVELOPE, COORDINATE TOP OF FOOTING ELEVATION WITH THE STRUCTURAL DETAILS AND WITH CIVIL AND LANDSCAPE.
21. BUILDING SLAB IS NOT DESIGNED TO SUPPORT CRANE LOADS. CONCRETE MIXING TRUCKS, OR OTHER SPECIFIC CONSTRUCTION LOADING. IF SUCH LOADS OCCUR, THE CONTRACTOR SHALL BE RESPONSIBLE FOR UPGRADING THE SLAB THICKNESS AND PROVIDING REINFORCING AS REQUIRED. ANY DAMAGE CAUSED TO THE SLAB SHALL BE REPAIRED AT THE CONTRACTOR'S EXPENSE PER THE OWNER'S REQUEST.
22. EXCAVATIONS SHALL BE MADE IN COMPLIANCE WITH CAL/OSHA REGULATIONS.

LEGEND:

- 8" CMU WALL W/ #5 VERT @ 16"OC & #5 HORIZ @ 16"OC
- 10" CMU WALL W/ #5 VERT @ 16"OC EF & #5 @ 16"OC HORIZ EF
- CANTILEVER CMU WALL W/ FTG PER 10 S2.00
- 10" PRE-INSULATED (HI-R-H) CMU WALL W/ #5 VERT @ 16"OC @ CENTERLINE OF GROUT & #5 HORIZ @ 16"OC (REFER TO MANUF REQUIREMENTS & RECOMMENDATIONS)
- CONC RETAINING WALL PER 3 S2.10
- WOOD STUD WALL PER FRAMING NOTE #2 & #3 ON S1.10 UNO
- WOOD STUD WALL W/ CURB PER ARCH & 9B S0.10
- 24" WIDE X 12" THK CONT FTG X 18" DP BLW LOWEST ADJACENT GRADE W/ (4) #4 T&B, (8) TOTAL
- 12" WIDE CONT FTG X 18" DP BLW LOWEST ADJACENT GRADE W/ (2) #4 T&B, (4) TOTAL
- AREA OF DEPRESSED SLAB PER ARCH & 15 S0.30

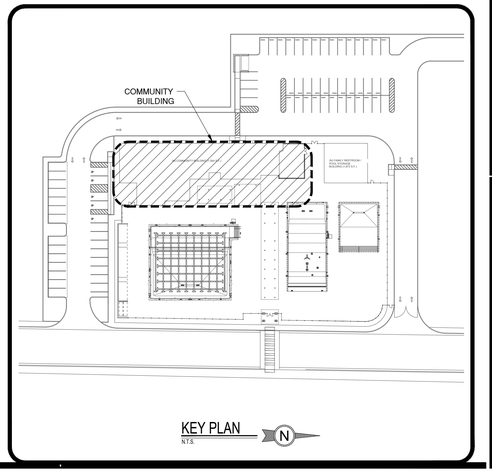

AGENCY

PTN_____ APPL_____

FLEWELLING & MOODY
architecture planning interiors

HEADQUARTERS OFFICE:
99 South Lake Avenue, Suite 300
Pasadena, CA 91101
Phone: 323.543.8300
E-Mail: fm-pasadena@flewelling-moody.com

ANTELOPE VALLEY OFFICE:
1035 West Lancaster Boulevard
Lancaster, California 93534
E-Mail: fm-lancaster@flewelling-moody.com

An Employee Owned Corporation

ARCHITECT

CONSULTANT

REGISTERED PROFESSIONAL ENGINEER JEFFREY SCOTT ANDERSON No.6432 STRUCTURAL STATE OF CALIFORNIA

RGSE inc.
Structural Engineers
2720 Cochran St. Suite 8B
Simi Valley, CA 93065
P: 805.522.3379
www.rgseinc.com
info@rgseinc.com

Drawn by aaronc@rgseinc.com
Checked by sokheanc@rgseinc.com

Revisions

No.	Date	Description
1	08/27/2025	BID ALT

All dimensions must be checked at the job by the contractor who accepts full responsibility for their accuracy under the contract. These plans & the specifications in connection therewith have been prepared for a specific site. Any and all responsibility for their use in whole or in part on any other site is hereby disclaimed by Flewelling & Moody.

CITY OF RIDGECREST

SGT. JOHN PINNEY MEMORIAL POOL REPLACEMENT PROJECT

205 S WARNER ST, RIDGECREST,CA 93555

ALTERNATE COMMUNITY BUILDING FOUNDATION PLAN

Job No. 23195

Date 04-18-2025

S1.00A6

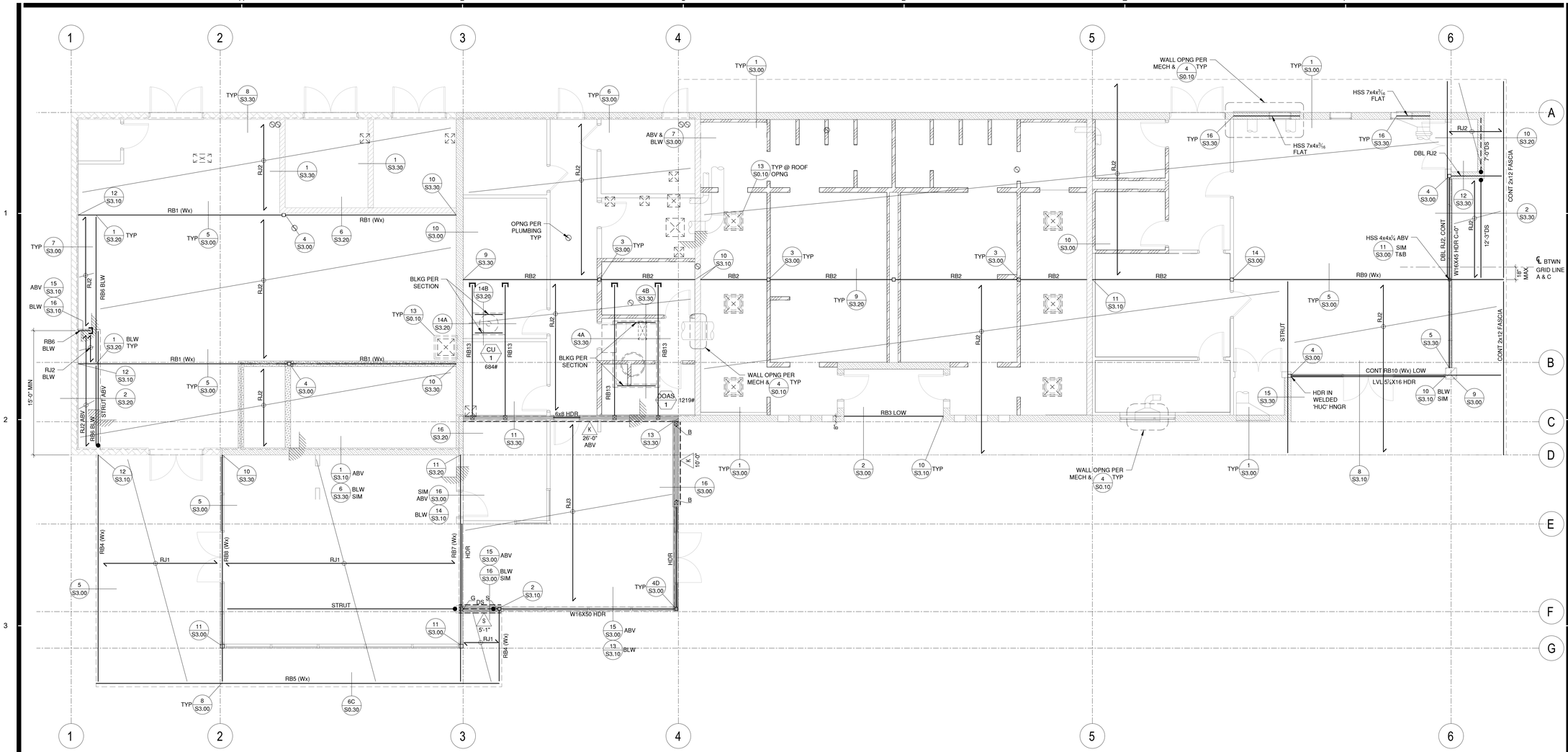

COMMUNITY BUILDING ROOF FRAMING PLAN

SCALE: 3/16"=1'-0"

NOTE:
SEE SHEET S1.00 FOR ALL OTHER SCHEDULES, TABLES, LEGENDS, AND PLAN NOTES NOT SHOWN ON THIS PLAN.

FRAMING SCHEDULE:

RJ1	=	18" TJI 360 @ 16"OC OR LVL 1¾ X 18 @ 16"OC
RJ2	=	2 X 12 @ 16"OC
RJ3	=	14" TJI 210 @ 16"OC
RJ4	=	16" TJI 560 @ 16"OC
RJ5	=	16" TJI 210 @ 16"OC
RJ6	=	7ZS2.25x105 (55ksi) @ 2'-8"OC MAX
RJ7	=	10ZS2.75x105 (55ksi) @ 2'-8"OC MAX
RB1	=	W10 X 45 C=0"
RB2	=	LVL 7 X 11¼
RB3	=	4 X 10
RB4	=	W18 X 35 C=0"
RB5	=	W18 X 97 C=0"
RB6	=	6 X 12
RB7	=	W18 X 35 C=0"
RB8	=	W18 X 35 C=0"
RB9	=	W10 X 54 C=0"
RB10	=	W12 X 14 C=0"
RB11	=	HSS 6 X 6 X ¼ C=0"
RB12	=	6 X 8
RB13	=	4 X 12
RB14	=	HSS 10 X 8 X 5/8
RB15	=	HSS 12 X 8 x 5/8

FRAMING NOTES:

1. PROVIDE 2X TRIMMER @ 7½ OR LESS HEADER (2) 2X TRIMMER @ 9½ OR GREATER & 4X POST TRIMMER @ LVL/GLB HEADER PER DETAIL 11/S0.20
2. ALL EXTERIOR WALLS TO BE 2x6 @ 16"OC STUDS UNO.
3. ALL INTERIOR WALLS TO BE 2x4 MIN @ 16"OC STUDS UNO.
4. ALL EXTERIOR WALLS SHALL BE 100% SHEATHED. EXTERIOR WALLS WITHOUT SHEAR WALL SYMBOL SHALL HAVE SHEATHING TYPE 'K' PER SHEAR WALL SCHEDULE UNO ON ARCHITECTURAL DRAWINGS.
5. FOR TYPICAL STUD WALL FRAMING SEE 11/S0.20
6. PROVIDE MULTIPLE STUDS UNDER MULTIPLE JOISTS.
7. "C" = INDICATES CAMBER BETWEEN SUPPORTS ONLY @ GLUED, LAMINATED BEAMS. (i.e. NO CAMBER @ CANTILEVERS)
8. PROVIDE TWO ROWS BOUNDARY NAILING ALONG ALL STRUT MEMBERS, INTERIOR SHEAR WALLS, AND INTERIOR LATERAL FRAMES UNO.
9. CONTRACTOR SHALL COORDINATE ALL MECH'L UNIT LOCATIONS, SIZES, OPENINGS, ETC, WITH MECH'L DRAWINGS.
10. SEE ARCH FOR ALL DIMENSIONS & CONDITIONS NOT SHOWN.
11. K INDICATES SHEAR WALL MARK FOR WALLS BELOW UNO, SEE SCHEDULE SHEET S1.00.
12. A INDICATES A HOLDOWN MARK FOR SHEAR WALLS FOR THE LEVEL BELOW UNO, SEE SCHEDULE SHEET S1.00.
13. TYPICAL ROOF SHEATHING SHALL BE 15/32" APA RATED SHEATHING, STURD-I-FLOOR, OR SINGLE FLOOR (EXPOSURE-1) (32/16) W/ 10d COMMON NAILS @ 6"OC BOUNDARIES, 6"OC OTHER PANEL EDGES, AND 12"OC FIELD NAILING. (UN-BLOCKED, T&G @ UNSUPPORTED PANEL EDGES OR WITH PANEL SHT'G CLIPS (ALLOW SHEAR 190 PLF))
14. UNLESS SPECIFICALLY NOTED ON THE PLANS, FRAMING SHALL NOT BE CUT OR RELOCATED WITHOUT PRIOR APPROVAL OF THE STRUCTURAL ENGINEER. CONTRACTOR SHALL OBTAIN APPROVAL OF JOIST MFR SHOP DRAWINGS FROM BOTH MECHANICAL AND STRUCTURAL ENGINEERS PRIOR TO ERECTION OF JOIST FRAMING.
15. ALL MULTIPLE JOISTS SHALL HAVE EACH JOIST NAILED TO THE ADJACENT ONE WITH 16d @ 16"OC STAGGERED.
16. ALL MULTIPLE STUDS SHALL HAVE EACH STUD NAILED TO THE ADJACENT ONE WITH SOLE PLATE NAILING PER SHEAR WALL SCHEDULE, 10d @ 9"OC STAGGERED MINIMUM.
17. FOR HEADER SIZES NOT NOTED, REFER TO TYPICAL DETAIL SCHEDULE.
18. LOW SPOTS CREATED BY THE ROOF PITCH SHALL BE PROVIDED WITH CRICKETS AS REQUIRED TO SLOPE.
19. BALLOON FRAME ALL GABLE END WALLS UNO.
20. ALL ARCHITECTURALLY EXPOSED STRUCTURAL STEEL (AESS) SHALL MEET THE MINIMUM SPECIFICATIONS IN THE AISC CODE OF STANDARD PRACTICE CHAPTER 10 UNLESS NOTED OTHERWISE ON THE ARCHITECTURAL DRAWINGS.
21. ⊠ 6X FOR 6X WALLS, 4X FOR 4X WALLS. WIDTH TO MATCH BEAM UNO.
22. WOOD TO WOOD, SAWN LUMBER USE 'HU' HANGER UNO. WOOD TO WOOD, PSL/LVL/LSL/GLB USE 'HGU' HANGER UNO. WOOD TO STEEL USE 'WPU' HANGER UNO.
23. POST W/ 'ECCQ' UNO.
24. POST W/ 'CCQ' UNO.
25. 5" MIN WIDE PSL, GLB, OR DBL 2X OR 4X DF STRUT UNO W/ CONNECTOR PER DETAIL 8/S0.30
26. DRAG STRUT W/ CONNECTOR PER DETAIL 8/S0.30 UNO.
27. POST IN WALL TO MATCH BM. WIDTH UNO PER DETAIL 14/S0.30
28. INDICATES WALLS REQUIRING TOP PLATE SPLICES PER DETAIL 2/S0.30

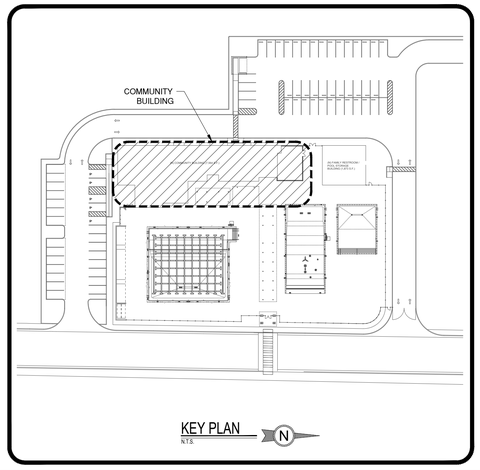

AGENCY

REVIEWED FOR CODE COMPLIANCE BY: WILLDAN ENGINEERING

Approval of these plans & specifications shall not be construed to be a permit for, or an approval of any violation of any Federal, State, County or City laws or ordinances. One set of approved plans must be kept on the job until completion.

10:04:47 AM Jul 21, 2025

PTN_____ APPL_____

FLEWELLING & MOODY
architecture planning interiors

HEADQUARTERS OFFICE:
99 South Lake Avenue, Suite 300
Pasadena, CA 91101
Phone: 323.543.8300
E-Mail: fm-pasadena@flewelling-moody.com

ANTELOPE VALLEY OFFICE:
1035 West Lancaster Boulevard
Lancaster, California 93534
Phone: 661.949.0771
E-Mail: fm-lancaster@flewelling-moody.com

An Employee Owned Corporation

ARCHITECT

CONSULTANT

REGISTERED PROFESSIONAL ENGINEER JEFFREY SCOTT LIMBERT No. 6422 STRUCTURAL STATE OF CALIFORNIA

RGSE inc.
Structural Engineers
2720 Cochran St. Suite 8B
Simi Valley, CA 93065
P: 805.522.3379
www.rgseinc.com
info@rgseinc.com

Drawn by aaronc@rgseinc.com

Checked by sokheanc@rgseinc.com

Revisions

No.	Date	Description

All dimensions must be checked at the job by the contractor who accepts full responsibility for their accuracy under the contract. These plans & the specifications in connection therewith have been prepared for a specific site. Any and all responsibility for their use in whole or in part on any other site is hereby disclaimed by Flewelling & Moody.

CITY OF RIDGECREST

SGT. JOHN PINNEY MEMORIAL POOL REPLACEMENT PROJECT

205 S WARNER ST, RIDGECREST,CA 93555

COMMUNITY BUILDING ROOF FRAMING PLAN

Job No. 3055-0100

Date 04-18-2025

S1.10

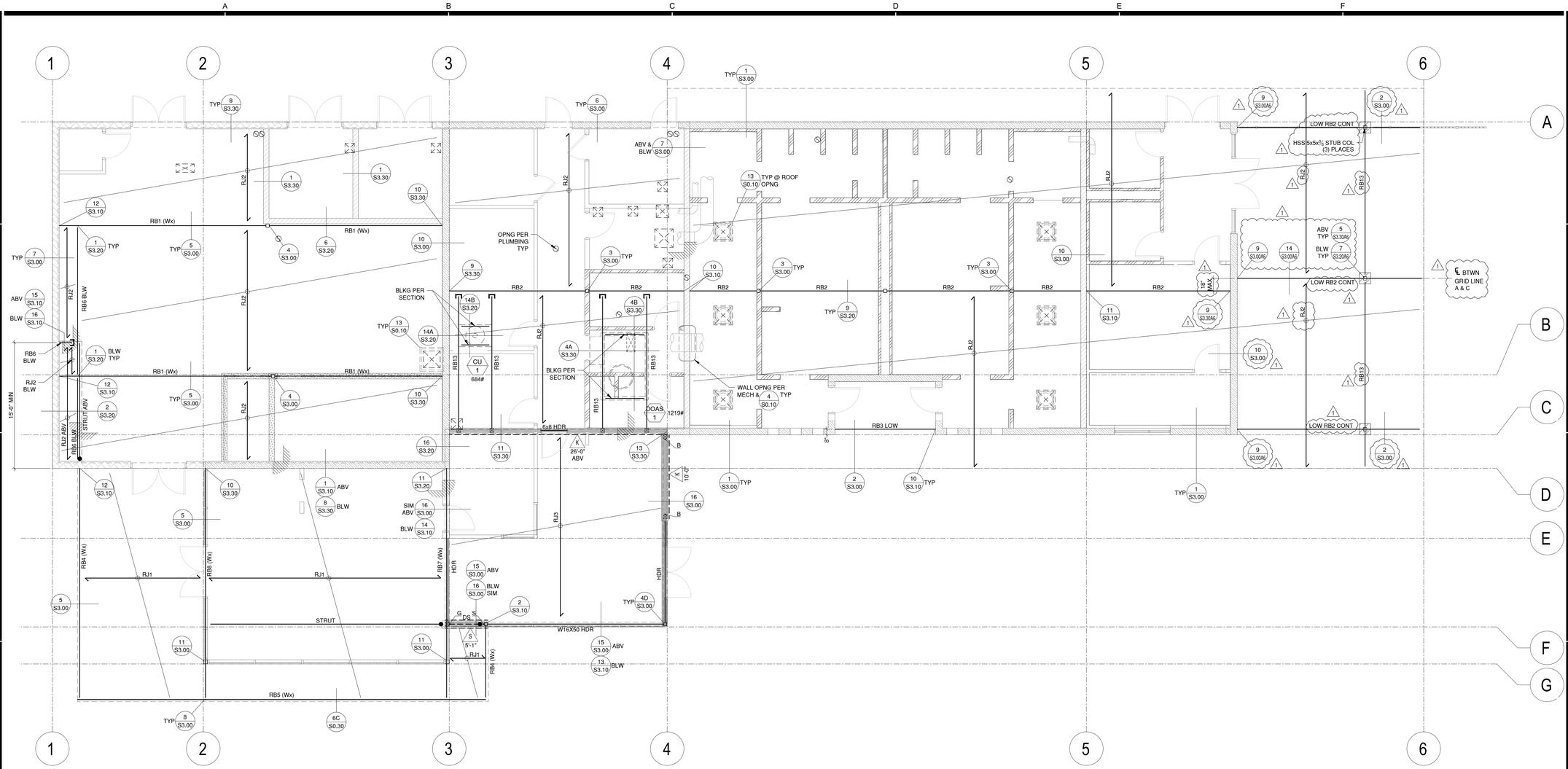

COMMUNITY BUILDING ROOF FRAMING PLAN
ALT

SCALE: 3/16"=1'-0"

NOTE:
SEE SHEET S1.00 FOR ALL OTHER SCHEDULES, TABLES, LEGENDS, AND PLAN NOTES NOT SHOWN ON THIS PLAN.

FRAMING SCHEDULE:

RJ1	=	18" TJI 360 @ 16"OC OR LVL 1¾ X 18 @ 16"OC
RJ2	=	2 X 12 @ 16"OC
RJ3	=	14" TJI 210 @ 16"OC
RJ4	=	16" TJI 560 @ 16"OC
RJ5	=	16" TJI 210 @ 16"OC
RJ6	=	7ZS2.25x105 (55ksi) @ 2'-8"OC MAX
RJ7	=	10ZS2.75x105 (55ksi) @ 2'-8"OC MAX
RB1	=	W10 X 45 C=0"
RB2	=	LVL 7 X 11¼
RB3	=	4 X 10
RB4	=	W18 X 35 C=0"
RB5	=	W18 X 97 C=0"
RB6	=	6 X 12
RB7	=	W18 X 35 C=0"
RB8	=	W18 X 35 C=0"
RB9	=	W10 X 54 C=0"
RB10	=	W12 X 14 C=0"
RB11	=	HSS 6 X 6 X ¼ C=0"
RB12	=	6 X 8
RB13	=	4 X 12
RB14	=	HSS 10 X 8 X 5/8
RB15	=	HSS 12 X 8 x 5/8

FRAMING NOTES:

1. PROVIDE 2X TRIMMER @ 7½ OR LESS HEADER (2) 2X TRIMMER @ 9½ OR GREATER & 4X POST TRIMMER @ LVL/GLB HEADER PER DETAIL 11/S0.20
2. ALL EXTERIOR WALLS TO BE 2x6 @ 16"OC STUDS UNO.
3. ALL INTERIOR WALLS TO BE 2x4 MIN @ 16"OC STUDS UNO.
4. ALL EXTERIOR WALLS SHALL BE 100% SHEATHED. EXTERIOR WALLS WITHOUT SHEAR WALL SYMBOL SHALL HAVE SHEATHING TYPE 'K' PER SHEAR WALL SCHEDULE UNO ON ARCHITECTURAL DRAWINGS.
5. FOR TYPICAL STUD WALL FRAMING SEE 11/S0.20
6. PROVIDE MULTIPLE STUDS UNDER MULTIPLE JOISTS.
7. "C" = INDICATES CAMBER BETWEEN SUPPORTS ONLY @ GLUED, LAMINATED BEAMS. (i.e. NO CAMBER @ CANTILEVERS)
8. PROVIDE TWO ROWS BOUNDARY NAILING ALONG ALL STRUT MEMBERS, INTERIOR SHEAR WALLS, AND INTERIOR LATERAL FRAMES UNO.
9. CONTRACTOR SHALL COORDINATE ALL MECH'L UNIT LOCATIONS, SIZES, OPENINGS, ETC, WITH MECH'L DRAWINGS.
10. SEE ARCH FOR ALL DIMENSIONS & CONDITIONS NOT SHOWN.
11. K INDICATES SHEAR WALL MARK FOR WALLS BELOW UNO, SEE SCHEDULE SHEET S1.00.
12. A INDICATES A HOLDOWN MARK FOR SHEAR WALLS FOR THE LEVEL BELOW UNO, SEE SCHEDULE SHEET S1.00.
13. TYPICAL ROOF SHEATHING SHALL BE 15/32" APA RATED SHEATHING, STURD-I-FLOOR, OR SINGLE FLOOR (EXPOSURE-1) (32/16) W/ 10d COMMON NAILS @ 6"OC BOUNDARIES, 6"OC OTHER PANEL EDGES, AND 12"OC FIELD NAILING. (UN-BLOCKED, T&G @ UNSUPPORTED PANEL EDGES OR WITH PANEL SHT'G CLIPS (ALLOW SHEAR 190 PLF))
14. UNLESS SPECIFICALLY NOTED ON THE PLANS, FRAMING SHALL NOT BE CUT OR RELOCATED WITHOUT PRIOR APPROVAL OF THE STRUCTURAL ENGINEER. CONTRACTOR SHALL OBTAIN APPROVAL OF JOIST MFR SHOP DRAWINGS FROM BOTH MECHANICAL AND STRUCTURAL ENGINEERS PRIOR TO ERECTION OF JOIST FRAMING.
15. ALL MULTIPLE JOISTS SHALL HAVE EACH JOIST NAILED TO THE ADJACENT ONE WITH 16d @ 16"OC STAGGERED.
16. ALL MULTIPLE STUDS SHALL HAVE EACH STUD NAILED TO THE ADJACENT ONE WITH SOLE PLATE NAILING PER SHEAR WALL SCHEDULE, 10d @ 9"OC STAGGERED MINIMUM.
17. FOR HEADER SIZES NOT NOTED, REFER TO TYPICAL DETAIL SCHEDULE.
18. LOW SPOTS CREATED BY THE ROOF PITCH SHALL BE PROVIDED WITH CRICKETS AS REQUIRED TO SLOPE.
19. BALLOON FRAME ALL GABLE END WALLS UNO.
20. ALL ARCHITECTURALLY EXPOSED STRUCTURAL STEEL (AESS) SHALL MEET THE MINIMUM SPECIFICATIONS IN THE AISC CODE OF STANDARD PRACTICE CHAPTER 10 UNLESS NOTED OTHERWISE ON THE ARCHITECTURAL DRAWINGS.
21. ☒ 6X FOR 6X WALLS, 4X FOR 4X WALLS. WIDTH TO MATCH BEAM UNO.
22. WOOD TO WOOD, SAWN LUMBER USE 'HU' HANGER UNO.
    WOOD TO WOOD, PSL/LVL/LSL/GLB USE 'HGU' HANGER UNO.
    WOOD TO STEEL USE 'WPU' HANGER UNO.
23. POST W/ 'ECCQ' UNO.
24. POST W/ 'CCQ' UNO.
25. STRUT 5" MIN WIDE PSL, GLB, OR DBL 2X OR 4X DF STRUT UNO W/ CONNECTOR PER DETAIL 8/S0.30
26. DS DRAG STRUT W/ CONNECTOR PER DETAIL 8/S0.30 UNO.
27. POST IN WALL TO MATCH BM. WIDTH UNO PER DETAIL 14/S0.30
28. INDICATES WALLS REQUIRING TOP PLATE SPLICES PER DETAIL 2/S0.30

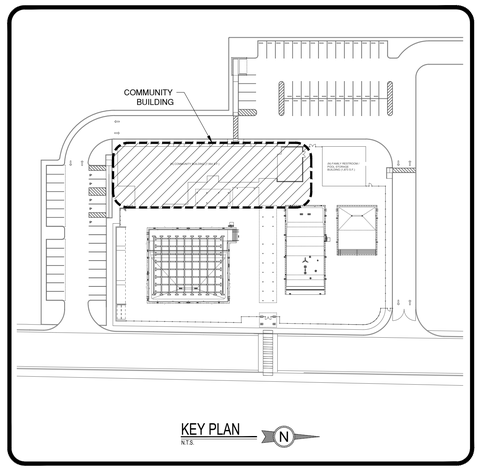

AGENCY

PTN_____ APPL_____

FLEWELLING & MOODY
architecture planning interiors

HEADQUARTERS OFFICE:
99 South Lake Avenue, Suite 300
Pasadena, CA 91101
Phone: 323.543.8300
E-Mail: fm-pasadena@flewelling-moody.com

ANTELOPE VALLEY OFFICE:
1035 West Lancaster Boulevard
Lancaster, California 93534
Phone: 661.949.0771
E-Mail: fm-lancaster@flewelling-moody.com

An Employee Owned Corporation

ARCHITECT

CONSULTANT

REGISTERED PROFESSIONAL ENGINEER JEFFREY SCOTT LUNDQUIST No.6437 STRUCTURAL STATE OF CALIFORNIA

RGSE inc.
Structural Engineers
2720 Cochran St. Suite 8B
Simi Valley, CA 93065
P: 805.522.3379
www.rgseinc.com
info@rgseinc.com

Drawn by aaronc@rgseinc.com
Checked by sokheanc@rgseinc.com

Revisions

No.	Date	Description
1	08/27/2025	BID ALT

All dimensions must be checked at the job by the contractor who accepts full responsibility for their accuracy under the contract. These plans & the specifications in connection therewith have been prepared for a specific site. Any and all responsibility for their use in whole or in part on any other site is hereby disclaimed by Flewelling & Moody.

CITY OF RIDGECREST

SGT. JOHN PINNEY MEMORIAL POOL
REPLACEMENT PROJECT

205 S WARNER ST, RIDGECREST,CA 93555

ALTERNATE
COMMUNITY BUILDING
ROOF FRAMING PLAN

Job No. 23195

Date 04-18-2025

S1.10A6

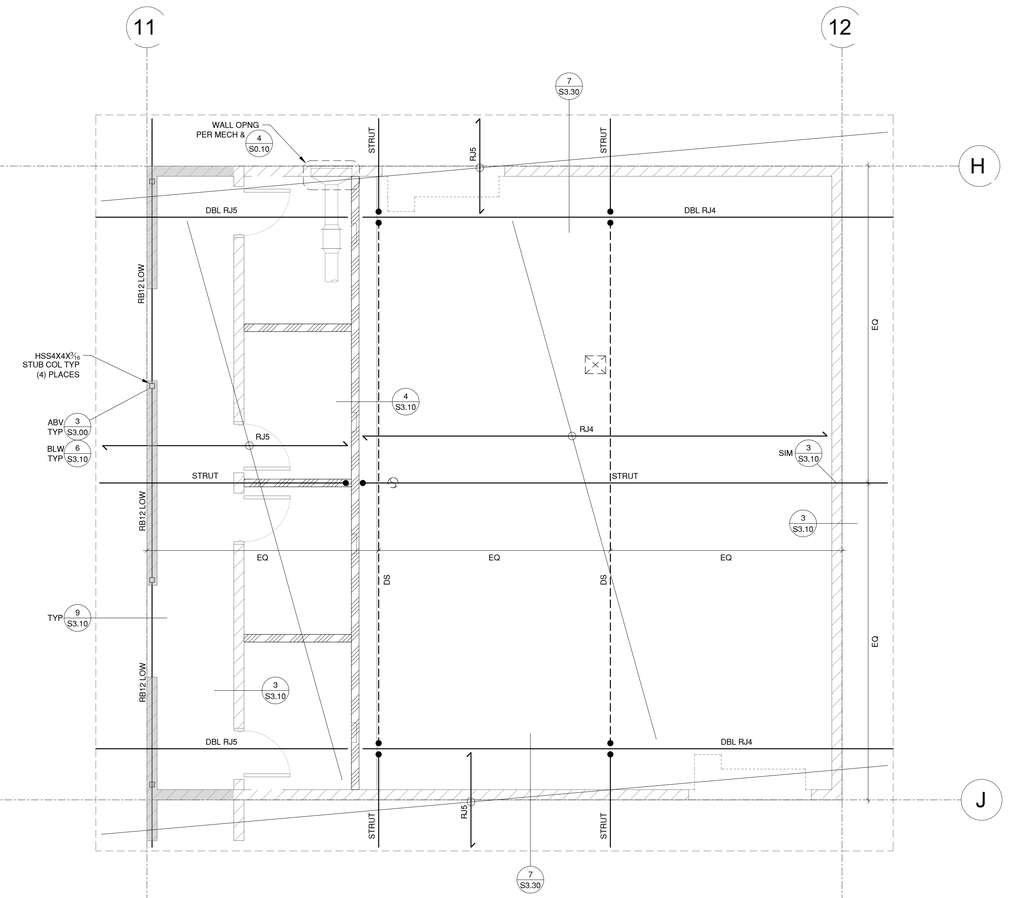

BATHROOMS/POOL STORAGE BLDG ROOF FRAMING PLAN

SCALE: 1/4"=1'-0"

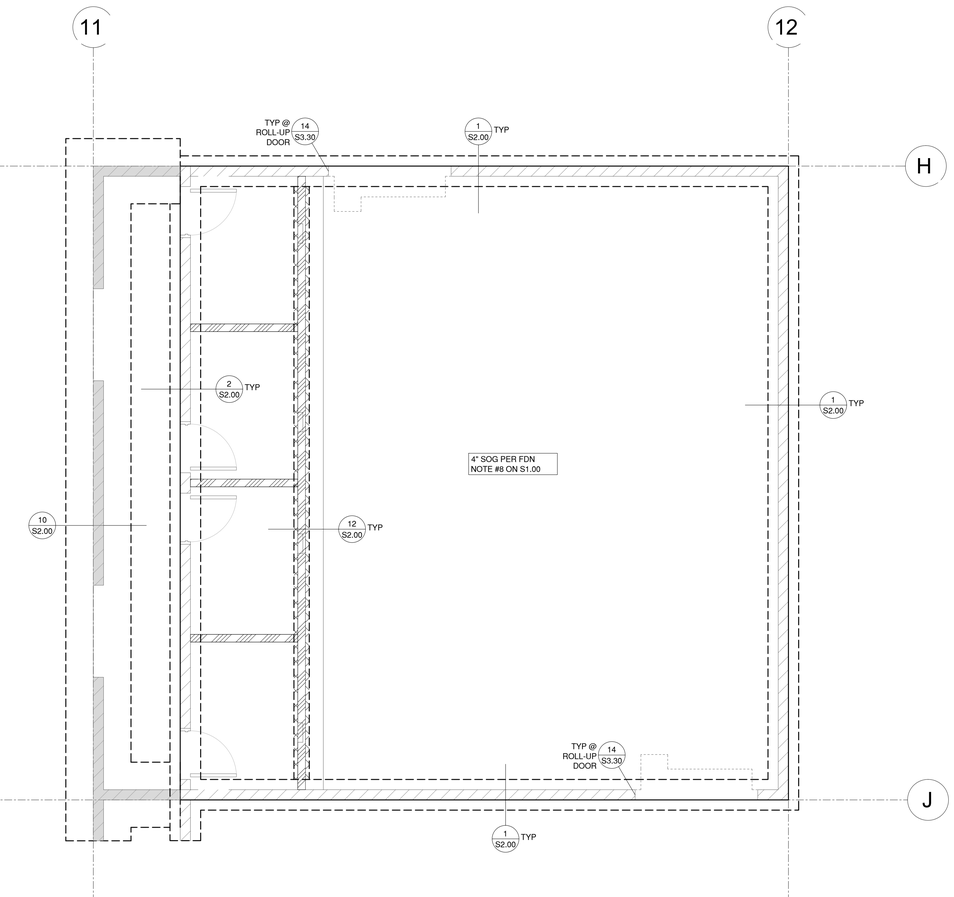

BATHROOMS/POOL STORAGE BLDG FOUNDATION PLAN

SCALE: 1/4"=1'-0"

FRAMING SCHEDULE:

RJ1	=	18" TJI 360 @ 16"OC OR LVL 1¾ X 18 @ 16"OC
RJ2	=	2 X 12 @ 16"OC
RJ3	=	14" TJI 210 @ 16"OC
RJ4	=	16" TJI 560 @ 16"OC
RJ5	=	16" TJI 210 @ 16"OC
RJ6	=	7ZS2.25x105 (55ksi) @ 2'-8"OC MAX
RJ7	=	10ZS2.75x105 (55ksi) @ 2'-8"OC MAX
RB1	=	W10 X 45 C=0"
RB2	=	LVL 7 X 11¼
RB3	=	4 X 10
RB4	=	W18 X 35 C=0"
RB5	=	W18 X 97 C=0"
RB6	=	6 X 12
RB7	=	W18 X 35 C=0"
RB8	=	W18 X 35 C=0"
RB9	=	W10 X 54 C=0"
RB10	=	W12 X 14 C=0"
RB11	=	HSS 6 X 6 X ¼ C=0"
RB12	=	6 X 8
RB13	=	4 X 12
RB14	=	HSS 10 X 8 X 5/8
RB15	=	HSS 12 X 8 x 5/8

NOTE:
SEE SHEET S1.00 & S1.10 FOR ALL OTHER SCHEDULES, TABLES, LEGENDS, AND PLAN NOTES NOT SHOWN ON THIS PLAN.

LEGEND:

- 8" CMU WALL W/ #5 VERT @ 16"OC & #5 HORIZ @ 16"OC
- 10" CMU WALL W/ #5 VERT @ 16"OC EF & #5 @ 16"OC HORIZ EF
- CANTILEVER CMU WALL W/ FTG PER 10 S2.00
- 10" PRE-INSULATED (HI-R-H) CMU WALL W/ #5 VERT @ 16"OC @ CENTERLINE OF GROUT & #5 HORIZ @ 16"OC (REFER TO MANUF REQUIREMENTS & RECOMMENDATIONS)
- CONC RETAINING WALL PER 3 S2.10
- WOOD STUD WALL PER FRAMING NOTE #2 & #3 ON S1.10 UNO
- WOOD STUD WALL W/ CURB PER ARCH & 9B S0.10
- 24" WIDE X 12" THK CONT FTG X 18" DP BLW LOWEST ADJACENT GRADE W/ (4) #4 T&B, (8) TOTAL
- 12" WIDE CONT FTG X 18" DP BLW LOWEST ADJACENT GRADE W/ (2) #4 T&B, (4) TOTAL
- AREA OF DEPRESSED SLAB PER ARCH & 15 S0.30

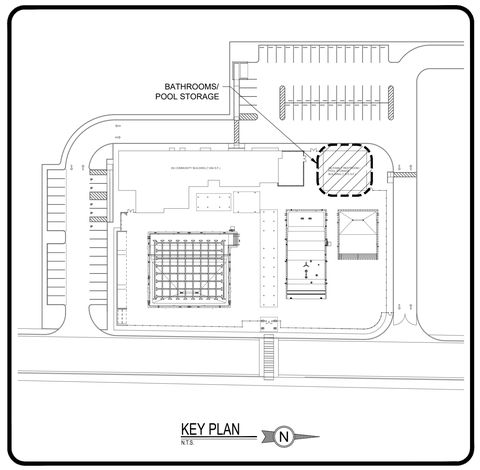

KEY PLAN
N.T.S.

AGENCY

REVIEWED FOR CODE COMPLIANCE BY:
WILLDAN ENGINEERING

Approval of these plans & specifications shall not be construed to be a permit for, or an approval of any violation of any Federal, State, County or City laws or ordinances. One set of approved plans must be kept on the job until completion.

10:04:49 AM Jul 21, 2025

PTN_____ APPL_____

FLEWELLING & MOODY
architecture planning interiors

HEADQUARTERS OFFICE:
99 South Lake Avenue, Suite 300
Pasadena, CA 91101
Phone: 323.543.8300
E-Mail: fm-pasadena@flewelling-moody.com

ANTELOPE VALLEY OFFICE:
1035 West Lancaster Boulevard
Lancaster, California 93534
Phone: 661.949.0771
E-Mail: fm-lancaster@flewelling-moody.com

An Employee Owned Corporation

ARCHITECT

CONSULTANT

REGISTERED PROFESSIONAL ENGINEER JEFFREY SCOTT LINDSEY No.6422 STRUCTURAL STATE OF CALIFORNIA

RGSE inc.
Structural Engineers
2720 Cochran St. Suite 8B
Simi Valley, CA 93065
P: 805.522.3379
www.rgseinc.com
info@rgseinc.com

Drawn by aaronc@rgseinc.com
Checked by sokheanc@rgseinc.com

Revisions

No.	Date	Description

All dimensions must be checked at the job by the contractor who accepts full responsibility for their accuracy under the contract. These plans & the specifications in connection therewith have been prepared for a specific site. Any and all responsibility for their use in whole or in part on any other site is hereby disclaimed by Flewelling & Moody.

CITY OF RIDGECREST

SGT. JOHN PINNEY MEMORIAL POOL REPLACEMENT PROJECT

205 S WARNER ST, RIDGECREST,CA 93555

BATHROOMS/ POOL STORAGE STRUCTURAL PLANS

Job No. 3055-0100

Date 04-18-2025

S1.20

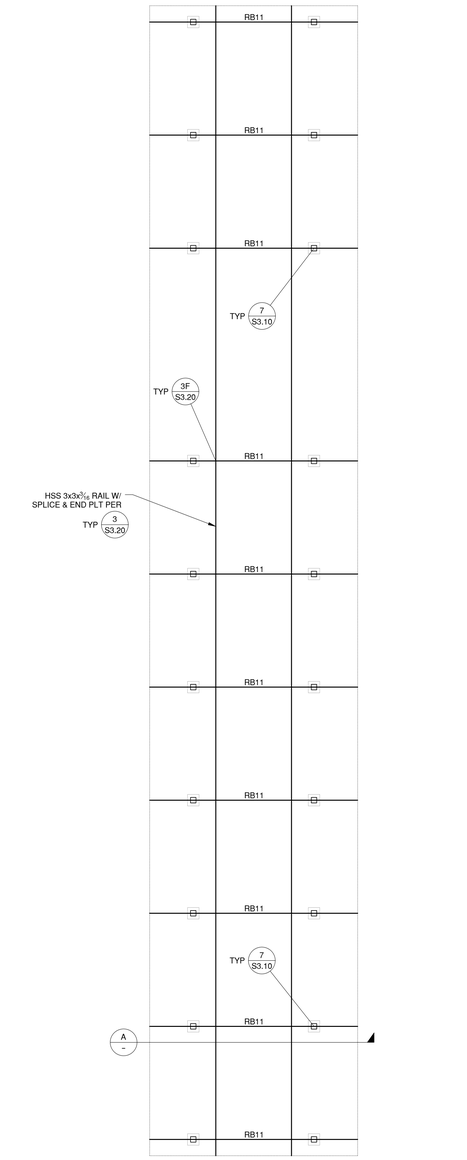

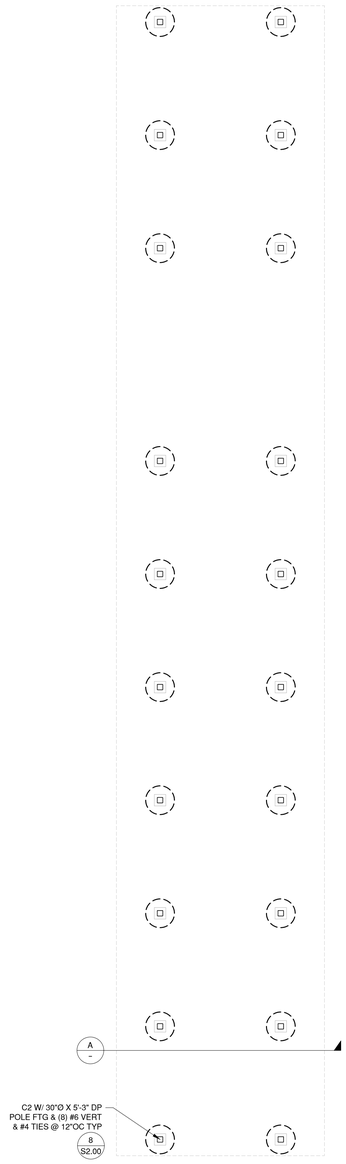

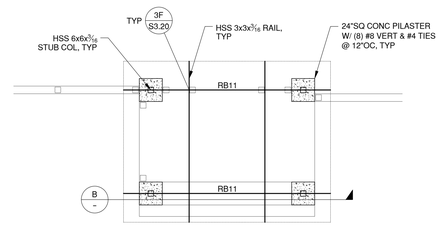

ROOF FRAMING PLAN

SCALE: 3/16"=1'-0"

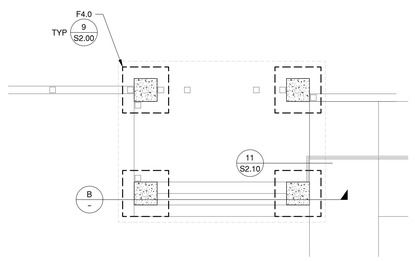

FOUNDATION PLAN

SCALE: 3/16"=1'-0"

NOTE:
SEE SHEET S1.00 & S1.10 FOR ALL OTHER SCHEDULES, TABLES, LEGENDS, AND PLAN NOTES NOT SHOWN ON THIS PLAN.

FRAMING SCHEDULE:

RJ1	=	18" TJI 360 @ 16"OC OR LVL 1¾ X 18 @ 16"OC
RJ2	=	2 X 12 @ 16"OC
RJ3	=	14" TJI 210 @ 16"OC
RJ4	=	16" TJI 560 @ 16"OC
RJ5	=	16" TJI 210 @ 16"OC
RJ6	=	7ZS2.25x105 (55ksi) @ 2'-8"OC MAX
RJ7	=	10ZS2.75x105 (55ksi) @ 2'-8"OC MAX
RB1	=	W10 X 45 C=0"
RB2	=	LVL 7 X 11¼
RB3	=	4 X 10
RB4	=	W18 X 35 C=0"
RB5	=	W18 X 97 C=0"
RB6	=	6 X 12
RB7	=	W18 X 35 C=0"
RB8	=	W18 X 35 C=0"
RB9	=	W10 X 54 C=0"
RB10	=	W12 X 14 C=0"
RB11	=	HSS 6 X 6 X ½ C=0"
RB12	=	6 X 8
RB13	=	4 X 12
RB14	=	HSS 10 X 8 X ⅝
RB15	=	HSS 12 X 8 x ⅝

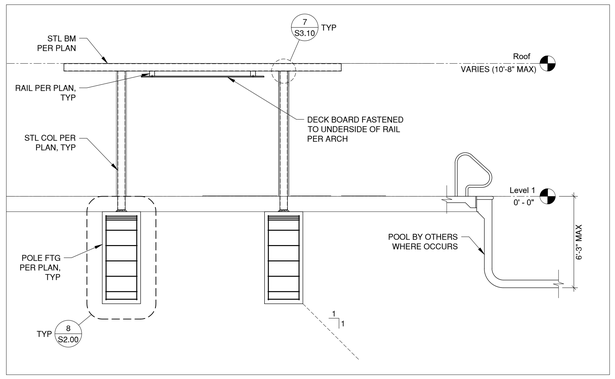

SECTION A

SCALE: 1/4"=1'-0"

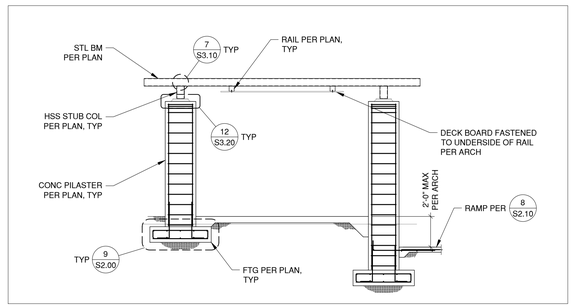

SECTION B

SCALE: 1/4"=1'-0"

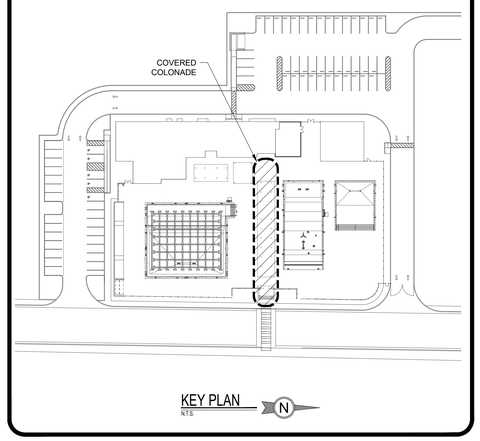

KEY PLAN

N.T.S.

AGENCY

REVIEWED FOR CODE COMPLIANCE BY:
WILLDAN ENGINEERING

Approval of these plans & specifications shall not be construed to be a permit for, or an approval of any violation of any Federal, State, County or City laws or ordinances. One set of approved plans must be kept on the job until completion.

10:04:51 AM Jul 21, 2025

PTN_____ APPL_____

FLEWELLING & MOODY
architecture planning interiors

HEADQUARTERS OFFICE:
99 South Lake Avenue, Suite 300
Pasadena, CA 91101
Phone: 323.543.8300
E-Mail: fm-pasadena@flewelling-moody.com

ANTELOPE VALLEY OFFICE:
1035 West Lancaster Boulevard
Lancaster, California 93534
Phone: 661.949.0771
E-Mail: fm-lancaster@flewelling-moody.com

An Employee Owned Corporation

ARCHITECT

CONSULTANT

REGISTERED PROFESSIONAL ENGINEER JEFFREY SCOTT HARRIS No.6432 STRUCTURAL STATE OF CALIFORNIA

RGSE inc.
Structural Engineers
2720 Cochran St. Suite 8B
Simi Valley, CA 93065
P: 805.522.3379
www.rgseinc.com
info@rgseinc.com

Drawn by aaronc@rgseinc.com

Checked by sokheanc@rgseinc.com

Revisions

No.	Date	Description

All dimensions must be checked at the job by the contractor who accepts full responsibility for their accuracy under the contract. These plans & the specifications in connection therewith have been prepared for a specific site. Any and all responsibility for their use in whole or in part on any other site is hereby disclaimed by Flewelling & Moody.

CITY OF RIDGECREST

SGT. JOHN PINNEY MEMORIAL POOL REPLACEMENT PROJECT

205 S WARNER ST, RIDGECREST,CA 93555

COVERED COLONADE STRUCTURAL PLANS & SECTIONS

Job No. 3055-0100

Date 04-18-2025

S1.30

ROOF FRAMING PLAN

SCALE: 1/4"=1'-0"

FOUNDATION PLAN

SCALE: 1/4"=1'-0"

FRAMING SCHEDULE:

RJ1	=	18" TJI 360 @ 16"OC OR LVL 1¾ X 18 @ 16"OC
RJ2	=	2 X 12 @ 16"OC
RJ3	=	14" TJI 210 @ 16"OC
RJ4	=	16" TJI 560 @ 16"OC
RJ5	=	16" TJI 210 @ 16"OC
RJ6	=	7ZS2.25x105 (55ksi) @ 2'-8"OC MAX
RJ7	=	10ZS2.75x105 (55ksi) @ 2'-8"OC MAX
RB1	=	W10 X 45 C=0"
RB2	=	LVL 7 X 11¼
RB3	=	4 X 10
RB4	=	W18 X 35 C=0"
RB5	=	W18 X 97 C=0"
RB6	=	6 X 12
RB7	=	W18 X 35 C=0"
RB8	=	W18 X 35 C=0"
RB9	=	W10 X 54 C=0"
RB10	=	W12 X 14 C=0"
RB11	=	HSS 6 X 6 X ¼ C=0"
RB12	=	6 X 8
RB13	=	4 X 12
RB14	=	HSS 10 X 8 X ⅝
RB15	=	HSS 12 X 8 x ⅝

LEGEND:

- 8" CMU WALL W/ #5 VERT @ 16"OC & #5 HORIZ @ 16"OC
- 10" CMU WALL W/ #5 VERT @ 16"OC EF & #5 @ 16"OC HORIZ EF
- CANTILEVER CMU WALL W/ FTG PER 10/S2.00
- 10" PRE-INSULATED (HI-R-H) CMU WALL W/ #5 VERT @ 16"OC @ CENTERLINE OF GROUT & #5 HORIZ @ 16"OC (REFER TO MANUF REQUIREMENTS & RECOMMENDATIONS)
- CONC RETAINING WALL PER 3/S2.10
- WOOD STUD WALL PER FRAMING NOTE #2 & #3 ON S1.10 UNO
- WOOD STUD WALL W/ CURB PER ARCH & 9B/S0.10
- 24" WIDE X 12" THK CONT FTG X 18" DP BLW LOWEST ADJACENT GRADE W/ (4) #4 T&B, (8) TOTAL
- 12" WIDE CONT FTG X 18" DP BLW LOWEST ADJACENT GRADE W/ (2) #4 T&B, (4) TOTAL
- AREA OF DEPRESSED SLAB PER ARCH & 15/S0.30

NOTE:
SEE SHEET S1.00 & S1.10 FOR ALL OTHER SCHEDULES, TABLES, LEGENDS, AND PLAN NOTES NOT SHOWN ON THIS PLAN.

STEEL DECK SCHEDULE

D1

MARK	STEEL DECK TYPE	GAGE	TOTAL THICKNESS (I)	CONCRETE TYPE	REINF	STEEL DECK SCREW PATTERN		
						END & EDGE	INT	SEAM
D1	VERCO 'DOVETAIL' (PRIMER PAINTED PER ARCH)	20	2"	N/A	N/A	#12 SMS (GALV) W/ NEOPRENE WASHER EA FLUTE @ EA SUPPORT	#12 SMS (GALV) W/ NEOPRENE WASHER EA FLUTE @ EA SUPPORT	PUNCH-LOK SIDELAPS CONN @ 12"OC

TYP CMU WALL REINF AT GLASSBLOCK

A

SCALE: 1/2"=1'-0"

FOUNDATION PLAN

SCALE: 1/4"=1'-0"

KEY PLAN

N.T.S.

AGENCY

REVIEWED FOR CODE COMPLIANCE BY: WILLDAN ENGINEERING

Approval of these plans & specifications shall not be construed to be a permit for, or an approval of any violation of any Federal, State, County or City laws or ordinances. One set of approved plans must be kept on the job until completion.

10:04:54 AM Jul 21, 2025

PTN_____ APPL_____

FLEWELLING & MOODY
architecture planning interiors

HEADQUARTERS OFFICE:
99 South Lake Avenue, Suite 300
Pasadena, CA 91101
Phone: 323.543.8300
E-Mail: fm-pasadena@flewelling-moody.com

ANTELOPE VALLEY OFFICE:
1035 West Lancaster Boulevard
Lancaster, California 93534
Phone: 661.949.0771
E-Mail: fm-lancaster@flewelling-moody.com

An Employee Owned Corporation

ARCHITECT

CONSULTANT

REGISTERED PROFESSIONAL ENGINEER JEFFREY SCOTT LINDBERG No.6432 STRUCTURAL STATE OF CALIFORNIA

RGSE inc.
Structural Engineers
2720 Cochran St. Suite 8B
Simi Valley, CA 93065
P: 805.522.3379
www.rgseinc.com
info@rgseinc.com

Drawn by aaronc@rgseinc.com

Checked by sokheanc@rgseinc.com

Revisions

No.	Date	Description

All dimensions must be checked at the job by the contractor who accepts full responsibility for their accuracy under the contract. These plans & the specifications in connection therewith have been prepared for a specific site. Any and all responsibility for their use in whole or in part on any other site is hereby disclaimed by Flewelling & Moody.

CITY OF RIDGECREST

SGT. JOHN PINNEY MEMORIAL POOL
REPLACEMENT PROJECT

205 S WARNER ST, RIDGECREST,CA 93555

COVERED BLEACHERS STRUCTURAL PLANS & ELEVATION

Job No. 3055-0100

Date 04-18-2025

S1.40

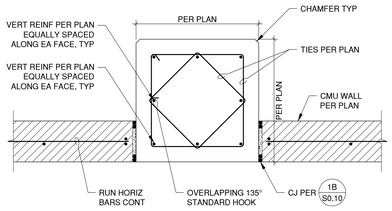

A TYP CONC PILASTER

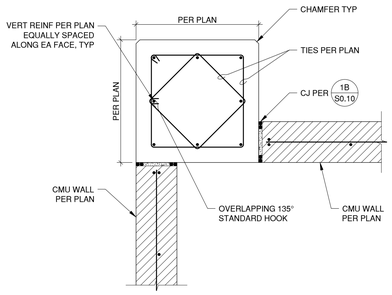

B CONC PILASTER @ CORNER

INTERSECTION AT PILASTER SCALE:1"=1'-0" 14

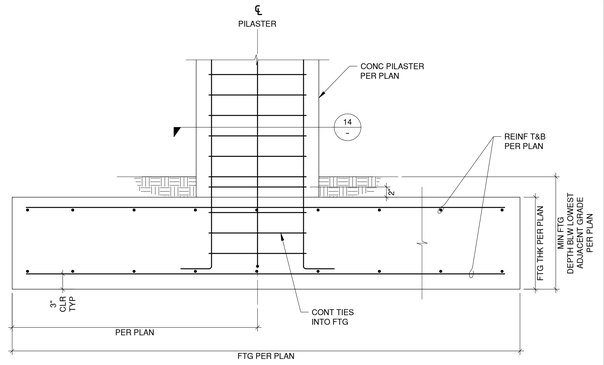

SECTION AT FTG SCALE:1"=1'-0" 15

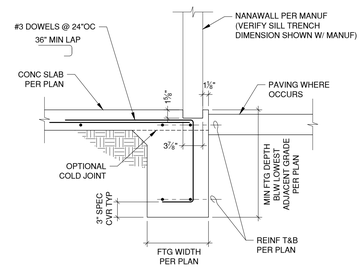

SECTION AT NANAWALL SCALE:1"=1'-0" 16

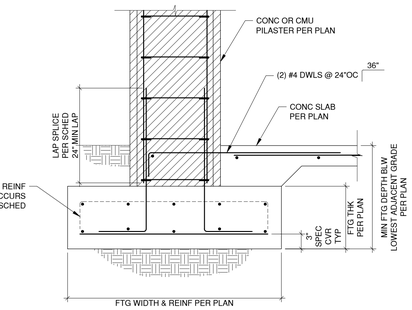

PILASTER ON FOOTING SCALE:1"=1'-0" 9

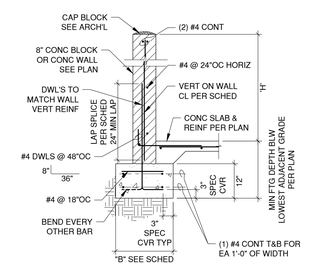

WALL SCHEDULE		
"H"<	"B"	VERT REINF
4'-0"	2'-6"	#4 @16"OC
5'-0"	3'-0"	#4 @16"OC
6'-0"	3'-3"	#5 @16"OC
8'-0"	4'-3"	#5 @ 8"OC

NOTES:
1. REFER TO GENERAL NOTES AND TYPICAL DETAILS FOR MASONRY AND CONCRETE.
2. REFER TO ARCHITECTURAL DRAWINGS FOR WALL LOCATION, DIMENSIONS, FINISHES, ETC.
3. REFER TO TYPICAL DETAILS FOR CONTROL JOINTS.

CANTILEVER CMU WALL SCALE:1"=1'-0" 10

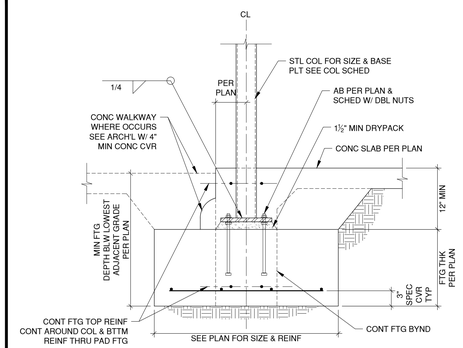

FTG AT SLAB EDGE SCALE:1"=1'-0" 11

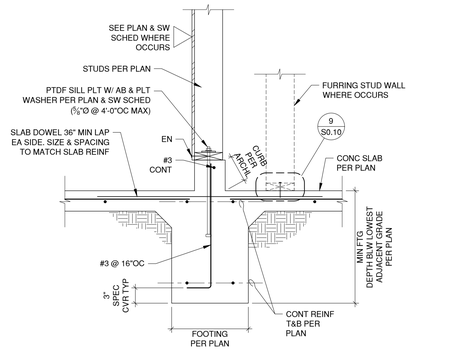

INTERIOR SECTION SCALE:1"=1'-0" 12

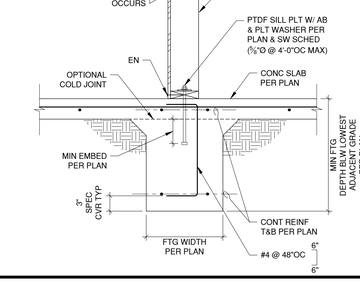

INTERIOR SECTION SCALE:1"=1'-0" 5

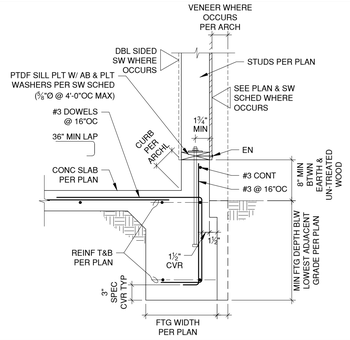

EXTERIOR FOOTING SECTION SCALE:1"=1'-0" 6

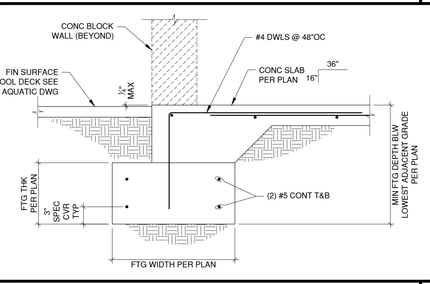

SECTION AT OPENING SCALE:1"=1'-0" 7

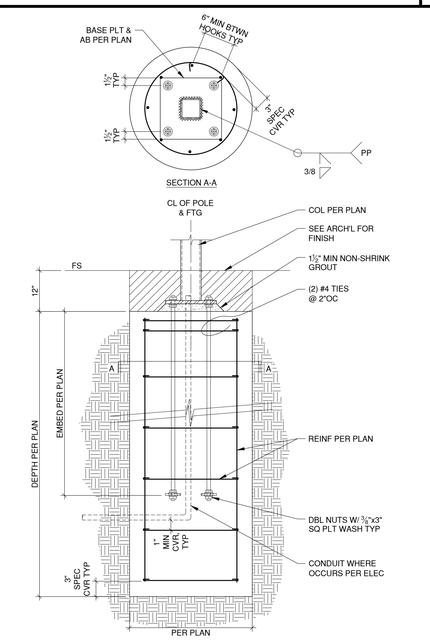

POLE FOOTING SCALE:1"=1'-0" 8

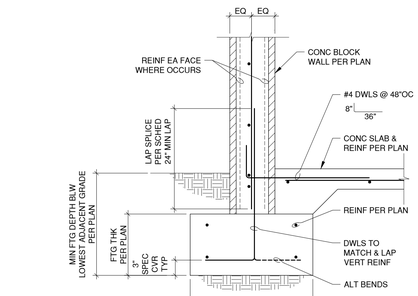

EXTERIOR WALL SECTION SCALE:1"=1'-0" 1

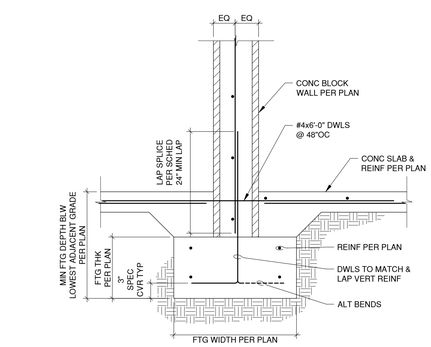

INTERIOR WALL SECTION SCALE:1"=1'-0" 2

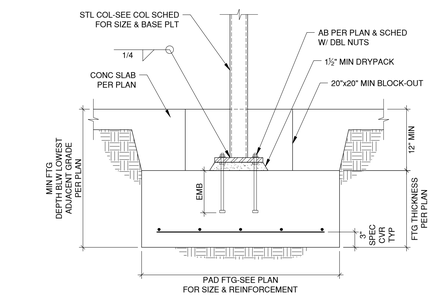

STL PIPE AT FDN SCALE:1"=1'-0" 3

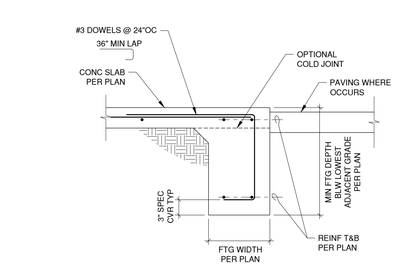

SECTION AT OPNG SCALE:1"=1'-0" 4

AGENCY

REVIEWED FOR CODE COMPLIANCE BY: WILLDAN ENGINEERING

Approval of these plans & specifications shall not be construed to be a permit for, or an approval of any violation of any Federal, State, County or City laws or ordinances. One set of approved plans must be kept on the job until completion.

10:04:56 AM Jul 21, 2025

PTN_____ APPL_____

FLEWELLING & MOODY
architecture planning interiors

HEADQUARTERS OFFICE:
99 South Lake Avenue, Suite 300
Pasadena, CA 91101
Phone: 323.543.8300
E-Mail: fm-pasadena@flewelling-moody.com

ANTELOPE VALLEY OFFICE:
1035 West Lancaster Boulevard
Lancaster, California 93534
Phone: 661.949.0771
E-Mail: fm-lancaster@flewelling-moody.com

An Employee Owned Corporation

ARCHITECT

CONSULTANT

REGISTERED PROFESSIONAL ENGINEER JEFFREY SCOTT LINDSEY No.6437 STRUCTURAL STATE OF CALIFORNIA

RGSE INC.
Structural Engineers
2720 Cochran St. Suite 8B
Simi Valley, CA 93065
P: 805.522.3379
www.rgseinc.com
info@rgseinc.com

Drawn by aaronc@rgseinc.com
Checked by sokheanc@rgseinc.com

Revisions

No.	Date	Description

All dimensions must be checked at the job by the contractor who accepts full responsibility for their accuracy under the contract. These plans & the specifications in connection therewith have been prepared for a specific site. Any and all responsibility for their use in whole or in part on any other site is hereby disclaimed by Flewelling & Moody.

CITY OF RIDGECREST

SGT. JOHN PINNEY MEMORIAL POOL REPLACEMENT PROJECT

205 S WARNER ST, RIDGECREST,CA 93555

FOUNDATION DETAILS

Job No. 3055-0100

Date 04-18-2025

S2.00

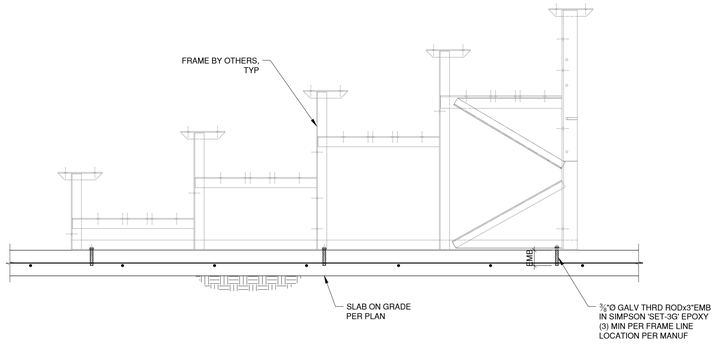

BLEACHER ANCHORAGE — SCALE:1"=1'-0" — 9

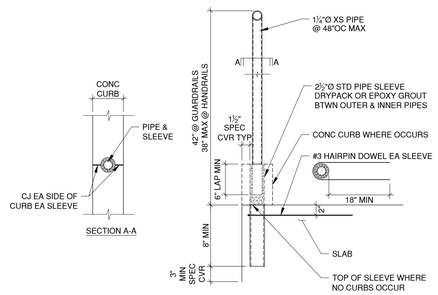

GUARD RAIL POST @ SLAB EDGE — SCALE:1"=1'-0" — 10

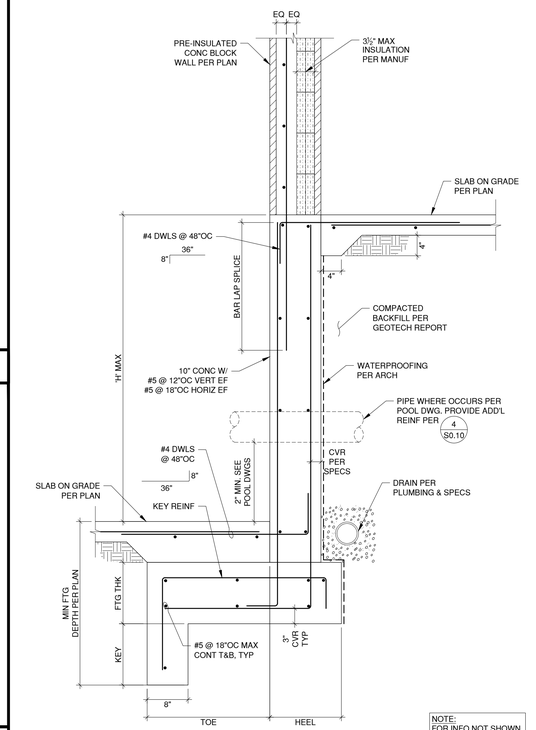

PIPE THROUGH RETAINING WALL DETAIL — SCALE:1"=1'-0" — 6

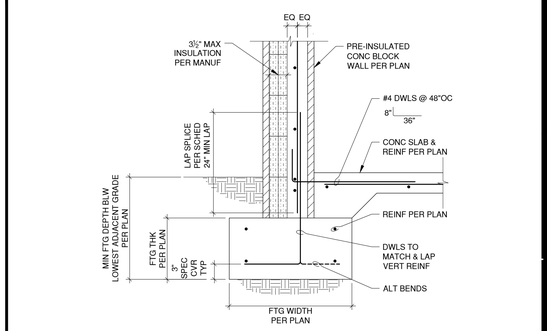

EXT PRE-INSULATED CMU WALL SECTION — SCALE:1"=1'-0" — 1

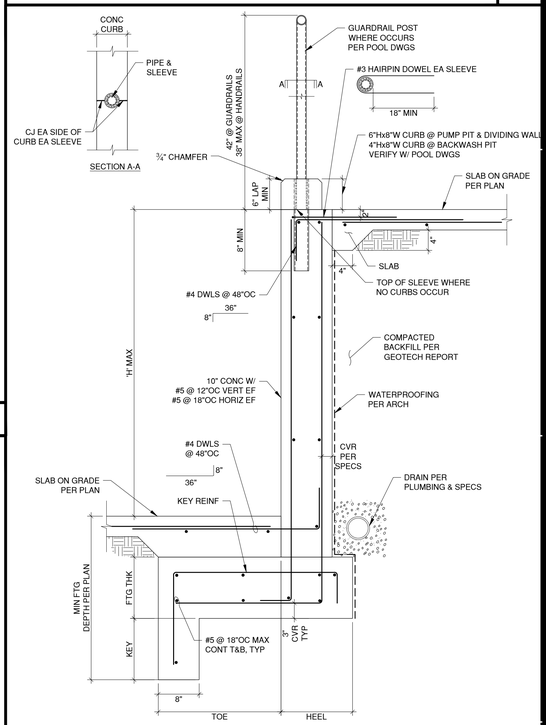

WALL REINF SCHEDULE					
'H' MAX	TOE	HEEL	FTG THK	KEY	KEY REINF
2'-0"	1'-0"	1'-0"	1'-0"	N/A	N/A
5'-0"	2'-0"	1'-0"	1'-0"	1'-0"	#5 @ 16"OC

RETAINING WALL DETAIL AT PIT — SCALE:1"=1'-0" — 3

- — SCALE:1"=1'-0" — 14

- — SCALE:1"=1'-0" — 15

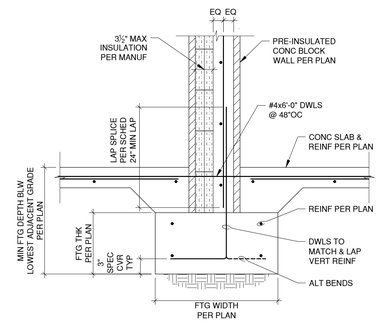

INT PRE-INSULATED CMU WALL SECTION — SCALE:1"=1'-0" — 16

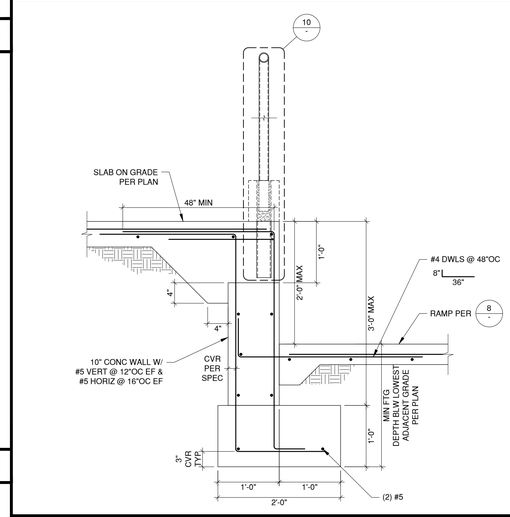

GUARDRAIL OVER RETAINING WALL — SCALE:1"=1'-0" — 11

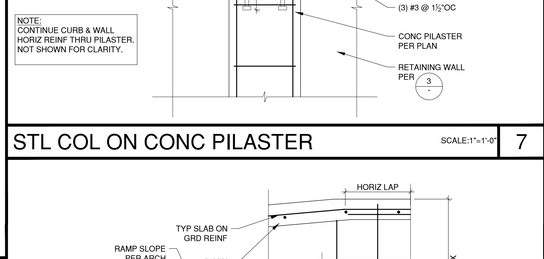

STL COL ON CONC PILASTER — SCALE:1"=1'-0" — 7

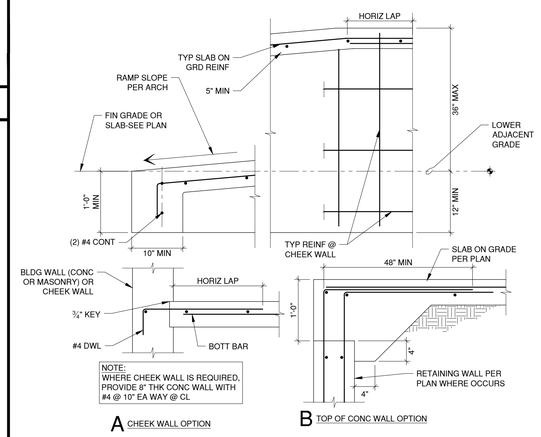

RAMP SECTION — SCALE:1"=1'-0" — 8

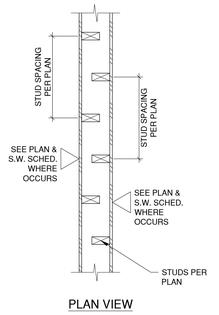

STAGG STUD WALL DETAIL — SCALE:1"=1'-0" — 12

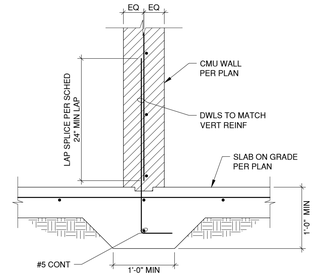

NON-BEARING CMU WALL — SCALE:1"=1'-0" — 4

AGENCY

REVIEWED FOR CODE COMPLIANCE BY: WILLDAN ENGINEERING

Approval of these plans & specifications shall not be construed to be a permit for, or an approval of any violation of any Federal, State, County or City laws or ordinances. One set of approved plans must be kept on the job until completion.

10:04:57 AM Jul 21, 2025

PTN_____ APPL_____

FLEWELLING & MOODY
architecture planning interiors

HEADQUARTERS OFFICE:
99 South Lake Avenue, Suite 300
Pasadena, CA 91101
Phone: 323.543.8300
E-Mail: fm-pasadena@flewelling-moody.com

ANTELOPE VALLEY OFFICE:
1035 West Lancaster Boulevard
Lancaster, California 93534
Phone: 661.949.0771
E-Mail: fm-lancaster@flewelling-moody.com

An Employee Owned Corporation

ARCHITECT

CONSULTANT

REGISTERED PROFESSIONAL ENGINEER JEREMY SCOTT LUNDBERG No.6432 STRUCTURAL STATE OF CALIFORNIA

RGSE inc.
Structural Engineers
2720 Cochran St. Suite 8B
Simi Valley, CA 93065
P: 805.522.3379
www.rgseinc.com
info@rgseinc.com

Drawn by aaronc@rgseinc.com
Checked by sokheanc@rgseinc.com

Revisions

No.	Date	Description

All dimensions must be checked at the job by the contractor who accepts full responsibility for their accuracy under the contract. These plans & the specifications in connection therewith have been prepared for a specific site. Any and all responsibility for their use in whole or in part on any other site is hereby disclaimed by Flewelling & Moody.

CITY OF RIDGECREST

SGT. JOHN PINNEY MEMORIAL POOL REPLACEMENT PROJECT

205 S WARNER ST, RIDGECREST,CA 93555

FOUNDATION DETAILS

Job No. 3055-0100

Date 04-18-2025

S2.10

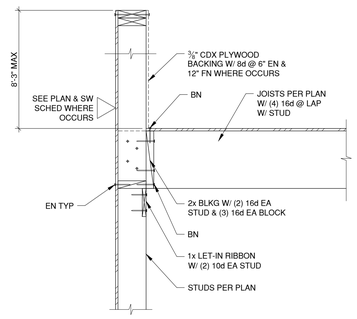

PARAPET SECTION SCALE:1"=1'-0" 13

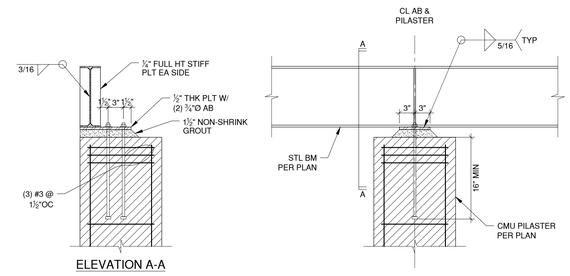

ELEVATION A-A

SECTION AT PILASTER SCALE:1"=1'-0" 9

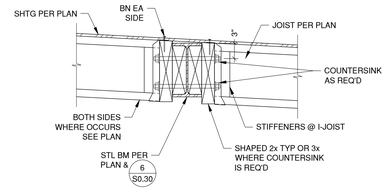

STEEL BM SECTION SCALE:1"=1'-0" 5

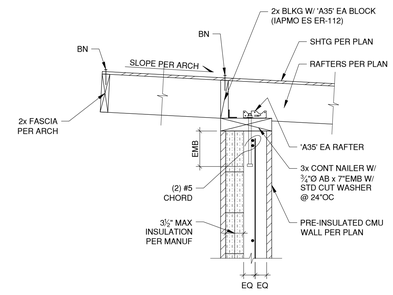

ROOF EAVE SECTION SCALE:1"=1'-0" 1

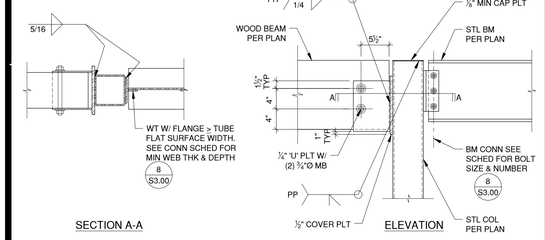

SECTION A-A ELEVATION

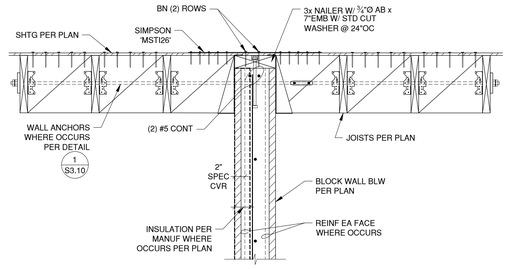

SECTION AT WALL SCALE:1"=1'-0" 10

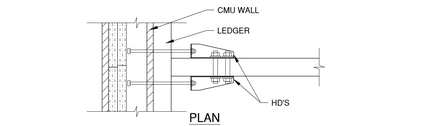

PLAN

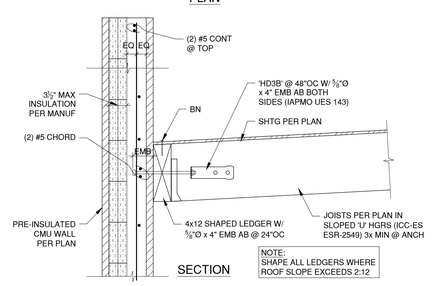

SECTION

SECTION AT WALL SCALE:1"=1'-0" 6

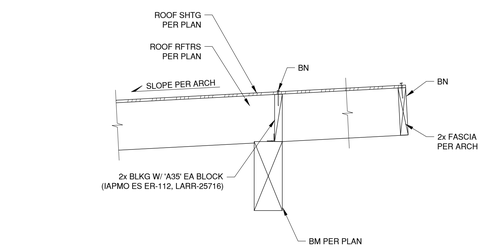

EAVE SECTION SCALE:1"=1'-0" 2

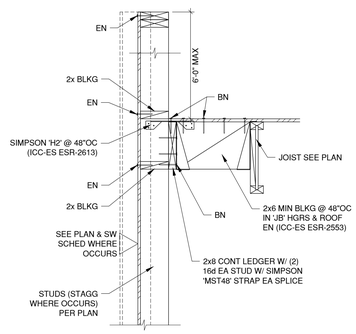

SECTION AT PARAPET SCALE:1"=1'-0" 16

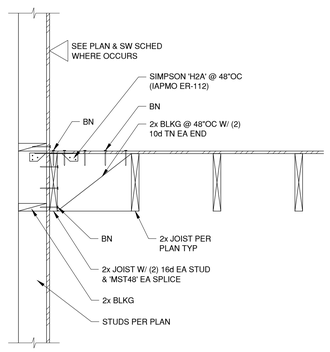

LOW ROOF SECTION SCALE:1"=1'-0" 12

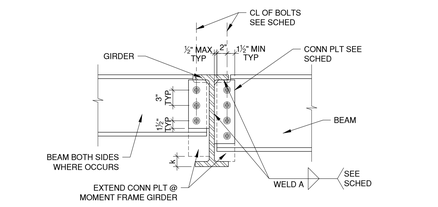

SIMPLE BEAM CONNECTION SCHEDULE SHEAR PLATE CONNECTION			
MEMBER (DEPTH)	# OF BOLTS ⅞" Ø A325N	CONN PLT 't'	WELD SIZE 'A'
< 8"	2	⅜"	¼"
8" - 10"	2	⅜"	¼"
12" - 14"	3	⅜"	¼"
15" - 16"	4	⅜"	¼"
18"	5	⅜"	¼"

NOTES:
1. FILLET WELD SIZE SHALL BE AS SHOWN UNLESS A GREATER SIZE IS REQUIRED BY A.I.S.C. TABLE 1.17. 2A.
2. DOUBLE ANGLES MAY BE SUBSTITUTED FOR CONNECTOR PLATES, PROVIDED THEY MEET OR EXCEED THE REQUIREMENTS OF THE A.I.S.C.
3. ALL CONNECTIONS TO COLUMNS AND ALL CONNECTIONS AT VIBRATION LOAD AREAS TO BE NON-SLIP (A490S). ALL OTHER CONNECTIONS MAY BE BEARING TYPE (A325N) UNO.

BEAM CONNECTION DETAIL SCALE:1"=1'-0" 8

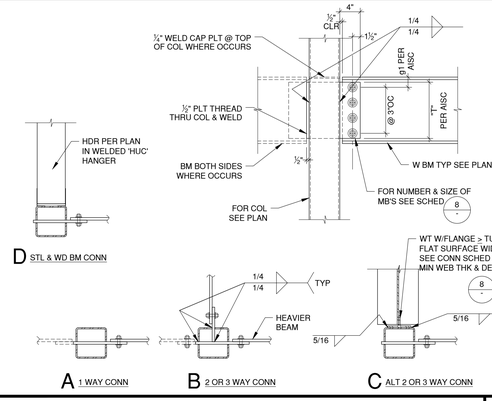

BM TO COL CONN SCALE:1"=1'-0" 4

AGENCY

REVIEWED FOR CODE COMPLIANCE BY:
WILLDAN ENGINEERING
Approval of these plans & specifications shall not be construed to be a permit for, or an approval of any violation of any Federal, State, County or City laws or ordinances. One set of approved plans must be kept on the job until completion.
10:04:59 AM Jul 21, 2025
PTN APPL

FLEWELLING & MOODY
architecture planning interiors

HEADQUARTERS OFFICE:
99 South Lake Avenue, Suite 300
Pasadena, CA 91101
Phone: 323.543.8300
E-Mail: fm-pasadena@flewelling-moody.com

ANTELOPE VALLEY OFFICE:
1035 West Lancaster Boulevard
Lancaster, California 93534
Phone: 661.949.0771
E-Mail: fm-lancaster@flewelling-moody.com

An Employee Owned Corporation

ARCHITECT

CONSULTANT

REGISTERED PROFESSIONAL ENGINEER JEREMIC SCOTT LUNDBERG No.6332 STRUCTURAL STATE OF CALIFORNIA

RGSE inc.
Structural Engineers
2720 Cochran St. Suite 8B
Simi Valley, CA 93065
P: 805.522.3379
www.rgseinc.com
info@rgseinc.com

Drawn by aaronc@rgseinc.com
Checked by sokheanc@rgseinc.com

Revisions

No.	Date	Description

All dimensions must be checked at the job by the contractor who accepts full responsibility for their accuracy under the contract. These plans & the specifications in connection therewith have been prepared for a specific site. Any and all responsibility for their use in whole or in part on any other site is hereby disclaimed by Flewelling & Moody.

CITY OF RIDGECREST

SGT. JOHN PINNEY MEMORIAL POOL REPLACEMENT PROJECT

205 S WARNER ST, RIDGECREST,CA 93555

FRAMING DETAILS

Job No. 3055-0100
Date 04-18-2025

S3.00

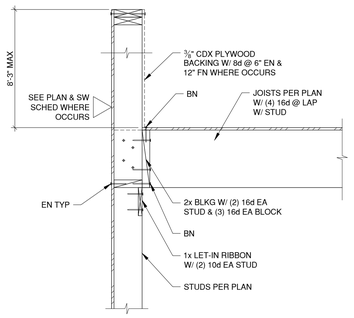

PARAPET SECTION — SCALE:1"=1'-0" — 13

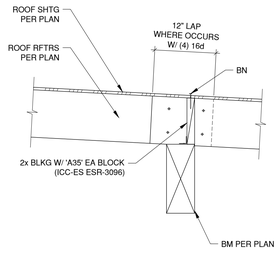

SECTION AT BM — SCALE:1"=1'-0" — 14

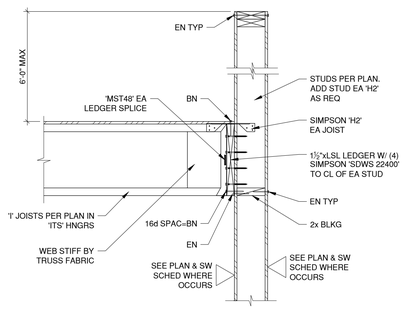

PARAPET SECTION — SCALE:1"=1'-0" — 15

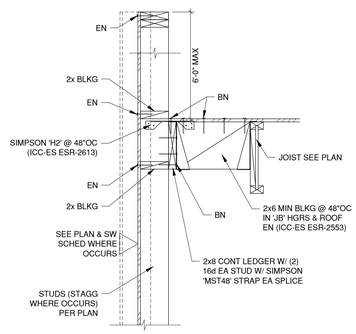

SECTION AT PARAPET — SCALE:1"=1'-0" — 16

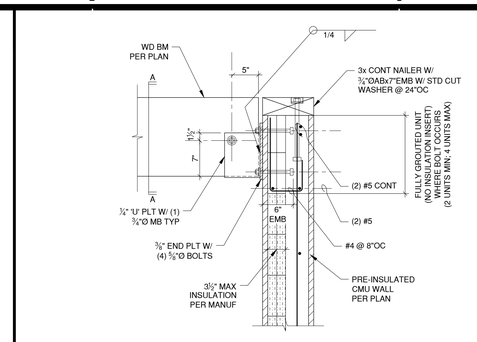

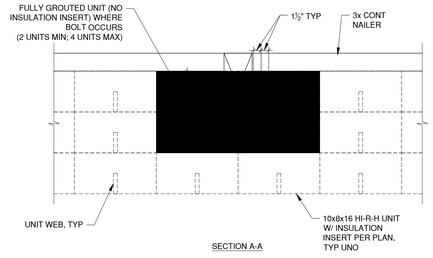

BM TO WALL CONN — SCALE:1"=1'-0" — 9

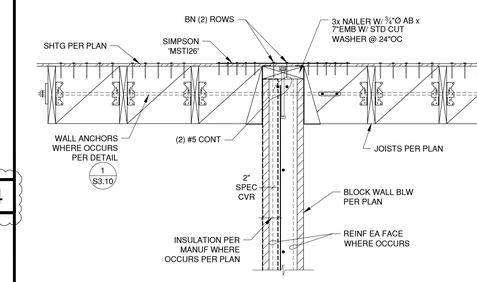

SECTION AT WALL — SCALE:1"=1'-0" — 10

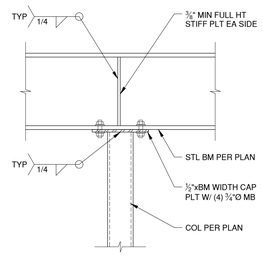

COLUMN AT GIRDER — SCALE:1"=1'-0" — 11

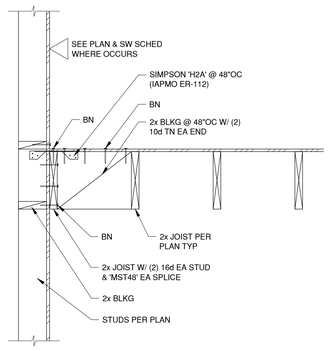

LOW ROOF SECTION — SCALE:1"=1'-0" — 12

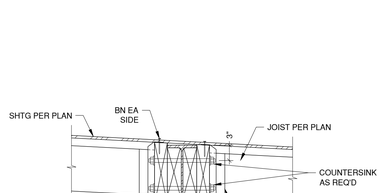

STEEL BM SECTION — SCALE:1"=1'-0" — 5

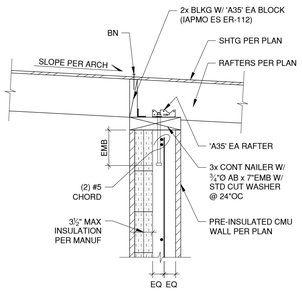

ROOF EAVE SECTION — SCALE:1"=1'-0" — 1

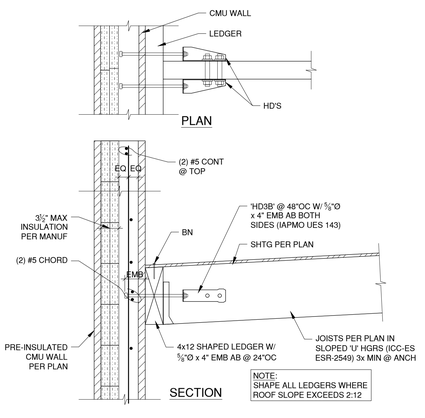

SECTION AT WALL — SCALE:1"=1'-0" — 6

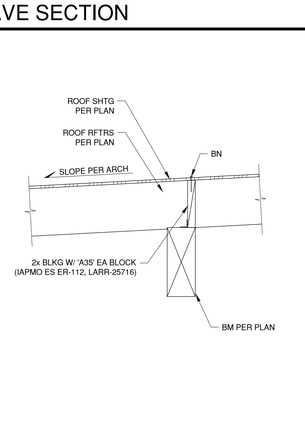

EAVE SECTION — SCALE:1"=1'-0" — 2

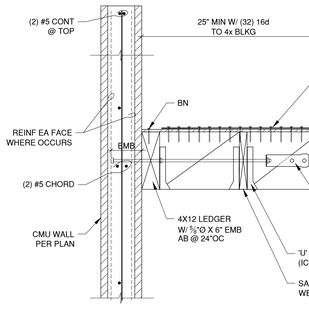

SECTION @ LEDGER — SCALE:1"=1'-0" — 7

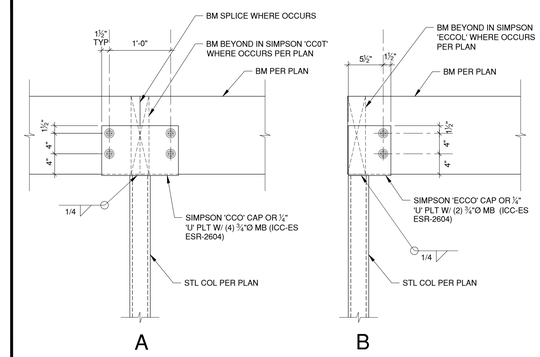

COL AT BM — SCALE:1"=1'-0" — 3

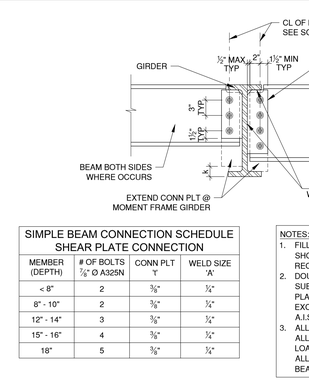

SIMPLE BEAM CONNECTION SCHEDULE SHEAR PLATE CONNECTION			
MEMBER (DEPTH)	# OF BOLTS ⅞" Ø A325N	CONN PLT 't'	WELD SIZE 'A'
< 8"	2	⅜"	¼"
8" - 10"	2	⅜"	¼"
12" - 14"	3	⅜"	¼"
15" - 16"	4	⅜"	¼"
18"	5	⅜"	¼"

NOTES:
1. FILLET WELD SIZE SHALL BE AS SHOWN UNLESS A GREATER SIZE IS REQUIRED BY A.I.S.C. TABLE 1.17. 2A.
2. DOUBLE ANGLES MAY BE SUBSTITUTED FOR CONNECTOR PLATES, PROVIDED THEY MEET OR EXCEED THE REQUIREMENTS OF THE A.I.S.C.
3. ALL CONNECTIONS TO COLUMNS AND ALL CONNECTIONS AT VIBRATION LOAD AREAS TO BE NON-SLIP (A490S). ALL OTHER CONNECTIONS MAY BE BEARING TYPE (A325N) UNO.

BEAM CONNECTION DETAIL — SCALE:1"=1'-0" — 8

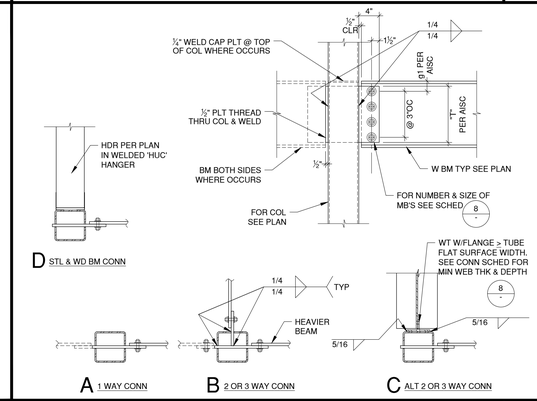

BM TO COL CONN — SCALE:1"=1'-0" — 4

AGENCY

PTN. APPL.

FLEWELLING & MOODY
architecture planning interiors

HEADQUARTERS OFFICE:
99 South Lake Avenue, Suite 300
Pasadena, CA 91101
Phone: 323.543.8300
E-Mail: fm-pasadena@flewelling-moody.com

ANTELOPE VALLEY OFFICE:
1035 West Lancaster Boulevard
Lancaster, California 93534
Phone: 661.949.0771
E-Mail: fm-lancaster@flewelling-moody.com

An Employee Owned Corporation

ARCHITECT

CONSULTANT

REGISTERED PROFESSIONAL ENGINEER JEFFREY SCOTT LONGMIRE No.64328 STRUCTURAL STATE OF CALIFORNIA

RGSE inc.
Structural Engineers
2720 Cochran St. Suite 8B
Simi Valley, CA 93065
P: 805.522.3379
www.rgseinc.com
info@rgseinc.com

Drawn by aaronc@rgseinc.com
Checked by sokheanc@rgseinc.com

Revisions

No.	Date	Description
1	08/27/2025	BID ALT

All dimensions must be checked at the job by the contractor who accepts full responsibility for their accuracy under the contract. These plans & the specifications in connection therewith have been prepared for a specific site. Any and all responsibility for their use in whole or in part on any other site is hereby disclaimed by Flewelling & Moody.

CITY OF RIDGECREST

SGT. JOHN PINNEY MEMORIAL POOL REPLACEMENT PROJECT

205 S WARNER ST, RIDGECREST,CA 93555

ALTERNATE FRAMING DETAILS

Job No. 23195

Date 04-18-2025

S3.00A6

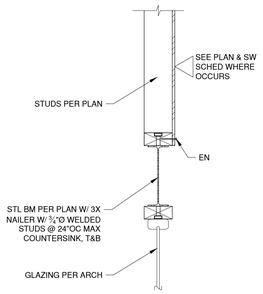

SECTION AT STL BM

SCALE:1"=1'-0" 13

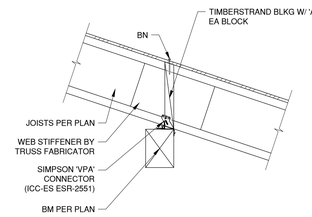

SECTION AT BM

SCALE:1"=1'-0" 9

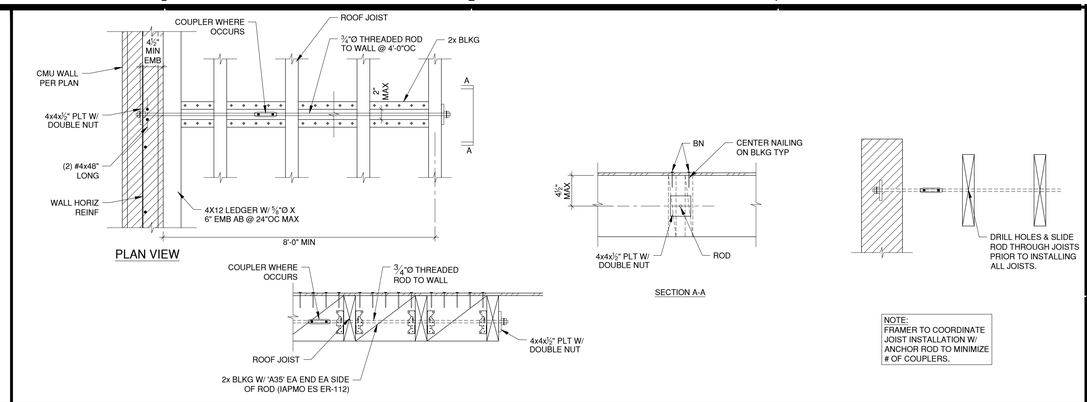

WALL ANCHORAGE DETAIL

SCALE:1"=1'-0" 1

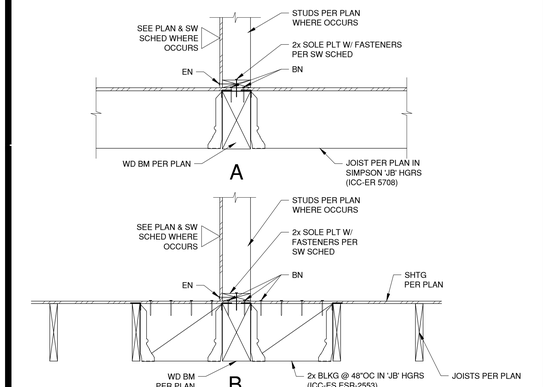

STEEL BM SECTION

SCALE:1"=1'-0" 14

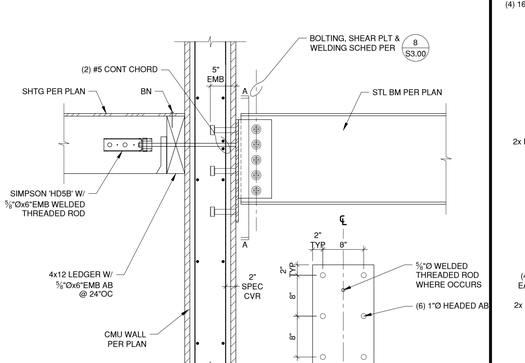

BM TO WALL CONN

SCALE:1"=1'-0" 10

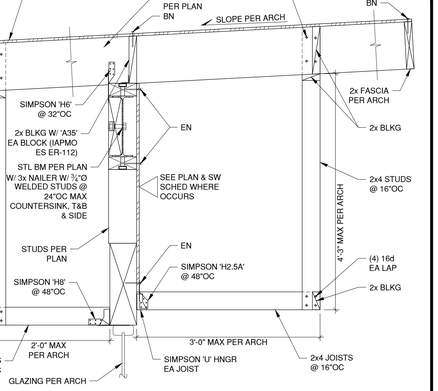

COLUMN SECTION ON TOP OF WALL

SCALE:1"=1'-0" 6

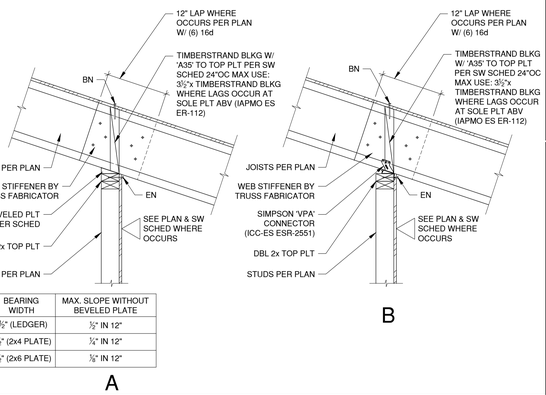

STRUT DETAIL

SCALE:1"=1'-0" 2

SECTION AT WALL

SCALE:1"=1'-0" 15

BM TO WALL CONN

SCALE:1"=1'-0" 11

HSS BM TO COL CONN

SCALE:1"=1'-0" 7

SECTION @ WALL

SCALE:1"=1'-0" 3

SECTION AT BM

SCALE:1"=1'-0" 16

BM TO CMU WALL CONN

SCALE:1"=1'-0" 12

EAVE SECTION

SCALE:1"=1'-0" 8

SECTION AT WALL

SCALE:1"=1'-0" 4

AGENCY

REVIEWED FOR CODE COMPLIANCE BY: WILLDAN ENGINEERING

Approval of these plans & specifications shall not be construed to be a permit for, or an approval of any violation of any Federal, State, County or City laws or ordinances. One set of approved plans must be kept on the job until completion.

10:05:01 AM Jul 21, 2025

PTN_____ APPL_____

FLEWELLING & MOODY
architecture planning interiors

HEADQUARTERS OFFICE:
99 South Lake Avenue, Suite 300
Pasadena, CA 91101
Phone: 323.543.8300
E-Mail: fm-pasadena@flewelling-moody.com

ANTELOPE VALLEY OFFICE:
1035 West Lancaster Boulevard
Lancaster, California 93534
Phone: 661.949.0771
E-Mail: fm-lancaster@flewelling-moody.com

An Employee Owned Corporation

ARCHITECT

CONSULTANT

REGISTERED PROFESSIONAL ENGINEER JEREMIC SCOTT LUNDBERG No.6032 STRUCTURAL STATE OF CALIFORNIA

RGSE inc.
Structural Engineers
2720 Cochran St. Suite 8B
Simi Valley, CA 93065
P: 805.522.3379
www.rgseinc.com
info@rgseinc.com

Drawn by: aaronc@rgseinc.com

Checked by: sokheanc@rgseinc.com

Revisions

No.	Date	Description

All dimensions must be checked at the job by the contractor who accepts full responsibility for their accuracy under the contract. These plans & the specifications in connection therewith have been prepared for a specific site. Any and all responsibility for their use in whole or in part on any other site is hereby disclaimed by Flewelling & Moody.

CITY OF RIDGECREST

SGT. JOHN PINNEY MEMORIAL POOL REPLACEMENT PROJECT

205 S WARNER ST, RIDGECREST,CA 93555

FRAMING DETAILS

Job No. 3055-0100

Date 04-18-2025

S3.10

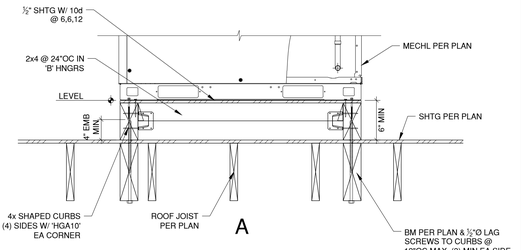

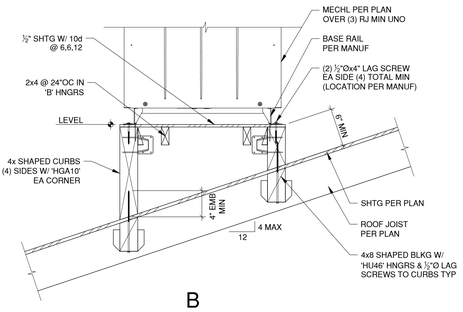

MECH ANCHORAGE DETAILS — SCALE:1"=1'-0" — 14

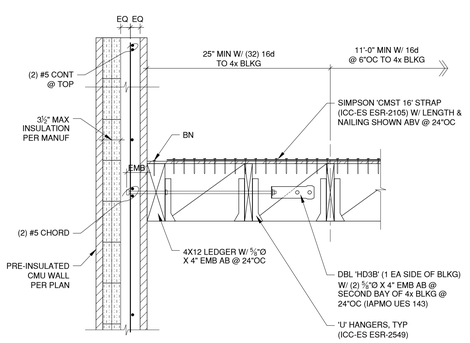

SECTION @ LEDGER — SCALE:1"=1'-0" — 15

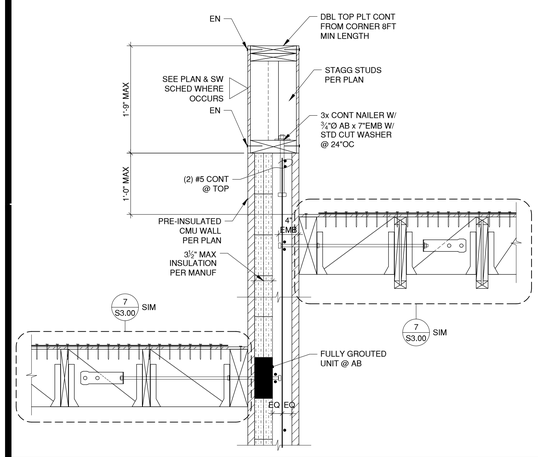

SECTION AT ROOF STEP — SCALE:1"=1'-0" — 16

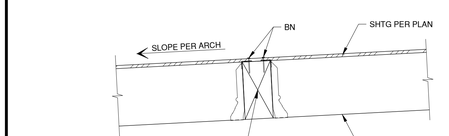

SECTION AT BM — SCALE:1"=1'-0" — 9

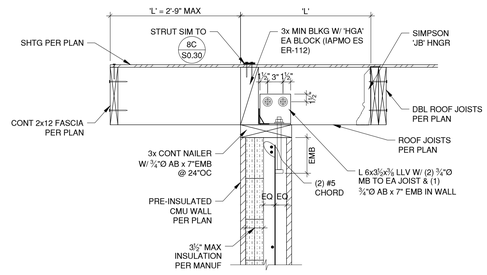

RAKE SECTION — SCALE:1"=1'-0" — 10

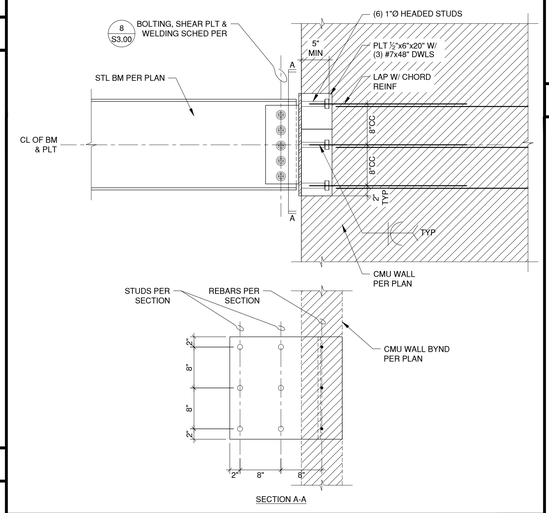

STRUT CONNECTION — SCALE:1"=1'-0" — 11

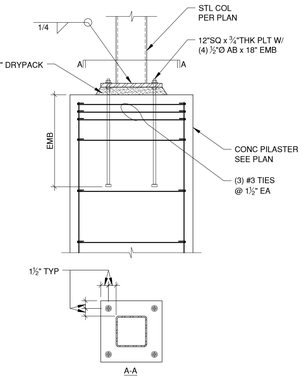

TOP OF PILASTER CONN — SCALE:1"=1'-0" — 12

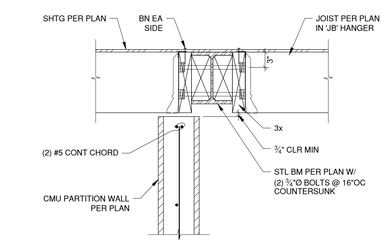

TOP OF CMU PARTITION WALL — SCALE:1"=1'-0" — 6

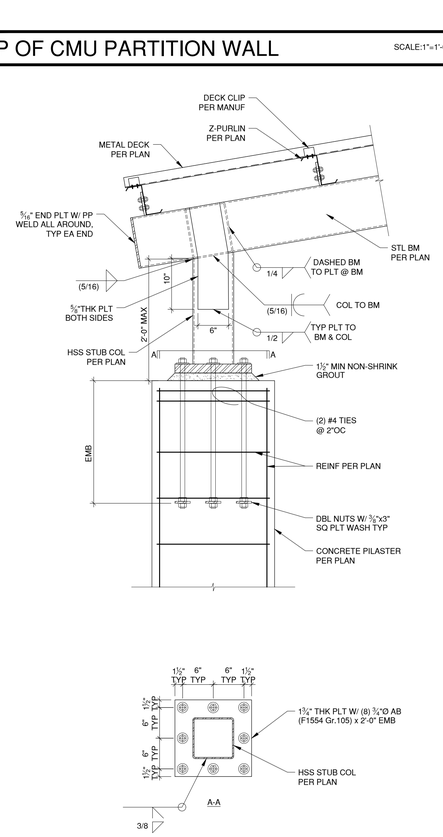

SECTION AT ROOF — SCALE:1"=1'-0" — 5

TOP OF PILASTER CONN — SCALE:1"=1'-0" — 8

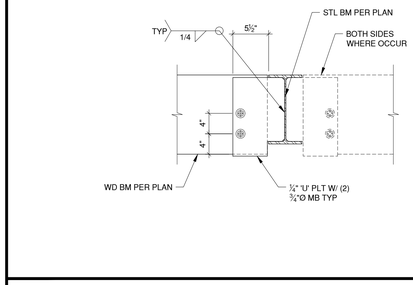

STL BM TO WOOD BM CONN — SCALE:1"=1'-0" — 1

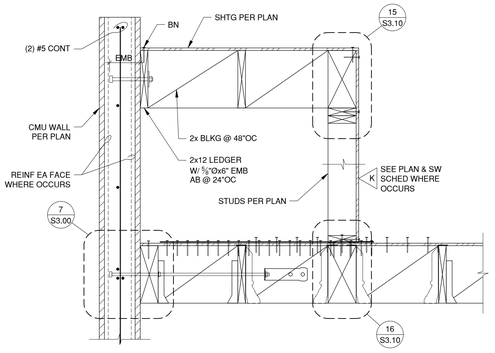

SECTION AT WALL — SCALE:1"=1'-0" — 2

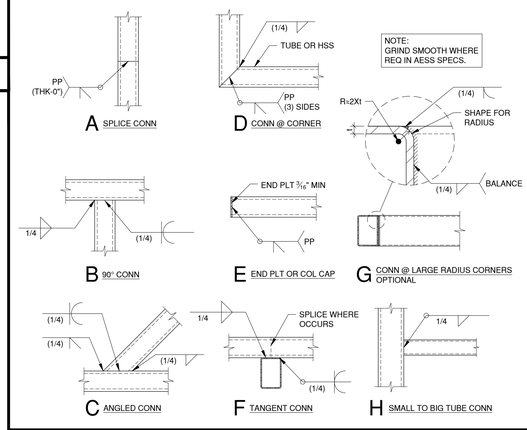

HSS BM TO BM CONN — SCALE:1"=1'-0" — 3

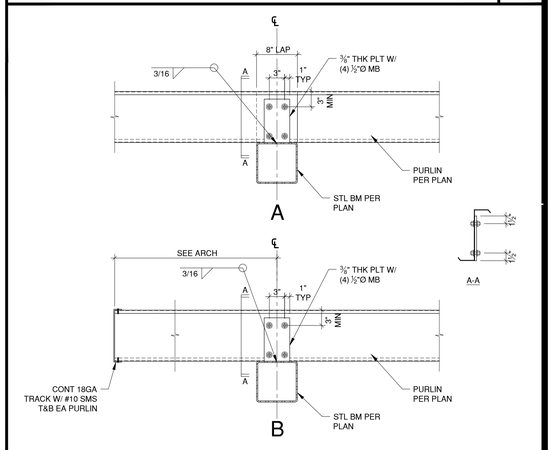

PURLIN AT GIRDER SECTION — SCALE:1"=1'-0" — 4

AGENCY

REVIEWED FOR CODE COMPLIANCE BY: WILLDAN ENGINEERING

Approval of these plans & specifications shall not be construed to be a permit for, or an approval of any violation of any Federal, State, County or City laws or ordinances. One set of approved plans must be kept on the job until completion.

10:05:03 AM Jul 21, 2025

PTN_____ APPL_____

FLEWELLING & MOODY
architecture planning interiors

HEADQUARTERS OFFICE:
99 South Lake Avenue, Suite 300
Pasadena, CA 91101
Phone: 323.543.8300
E-Mail: fm-pasadena@flewelling-moody.com

ANTELOPE VALLEY OFFICE:
1035 West Lancaster Boulevard
Lancaster, California 93534
Phone: 661.949.0771
E-Mail: fm-lancaster@flewelling-moody.com

An Employee Owned Corporation

ARCHITECT

CONSULTANT

RGSE inc.
Structural Engineers
2720 Cochran St. Suite 8B
Simi Valley, CA 93065
P: 805.522.3379
www.rgseinc.com
info@rgseinc.com

Drawn by aaronc@rgseinc.com

Checked by sokheanc@rgseinc.com

Revisions

No.	Date	Description

All dimensions must be checked at the job by the contractor who accepts full responsibility for their accuracy under the contract. These plans & the specifications in connection therewith have been prepared for a specific site. Any and all responsibility for their use in whole or in part on any other site is hereby disclaimed by Flewelling & Moody.

CITY OF RIDGECREST

SGT. JOHN PINNEY MEMORIAL POOL REPLACEMENT PROJECT

205 S WARNER ST, RIDGECREST,CA 93555

FRAMING DETAILS

Job No. 3055-0100

Date 04-18-2025

S3.20

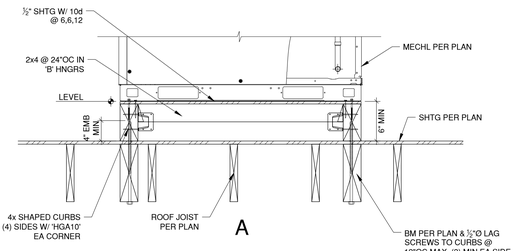

A

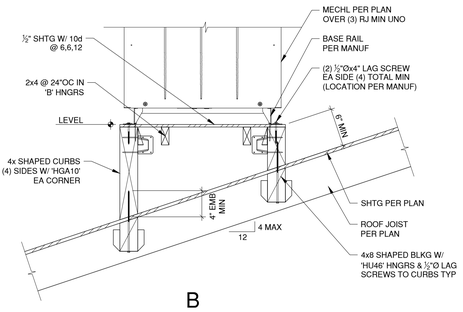

B

MECH ANCHORAGE DETAILS — SCALE:1"=1'-0" — 14

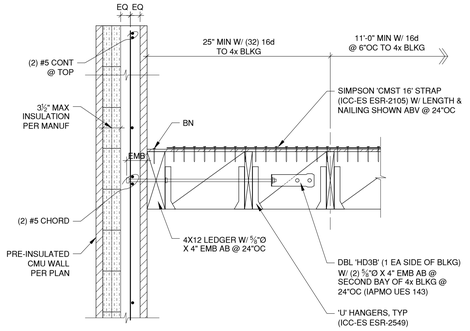

SECTION @ LEDGER — SCALE:1"=1'-0" — 15

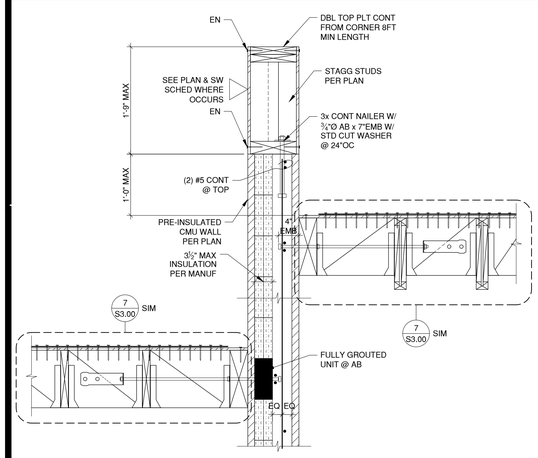

SECTION AT ROOF STEP — SCALE:1"=1'-0" — 16

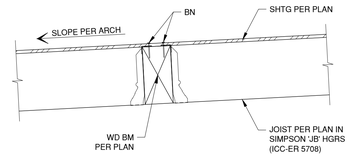

SECTION AT BM — SCALE:1"=1'-0" — 9

- — SCALE:1"=1'-0" — 10

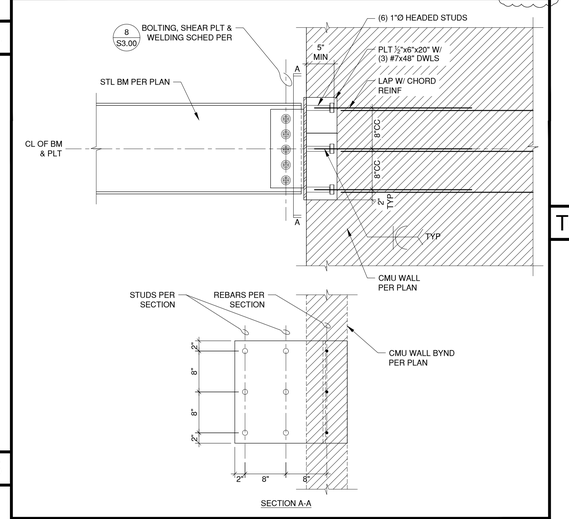

STRUT CONNECTION — SCALE:1"=1'-0" — 11

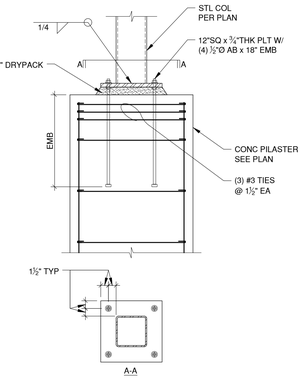

TOP OF PILASTER CONN — SCALE:1"=1'-0" — 12

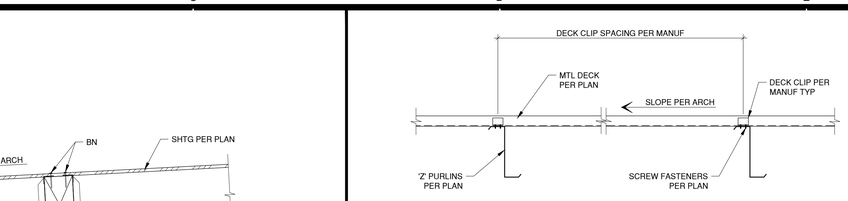

SECTION AT ROOF — SCALE:1"=1'-0" — 5

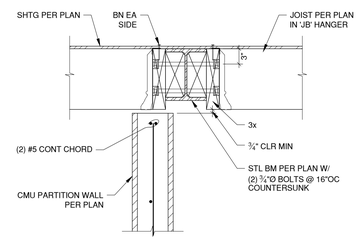

TOP OF CMU PARTITION WALL — SCALE:1"=1'-0" — 6

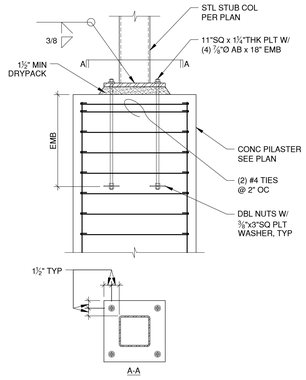

TOP OF PILASTER CONN — SCALE:1"=1'-0" — 7

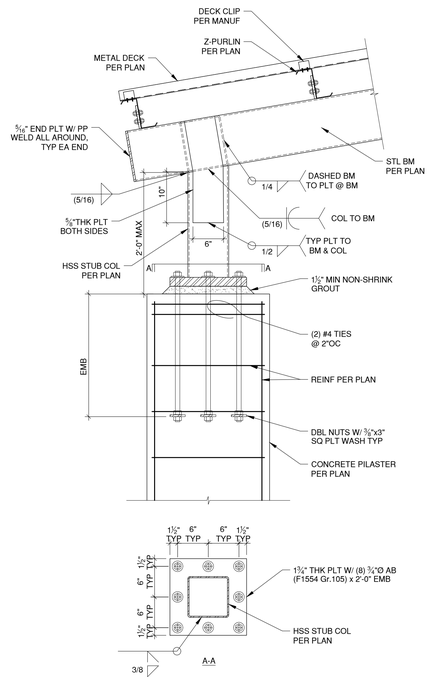

TOP OF PILASTER CONN — SCALE:1"=1'-0" — 8

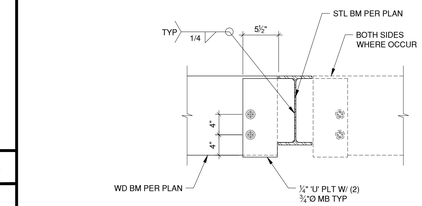

STL BM TO WOOD BM CONN — SCALE:1"=1'-0" — 1

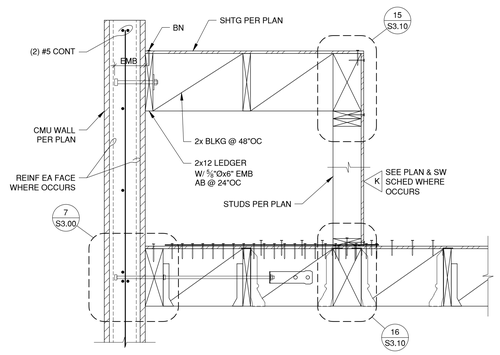

SECTION AT WALL — SCALE:1"=1'-0" — 2

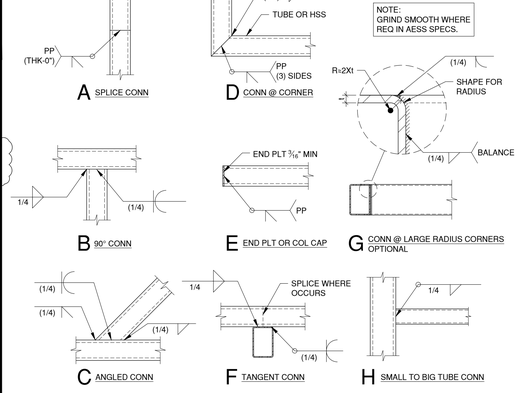

HSS BM TO BM CONN — SCALE:1"=1'-0" — 3

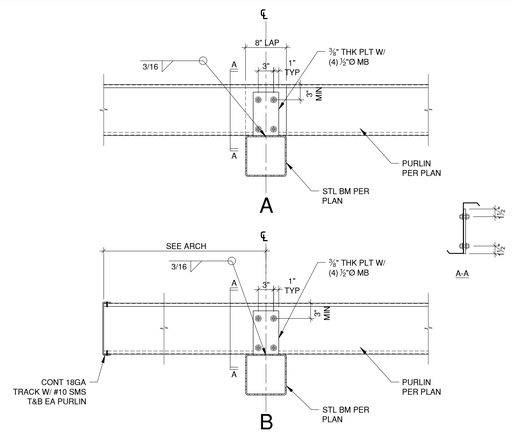

PURLIN AT GIRDER SECTION — SCALE:1"=1'-0" — 4

AGENCY

PTN_____ APPL_____

FLEWELLING & MOODY
architecture planning interiors

HEADQUARTERS OFFICE:
99 South Lake Avenue, Suite 300
Pasadena, CA 91101
Phone: 323.543.8300
E-Mail: fm-pasadena@flewelling-moody.com

ANTELOPE VALLEY OFFICE:
1035 West Lancaster Boulevard
Lancaster, California 93534
Phone: 661.949.0771
E-Mail: fm-lancaster@flewelling-moody.com

An Employee Owned Corporation

ARCHITECT

CONSULTANT

REGISTERED PROFESSIONAL ENGINEER JEFFREY SCOTT LONGLEY No.6430 STRUCTURAL STATE OF CALIFORNIA

RGSE inc.
Structural Engineers
2720 Cochran St. Suite 8B
Simi Valley, CA 93065
P: 805.522.3379
www.rgseinc.com
info@rgseinc.com

Drawn by: aaronc@rgseinc.com
Checked by: sokheanc@rgseinc.com

Revisions

No.	Date	Description
1	08/27/2025	BID ALT

All dimensions must be checked at the job by the contractor who accepts full responsibility for their accuracy under the contract. These plans & the specifications in connection therewith have been prepared for a specific site. Any and all responsibility for their use in whole or in part on any other site is hereby disclaimed by Flewelling & Moody.

CITY OF RIDGECREST

SGT. JOHN PINNEY MEMORIAL POOL REPLACEMENT PROJECT

205 S WARNER ST, RIDGECREST,CA 93555

ALTERNATE FRAMING DETAILS

Job No. 23195

Date 04-18-2025

S3.20A6

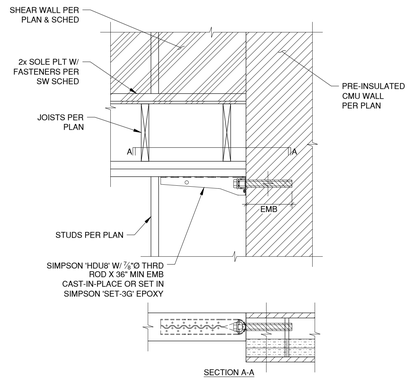

STRUT CONN

SCALE:1"=1'-0" | 13

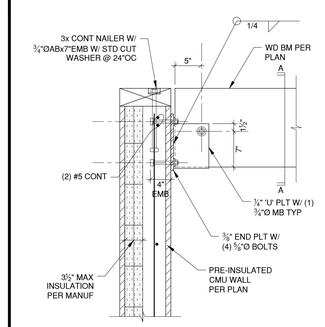

BM TO WALL CONN

SCALE:1"=1'-0" | 9

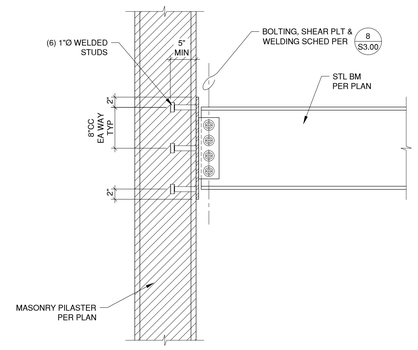

STL BM TO CMU COL CONN

SCALE:1"=1'-0" | 5

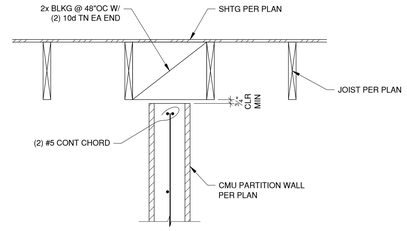

TOP OF CMU PARTITION WALL

SCALE:1"=1'-0" | 1

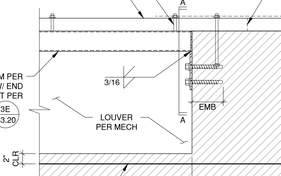

ROLL-UP DOOR ATTACHMENT

SCALE:1"=1'-0" | 14

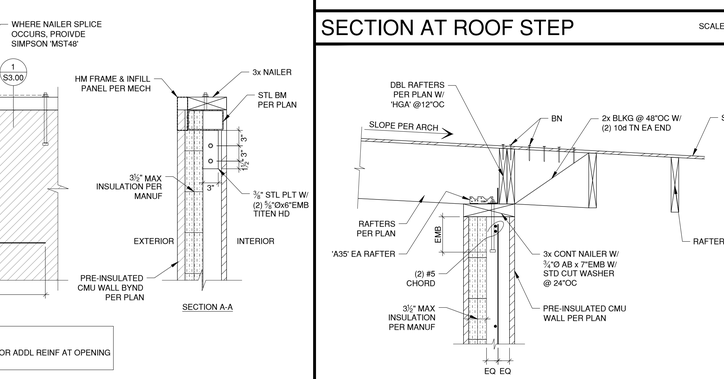

BM TO CMU WALL CONN

SCALE:1"=1'-0" | 10

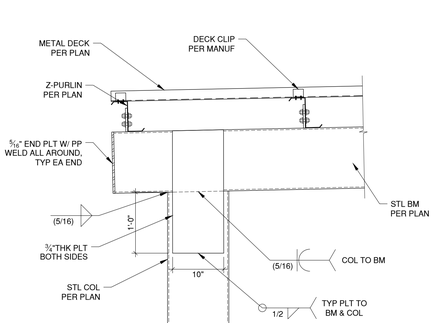

TOP OF STL COL CONN

SCALE:1"=1'-0" | 6

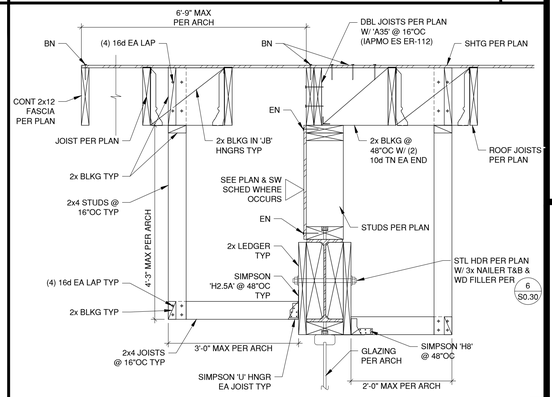

RAKE SECTION

SCALE:1"=1'-0" | 2

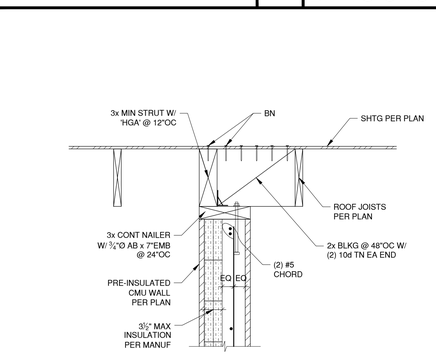

RAKE SECTION

SCALE:1"=1'-0" | 15

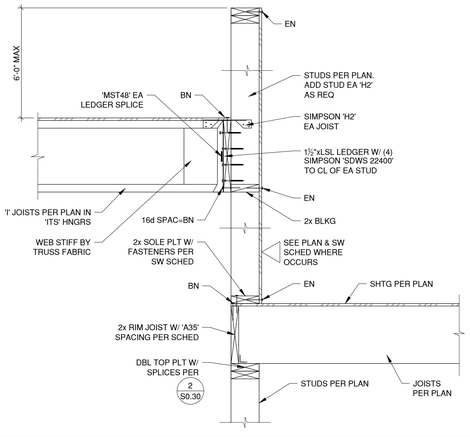

SECTION AT ROOF STEP

SCALE:1"=1'-0" | 11

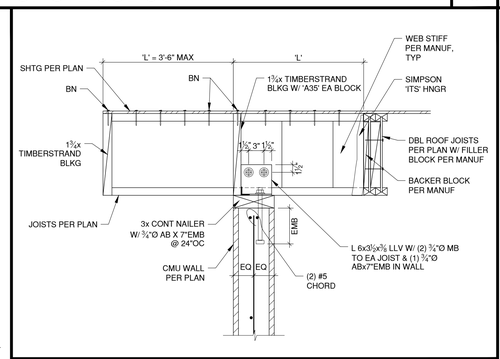

RAKE SECTION

SCALE:1"=1'-0" | 7

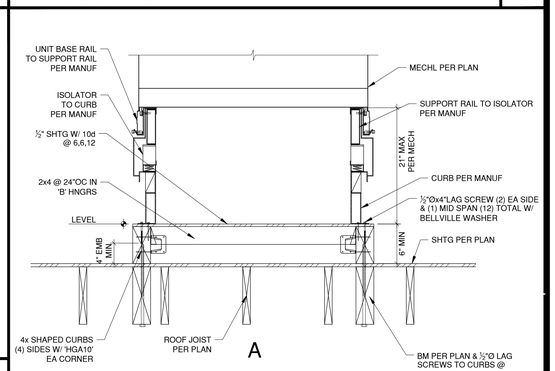

MECH ANCHORAGE DETAILS

SCALE:1"=1'-0" | 4

PARTIAL ELEVATION AT MECH LOUVER

SCALE:1"=1'-0" | 16

ROOF SECTION

SCALE:1"=1'-0" | 12

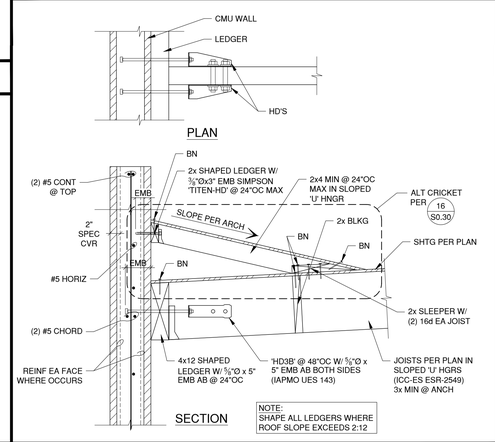

SECTION AT WALL

SCALE:1"=1'-0" | 8

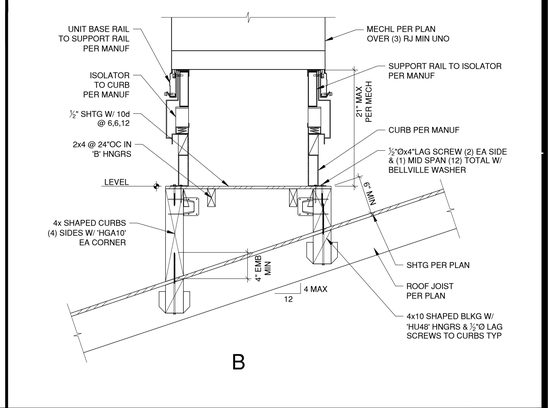

MECH ANCHORAGE DETAILS

SCALE:1"=1'-0" | 3

AGENCY

REVIEWED FOR CODE COMPLIANCE BY: WILLDAN ENGINEERING

Approval of these plans & specifications shall not be construed to be a permit for, or an approval of any violation of any Federal, State, County or City laws or ordinances. One set of approved plans must be kept on the job until completion.

10:05:04 AM Jul 21, 2025

PTN_____ APPL_____

FLEWELLING & MOODY
architecture planning interiors

HEADQUARTERS OFFICE:
99 South Lake Avenue, Suite 300
Pasadena, CA 91101
Phone: 323.543.8300
E-Mail: fm-pasadena@flewelling-moody.com

ANTELOPE VALLEY OFFICE:
1035 West Lancaster Boulevard
Lancaster, California 93534
Phone: 661.949.0771
E-Mail: fm-lancaster@flewelling-moody.com

An Employee Owned Corporation

ARCHITECT

CONSULTANT

REGISTERED PROFESSIONAL ENGINEER JEREMY SCOTT LUNDBERG No.6432 STRUCTURAL STATE OF CALIFORNIA

RGSE inc.
Structural Engineers
2720 Cochran St. Suite 8B
Simi Valley, CA 93065
P: 805.522.3379
www.rgseinc.com
info@rgseinc.com

Drawn by aaronc@rgseinc.com
Checked by sokheanc@rgseinc.com

Revisions

No.	Date	Description

All dimensions must be checked at the job by the contractor who accepts full responsibility for their accuracy under the contract. These plans & the specifications in connection therewith have been prepared for a specific site. Any and all responsibility for their use in whole or in part on any other site is hereby disclaimed by Flewelling & Moody.

CITY OF RIDGECREST

SGT. JOHN PINNEY MEMORIAL POOL REPLACEMENT PROJECT

205 S WARNER ST, RIDGECREST,CA 93555

FRAMING DETAILS

Job No. 3055-0100

Date 04-18-2025

S3.30

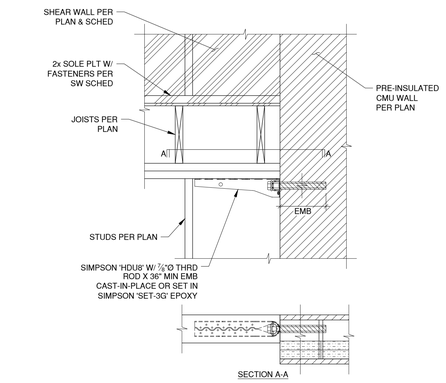

STRUT CONN

SCALE:1"=1'-0" | 13

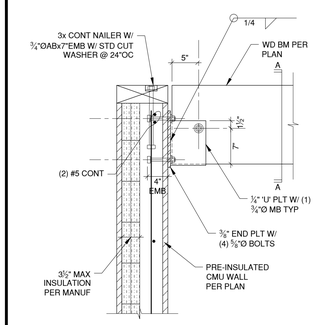

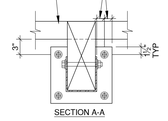

BM TO WALL CONN

SCALE:1"=1'-0" | 9

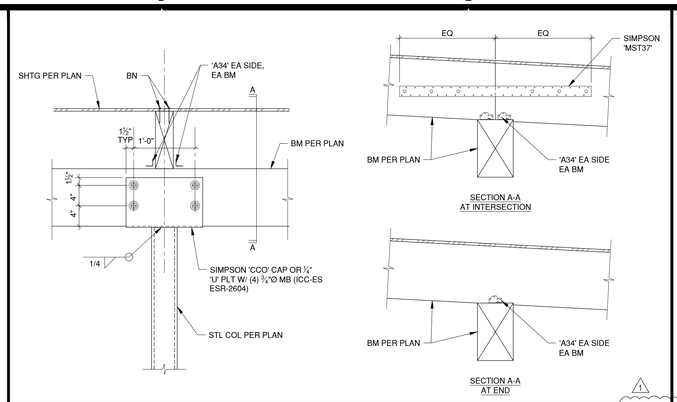

COL AT BM

SCALE:1"=1'-0" | 5

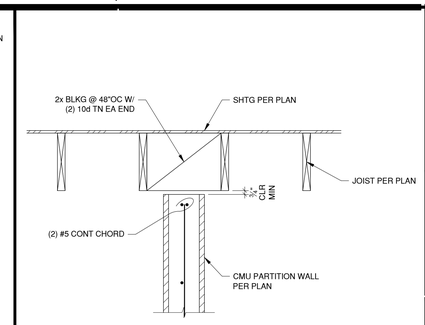

TOP OF CMU PARTITION WALL

SCALE:1"=1'-0" | 1

ROLL-UP DOOR ATTACHMENT

SCALE:1"=1'-0" | 14

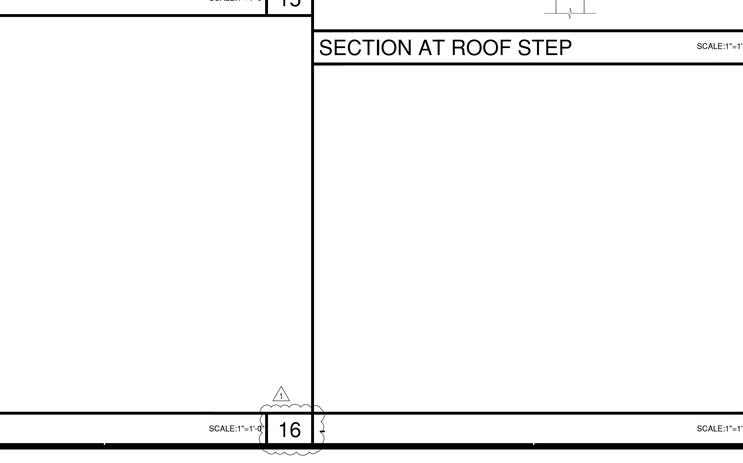

BM TO CMU WALL CONN

SCALE:1"=1'-0" | 10

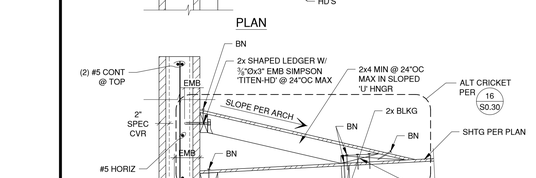

TOP OF STL COL CONN

SCALE:1"=1'-0" | 6

-

SCALE:1"=1'-0" | 2

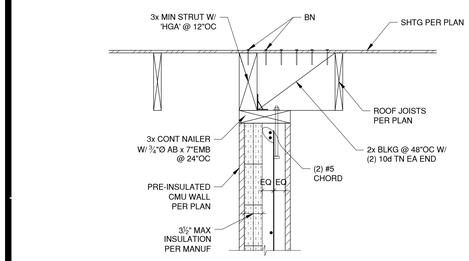

RAKE SECTION

SCALE:1"=1'-0" | 15

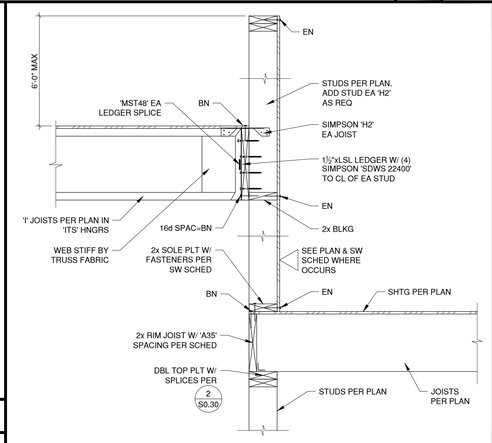

SECTION AT ROOF STEP

SCALE:1"=1'-0" | 11

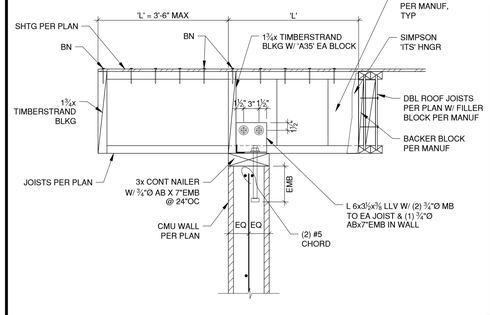

RAKE SECTION

SCALE:1"=1'-0" | 7

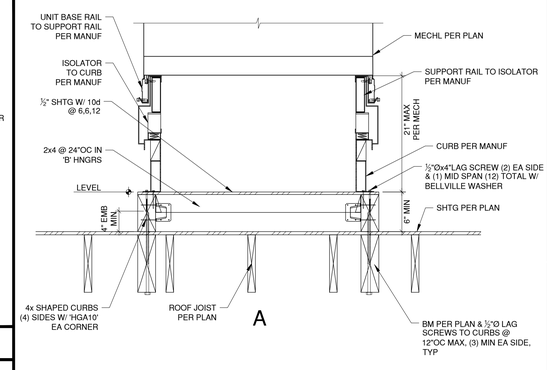

SECTION AT WALL

SCALE:1"=1'-0" | 8

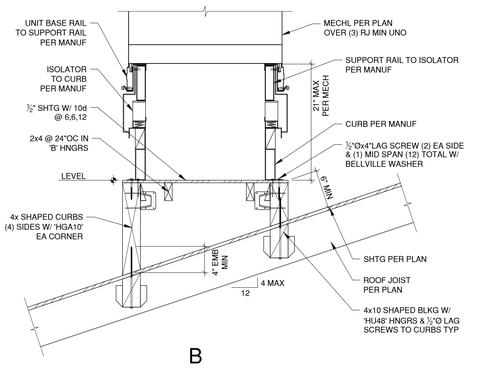

MECH ANCHORAGE DETAILS

SCALE:1"=1'-0" | 4

AGENCY

PTN. APPL.

FLEWELLING & MOODY
architecture planning interiors

HEADQUARTERS OFFICE:
99 South Lake Avenue, Suite 300
Pasadena, CA 91101
Phone: 323.543.8300
E-Mail: fm-pasadena@flewelling-moody.com

ANTELOPE VALLEY OFFICE:
1035 West Lancaster Boulevard
Lancaster, California 93534
Phone: 661.949.0771
E-Mail: fm-lancaster@flewelling-moody.com

An Employee Owned Corporation

ARCHITECT

CONSULTANT

REGISTERED PROFESSIONAL ENGINEER JEFFREY SCOTT LONGSHORE No.6428 STRUCTURAL STATE OF CALIFORNIA

RGSE inc.
Structural Engineers
2720 Cochran St. Suite 8B
Simi Valley, CA 93065
P: 805.522.3379
www.rgseinc.com
info@rgseinc.com

Drawn by aaronc@rgseinc.com

Checked by sokheanc@rgseinc.com

Revisions

No.	Date	Description
1	08/27/2025	BID ALT

All dimensions must be checked at the job by the contractor who accepts full responsibility for their accuracy under the contract. These plans & the specifications in connection therewith have been prepared for a specific site. Any and all responsibility for their use in whole or in part on any other site is hereby disclaimed by Flewelling & Moody.

CITY OF RIDGECREST

SGT. JOHN PINNEY MEMORIAL POOL REPLACEMENT PROJECT

205 S WARNER ST, RIDGECREST,CA 93555

ALTERNATE FRAMING DETAILS

Job No. 23195

Date 04-18-2025

S3.30A6

GENERAL NOTES

1. 8-1/2x11 BOOK SPECIFICATIONS SHALL FORM PART OF THIS WORK.
2. ALL DUCTWORK AND CEILING PENETRATION SHALL BE COORDINATED WITH EXISTING STRUCTURAL JOISTS AND BEAMS. PROVIDE OFFSETS IN PIPES AND DUCTS TO AVOID CUTTING OF BEAMS AND JOISTS UNLESS INDICATED ON STRUCTURAL DRAWINGS.
3. MAINTAIN CLEAR ACCESS TO SERVICE EQUIPMENT AND OTHER ACCESSORIES REQUIRING SERVICE, VISUAL INSPECTION OR HAND OPERATION. WHERE INDICATED OR REQUIRED, PROVIDE ACCESS PANELS OF THE TYPE SELECTED TO SUIT MATERIALS IN WHICH INSTALLED.
4. ALL WORK SHALL BE DONE IN ACCORDANCE WITH LATEST APPLICABLE CODES AND REGULATIONS PER CALIFORNIA AND OTHER AUTHORITIES HAVING JURISDICTION.
5. THE MECHANICAL DRAWINGS ARE DIAGRAMMATIC AND SHOULD NOT BE SCALED EXISTING CONDITIONS AND MAKE ADJUSTMENTS TO DIMENSIONS AS NECESSARY TO COMPLETE THE WORK.
6. CONTRACTOR SHALL OBTAIN ALL NECESSARY PERMITS AND SHALL ARRANGE FOR ALL INSPECTIONS AS REQUIRED.
7. CONTRACTOR SHALL THOROUGHLY EXAMINE PREMISES AND OBSERVE ALL CONDITIONS AND CIRCUMSTANCES UNDER WHICH THE WORK SHALL BE PERFORMED. NO ALLOWANCES WILL BE MADE FOR ERRORS OR NEGLIGENCE IN THIS RESPECT.
8. THE CONTRACTOR'S ATTENTION IS DIRECTED TO THE IMPORTANCE OF PROPER SCHEDULING AND PHASING OF THE WORK SO AS TO CAUSE MINIMUM DISTURBANCE TO THE ACTIVITIES IN THE OTHER FLOORS AND AREAS WHICH REMAIN OCCUPIED THROUGHOUT THE DURATION OF THE CONTRACT. THE CONTRACTOR'S WORK SCHEDULE SHALL BE SUBMITTED TO AND APPROVED BY OWNER.
9. CONTRACTOR SHALL PERFORM WORK ONLY AFTER THE GATHERING OF EXACT FIELD DIMENSIONS OF THE BUILDING STRUCTURE AND CEILINGS ETC. WHICH MAY AFFECT THE INSTALLATION OF THE NEW SYSTEMS.
10. OTHER CONTRACTOR SHALL FULLY COORDINATE ALL WORK WITH OTHER TRADES TO ASSURE ALL WORK CAN BE PROPERLY ISTALLED WITHOUT INTERFERENCE OR DELAY.
11. CLEAN UP ALL WASTE AND DEBRIS AT THE END OF EACH WORKING DAY AND AT THE COMPLETE OF THE JOB.
12. PRIOR TO STARTING WORK, SUBMIT SHOP DRAWINGS FOR ALL MECHANICAL EQUIPMENT & DUCTWORK PER SPECIFICATIONS.
13. EXACT LOCATIONS OF ALL CEILING DIFFUSERS, REGISTERS, AND GRILLES SHALL BE COORDINATED WITH LIGHTING. CEILING DIFFUSERS SHALL HAVE A MINIMUM OF 36" FROM ANY FIRE ALARM DEVICES.
14. CONTRACTOR SHALL MOUNT AND CONNECT EACH ITEM OF EQUIPMENT IN STRICT ACCORDANCE WITH MANUFACTURER'S RECOMMENDATION, CMC CHAPTER 6 AND CBC SECTION 1632A.
15. ALL OPENINGS IN WALLS, CEILINGS, AND FLOORS RESULTING FROM DUCT DEMOLITION SHALL BE CLOSED AND FINISHED TO MATCH THE SURROUNDING.
16. COORDINATE WITH PLUMBING TO PROVIDE CONDENSATE DRAIN LINES FOR ALL COOLING COILS.
17. ALL SUPPLY,RETURN AND OSA DUCTWORK SHALL BE INSULATED PER TITLE-24 REQUIREMENT.
18. PROVIDE VOLUME DAMPERS AT EACH BRANCH TAKE-OFF FROM MAIN SUPPLY, RETURN AND EXHAUST DUCT SERVING EACH AIR DEVICE.
19. PROVIDE DIFFUSERS AND GRILLES WITH BLOW PATTERNS INDICATED ON THE DRAWING.
20. DUCT SYSTEMS USED WITH BLOWER TYPE EQUIPMENT WHICH ARE PORTIONS OF A HEATING, COOLING, OR OUTDOOR AIR VENTILATION SYSTEM SHALL BE SIZED IN ACCORDANCE WITH CHAPTER 17 OF THE CALIFORNIA MECHANICAL CODE.
21. ALL EQUIPMENT WITH MOVING PARTS SHALL BE PROVIDED WITH FLEXIBLE DUCT AND PIPE CONNECTIONS.
22. CONTRACTOR SHALL VERIFY ALL CLEARANCES AND AVAILABLE SPACE FOR DUCTWORK PRIOR TO ORDERING AND/OR FABRICATING MATERIAL.
23. EXACT LOCATIONS OF ALL CEILING DIFFUSERS, REGISTERS, AND GRILLES SHALL BE COORDINATED WITH LIGHTING. DRAWINGS SHALL BE USED ONLY FOR GENERAL DUCT ROUTING AND AIR DISTRIBUTION. ACCESS DOORS SHALL BE PROVIDED ON ALL FIRE DAMPERS, AUTOMATIC DAMPERS, MANUAL DAMPERS, AND BYPASS DAMPERS.
24. NOTE THE CRITICAL SPACE AVAILABLE ABOVE CEILINGS. PROVIDE TRANSITION PIECES AT CROSSOVERS, UNDER BEAMS, OVER/UNDER PIPES, AS REQUIRE ACCOMMODATE DUCTS WITHIN SPACE AVAILABLE, PROVIDING EQUIVALENT DUCT SIZE TO THE DIMENSION SHOWN. COORDINATE CLOSELY WITH OTHER SECTIONS TO REDUCE NECESSITY OF TRANSITIONS TO A MINIMUM. NO ADDITIONAL COSTS WILL BE PAID FOR ANY REQUIRED TRANSITIONS OR OTHER SPECIAL CHANGE SHAPE PIECES.
25. UPON COMPLETION OF WORK, THE CONTRACTOR SHALL HAVE ALL AIR SYSTEMS BALANCED TO INDICATED AIR FLOW QUANTITIES BY A CERTIFIED AABC BALANCING CONTRACTOR. PROVIDE POST-CONSTRUCTION AIR BALANCE REPORT. IN ADDITION TO TESTING AND ADJUSTING, BEFORE A NEW SPACE-CONDITIONING SYSTEM SERVING A BUILDING OR SPACE IS OPERATED FOR NORMAL USE, BALANCE THE SYSTEM IN ACCORDANCE WITH THE PROCEDURES DEFINED BY THE TESTING ADJUSTING AND BALANCING BUREAU NATIONAL STANDARDS: ASSOCIATED AIR BALANCED COUNCIL NATIONAL STANDARDS OR AS APPROVED BY THE ENFORCING AGENCY.
26. MAXIMUM LENGTH OF RUN OF FLEXIBLE DUCT SHALL NOT EXCEED 5'-0" FEET.
27. REPAIR CEILING AND WALL SURFACES AFTER INSTALLATION AND INSPECTION OF NEW MECHANICAL DUCTWORK, FANS, ETC. ARE INSTALLED.
28. CONTRACTOR SHALL PROVIDE "YOUNG" REGULATORS IN LIEU OF VOLUME DAMPERS IN HARD CEILING AREAS AT EACH BRANCH TAKE-OFF FROM MAIN SUPPLY, RETURN AND EXHAUST DUCT SERVING EACH AIR DEVICE. ALL MANUAL VOLUME DAMPERS MAY NOT BE SHOWN ON PLANS. PROVIDE AS STATED.
29. THE SEISMIC ANCHORAGE OF MECHANICAL AND ELECTRICAL EQUIPMENT SHALL CONFORM TO C.C.R TITLE 24, OF SECTION 16 AND 16A CBC-2022 AND ASCE 7-10. A COPY OF THE GUIDELINES PUBLISHED BY SMACNA SHALL BE PROVIDED BY THE CONTRACTOR AND KEPT ON THE JOB SITE AT ALL TIMES.
30. ANY EQUIPMENT, DUCTWORK, OR PIPING INSTALLED MORE THAN 1 FT FROM THE LOCATION SHOWN ON THE DRAWINGS SHALL BE CLEARLY DOCUMENTED ON THE FIELD. CONTRACTOR SHALL PROVIDE AS-BUILT DRAWINGS THAT CLEARLY SHOW THE LOCATION OF THE EQUIPMENT BEFORE THAN COMPLETION OF THE PROJECT. ALL EXPENSE RELATING TO VERIFY THE AS-BUILT DRAWINGS BY THE DISTRICT OR ITS REPRESENTATIVE(S) DUE TO INACCURATE OR INCOMPLETE RECORD SHALL BE BORN BY THE CONTRACTOR.
31. CONTRACTOR HAS THE OPTION TO CHANGE DUCT TO ROUND AS LONG AS INTERIOR ASPECT RATIO IS MAINTAINED, AND SPACE ALLOWS.
32. RECORD PLANS “AS-BUILT” - THROUGHOUT CONSTRUCTION, THE CONTRACTOR SHALL MAINTAIN A CLEAN, UNDAMAGED SET OF PRINTS OF DRAWINGS AND SHOP DRAWINGS ON SITE. RED LINE THE SET TO SHOW THE ACTUAL INSTALLATION WHERE THE INSTALLATION VARIES SUBSTANTIALLY FROM THE WORK AS ORIGINALLY SHOWN. FOR CLOSE OUT, THE CONTRACTOR SHALL INCORPORATE THE CHANGES IN AUTOCAD FORMAT INTO THE APPROPRIATE ORIGINAL DRAWINGS. SIMPLE ATTACHMENTS SUCH AS REFERENCING CHANGE ORDERS, SHOP DRAWINGS, RFC'S OR RFI'S ARE NOT ACCEPTABLE.
33. DURING TESTING AND BALANCING, DUCT LEAKAGE SHALL NOT EXCEED 5% PER 2022 CALIFORNIA ENERGY CODE.
34. FLEXIBLE AIR DUCTWORK:

    i) FLEXIBLE AIR DUCTS AND CONNECTORS SHALL COMPLY WITH UL 181, AND SHALL BE INSTALLED IN ACCORDANCE WITH THE MANUFACTURER'S INSTALLATION INSTRUCTIONS AND SMACNA HVAC DUCT CONSTRUCTION STANDARDS - METAL AND FLEXIBLE.

    ii) FLEXIBLE AIR DUCTS SHALL NOT PENETRATE A FIRE-RESISTANCE-RATED ASSEMBLY OR CONSTRUCTION.

    iii) FLEXIBLE AIR CONNECTOR LENGTHS SHALL BE NOT MORE THAN 5 FEET AND SHALL NOT PENETRATE A WALL, FLOOR, OR CEILING. THE TEMPERATURE OF THE AIR TO BE CONVEYED IN A FLEXIBLE AIR DUCT OR CONNECTOR SHALL NOT EXCEED 250°F. CMC SECTION 603.5.
35. DUCT SUPPORT - METAL DUCTS

    i) DUCT SHALL BE SUPPORTED AT EACH CHANGE OF DIRECTION AND IN ACCORDANCE WITH SMACNA HVAC DUCT CONSTRUCTION STANDARDS - METAL AND FLEXIBLE. CMC SECTION 603.3

    ii) DUCTS, RISER : RISE DUCT SHALL BE HELD IN PLACE BY MEANS OF METAL STRAPS OR ANGLES AND CHANNELS TO SECURE THE RISER TO STRUCTURE. CMC SECTION 603.3.

    iii) RECTANGULAR DUCTS - SUPPORTS FOR THE RECTANGULAR SHALL BE INSTALLED ON TWO OPPOSITE SIDES OF EACH DUCT AND SHALL BE RIVETED, BOLTED, OR METAL SCREWED TO EACH SIDE OF THE DUCT AT INTERVALS SPECIFIED. CMC SECTION 603.3.1

    iv) HORIZONTAL ROUND DUCTS - HORIZONTAL ROUND DUCT NOT MORE THAN 40 INCHES IN DIAMETER WHERE SUSPENDED FROM ABOVE SHALL BE SUPPORTED WITH ONE HANGER PER INTERVAL AND IN ACCORDANCE WITH SECTION 603.3.2.1 THROUGH SECTION 603.3.2.3. CMC SECTION 603.3.2

    v) DUCT SUPPORT - METAL DUCT: HORIZONTAL DUCT SHALL HAVE A SUPPORT WITH 2 FT. OF EACH ELBOW AND WITH 4 FT. OF EACH BRANCH INTERSECTION. SMACNA HVAC DUCT CONSTRUCTION STANDARDS - METAL AND FLEXIBLE . CHAPTER 5.1.1

    vi) DUCT-SUPPORT-HORIZONTAL ROUND DUCTS - DUCT BANDING - DUCT SHALL BE EQUIPPED WITH TIGHT-FITTING CIRCULAR BANDS EXTENDING AROUND THE ENTIRE PERIMETER OF THE DUCT AT EACH SPECIFIED SUPPORT INTERVAL. CMC SECTION 603.2.1

    vii) DUCT SUPPORT - HORIZONTAL ROUND DUCTS - SIZE OF CIRCULAR BANDS: CIRCULAR BANDS SHALL NOT BE LESS THAN 1 INCH WIDE NOR LESS THAN EQUIVALENT TO THE GAUGE OF THE DUCT MATERIAL IT SUPPORTS. CMC SECTOIN 603.3.2.2.
36. ALL THE DUCTWORK AND AIR DISTRIBUTION IN THE SHOWER ROOMS ARE OF ALUMINIUM.
37. THE INSTALLED DUCTWORK SHALL BE LEAK TESTED IN ACCORDANCE WITH THE SMACNA HAVC AIR DUCT LEAKAGE TEST MANUAL PER CMC 603.10.1.
38. DUCTS, PLENUMS, OR FITTINGS CONSTRUCTION SHALL COMPLY WITH SMACNA DUCT CONSTRUCTION STANDARDS - METAL AND FLEXIBLE. SEC 602.3.
39. THE MATERIALS EXPOSED WITHIN DUCTS OR PLENUMS SHALL BE NONCOMBUSTIBLE OR SHALL HAVE A FLAME SPREAD INDEX NOT TO EXCEED TWENTY-FIVE (25) AND A SMOKE-DEVELOPED INDEX NOT TO EXCEED FIFTY (50) WHEN TESTED AS A COMPOSITE PRODUCT IN ACCORDANCE WITH ASTM E84 OR UL 723. SEC 602.2.
40. ALL APPLIANCES DESIGNED TO BE FIXED IN POSITION SHALL BE SECURELY FASTENED IN PLACE IN ACCORDANCE WITH MANUFACTURER INSTALLATION REQUIREMENTS AND THE BUILDING CODE. SEC 303.4.
41. AIR CONDITIONING REFRIGERANT CIRCUIT ACCESS PORTS LOCATED OUTDOORS SHALL BE PROTECTED FROM UNAUTHORIZED ACCESS. SEC 1105.11.
42. ALL APPLIANCE AND PLUMBING VENTS SHALL BE AT LEAST TEN (10) FEET IN A HORIZONTAL DIRECTION, OR THREE (3) FEET ABOVE THE OUTSIDE-AIR INTAKES FOR HVAC UNITS. SEC 802.6.1.6.
43. THE HEATING, VENTILATING, AND AIR-CONDITIONING SYSTEMS (INCLUDING HYDRONIC SYSTEMS) SHALL BE BALANCED IN ACCORDANCE WITH AN APPROVED METHOD PER SECTION 314.1 OF THE CALIFORNIA MECHANICAL CODE.
44. OUTDOOR AIR INTAKE OPENINGS SHALL BE COVERED WITH A SCREEN HAVING NOT LESS THAN 1/4-INCH OPENINGS AND NOT MORE THAN ½-INCH OPENINGS. SEC 402.4.
45. EXHAUST AIR OPENINGS SHALL BE COVERED WITH A SCREEN HAVING NOT LESS THAN 1/4-INCH OPENINGS AND NOT MORE THAN ½-INCH OPENINGS. SEC 502.1.
46. REFRIGERANT PIPING CROSSING AN OPEN SPACE SHALL COMPLY WITH CMC 1109.4.
47. REFRIGERANT PIPING AND JOINTS ERECTED ON THE PREMISES SHALL BE EXPOSED TO VIEW FOR VISUAL INSPECTION PRIOR TO BEING COVERED OR ENCLOSED. SEC 1109.8.
48. PIPING, FITTINGS THAT CONVEY REFRIGERANT THAT DURING NORMAL OPERATION ARE CAPABLE OF REACHING A SURFACE TEMPERATURE BELOW THE DEW POINT OF THE SURROUNDING AIR AND THAT ARE LOCATED IN SPACES OR AREAS WHERE CONDENSATION WILL CAUSE A HAZARD TO THE BUILDING OCCUPANTS, OR DAMAGE TO THE STRUCTURE, ELECTRICAL OR OTHER EQUIPMENT SHALL BE PROTECTED TO PREVENT SUCH DAMAGE. SEC 1109.9.
49. PROVIDE BACK-DRAFT DAMPER IN OUTSIDE AIR INTAKE, EXHAUST AIR AND RELIEF AIR DUCTWORK.
50. ALL THE OUTSIDE AIR AND EXHAUST AIR OPENING SHALL BE PROVIDED WITH BACK-DRAFT DAMPER.

ADMINISTRATIVE REQUIREMENTS

A. THE PERSON WITH OVERALL RESPONSIBILITY FOR CONSTRUCTION OR THE PERSON RESPONSIBLE FO THE INSTALLATION OF REGULATED FEATURES, MATERIALS, COMPONENTS, OR MANUFACTURED DEVICES SHALL POST, OR MAKE AVAILABLE WITH BUILDING PERMIT(S) ISSUED FOR THE BUILDING, THE REQUIRED INSTALLATION CERTIFICATED(S) FOR FEATURES, MATERIALS, COMPONENTS, OR MANUFACTURED DEVICES REGULATED BY THE APPLIANCE EFFICICANCY REGULATIONS OR PART 6. SUCH INSTALLATION CERTIFICATE(S) SHALL BE MADE AVAILABLE TO THE ENFORCEMENT AGENCY FOR ALL APPROPRIATE INSPECTIONS. THESE CERTIFICATES SHALL:

   i) IDENTIFY FEATURES, MATERIALS, COMPONENTS, OR MANUFACTURED DEVICES REQUIRED TO VERIFY COMPLIANCE WITH THE APPLIANCE EFFICIANCY REGULATIONS AND PART 6.
   ii) INCLUDE A STATEMENT INDICATING THAT THE FEATURES, MATERILAS, COMPONENTS, OR MANUFACTURED DEVICE CONFIRM TO THE APPLIANCES EFFICIANCY REFULATIONS AND PART 6 AND REQUIREMENTS FOR SUCH FEATURES, MATERIALS, COMPONENTS, OR MANUFACTURED DEVICES GIVEN IN THE PLANS AND SPECIFICATIONS APPROVED BY THE LOCAL ENFORCEMENT AGENCY.
   iii) STATE THE NUMBER OF THE BUILDING PERMIT UNDER WHICH THE CONSTRUCTION OR INSTALLON WAS PERFORMED. SEC 10-103 (a,b).

B. WITHIN 90 DAYS AFTER ISSUANCE OF CERTIFICATE OF OCCUPANCY RECORD DRAWINGS SHALL BE PROVIDED TO THE OWENER. IF A BUILDING DESIGN FEAURE, MATERIAL, COMPONENT OR MANUFACTURED DEVICE IS CHANGED BEFORE FINAL CONSTUCTRUCTION AND INSTALLATION, SUCH THAT THE BUILDING MAY NO LONGER COMPLY WITH PART 6, THE BUILDING MUST BE BROUGHT INTO COMPLIANCE, AND SO INDICATED ON AMENDED PLANS AND CERTIFICATE OF COMPLIANCE(S) THAT SHALL BE SUBMITTED FOR APPROVAL. SEC 10-103(a) 2B.

C. THE BUILDER SHALL PROVIDE THE BUILDING OWNER OR THE PERSON(S) REDSPONSIBLE FOR BUILDING MAINTENENCE (IN CASE OF MULTI-TENANT OR CENTRALLY OPERATED BUILDINGS) AT OCCUPANCY THE FOLLOWING:

   1) OPERATING INFORMATION : THE APPROPRIATE CERTIFICATE(S) OF COMPLIANCE AND A LIST OF THE FEATURES, MATERIALS, COMPONENTS, AND MECHANICAL DEVICES INSTALLED IN THE BUILDING AND INSTRUCTONS ON HOW TO OPERATE THEM EFFICIENTLY.
   2) MAINTENANCE INFORMATION : REQUIRED ROUTINE MAINTENANCE ACTIONS SHALL BE CLEARLY STATED AND INCORPORATED ON A READILY ACCESSIBLE LABEL. THE LABEL MAY BE LIMITED TO IDENTIFYING THE OPERATION AND MAINTENANACE MANUAL
   3) VENTILATION INFORMATION : A DESCRIPTION OF THE QUATITIES OF OUTDOOR AND RECIRCULATED AIR THAT THE VENTILATION SYSTEMS ARE DESIGNED TO PROVIDE TO EACH AREA. SEC 10-103(b) 2-4

CODES AND STANDARDS

CONSTRUCTION SHALL COMPLY WITH THE FOLLOWING PARTS OF TITLE 24, CALIFORNIA CODE OF REGULATIONS (CCR):

PART 1 2022 CALIFORNIA BUILDING STANDARDS ADMINISTRATIVE CODE
PART 2 2022 CALIFORNIA BUILDING CODE (CBC) VOLUME 1 AND 2
PART 3 2022 CALIFORNIA ELECTRICAL CODE (CEC)
PART 4 2022 CALIFORNIA MECHANICAL CODE (CMC)
PART 5 2022 CALIFORNIA PLUMBING CODE (CPC)
PART 6 2022 CALIFORNIA ENERGY CODE (CEC)
PART 7 CURRENTLY VACANT
PART 8 2022 CALIFORNIA HISTORICAL BUILDING CODE
PART 9 2022 CALIFORNIA FIRE CODE (CFC)
PART 10 2022 CALIFORNIA EXISTING BUILDING CODE
PART 11 2022 CALIFORNIA GREEN BUILDING STANDARDS CODE
PART 12 2022 CALIFORNIA REFERENCED STANDARDS

PARTIAL LIST OF APPLICABLE STANDARDS:

2022 CALIFORNIA BUILDING CODE (FOR SFM) REFERENCED STANDARDS CHAPTERS 35 AND 45.

NFPA 13, AUTOMATIC SPRINKLER SYSTEMS (CALIFORNIA AMENDED)	2022 EDITION
NFPA 14, STANDPIPE SYSTEMS (CALIFORNIA AMENDED)	2024 EDITION
NFPA 17, DRY CHEMICAL EXTINGUISHING SYSTEM	2024 EDITION
NFPA 17A, WET CHEMICAL SYSTEMS	2024 EDITION
NFPA 20, STATIONARY PUMPS	2022 EDITION
NFPA 24, PRIVATE FIRE MAINS (CALIFORNIA AMENDED)	2022 EDITION
NFPA 72, NATIONAL FIRE ALARM CODE (CALIFORNIA AMENDED)	2022 EDITION
(NOTE: SEE UL STANDARD 1971 FOR "VISUAL DEVICES")	
NFPA 80, FIRE DOOR AND OTHER OPENING PROTECTIVES	2022 EDITION
NFPA 253, CRITICAL RADIANT FLUX OF FLOOR COVERING SYSTEMS	2023 EDITION
NFPA 2001 CLEAN AGENT FIRE EXTINGUISHING SYSTEMS	2022 EDITION
REFERENCE CODE SECTION FOR NFPA STANDARDS-2001 CBC (SFM) 3504.1	

LIFE SAFETY CONTROL NOTES

1. COORDINATE WITH LIFE SAFETY CONTRACTOR FOR INTERCONNECTING ROOF AND CEILING, AND WALL MOUNTED MECHANICAL EQUIPMENT AS INDICATED ON EQUIPMENT SCHEDULE NOTES WITH THE BUILDING FIRE ALARM SYSTEM FOR SHUT DOWN UPON A SIGNAL FROM THE FIRE ALARM SYSTEM.

TITLE 24 MANDATORY NOTES

NOTE TO CONTRACTORS: THE NOTES BELOW ARE COMPOSITE AND NOT ALL NOTES MAY APPLY TO THIS PROJECT.

1. FOR HEATING EQUIPMENT EFFICIENCY SEE EQUIPMENT SCHEDULES, SEE SHEET 1-M-00.01.
2. FOR COOLING EQUIPMENT EFFICIENCY SEE EQUIPMENT SCHEDULES, SEE SHEET 1-M-00.01.
3. PROVIDE ALL AIR CONDITIONERS WITH HVAC THERMOSTATS PER 2019 CALIFORNIA ENERGY STANDARDS SECTION 110.2.
4. PROVIDE ALL HEAT PUMP SYSTEMS WITH HEAT PUMP THERMOSTATS PER 2022 CALIFORNIA ENERGY STANDARDS SECTION 110.2.
5. PROVIDE ALL GAS FURNACE SYSTEMS WITH STANDBY LOSS CONTROL PER 2022 CALIFORNIA ENERGY STANDARDS SECTION 110.2(d).
6. ALL AIR-HANDLING UNITS SHALL BE LOW-LEAKAGE TYPE PER 2022 CALIFORNIA ENERGY STANDARDS SECTION 110.2(f).
7. HEATING AND COOLING LOAD CALCULATIONS HAVE BEEN PERFORMED USING "COOL CALC MANUAL J®", "POWERED BY MANUAL J®" IN ACCORDANCE WITH 2022 CALIFORNIA ENERGY STANDARDS SECTION 150.0(b)1.C.
8. ALL AIR-DISTRIBUTION SYSTEM DUCTS AND PLENUMS SHALL BE INSTALLED, SEALED, AND INSULATED TO MEET THE REQUIREMENTS OF 2022 CALIFORNIA MECHANICAL CODE SECTIONS 601.0, 602.0, 603.0, 604.0, 605.0 AND "HVAC DUCT CONSTRUCTION STANDARDS METAL AND FLEXIBLE" AS PUBLISHED BY SMACNA.
9. MECHANICAL SYSTEMS THAT SUPPLY AIR TO AN OCCUPIABLE SPACE THROUGH DUCTWORK EXCEEDING 10'-0" IN LENGTH AND THROUGH A THERMAL CONDITIONING COMPONENT, EXCEPT EVAPORATIVE COOLERS, SHALL BE PROVIDED WITH AIR FILTER DEVICES IN ACCORDANCE WITH 2022 CALIFORNIA ENERGY CODE SECTION 150.0(m)12.
10. SPACE CONDITIONING SYSTEMS THAT UTILIZE FORCED AIR DUCTS TO SUPPLY COOLING TO AN OCCUPIABLE SPACE SHALL CONFORM TO THE REQUIREMENTS OF 2019 CALIFORNIA ENERGY CODE SECTION 150.0(m)13.

CALGREEN NOTES

NOTE TO CONTRACTORS: THE NOTES BELOW ARE COMPOSITE AND NOT ALL NOTES MAY APPLY TO THIS PROJECT.

1. DEVELOP A WRITTEN PLAN OF PROCEDURES FOR TESTING & ADJUSTING SYSTEMS. SYSTEMS TO BE INCLUDED FOR TESTING & ADJUSTING SHALL INCLUDE, AS APPLICABLE TO THE PROJECT:
   1.1. HVAC SYSTEM & CONTROLS
   1.2. INDOOR & OUTDOOR LIGHTING & CONTROLS
   1.3. WATER HEATING SYSTEMS
   1.4. RENEWABLE ENERGY SYSTEMS
   1.5. LANDSCAPE IRRIGATION SYSTEMS
   1.6. WATER REUSE SYSTEMS
2. PERFORM TESTING & ADJUSTING PROCEDURES IN ACCORDANCE WITH MANUFACTURER'S SPECIFICATIONS & APPLICABLE STANDARDS ON EACH SYSTEM.
3. BEFORE A NEW SPACE CONDITIONING SYSTEM SERVING A BUILDING OR SPACE IS OPERATED FOR NORMAL USE, THE SYSTEM SHOULD BE BALANCED IN ACCORDANCE WITH THE PROCEDURES DEFINED BY THE TESTING ADJUSTING AND BALANCING BUREAU NATIONAL STANDARDS, ETC.
4. AFTER COMPLETION OF TESTING, ADJUST, & BALANCING, PROVIDE A FINAL REPORT OF TESTING SIGNED BY THE INDIVIDUAL RESPONSIBLE FOR PERFORMING THESE SERVICES.
5. PROVIDE THE BUILDING OWNER OR REPRESENTATIVE WITH DETAILED OPERATING & MAINTENANCE INSTRUCTIONS & COPIES OF GUARANTEES / WARRANTIES FOR EACH SYSTEM.
6. INCLUDE A COPY OF ALL INSPECTION VERIFICATIONS AND REPORTS REQUIRED BY THE ENFORCING AGENCY.
7. THE PERMANENT HVAC SYSTEM SHALL ONLY BE USED DURING CONSTRUCTION IF NECESSARY TO CONDITION THE BUILDING WITHIN THE REQUIRED TEMPERATURE RANGE FOR MATERIAL AND EQUIPMENT INSTALLATION. IF THE HVAC SYSTEM IS USED DURING CONSTRUCTION, USE RETURN AIR FILTERS WITH A MINIMUM EFFICIENCY REPORTING VALUE (MERV) OF 8, BASED ON ASHRAE 52.2-1999, OR AN AVERAGE EFFICIENCY OF 30 PERCENT BASED ON ASHRAE 52.1-1992. REPLACE ALL FILTERS IMMEDIATELY PRIOR TO OCCUPANCY OR AT CONCLUSION OF CONSTRUCTION.
8. IN MECHANICALLY VENTILATED BUILDINGS, PROVIDE REGULARLY OCCUPIED AREAS OF THE BUILDING WITH AIR FILTRATION MEDIA FOR OUTSIDE AND RETURN AIR PRIOR TO OCCUPANCY THAT PROVIDES AT LEAST A MERV OF 8.
9. FOR BUILDINGS EQUIPPED WITH DEMAND CONTROL VENTILATION, CO2 SENSORS & VENTILATION CONTROLS SHALL BE SPECIFIED & INSTALLED IN ACCORDANCE WITH THE REQUIREMENTS OF THE CURRENT EDITION OF THE 2019 CALIFORNIA ENERGY CODE, SEC. 121(c).
10. INSTALLATION OF HVAC, REFRIGERATION, & FIRE SUPPRESSION EQUIPMENT SHALL COMPLY WITH SEC. 5.508.1.1 AND 5.508.1.1 AND 5.508.1.2 OF THE CURRENT CALIFORNIA GREEN BUILDING STANDARDS CODE.
11. INSTALL HVAC, REFRIGERATION, & FIRE SUPPRESSION EQUIPMENT THAT DO NOT CONTAIN CFC.
12. INSTALL HVAC, REFRIGERATION, & FIRE SUPPRESSION EQUIPMENT THAT DO NOT CONTAIN HALON.
13. AT THE TIME OF ROUGH INSTALLATION, OR DURING STORAGE ON THE CONSTRUCTION SITE AND UNTIL FINAL STARTUP OF THE HEATING, COOLING, AND VENTILATING EQUIPMENT, ALL DUCT AND OTHER RELATED AIR DISTRIBUTION COMPONENT OPENINGS SHALL BE COVERED WITH TAPE, PLASTIC, SHEET METAL, OR OTHER ACCEPTABLE METHODS TO REDUCE THE AMOUNT OR DUST, WATER, AND DEBRIS WHICH MAY ENTER THE SYSTEM. GREEN BUILDING CODE SEC 5.504.3.
14. PRIOR TO PERMIT BEING FINALED, A COMPLETE REPORT OF THE TESTING AND ADJUSTING SHALL BE PROVIDED TO THE OWNER OR OWNER'S REPRESENTATIVE AND FORM 5.410 – TESTING AND ADJUSTING SHALL BE COMPLETED AND PROVIDED TO THE INSPECTOR.

MECHANICAL SHEET INDEX

Sheet Number	Sheet Name
M0.01	MECHANICAL FRONT SHEET
M0.02	MECHANICAL SYMBOLS AND ABBREVIATIONS
M0.03	MECHANICAL SCHEDULES
1 M0.03A6	MECHANICAL SCHEDULES
M0.04	MECHANICAL SCHEDULES
1 M0.04A6	MECHANICAL SCHEDULES
M0.04A7	MECHANICAL SCHEDULES
M0.05	MECHANICAL SCHEDULES
1 M0.05A6	MECHANICAL SCHEDULES
M2.01	MECHANICAL COMMUNITY BUILDING FLOOR PLAN
1 M2.01A6	MECHANICAL COMMUNITY BUILDING FLOOR PLAN ALT 6
M2.02	MECHANICAL EQUIPMENT STORAGE FLOOR PLAN
M2.03	MECHANICAL COMMUNITY BUILDING ROOF PLAN
1 M2.03A6	MECHANICAL COMMUNITY BUILDING ROOF PLAN ALT 6
M2.03A7	MECHANICAL COMMUNITY BUILDING ROOF PLAN ALT 7
M2.04	MECHANICAL EQUIPMENT STORAGE ROOF PLAN
M6.01	MECHANICAL DETAILS
M6.02	MECHANICAL DETAILS
M6.03	MECHANICAL DETAILS
M6.04	MECHANICAL DETAILS
M6.05	MECHANICAL PIPING DIAGRAMS
1 M6.05A6	MECHANICAL PIPING DIAGRAMS
M6.06	MECHANICAL PIPING DIAGRAMS
M6.07	MECHANICAL WIRING DIAGRAMS
1 M6.07A6	MECHANICAL WIRING DIAGRAMS
M6.08	MECHANICAL WIRING DIAGRAMS
M7.01	MECHANICAL T-24 FORMS
1 M7.01A6	MECHANICAL T-24 FORMS
M7.02	MECHANICAL T-24 FORMS
1 M7.02A6	MECHANICAL T-24 FORMS
M7.03	MECHANICAL T-24 FORMS
M7.03A6	MECHANICAL T-24 FORMS

1

AGENCY

FLEWELLING & MOODY
architecture planning interiors

HEADQUARTERS OFFICE:
99 S. Lake Avenue, Suite 300
Pasadena, CA 91101
Phone: 323.543.8300
E-Mail: fm-pasadena@flewelling-moody.com

ANTELOPE VALLEY OFFICE:
1035 West Lancaster Bouldvard
Lancaster, California 93534
Phone: 661.949.0771
E-Mail: fm-lancaster@flewelling-moody.com

An Employee Owned Corporation

ARCHITECT

CONSULTANT

Budlong
An MBE|SBE|DBE|LSBE Firm
Glendale|Downtown LA|Fremont|Camarillo
W W W . B U D L O N G . C O M
Job No. 23-140

REGISTERED PROFESSIONAL ENGINEER — No. 29448 — EXP. 06-30-25 — CIVIL — STATE OF CALIFORNIA

Drawn by: Author
Check by: Checker

Revisions

No.	Date	Description
	01/26/24	100% DD
	03/01/24	50% CD
	05/09/24	90% CD
	08/05/24	100% CD
	11/25/24	100% CD V2
	01/31/25	100% CD V3
1	6/9/25	BID ALTERNATE

All dimensions must be checked at the job by the contractor who accepts full responsibility for their accuracy under the contract. These plans & the specifications in connection therewith have been prepared for a specific site. Any and all responsibility for their use in whole or in part on any other site is hereby disclaimed by Flewelling & Moody.

CITY OF RIDGECREST

SGT. JOHN PINNEY MEMORIAL POOL REPLACEMENT

205 S WARNER ST, RIDGECREST, CA 93555

Drawing Title

MECHANICAL FRONT SHEET

Job No. 3055-0000

Date 08/07/2024

Sheet No. **M0.01**

HVAC ABBREVIATIONS

ABBREVIATION	DESCRIPTION
AC	AIR CONDITIONING UNIT
AD	ACCESS DOOR
AFF	ABOVE FINISHED FLOOR
AH	AIR HANDLING
AP	ACCESS PANEL
BDD	BACK DRAFT DAMPER (WEIGHTED)
BT	BYPASS TIMER
BTU	BRITISH THERMAL UNITS PER HOUR
CC	COOLING COIL
CD	CEILING DIFFUSER
CFM	CUBIC FEET PER MINUTE
CLG	CEILING
CU	CONDENSING UNIT
CV	CONSTANT VOLUME, CONT., CONTINUES
CONT.	CONTINUES
CSFD	COMBINATION FIRE/SMOKE DAMPER
DAL	DISCHARGE AIR LOUVER DECIBELS
DB	DRY BULB TEMPERATURE
DDC	DIRECT DIGITAL CONTROL
DIA	DIAMETER
DN	DOWN
DTR	DOWN THROUGH ROOF
EA	EACH
EAT	ENTERING AIR TEMPERATUR
EF	EXHAUST FAN
EAL	EXHAUST AIR LOUVER
EAG	EXHAUST GRILLE
EFF	EFFICIENCY
EMS	ENERGY MANAGEMENT SYSTEM
ER	EXHAUST REGISTER
ESP	EXTERNAL STATIC PRESSURE
°F	DEGREES, FAHRENHEIT
FC	FLEX CONNECTION
FCU	FAN COIL UNIT
FD	FIRE DAMPER
FLR	FLOOR
FLA	FULL LOAD AMPS
FPM	FEET PER MINUTE
FT	FEET
FV	FACE VELOCITY
HZ	HERTZ
HPU	HEAT PUMP UNIT
HP	HORSE POWER
HW	HOT WATER
HWR	HOT WATER RETURN
HWS	HOT WATER SUPPLY
IN	INCHES
IN.W.C.	INCHES OF WATER COLUMN
IFM	INDOOR FAN MOTOR
LAT	LEAVING AIR TEMPERATURE
LBS	POUNDS
LBG	LINEAR BAR GRILLE
LRA	LOCKED ROTOR AMPS
LSD	LINEAR SLOT DIFFUSER
MAX	MAXIMUM
MBH	ONE THOUSAND BTUH
MCA	MINIMUM CIRCUIT AMPS
MCOP	MAXIMUM CIRCUIT AMPS
MD	MOTORIZED DAMPER
MIN	MINIMUM
MFS	MAXIMUM FUSE SIZE
MVD	MANUAL VOLUME DAMPER
N/A	NOT APPLICABLE
NC	NOISE CRITERIA
NIC	NOT IN CONTRACT
NK	NECK
NO	NUMBER
NTS	NOT TO SCALE
OFM	OUTDOOR FAN MOTOR
OSA	OUTSIDE AIR
OAI	OUTSIDE AIR INTAKE
OAL	OUTSIDE AIR LOUVER
OBD	OPPOSED BLADE DAMPER
RA	RETURN AIR
RAR	RETURN AIR REGISTER
RF	RETURN FAN
RAG	RETURN GRILLE
RH	HUMIDITY
RLA	RATED LOAD AMPS
RM	ROOM
RPM	REVOLUTIONS PER MINUTE
RR	RETURN REGISTER
SA	SUPPLY AIR
SAG	SUPPLY AIR GRILLE
SF	SUPPLY AIR FAN
SP	STATIC PRESSURE
SPEC	SPECIFICATIONS
SAR	SUPPLY AIR REGISTER
TD	TEMPERATURE DIFFERENCE
TEMP	TEMPERATURE
TSTAT	THERMOSTAT
TYP	TYPICAL
TSP	TOTAL STATIC PRESSURE
UH	UNIT HEATER
UNO	UNLESS NOTED OTHERWISE
UTR	UP THROUGH ROOF
V	VOLT
VENT	VENTILATION; VENT
VERT	VERTICAL
VTR	VENT THROUGH ROOF
W/	WITH
W	WATT
WBT	WET BULB TEMPERATURE
WMS	WIRE MESH SCREEN
ZD	ZONE DAMPER
(ETR)	EXISTING TO REMAIN
(E)	EXISTING
(N)	NEW
(R)	REMOVE
(RL)	RELOCATED
(RS)	REMOVE & SAVE FOR RELOCATION
(DCV)	DEMAND CONTROL VENTILATION (CO2)

DUCTWORK SYMBOLS

SUPPLY DUCT RISER IN PLAN

RETURN DUCT RISER IN PLAN

EXHAUST DUCT RISER

RECTANGULAR DUCTWORK (WIDTH X DEPTH)

RECTANGULAR DUCTWORK (WIDTH X DEPTH) — 10x8

ROUND DUCTWORK (SIZE, DIAMETER) — 8"∅

(L) 1" ACOUSTICALLY LINED DUCTWORK

(2DWL) 2" DOUBLE WALL ROOF MOUNTED

(1DWL) 1" DOUBLE WALL EXPOSED INTERIOR

SQUARE-THROATED ELBOW W/TURNING VANES

RADIUS ELBOW

RADIUS TEE — NK=

SQUARE-THROATED TEE — NK=

CHANGE IN ELEVATION WITH RELATION TO AIR FLOW — R/D

VOLUME DAMPER

TRANSITION WITH FLAT SIDE

TRANSITION ON CENTER

RECTANGULAR-TO-ROUND TRANSITION

TAKE-OFF TAP TO RECTANGULAR DUCT AND VOLUME DAMPER

CONICAL TAP TO RECTANGULAR DUCT AND VOLUME DAMPER

COMBINATION FIRE SMOKE DAMPER (CFSD) — CFSD

FIRE DAMPER (FD) — FD

FLEXIBLE CONNECTOR

EXISTING DUCTWORK TO REMAIN (DASHED)

NEW DUCTWORK (SOLID)

ACCESS REQUIRED FOR EQUIPMENT SERVICE

SIDE WALL REGISTER/GRILLE

RETURN GRILLE WITH ACOUSTICALLY LINED BOOT — AL

CEILING DIFFUSER 4-WAY THROW

CEILING DIFFUSER 3-WAY THROW

CEILING DIFFUSER 2-WAY THROW

CEILING DIFFUSER 2-WAY THROW

CEILING DIFFUSER 1-WAY THROW

RETURN AIR GRILLE

EXHAUST GRILLE

THERMOSTAT (MAX. 48" A.F.F.) — T

TEMPERATURE SENSOR (MAX. 48" A.F.F.) — TS

CO_2 SENSOR (MAX. 48" A.F.F.) — CO_2

BYPASS TIMER (MAX. 48" A.F.F.) — BT

MANUAL VOLUME DAMPER

EQUIPMENT TAG, DESCRIPTION FAU, ROOM NUMBER D80, UNIT NUMBER 1 — FAU / D80-1

DETAIL REFERENCE, DETAIL 1, SHEET NUMBER M-1 — 1 / M-1

DOOR LOUVER MIN. 12x12 — DL

DOOR UNDERCUT MAX. 1"

SECTION REFERENCE, SECTION 1 SHEET M-1 — 1 / M-1

EQUIPMENT REFERENCE, UNIT NUMBER AND SHEET NUMBER — EQUIP, TYPE / UNIT# / SHEET#

DUCT MOUNTED SMOKE DETECTOR — SD

DEMOLITION NOTE #1 — 1

CONSTRUCTION NOTE #1 — 1

ROOF MOUNTED DUCT SUPPORT

BACK DRAFT DAMPER — BD

AGENCY

REVIEWED FOR CODE COMPLIANCE BY: WILLDAN ENGINEERING

Approval of these plans & specifications shall not be construed to be a permit for, or an approval of any violation of any Federal, State, County or City laws or ordinances. One set of approved plans must be kept on the job until completion.

9:27:05 AM Jul 21, 2025

FLEWELLING & MOODY
architecture planning interiors

HEADQUARTERS OFFICE:
99 S. Lake Avenue, Suite 300
Pasadena, CA 91101
Phone: 323.543.8300
E-Mail: fm-pasadena@flewelling-moody.com

ANTELOPE VALLEY OFFICE:
1035 West Lancaster Bouldvard
Lancaster, California 93534
Phone: 661.949.0771
E-Mail: fm-lancaster@flewelling-moody.com

An Employee Owned Corporation

ARCHITECT

CONSULTANT

Budlong
An MBE|SBE|DBE|LSBE Firm
Glendale|Downtown LA|Fremont|Camarillo
W W W . B U D L O N G . C O M
Job No. 23-140

REGISTERED PROFESSIONAL ENGINEER — SUNIL PATEL — No. 29448 — EXP. 06-30-25 — STATE OF CALIFORNIA

Drawn by: Author

Check by: Checker

Revisions

No.	Date	Description
	01/26/24	100% DD
	03/01/24	50% CD
	05/09/24	90% CD
	08/05/24	100% CD
	11/25/24	100% CD V2
	01/31/25	100% CD V3

All dimensions must be checked at the job by the contractor who accepts full responsibility for their accuracy under the contract. These plans & the specifications in connection therewith have been prepared for a specific site. Any and all responsibility for their use in whole or in part on any other site is hereby disclaimed by Flewelling & Moody.

CITY OF RIDGECREST

SGT. JOHN PINNEY MEMORIAL POOL REPLACEMENT

205 S WARNER ST, RIDGECREST, CA 93555

Drawing Title

MECHANICAL SYMBOLS AND ABBREVIATIONS

Job No. 3055-0100

Date 08/07/2024

Sheet No. **M0.02**

VRF OUTDOOR UNIT SCHEDULE

SYMBOL	MANUFACTURER AND MODEL NO.	NO. OF MODULES	LOCATION	SERVING	CAPACITIES		ELECTRICAL							IEER	EER	COP @ 47° F	SEER	SEER2	HSPF2	REFRIGERANT	OPERATING WEIGHT (LBS)	MOUNTING	REMARKS
					COOLING (BTU/hr)	HEATING (BTU/hr)	COMPRESSOR		FAN KW	MCA	MOCP	POWER											
							QTY	KW				VOLTS	PHASE	Hz										
CU-1	TOSHIBA CARRIER MMY-MAP0966HT9P-UL	1	ROOF	SICK BAY, LIFE GUARD FACILITIES, ADMINISTRATION OFFICE	96000	108000	2	2 x 3.0	1	36	40	208/230	3	60	23.10	13.50	4.10	17.56	-	-	R-410A	684	3/M6.03	SEE BELOW NOTES
CU-2	TOSHIBA CARRIER MCY-MAP0607HS-UL	1	ROOF	COMMUNITY ROOM	60000	66000	1	3.75	0.10+0.10	36.3	40	208/230	1	60	-	-	-	-	18.40	9.40	R-410A	311	2/M6.02	SEE BELOW NOTES

NOTES:-

1. PROVIDE WITH ALL ACCESSORIES AND PERIPHERALS FOR A COMPLETE, WORKING INSTALLATION.
2. SEE VRF DIAGRAMS FOR PIPING AND WIRING DIAGRAMS.
3. MANUFACTURER SHALL PROVIDE ON-SITE STARTUP ASSISTANCE FOR A MINIMUM OF (2) WEEKS.
4. INSTALL OUTDOOR HEAT RECOVERY UNIT ON LEVEL EQUIPMENT PAD WITH VIBRATION ISOLATION.
5. COORDINATE ALL CONTROLS WITH CONTROLS CONTRACTOR PRIOR TO PURCHASING.
6. PROVIDE CONDENSATE DRAIN UNDER CU PER DETAIL.

VRF FAN COIL UNIT SCHEDULE

SYMBOL	MANUFACTURER AND MODEL NO.	OUTDOOR UNIT	TYPE	SERVING	FAN DATA				MIN. OSA (CFM)	CAPACITIES		ELECTRICAL					REFRIGERANT	OPERATING WEIGHT (LBS)	MOUNTING DETAIL	REMARKS
					MIN. CFM	MAX. CFM	ESP (") W.G.	MOTOR WATTS		COOLING (BTU/hr)	HEATING (BTU/hr)	MCA	MOCP	POWER						
														VOLTS	PHASE	Hz				
FCU-1	TOSHIBA CARRIER MMD-UP0721HP-UL	CU-1	DUCTED	FRONT DESK & LOBBY	1470	2235	1.0	1000	225	72000	81000	5.7	15	208/230	1	60	R-410A	218	8/M6.01	SEE BELOW NOTES
FCU-2	TOSHIBA CARRIER MMD-UP0071BHP-UL	CU-1	DUCTED	ADMINISTRATION OFFICE	212	318	0.6	150	20	7500	8500	0.91	15	208/230	1	60	R-410A	56	8/M6.01	SEE BELOW NOTES
FCU-3	TOSHIBA CARRIER MMD-UP0071BHP-UL	CU-1	DUCTED	SICK BAY	212	318	0.6	150	212	7500	8500	0.91	15	208/230	1	60	R-410A	56	8/M6.01	SEE BELOW NOTES
FCU-4	TOSHIBA CARRIER MMD-UP0121BHP-UL	CU-1	DUCTED	LIFE GUARD FACILITES, CORRIDOR	394	589	0.6	150	215	12000	13500	1.10	15	208/230	1	60	R-410A	73	8/M6.01	SEE BELOW NOTES
FCU-5	TOSHIBA CARRIER MMD-UP0301BHP-UL	CU-2	DUCTED	COMMUNITY ROOM	547	742	0.8	150	275	30000	34000	2.31	15	208/230	1	60	R-410A	93	8/M6.01	SEE BELOW NOTES AND WHEN CO_2 VALUE GOES ABOVE (1000 PPM) (ADJ.) THE OSA DAMPER OPENS MORE AND RA DAMPER RESPECTIVELY CLOSES. THE PRESSURE INSIDE THE SA DUCTWORK REMAINS CONSTANT.
FCU-6	TOSHIBA CARRIER MMD-UP0301BHP-UL	CU-2	DUCTED	COMMUNITY ROOM	547	742	0.8	150	275	30000	34000	2.31	15	208/230	1	60	R-410A	93	8/M6.01	SEE BELOW NOTES AND WHEN CO_2 VALUE GOES ABOVE (1000 PPM) (ADJ.) THE OSA DAMPER OPENS MORE AND RA DAMPER RESPECTIVELY CLOSES. THE PRESSURE INSIDE THE SA DUCTWORK REMAINS CONSTANT.

NOTES:-

1. PROVIDE SUCTION AND LIQUID REFRIGERANT LINES BETWEEN FAN COIL AND HEAT PUMP/CONDENSING UNIT. SIZE PER MANUFACTURER'S RECOMMENDATIONS.
2. SCHEDULED OPERATING WEIGHT INCLUDES ALL ACCESSORIES.
3. ALL SPLIT SYSTEMS SHALL USE R-410A REFRIGERANT.
4. COORDINATE ALL CONTROLS WITH CONTROLS CONTRACTOR PRIOR TO PURCHASING.
5. SEE VRF DIAGRAMS FOR PIPING AND WIRING DIAGRAMS.
6. PROVIDE CONDENSATE PUMP. REFER TO PLUMBING PLANS FOR CONDENSATE REMOVAL.
7. PROVIDE SECONDARY DRAIN PAN. SECONDARY CONDENSATE DRAIN (WATERTIGHT PAN) SHALL BE PROVIDED FOR COOLING COILS INSTALLED ABOVE THE CEILING OR IN FURRED SPACES. THE SECONDARY DRAIN SHALL TERMINATE IN A VISIBLE LOCATION.
8. PROVIDE CUSTOMIZED FILTER BOX WITH MERV-13 FILTER. THE FACE VELOCITY SHALL NOT EXCEED 250 FPM.
9. PROVIDE 10'-0" OF 1" DUCT LINING FOR EACH FAN COIL UNIT WITH SUPPLY AND RETURN AIR DUCTWORK.
10. PROVIDE COPPER - L TYPE REFRIGERANT PIPING WITH ALL PIPING INSTALLATION IN VRV SYSTEM.
11. PROVIDE SMOKE DETECTOR IN THE SUPPLY AIR DUCTWORK TO SHUT DOWN THE FAN COIL UNIT AND THE OUTSIDE AIR SUPPLY FAN UPON SENSING THE SMOKE.
12. PROVIDE WIRED THERMOSTAT SMMSe/SHRMe.
13. PROVIDE CO_2 SENSOR IN "COMMUNITY ROOM" IN ADDITION TO THERMOSTAT.

SPLIT DX FAN COIL UNIT SCHEDULE

INDOOR UNIT													OUTDOOR UNIT																
SYMBOL	MANUFACTURER AND MODEL NO.	TYPE	SERVING	FAN DATA		MIN. OSA (CFM)	CAPACITIES		ELECTRICAL			REFRIGERANT	OPERATING WEIGHT (LBS)	MOUNTING DETAIL	SYMBOL	MANUFACTURER AND MODEL NO.	LOCATION	TONS	ELECTRICAL						REFRIGERANT			OPERATING WEIGHT (LBS)	SEER/ EER	HSPF/ COP	SEER2/ EER2	HSPF2/ COP2	MOUNTING DETAIL	REMARKS
				MIN. CFM	MAX. CFM		COOLING (BTU/hr)	HEATING (BTU/hr)	MCA	POWER									MCA	MOCP	POWER			TYPE	LIQUID SIZE	SUCTION SIZE							
										VOLTS	PHASE	Hz									VOLTS	PHASE	Hz										
FCU-7	TOSHIBA CARRIER RAV-SM242CTP-UL	DUCTED	SERVICE KITCHEN, CONCESSIONS	510	775	230	24000	27000	-	INDOOR POWERED BY OUTDOOR		R-410A	71	8/M6.01	HP-1	TOSHIBA CARRIER RAV-SP242AT2P-UL	ROOF	2	17	25	208/230	1	60	R-410A	3/8	5/8	152	- / -	- / -	19.40 / 12.40	10.30 / 3.80	2/M6.02	SEE BELOW NOTES 1,2,3,4,5,6,7,8
FCU-8	CARRIER 40MAHBQ12XA3	HIGHWALL	MDF ROOM	176	382	-	12000	12000	0.3125	INDOOR POWERED BY OUTDOOR		R-410A	22.93	9/M6.01	HP-2	CARRIER 38MARBQ12AA3	ROOF	1	15	15	208/230	1	60	R-410A	1/4	1/2	79.37	25.5 / 14.0	13.0 / 3.81	- / -	- / -	2/M6.02	SEE BELOW NOTES 1,2,3,4,5,6,7,8
FCU-9	CARRIER 40MAHBQ12XA3	HIGHWALL	ELECTRICAL ROOM	176	382	-	12000	12000	0.3125	INDOOR POWERED BY OUTDOOR		R-410A	22.93	9/M6.01	HP-3	CARRIER 38MARBQ12AA3	ROOF	1	15	15	208/230	1	60	R-410A	1/4	1/2	79.37	25.5 / 14.0	13.0 / 3.81	- / -	- / -	2/M6.02	SEE BELOW NOTES 1,2,3,4,5,6,7,8,9

NOTES:-

1. INDOOR UNITS ARE POWERED BY THE OUTDOOR UNITS.
2. HEAT PUMP OR CONDENSING UNIT SHALL BE MOUNTED ON HOUSEKEEPING PAD.
3. PROVIDE SUCTION AND LIQUID REFRIGERANT LINES BETWEEN FAN COIL AND HEAT PUMP/CONDENSING UNIT. SIZE PER MANUFACTURER'S RECOMMENDATIONS.
4. SCHEDULED OPERATING WEIGHT INCLUDES ALL ACCESSORIES.
5. ALL SPLIT SYSTEMS SHALL USE R-410A REFRIGERANT.
6. PROVIDE REFCOGOBI CONDENSATE PUMP WITH HIGH-WALL UNIT.
7. PROVIDE CONDENSATE PUMP WITH DUCTED FAN COIL UNIT.
8. PROVIDE THERMOSTAT 43FX.
9. THE EXHAUST FAN AND VENTILATION ARE THE MAIN SOURCE OF THE HEAT REJECTION FROM THE ELECTRICAL ROOM. ONLY IN HOTTER OUTSIDE AIR TEMPERATURES WHEN VENTILATION IS NOT SUFFICIENT THEN THE AC UNIT SHALL PROVIDE ADDITIONAL COOLING. AC SET TEMPERATURE IS 90 DF (ADJUSTABLE).

SEQUENCE OF OPERATION FOR ELECTRICAL ROOM'S FCU:-

THE ROOM IS COOLED THROUGH AIR CIRCULATION BY EXHAUST FAN IN ELECTRICAL ROOM AS PRIMARY COOLING. HOWEVER THE AC SYSTEM IS A BACKUP COOLING SYSTEM FOR WHEN THE OUTSIDE TEMPERATURE AND ROOM TEMPERATURES ARE SO HIGH THAT THE EXHAUST FAN VENTILATION IS NO MORE SUFFICIENT AND THE AC UNIT NEEDS TO RUN TO PROVIDE COOLING IN THE ROOM. THE ROOM SHOULD BE PROVIDED BY (2) THERMOSTAT, ONE FOR EXHAUST FAN AND ONE FOR AC UNIT. THE EXHAUST FAN AND AC UNIT TO BE INTERLOCKED SO THAT WHEN AC IS RUNNING THE EXHAUST FAN IS TURNED OFF. THE THERMOSTAT FOR AC UNIT CAN BE SET FOR 85 DF (ADJUSTABLE +- 5) TO TURN ON THE UNIT AND SHUT DOWN THE EXHAUST FAN. ONCE THE ROOM TEMPERATURE IS BELOW 85 (3 DF) THE AC UNIT TURNS OFF AND EXHAUST FAN START WORKING.

DEDICATED OUTDOOR AIR SYSTEM SCHEDULE

SYMBOL	MANUFACTURER AND MODEL NO.	LOCATION	SERVING	CAPACITIES			FAN DATA		MOTOR HP	ELETRICAL					EER	IEER	COP	REFRIGERANT TYPE	TOTAL OPERATING WEIGHT (LBS.)	MOUNTING DETAIL	REMARKS
				COOLING (MBH)	TOTAL REHEAT CAPACITY (MBH)	ELEC. HEATING @ 47° F (MBH)	AIR FLOW			MCA	MOCP	SUPPLY FAN									
							CFM	ESP.				V	PH	HZ							
DOAS-1	iAIRE UPC-FC12MHT024M00A-FGLVY	ROOF	MEN'S LOCKER ROOM, MEN'S SHOWER ROOM WOMEN'S LOCKER ROOM, WOMEN'S SHOWER ROOM MEN'S REST ROOM, WOMEN'S REST ROOM	118.0	43.5	116.0	2000	0.5 (in w.g.)	2.4	115.6	125.0	208	3	60	11.0	15.0	3.4	R-410A	1219.0		SEE BELOW NOTES

NOTES:-

1. AUTOMATIC SHUT-OFF SHALL BE REQUIRED PER 2022 CALIFORNIA MECHANICAL CODE SECTION 605.8.
2. DEDICATED OUTDOOR AIR SYSTEM UNIT SHALL HAVE A SINGLE POINT ELECTRICAL CONNECTION. ALL WIRING AND CONDUIT INTERNAL TO THE UNIT FOR POWER & CONTROLS SHALL BE FACTORY PRE-WIRED.
3. DEDICATED OUTDOOR AIR SYSTEM UNIT SHALL HAVE FACTORY FILTER RACK WITH 2" PLEATED MERV 8 & 4" PLEATED MERV 13.
4. DEDICATED OUTDOOR AIR SYSTEM UNIT SUPPLY FANS SHALL BE EQUIPPED WITH VARIABLE FREQUENCY DRIVES (VFD'S) WHICH ARE INTERNALLY PROTECTED.
5. DISCHARGE DUCT MUST BE GASKETED AND SCREWED DIRECTLY TO THE DISCHARGE PANEL OF THE UNIT.
6. PROVIDE CONDENSATE REMOVAL ON THE ROOF.
7. PROVIDE THERMOSTAT 43FX.
8. PROVIDE WITH 18" TALL MICROMELT VIBRATION ISOLATION ROOFCURB.

AGENCY

REVIEWED FOR CODE COMPLIANCE BY: WILLDAN ENGINEERING

Approval of these plans & specifications shall not be construed to be a permit for, or an approval of any violation of any Federal, State, County or City laws or ordinances. One set of approved plans must be kept on the job until completion.

9:27:06 AM Jul 21, 2025

FLEWELLING & MOODY
architecture planning interiors

HEADQUARTERS OFFICE:
99 S. Lake Avenue, Suite 300
Pasadena, CA 91101
Phone: 323.543.8300
E-Mail: fm-pasadena@flewelling-moody.com

ANTELOPE VALLEY OFFICE:
1035 West Lancaster Bouldvard
Lancaster, California 93534
Phone: 661.949.0771
E-Mail: fm-lancaster@flewelling-moody.com

An Employee Owned Corporation

ARCHITECT

CONSULTANT

Budlong
An MBE|SBE|DBE|LSBE Firm
Glendale|Downtown LA|Fremont|Camarillo
W W W . B U D L O N G . C O M
Job No. 23-140

REGISTERED PROFESSIONAL ENGINEER — CHRISTOPHER PATRICK — No. 29448 — EXP. 06-30-25 — CIVIL — STATE OF CALIFORNIA

Drawn by: Author

Check by: Checker

Revisions

No.	Date	Description
	01/26/24	100% DD
	03/01/24	50% CD
	05/09/24	90% CD
	08/05/24	100% CD
	11/25/24	100% CD V2
	01/31/25	100% CD V3

All dimensions must be checked at the job by the contractor who accepts full responsibility for their accuracy under the contract. These plans & the specifications in connection therewith have been prepared for a specific site. Any and all responsibility for their use in whole or in part on any other site is hereby disclaimed by Flewelling & Moody.

CITY OF RIDGECREST

SGT. JOHN PINNEY MEMORIAL POOL REPLACEMENT

205 S WARNER ST, RIDGECREST, CA 93555

Drawing Title

MECHANICAL SCHEDULES

Job No. 3055-0100

Sheet No. **M0.03**

Date 08/07/2024

VRF OUTDOOR UNIT SCHEDULE

SYMBOL	MANUFACTURER AND MODEL NO.	NO. OF MODULES	LOCATION	SERVING	CAPACITIES		ELECTRICAL										REFRIGERANT	OPERATING WEIGHT (LBS)	MOUNTING	REMARKS
					COOLING (BTU/hr)	HEATING (BTU/hr)	COMPRESSOR		FAN KW	MCA	MOCP	POWER			IEER	EER	COP @ 47° F	SEER	SEER2	HSPF2				
							QTY	KW				VOLTS	PHASE	Hz										
CU-1	TOSHIBA CARRIER MMY-MAP0966HT9P-UL	1	ROOF	SICK BAY, LIFE GUARD FACILITIES, ADMINISTRATION OFFICE	96000	108000	2	2 x 3.0	1	36	40	208/230	3	60	23.10	13.50	4.10	17.56	-	-	R-410A	684	3/M6.03	SEE BELOW NOTES

NOTES:-

1. PROVIDE WITH ALL ACCESSORIES AND PERIPHERALS FOR A COMPLETE, WORKING INSTALLATION.
2. SEE VRF DIAGRAMS FOR PIPING AND WIRING DIAGRAMS.
3. MANUFACTURER SHALL PROVIDE ON-SITE STARTUP ASSISTANCE FOR A MINIMUM OF (2) WEEKS.
4. INSTALL OUTDOOR HEAT RECOVERY UNIT ON LEVEL EQUIPMENT PAD WITH VIBRATION ISOLATION.
5. COORDINATE ALL CONTROLS WITH CONTROLS CONTRACTOR PRIOR TO PURCHASING.
6. PROVIDE CONDENSATE DRAIN UNDER CU PER DETAIL.

VRF FAN COIL UNIT SCHEDULE

SYMBOL	MANUFACTURER AND MODEL NO.	OUTDOOR UNIT	TYPE	SERVING	FAN DATA				MIN. OSA (CFM)	CAPACITIES		ELECTRICAL						REFRIGERANT	OPERATING WEIGHT (LBS)	MOUNTING DETAIL	REMARKS
					MIN. CFM	MAX. CFM	ESP (") W.G.	MOTOR WATTS		COOLING (BTU/hr)	HEATING (BTU/hr)	MCA	MOCP	POWER								
														VOLTS	PHASE	Hz						
FCU-1	TOSHIBA CARRIER MMD-UP0721HP-UL	CU-1	DUCTED	FRONT DESK & LOBBY	1470	2235	1.0	1000	225	72000	81000	5.7	15	208/230	1	60		R-410A	218	8/M6.01	SEE BELOW NOTES
FCU-2	TOSHIBA CARRIER MMD-UP0071BHP-UL	CU-1	DUCTED	ADMINISTRATION OFFICE	212	318	0.6	150	20	7500	8500	0.91	15	208/230	1	60		R-410A	56	8/M6.01	SEE BELOW NOTES
FCU-3	TOSHIBA CARRIER MMD-UP0071BHP-UL	CU-1	DUCTED	SICK BAY	212	318	0.6	150	212	7500	8500	0.91	15	208/230	1	60		R-410A	56	8/M6.01	SEE BELOW NOTES
FCU-4	TOSHIBA CARRIER MMD-UP0121BHP-UL	CU-1	DUCTED	LIFE GUARD FACILITES, CORRIDOR	394	589	0.6	150	215	12000	13500	1.10	15	208/230	1	60		R-410A	73	8/M6.01	SEE BELOW NOTES

NOTES:-

1. PROVIDE SUCTION AND LIQUID REFRIGERANT LINES BETWEEN FAN COIL AND HEAT PUMP/CONDENSING UNIT. SIZE PER MANUFACTURER'S RECOMMENDATIONS.
2. SCHEDULED OPERATING WEIGHT INCLUDES ALL ACCESSORIES.
3. ALL SPLIT SYSTEMS SHALL USE R-410A REFRIGERANT.
4. COORDINATE ALL CONTROLS WITH CONTROLS CONTRACTOR PRIOR TO PURCHASING.
5. SEE VRF DIAGRAMS FOR PIPING AND WIRING DIAGRAMS.
6. PROVIDE CONDENSATE PUMP. REFER TO PLUMBING PLANS FOR CONDENSATE REMOVAL.
7. PROVIDE SECONDARY DRAIN PAN. SECONDARY CONDENSATE DRAIN (WATERTIGHT PAN) SHALL BE PROVIDED FOR COOLING COILS INSTALLED ABOVE THE CEILING OR IN FURRED SPACES. THE SECONDARY DRAIN SHALL TERMINATE IN A VISIBLE LOCATION.
8. PROVIDE CUSTOMIZED FILTER BOX WITH MERV-13 FILTER. THE FACE VELOCITY SHALL NOT EXCEED 250 FPM.
9. PROVIDE 10'-0" OF 1" DUCT LINING FOR EACH FAN COIL UNIT WITH SUPPLY AND RETURN AIR DUCTWORK.
10. PROVIDE COPPER - L TYPE REFRIGERANT PIPING WITH ALL PIPING INSTALLATION IN VRV SYSTEM.
11. PROVIDE SMOKE DETECTOR IN THE SUPPLY AIR DUCTWORK TO SHUT DOWN THE FAN COIL UNIT AND THE OUTSIDE AIR SUPPLY FAN UPON SENSING THE SMOKE.
12. PROVIDE WIRED THERMOSTAT SMMSe/SHRMe.

SPLIT DX FAN COIL UNIT SCHEDULE

INDOOR UNIT													OUTDOOR UNIT																	
SYMBOL	MANUFACTURER AND MODEL NO.	TYPE	SERVING	FAN DATA		MIN. OSA (CFM)	CAPACITIES		ELECTRICAL			REFRIGERANT	OPERATING WEIGHT (LBS)	MOUNTING DETAIL	SYMBOL	MANUFACTURER AND MODEL NO.	LOCATION	TONS	ELECTRICAL						REFRIGERANT			OPERATING WEIGHT (LBS)	SEER/ EER	HSPF/ COP	SEER2/ EER2	HSPF2/ COP2	MOUNTING DETAIL	REMARKS
				MIN. CFM	MAX. CFM		COOLING (BTU/hr)	HEATING (BTU/hr)	MCA	POWER									MCA	MOCP	POWER			TYPE	LIQUID SIZE	SUCTION SIZE						
										VOLTS	PHASE	Hz									VOLTS	PHASE	Hz									
FCU-7	TOSHIBA CARRIER RAV-SM242CTP-UL	DUCTED	SERVICE KITCHEN, CONCESSIONS	510	775	230	24000	27000	-	INDOOR POWERED BY OUTDOOR		R-410A	71	8/M6.01	HP-1	TOSHIBA CARRIER RAV-SP242AT2P-UL	ROOF	2	17	25	208/230	1	60	R-410A	3/8	5/8	152	- / -	- / -	19.40 / 12.40	10.30 / 3.80	2/M6.02	SEE BELOW NOTES 1,2,3,4,5,6,7,8
FCU-8	CARRIER 40MAHBQ12XA3	HIGHWALL	MDF ROOM	176	382	-	12000	12000	0.3125	INDOOR POWERED BY OUTDOOR		R-410A	22.93	9/M6.01	HP-2	CARRIER 38MARBQ12AA3	ROOF	1	15	15	208/230	1	60	R-410A	1/4	1/2	79.37	25.5 / 14.0	13.0 / 3.81	- / -	- / -	2/M6.02	SEE BELOW NOTES 1,2,3,4,5,6,7,8
FCU-9	CARRIER 40MAHBQ12XA3	HIGHWALL	ELECTRICAL ROOM	176	382	-	12000	12000	0.3125	INDOOR POWERED BY OUTDOOR		R-410A	22.93	9/M6.01	HP-3	CARRIER 38MARBQ12AA3	ROOF	1	15	15	208/230	1	60	R-410A	1/4	1/2	79.37	25.5 / 14.0	13.0 / 3.81	- / -	- / -	2/M6.02	SEE BELOW NOTES 1,2,3,4,5,6,7,8,9

NOTES:-

1. INDOOR UNITS ARE POWERED BY THE OUTDOOR UNITS.
2. HEAT PUMP OR CONDENSING UNIT SHALL BE MOUNTED ON HOUSEKEEPING PAD.
3. PROVIDE SUCTION AND LIQUID REFRIGERANT LINES BETWEEN FAN COIL AND HEAT PUMP/CONDENSING UNIT. SIZE PER MANUFACTURER'S RECOMMENDATIONS.
4. SCHEDULED OPERATING WEIGHT INCLUDES ALL ACCESSORIES.
5. ALL SPLIT SYSTEMS SHALL USE R-410A REFRIGERANT.
6. PROVIDE REFCOGOBI CONDENSATE PUMP WITH HIGH-WALL UNIT.
7. PROVIDE CONDENSATE PUMP WITH DUCTED FAN COIL UNIT.
8. PROVIDE THERMOSTAT 43FX.
9. THE EXHAUST FAN AND VENTILATION ARE THE MAIN SOURCE OF THE HEAT REJECTION FROM THE ELECTRICAL ROOM. ONLY IN HOTTER OUTSIDE AIR TEMPERATURES WHEN VENTILATION IS NOT SUFFICIENT THEN THE AC UNIT SHALL PROVIDE ADDITIONAL COOLING. AC SET TEMPERATURE IS 90 DF (ADJUSTABLE).

SEQUENCE OF OPERATION FOR ELECTRICAL ROOM'S FCU:-

THE ROOM IS COOLED THROUGH AIR CIRCULATION BY EXHAUST FAN IN ELECTRICAL ROOM AS PRIMARY COOLING. HOWEVER THE AC SYSTEM IS A BACKUP COOLING SYSTEM FOR WHEN THE OUTSIDE TEMPERATURE AND ROOM TEMPERATURES ARE SO HIGH THAT THE EXHAUST FAN VENTILATION IS NO MORE SUFFICIENT AND THE AC UNIT NEEDS TO RUN TO PROVIDE COOLING IN THE ROOM. THE ROOM SHOULD BE PROVIDED BY (2) THERMOSTAT, ONE FOR EXHAUST FAN AND ONE FOR AC UNIT. THE EXHAUST FAN AND AC UNIT TO BE INTERLOCKED SO THAT WHEN AC IS RUNNING THE EXHAUST FAN IS TURNED OFF. THE THERMOSTAT FOR AC UNIT CAN BE SET FOR 85 DF (ADJUSTABLE +- 5) TO TURN ON THE UNIT AND SHUT DOWN THE EXHAUST FAN. ONCE THE ROOM TEMPERATURE IS BELOW 85 (3 DF) THE AC UNIT TURNS OFF AND EXHAUST FAN START WORKING.

DEDICATED OUTDOOR AIR SYSTEM SCHEDULE

SYMBOL	MANUFACTURER AND MODEL NO.	LOCATION	SERVING	CAPACITIES			FAN DATA		MOTOR HP	ELETRICAL					EER	IEER	COP	REFRIGERANT TYPE	TOTAL OPERATING WEIGHT (LBS.)	MOUNTING DETAIL	REMARKS
				COOLING (MBH)	TOTAL REHEAT CAPACITY (MBH)	ELEC. HEATING @ 47° F (MBH)	AIR FLOW			MCA	MOCP	SUPPLY FAN									
							CFM	ESP.				V	PH	HZ							
DOAS-1	iAIRE UPC-FC12MHT024M00A-FGLVY	ROOF	MEN'S LOCKER ROOM, MEN'S SHOWER ROOM WOMEN'S LOCKER ROOM, WOMEN'S SHOWER ROOM MEN'S REST ROOM, WOMEN'S REST ROOM	118.0	43.5	116.0	2000	0.5 (in w.g.)	2.4	115.6	125.0	208	3	60	11.0	15.0	3.4	R-410A	1219.0		SEE BELOW NOTES

NOTES:-

1. AUTOMATIC SHUT-OFF SHALL BE REQUIRED PER 2022 CALIFORNIA MECHANICAL CODE SECTION 605.8.
2. DEDICATED OUTDOOR AIR SYSTEM UNIT SHALL HAVE A SINGLE POINT ELECTRICAL CONNECTION. ALL WIRING AND CONDUIT INTERNAL TO THE UNIT FOR POWER & CONTROLS SHALL BE FACTORY PRE-WIRED.
3. DEDICATED OUTDOOR AIR SYSTEM UNIT SHALL HAVE FACTORY FILTER RACK WITH 2" PLEATED MERV 8 & 4" PLEATED MERV 13.
4. DEDICATED OUTDOOR AIR SYSTEM UNIT SUPPLY FANS SHALL BE EQUIPPED WITH VARIABLE FREQUENCY DRIVES (VFD'S) WHICH ARE INTERNALLY PROTECTED.
5. DISCHARGE DUCT MUST BE GASKETED AND SCREWED DIRECTLY TO THE DISCHARGE PANEL OF THE UNIT.
6. PROVIDE CONDENSATE REMOVAL ON THE ROOF.
7. PROVIDE THERMOSTAT 43FX.
8. PROVIDE WITH 18" TALL MICROMELT VIBRATION ISOLATION ROOFCURB.

AGENCY

FLEWELLING & MOODY
architecture planning interiors

HEADQUARTERS OFFICE:
99 S. Lake Avenue, Suite 300
Pasadena, CA 91101
Phone: 323.543.8300
E-Mail: fm-pasadena@flewelling-moody.com

ANTELOPE VALLEY OFFICE:
1035 West Lancaster Bouldvard
Lancaster, California 93534
Phone: 661.949.0771
E-Mail: fm-lancaster@flewelling-moody.com

An Employee Owned Corporation

ARCHITECT

CONSULTANT

Budlong
An MBE|SBE|DBE|LSBE Firm
Glendale|Downtown LA|Fremont|Camarillo
W W W . B U D L O N G . C O M
Job No. 23-140

REGISTERED PROFESSIONAL ENGINEER — No. 29448 — EXP. 06-30-25 — MECHANICAL — STATE OF CALIFORNIA

Drawn by: Author

Check by: Checker

Revisions

No.	Date	Description
	01/26/24	100% DD
	03/01/24	50% CD
	05/09/24	90% CD
	08/05/24	100% CD
	11/25/24	100% CD V2
	01/31/25	100% CD V3
1	08/27/2025	BID ALTERNATE

All dimensions must be checked at the job by the contractor who accepts full responsibility for their accuracy under the contract. These plans & the specifications in connection therewith have been prepared for a specific site. Any and all responsibility for their use in whole or in part on any other site is hereby disclaimed by Flewelling & Moody.

CITY OF RIDGECREST

SGT. JOHN PINNEY MEMORIAL POOL REPLACEMENT

205 S WARNER ST, RIDGECREST, CA 93555

Drawing Title

MECHANICAL SCHEDULES

Job No. 3055-0000

Sheet No. **M0.03A6**

Date 08/07/2024

EXHAUST FAN SCHEDULE

SYMBOL	MANUFACTURER AND MODEL NO.	LOCATION	SERVING	AIR FLOW (CFM)	ESP (") W.G.	DRIVE	MOTOR		ELECTRICAL			WEIGHT (LBS)	MOUNTING DETAIL	REMARKS
							HP	FAN RPM	VOLTS	PHASE	Hz			
EF-1	LOREN COOK ACRU-D VF (150R17D (VF))	ROOF	MEN'S LOCKER ROOM, WOMEN'S LOCKER ROOM, MEN'S RESTROOM, WOMEN RESTROOM	2000	0.60	DIRECT DRIVE	3/4	1282	208	1	60	82	2/M6.03	SEE BELOW NOTES 1, 2, 3, 4, 5, 7, 8. INTERLOCK THE FAN WITH DOAS UNIT
EF-2	LOREN COOK ACRU-D VF (90R17DL (VF))	ROOF	EMPLOYEE RESTROOM AND SHOWER ROOM	200	0.50	DIRECT DRIVE	1/20	1569	115	1	60	41	2/M6.03	SEE BELOW NOTES 1, 2, 3, 4, 5, 6, 7, 11. INTERLOCK THE OCCUPANCY SENSOR.
EF-3	LOREN COOK ACRU-D VF (100R17DM (VF))	ROOF	JANITORIAL	350	0.55	DIRECT DRIVE	1/6	1645	115	1	60	48	2/M6.03	SEE BELOW NOTES 1, 2, 3, 4, 6, 7, 11. RUNS CONTINUOUSLY.
EF-4	LOREN COOK ACRU-D VF (90R17DL (VF))	ROOF	SICK BAY	212	0.40	DIRECT DRIVE	1/20	1468	115	1	60	41	2/M6.03	SEE BELOW NOTES 1, 2, 3, 4, 6, 7, 11. INTERLOCK WITH THE FCU-3.
EF-5	LOREN COOK CPV (135 CPV (VF))	ROOF	POOL MECHANICAL EQUIPMENT ROOM	2000	0.65	DIRECT DRIVE	3/4	1650	208	1	60	183	2/M6.03	SEE BELOW NOTES 1, 2, 8, 9, 10, 12, 13. RUNS CONTINUOUSLY.
EF-6	LOREN COOK ACRU-B (90R17DM (VF))	ROOF	POOL MECHANICAL EQUIPMENT ROOM	275	0.25	DIRECT DRIVE	1/6	1328	115	1	60	51	2/M6.03	SEE BELOW NOTES 1, 2, 3, 4, 7, 8, 11, 12. RUNS CONTINUOUSLY.
EF-7	LOREN COOK ACRU-B (90R17DM (VF))	ROOF	POOL MECHANICAL EQUIPMENT ROOM	275	0.25	DIRECT DRIVE	1/6	1328	115	1	60	51	2/M6.03	SEE BELOW NOTES 1, 2, 3, 4, 7, 8, 11, 12. RUNS CONTINUOUSLY.
EF-8	LOREN COOK ACRU-D VF (90R17DL (VF))	ROOF	ACCESSIBLE RESTROOMS	200	0.30	DIRECT DRIVE	1/20	1306	115	1	60	41	2/M6.03	SEE BELOW NOTES 1, 2, 3, 4, 5, 6, 7, 11. INTER LOCK WITH OCCUPANCY SENSOR.
EF-9	LOREN COOK SQN-D VF (100SQN17DH(VF))	RESTROOM	POOL EQUIPMET BUILDING - RESTROOMS	400	0.55	DIRECT DRIVE	1/6	1648	208	1	60	63	1/M6.02	SEE BELOW NOTES 1, 2, 4, 5, 7, 8. INTER LOCK WITH OCCUPANCY SENSOR.
EF-10	LOREN COOK ACRU-D VF (135R17D (VF))	ROOF	POOL EQUIPMET STORAGE	1275	0.35	DIRECT DRIVE	1/4	1108	208	1	60	65	2/M6.03	SEE BELOW NOTES 1, 2, 3, 4, 7, 8, 11, 12. RUNS CONTINUOUSLY.
EF-11	LOREN COOK ACRU-D VF (70R17DH (VF))	ROOF	ELECTRICAL ROOM	110	0.20	DIRECT DRIVE	1/20	1439	115	1	60	40	2/M6.03	SEE BELOW NOTES 1, 2, 4, 6, 7, 11, 12 ,14.

NOTES:-

1. PROVIDE A WIRING HARNESS ON THE FAN MOTOR WITH A 0-10 V CONNECTION WITH TRANSFORMER AND EXTERNAL CONTROL BY OTHERS.
2. EXTERNAL SIGNAL SPEED CONTROL.
3. PROVIDE ROOF CURB.
4. PROVIDE MOTOR COVER.
5. RESTROOM FANS SHALL BE ENRGY STAR RATED FANS.
6. EXTERNAL SIGNAL SPEED CONTROL ELECTORNICALLY COMMUTATED (EC) MOTOR TYPE P.
7. PROVIDE GRAVITY BACKD-DRAFT DAMPER.
8. EXTERNAL SIGNAL SPEED CONTROL ELECTORNICALLY COMMUTATED (EC) MOTOR TYPE N.
9. PROVIDE DISCHARGE SHUTTER.
10. MINIMUM 4" STRUCTURAL STEEL CHANNEL AS ISOLATION RAIL.
11. PROVIDE BIRD-SCREEN.
12. PHENOLIC EPOXY W/UV - (LIGHT GRAY).
13. PROVIDE WEATHER COVER.
14. PROVIDE VARI-FLOW AIR BALANCING KIT (VFABK) AND VARI-FLOW TEMPERATURE CONTROLLER (VFTC) WITH THE UNIT TO MAINTAIN THE SET POINT TEMPERATURE IN THE SERVING AREA.

SUPPLY FAN SCHEDULE

SYMBOL	MANUFACTURER AND MODEL NO.	LOCATION	SERVING	AIR FLOW (CFM)	ESP (") W.G.	DRIVE	MOTOR		ELECTRICAL			WEIGHT (LBS)	MOUNTING DETAIL	REMARKS
							HP	FAN RPM	VOLTS	PHASE	Hz			
SF-1	LOREN COOK KSP-B (90KSP-B)	ROOF	FCU-1, FCU-2, FCU-3, FCU-4, JANITORIAL	1022	0.35	BELT DRIVE	3/4	770	208	1	60	219	1/M6.04	SEE BELOW NOTES

NOTES:-

1. PROVIDE ROOF CURB, INTAKE BACKDRAFT DAMPER, SPEED CONTROLLER.
2. INTERLOCK WITH AREA / DUCT SMOKE DETECTOR AND TIE TO BUILDING LIFE AND SAFETY TO SHUT DOWN TH FAN IN CASE OF EMERGENCY.
3. PROVIDE CUSTOMIZED FILTER BOX WITH ACCESS DOOR AND MERV 8 FILTER.

LINEAR DIFFUSER SCHEDULE

MARK NO.	MANUFACTURER & MODEL	NO. OF SLOTS	MAX. NC	SLOT SIZE (IN)	MAX. CFM PER FOOT	INLET SIZE (IN)	DIFFUSER LENGTH (FT)	MAX S.P. (IN)	REMARKS
LSD-1	TITUS FL-20	2	<10	2.0"	165	10	10.0	0.021	SEE NOTES
LRD-1	TITUS FL-20	2	18	2.5"	330	10	10.0	0.096	SEE NOTES

NOTES:

1. PROVIDE YOUNG'S (BALDOR) REMOTE DAMPER ACTUATOR FOR VOLUME DAMPERS ABOVE A HARD LID CEILING. VERIFY PULLEY SWIVEL MOUNT LOCATION IN THE CEILING W/ARCHITECT BEFORE INSTALLATION.
2. VERIFY ALL CEILING DIFFUSER LOCATIONS W/ARCHITECT BEFORE ANY INSTALLTION OCCURS.
3. VERIFY AND SUBMIT BORDER TYPE FOR LINEARS W/ARCHITECT & ENGINEER FOR APPROVAL. PAINT THE INSIDE OF THE DIFFUSERS BLACK AND ENSURE THAT THE BORDER TYPE SELECTED IS TRIMLESS. PAINT TO MATCH CEILING FINISH.
4. PROVIDE FACTORY LINED BOOTS IN LENGTHS AS CALLED OUT ON DRAWINGS. LENGTH OF DIFFUSER WHICH IS NOT SUPPLY SHALL BE KEPT OPEN OR BLANKED OFF. PROVIDE FACTORY RETURN HOOD TO PREVENT "SEE- THROUGH" EFFECT. REMOVE PATTERN CONTROLLERS ON ALL RETURN LINEARS W/ARCHITECT'S APPROVAL. SET DIFFUSER TO DISCHARGE HORIZONTALLY U.O.N.

ELECTRIC HEATER SCHEDULE

SYMBOL	MANUFACTURER AND MODEL NO.	TYPE	SERVING	AIR FLOW (CFM) @ 1000 FPM	KW	BTUs	ELECTRICAL				TEMP. RISE	WEIGHT (LBS.)	MOUNTING DETAIL	REMARKS
							VOLTS	PHASE	Hz	AMPS				
EH-1	MARKEL PRODUCTS COMPANY F1FUHE05003T	WALL MOUNTED	FIRE SPRINKLER RISER ROOM 104	400	5.0	17100	208	1	60	24.3	40 °F	36.0	2/M6.04	PROVIDE WALL THERMOSTAT TO OPERATE UNIT WHEN ROOM TEMPERATURE GOES BELOW 40 °F.
EH-2	MARKEL PRODUCTS COMPANY F1FUHE05003T	WALL MOUNTED	POOL EQUIPMENT STORAGE 127	400	5.0	17100	208	1	60	24.3	40 °F	36.0	2/M6.04	PROVIDE WALL THERMOSTAT TO OPERATE UNIT WHEN ROOM TEMPERATURE GOES BELOW 40 °F.

AIR TERMINAL SCHEDULE

TAG	AIR FLOW CFM RANGE	MANUFACTURER	MODEL NUMBER	OPENING SIZE	NECK SIZE	MAX PRESSURE DROP (IN W.G.)	MAX NC
CD-1	0 - 100	TITUS	OMNI-AA	24" x 24"	6" ø	0.08	25
CD-2	101 - 180	TITUS	OMNI-AA	24" x 24"	8" ø	0.08	25
CD-3	181 - 275	TITUS	OMNI-AA	24" x 24"	10" ø	0.08	25
CD-4	276 - 390	TITUS	OMNI-AA	24" x 24"	12" ø	0.08	25
CD-5	391 - 530	TITUS	OMNI-AA	24" x 24"	14" ø	0.08	25
CD-6	531 - 610	TITUS	OMNI-AA	24" x 24"	15" ø	0.08	25
SG-1	0 - 95	TITUS	300RL	8" x 8"	6" x 6"	0.08	25
SG-2	96-180	TITUS	300RL	10" x 10"	8" x 8"	0.08	25
SG-3	181-290	TITUS	300RL	12" x 12"	10" x 10"	0.08	25
SG-4	291-440	TITUS	300RL	14" x 14"	12" x 12"	0.08	25
SG-5	441-600	TITUS	300RL	16" x 16"	14" x 14"	0.08	25
SG-6	601-770	TITUS	300RL	18" x 18"	16" x 16"	0.08	25
SG-7	771-950	TITUS	300RL	20" x 20"	18" x 18"	0.08	25
SG-6	951-1150	TITUS	300RL	22" x 22"	20" x 20"	0.08	25
CR-1	0 - 125	TITUS	PAR	24" x 24"	6" x 6"	0.09	25
CR-2	126 - 220	TITUS	PAR	24" x 24"	8" x 8"	0.09	25
CR-3	221 - 345	TITUS	PAR	24" x 24"	10" x 10"	0.09	25
CR-4	346 - 500	TITUS	PAR	24" x 24"	12" x 12"	0.09	25
CR-5	501 - 780	TITUS	PAR	24" x 24"	15" x 15"	0.09	25
CR-6	781 - 1125	TITUS	PAR	24" x 24"	18" x 18"	0.09	25
CR-7	1126 - 1680	TITUS	PAR	24" x 24"	22" x 22"	0.09	26
RG-1	0-90	TITUS	355RL	8" x 8"	6" x 6"	0.08	25
RG-2	91-180	TITUS	355RL	10" x 10"	8" x 8"	0.08	25
RG-3	181-280	TITUS	355RL	12" x 12"	10" x 10"	0.08	25
RG-4	281-400	TITUS	355RL	14" x 14"	12" x 12"	0.08	25
RG-5	401-530	TITUS	355RL	16" x 16"	14" x 14"	0.08	25
RG-6	531-700	TITUS	355RL	18" x 18"	16" x 16"	0.08	25
RG-7	701-900	TITUS	355RL	20" x 20"	18" x 18"	0.08	25
RG-8	901-1050	TITUS	355RL	22" x 22"	20" x 20"	0.08	25
RG-9	2010	TITUS	355RL	48" x 18"	-	0.08	25
EG-1	0 - 95	TITUS	355RL	8" x 8"	6" x 6"	0.08	25
EG-2	96 - 130	TITUS	355RL	10" x 8"	8" x 6"	0.08	25
EG-3	131 - 170	TITUS	355RL	12" x 8"	10" x 6"	0.08	25
EG-4	171 - 185	TITUS	355RL	10" x 10"	8" x 8"	0.08	25
EG-5	186 - 205	TITUS	355RL	14" x 8"	12" x 6"	0.08	25
EG-6	206 - 240	TITUS	355RL	16" x 8"	14" x 6"	0.08	25
EG-7	241 - 285	TITUS	355RL	14" x 10"	12" x 8"	0.08	25
EG-8	286 - 295	TITUS	355RL	12" x 12"	10" x 10"	0.08	25
EG-9	296 - 315	TITUS	355RL	20" x 8"	18" x 6"	0.08	25
EG-10	316 - 360	TITUS	355RL	14" x 12"	12" x 10"	0.08	25
EG-11	361 - 385	TITUS	355RL	24" x 8"	22" x 6"	0.08	25
EG-12	386 - 440	TITUS	355RL	32" x 8"	30" x 6"	0.08	25
EG-13	500	TITUS	355RL	24" x 24"	-	0.08	25

AGENCY

REVIEWED FOR CODE COMPLIANCE BY: WILLDAN ENGINEERING

Approval of these plans & specifications shall not be construed to be a permit for, or an approval of any violation of any Federal, State, County or City laws or ordinances. One set of approved plans must be kept on the job until completion.

9:27:08 AM Jul 21, 2025

FLEWELLING & MOODY
architecture planning interiors

HEADQUARTERS OFFICE:
99 S. Lake Avenue, Suite 300
Pasadena, CA 91101
Phone: 323.543.8300
E-Mail: fm-pasadena@flewelling-moody.com

ANTELOPE VALLEY OFFICE:
1035 West Lancaster Boulevard
Lancaster, California 93534
Phone: 661.949.0771
E-Mail: fm-lancaster@flewelling-moody.com

An Employee Owned Corporation

ARCHITECT

CONSULTANT

Budlong
An MBE|SBE|DBE|LSBE Firm
Glendale|Downtown LA|Fremont|Camarillo
W W W . B U D L O N G . C O M
Job No. 23-140

REGISTERED PROFESSIONAL ENGINEER SUNIL PATEL No. 29448 EXP. 06-30-25 MECHANICAL OF CALIFORNIA

Drawn by: Author

Check by: Checker

Revisions

No.	Date	Description
	01/26/24	100% DD
	03/01/24	50% CD
	05/09/24	90% CD
	08/05/24	100% CD
	11/25/24	100% CD V2
	01/31/25	100% CD V3

All dimensions must be checked at the job by the contractor who accepts full responsibility for their accuracy under the contract. These plans & the specifications in connection therewith have been prepared for a specific site. Any and all responsibility for their use in whole or in part on any other site is hereby disclaimed by Flewelling & Moody.

CITY OF RIDGECREST

SGT. JOHN PINNEY MEMORIAL POOL REPLACEMENT

205 S WARNER ST, RIDGECREST, CA 93555

Drawing Title

MECHANICAL SCHEDULES

Job No. 3055-0100

Sheet No. **M0.04**

Date 08/07/2024

EXHAUST FAN SCHEDULE

SYMBOL	MANUFACTURER AND MODEL NO.	LOCATION	SERVING	AIR FLOW (CFM)	ESP (") W.G.	DRIVE	MOTOR		ELECTRICAL			WEIGHT (LBS)	MOUNTING DETAIL	REMARKS
							HP	FAN RPM	VOLTS	PHASE	Hz			
EF-1	LOREN COOK ACRU-D VF (150R17D (VF))	ROOF	MEN'S LOCKER ROOM, WOMEN'S LOCKER ROOM, MEN'S RESTROOM, WOMEN RESTROOM	2000	0.60	DIRECT DRIVE	3/4	1282	208	1	60	82	2/M6.03	SEE BELOW NOTES 1, 2, 3, 4, 5, 7, 8. INTERLOCK THE FAN WITH DOAS UNIT
EF-2	LOREN COOK ACRU-D VF (90R17DL (VF))	ROOF	EMPLOYEE RESTROOM AND SHOWER ROOM	200	0.50	DIRECT DRIVE	1/20	1569	115	1	60	41	2/M6.03	SEE BELOW NOTES 1, 2, 3, 4, 5, 6, 7, 11. INTERLOCK THE OCCUPANCY SENSOR.
EF-3	LOREN COOK ACRU-D VF (100R17DM (VF))	ROOF	JANITORIAL	350	0.55	DIRECT DRIVE	1/6	1645	115	1	60	48	2/M6.03	SEE BELOW NOTES 1, 2, 3, 4, 6, 7, 11. RUNS CONTINUOUSLY.
EF-4	LOREN COOK ACRU-D VF (90R17DL (VF))	ROOF	SICK BAY	212	0.40	DIRECT DRIVE	1/20	1468	115	1	60	41	2/M6.03	SEE BELOW NOTES 1, 2, 3, 4, 6, 7, 11. INTERLOCK WITH THE FCU-3.
EF-5	LOREN COOK CPV (135 CPV (VF))	ROOF	POOL MECHANICAL EQUIPMENT ROOM	2000	0.65	DIRECT DRIVE	3/4	1650	208	1	60	183	2/M6.03	SEE BELOW NOTES 1, 2, 8, 9, 10, 12, 13. RUNS CONTINUOUSLY.
EF-6	LOREN COOK ACRU-B (90R17DM (VF))	ROOF	POOL MECHANICAL EQUIPMENT ROOM	275	0.25	DIRECT DRIVE	1/6	1328	115	1	60	51	2/M6.03	SEE BELOW NOTES 1, 2, 3, 4, 7, 8, 11, 12. RUNS CONTINUOUSLY.
EF-7	LOREN COOK ACRU-B (90R17DM (VF))	ROOF	POOL MECHANICAL EQUIPMENT ROOM	275	0.25	DIRECT DRIVE	1/6	1328	115	1	60	51	2/M6.03	SEE BELOW NOTES 1, 2, 3, 4, 7, 8, 11, 12. RUNS CONTINUOUSLY.
EF-8	LOREN COOK ACRU-D VF (90R17DL (VF))	ROOF	ACCESSIBLE RESTROOMS	200	0.30	DIRECT DRIVE	1/20	1306	115	1	60	41	2/M6.03	SEE BELOW NOTES 1, 2, 3, 4, 5, 6, 7, 11. INTER LOCK WITH OCCUPANCY SENSOR.
EF-9	LOREN COOK SQN-D VF (100SQN17DH(VF))	RESTROOM	POOL EQUIPMET BUILDING - RESTROOMS	400	0.55	DIRECT DRIVE	1/6	1648	208	1	60	63	1/M6.02	SEE BELOW NOTES 1, 2, 4, 5, 7, 8. INTER LOCK WITH OCCUPANCY SENSOR.
EF-10	LOREN COOK ACRU-D VF (135R17D (VF))	ROOF	POOL EQUIPMET STORAGE	1275	0.35	DIRECT DRIVE	1/4	1108	208	1	60	65	2/M6.03	SEE BELOW NOTES 1, 2, 3, 4, 7, 8, 11, 12. RUNS CONTINUOUSLY.
EF-11	LOREN COOK ACRU-D VF (70R17DH (VF))	ROOF	ELECTRICAL ROOM	110	0.20	DIRECT DRIVE	1/20	1439	115	1	60	40	2/M6.03	SEE BELOW NOTES 1, 2, 4, 6, 7, 11, 12 ,14.

NOTES:-

1. PROVIDE A WIRING HARNESS ON THE FAN MOTOR WITH A 0-10 V CONNECTION WITH TRANSFORMER AND EXTERNAL CONTROL BY OTHERS.
2. EXTERNAL SIGNAL SPEED CONTROL.
3. PROVIDE ROOF CURB.
4. PROVIDE MOTOR COVER.
5. RESTROOM FANS SHALL BE ENRGY STAR RATED FANS.
6. EXTERNAL SIGNAL SPEED CONTROL ELECTORNICALLY COMMUTATED (EC) MOTOR TYPE P.
7. PROVIDE GRAVITY BACKD-DRAFT DAMPER.
8. EXTERNAL SIGNAL SPEED CONTROL ELECTORNICALLY COMMUTATED (EC) MOTOR TYPE N.
9. PROVIDE DISCHARGE SHUTTER.
10. MINIMUM 4" STRUCTURAL STEEL CHANNEL AS ISOLATION RAIL.
11. PROVIDE BIRD-SCREEN.
12. PHENOLIC EPOXY W/UV - (LIGHT GRAY).
13. PROVIDE WEATHER COVER.
14. PROVIDE VARI-FLOW AIR BALANCING KIT (VFABK) AND VARI-FLOW TEMPERATURE CONTROLLER (VFTC) WITH THE UNIT TO MAINTAIN THE SET POINT TEMPERATURE IN THE SERVING AREA.

SUPPLY FAN SCHEDULE

SYMBOL	MANUFACTURER AND MODEL NO.	LOCATION	SERVING	AIR FLOW (CFM)	ESP (") W.G.	DRIVE	MOTOR		ELECTRICAL			WEIGHT (LBS)	MOUNTING DETAIL	REMARKS
							HP	FAN RPM	VOLTS	PHASE	Hz			
SF-1	LOREN COOK KSP-B (90KSP-B)	ROOF	FCU-1, FCU-2, FCU-3, FCU-4, JANITORIAL	1022	0.35	BELT DRIVE	3/4	770	208	1	60	219	1/M6.04	SEE BELOW NOTES

NOTES:-

1. PROVIDE ROOF CURB, INTAKE BACKDRAFT DAMPER, SPEED CONTROLLER.
2. INTERLOCK WITH AREA / DUCT SMOKE DETECTOR AND TIE TO BUILDING LIFE AND SAFETY TO SHUT DOWN TH FAN IN CASE OF EMERGENCY.
3. PROVIDE CUSTOMIZED FILTER BOX WITH ACCESS DOOR AND MERV 8 FILTER.

ELECTRIC HEATER SCHEDULE

SYMBOL	MANUFACTURER AND MODEL NO.	TYPE	SERVING	AIR FLOW (CFM) @ 1000 FPM	KW	BTUs	ELECTRICAL				TEMP. RISE	WEIGHT (LBS.)	MOUNTING DETAIL	REMARKS
							VOLTS	PHASE	Hz	AMPS				
EH-1	MARKEL PRODUCTS COMPANY F1FUHE05003T	WALL MOUNTED	FIRE SPRINKLER RISER ROOM 104	400	5.0	17100	208	1	60	24.3	40 °F	36.0	2/M6.04	PROVIDE WALL THERMOSTAT TO OPERATE UNIT WHEN ROOM TEMPERATURE GOES BELOW 40 °F.
EH-2	MARKEL PRODUCTS COMPANY F1FUHE05003T	WALL MOUNTED	POOL EQUIPMENT STORAGE 127	400	5.0	17100	208	1	60	24.3	40 °F	36.0	2/M6.04	PROVIDE WALL THERMOSTAT TO OPERATE UNIT WHEN ROOM TEMPERATURE GOES BELOW 40 °F.

1

AIR TERMINAL SCHEDULE

TAG	AIR FLOW CFM RANGE	MANUFACTURER	MODEL NUMBER	OPENING SIZE	NECK SIZE	MAX PRESSURE DROP (IN W.G.)	MAX NC
CD-1	0 - 100	TITUS	OMNI-AA	24" x 24"	6" ø	0.08	25
CD-2	101 - 180	TITUS	OMNI-AA	24" x 24"	8" ø	0.08	25
CD-3	181 - 275	TITUS	OMNI-AA	24" x 24"	10" ø	0.08	25
CD-4	276 - 390	TITUS	OMNI-AA	24" x 24"	12" ø	0.08	25
CD-5	391 - 530	TITUS	OMNI-AA	24" x 24"	14" ø	0.08	25
CD-6	531 - 610	TITUS	OMNI-AA	24" x 24"	15" ø	0.08	25
SG-1	0 - 95	TITUS	300RL	8" x 8"	6" x 6"	0.08	25
SG-2	96-180	TITUS	300RL	10" x 10"	8" x 8"	0.08	25
SG-3	181-290	TITUS	300RL	12" x 12"	10" x 10"	0.08	25
SG-4	291-440	TITUS	300RL	14" x 14"	12" x 12"	0.08	25
SG-5	441-600	TITUS	300RL	16" x 16"	14" x 14"	0.08	25
SG-6	601-770	TITUS	300RL	18" x 18"	16" x 16"	0.08	25
SG-7	771-950	TITUS	300RL	20" x 20"	18" x 18"	0.08	25
SG-6	951-1150	TITUS	300RL	22" x 22"	20" x 20"	0.08	25
CR-1	0 - 125	TITUS	PAR	24" x 24"	6" x 6"	0.09	25
CR-2	126 - 220	TITUS	PAR	24" x 24"	8" x 8"	0.09	25
CR-3	221 - 345	TITUS	PAR	24" x 24"	10" x 10"	0.09	25
CR-4	346 - 500	TITUS	PAR	24" x 24"	12" x 12"	0.09	25
CR-5	501 - 780	TITUS	PAR	24" x 24"	15" x 15"	0.09	25
CR-6	781 - 1125	TITUS	PAR	24" x 24"	18" x 18"	0.09	25
CR-7	1126 - 1680	TITUS	PAR	24" x 24"	22" x 22"	0.09	26
RG-1	0-90	TITUS	355RL	8" x 8"	6" x 6"	0.08	25
RG-2	91-180	TITUS	355RL	10" x 10"	8" x 8"	0.08	25
RG-3	181-280	TITUS	355RL	12" x 12"	10" x 10"	0.08	25
RG-4	281-400	TITUS	355RL	14" x 14"	12" x 12"	0.08	25
RG-5	401-530	TITUS	355RL	16" x 16"	14" x 14"	0.08	25
RG-6	531-700	TITUS	355RL	18" x 18"	16" x 16"	0.08	25
RG-7	701-900	TITUS	355RL	20" x 20"	18" x 18"	0.08	25
RG-8	901-1050	TITUS	355RL	22" x 22"	20" x 20"	0.08	25
RG-9	2010	TITUS	355RL	48" x 18"	-	0.08	25
EG-1	0 - 95	TITUS	355RL	8" x 8"	6" x 6"	0.08	25
EG-2	96 - 130	TITUS	355RL	10" x 8"	8" x 6"	0.08	25
EG-3	131 - 170	TITUS	355RL	12" x 8"	10" x 6"	0.08	25
EG-4	171 - 185	TITUS	355RL	10" x 10"	8" x 8"	0.08	25
EG-5	186 - 205	TITUS	355RL	14" x 8"	12" x 6"	0.08	25
EG-6	206 - 240	TITUS	355RL	16" x 8"	14" x 6"	0.08	25
EG-7	241 - 285	TITUS	355RL	14" x 10"	12" x 8"	0.08	25
EG-8	286 - 295	TITUS	355RL	12" x 12"	10" x 10"	0.08	25
EG-9	296 - 315	TITUS	355RL	20" x 8"	18" x 6"	0.08	25
EG-10	316 - 360	TITUS	355RL	14" x 12"	12" x 10"	0.08	25
EG-11	361 - 385	TITUS	355RL	24" x 8"	22" x 6"	0.08	25
EG-12	386 - 440	TITUS	355RL	32" x 8"	30" x 6"	0.08	25
EG-13	500	TITUS	355RL	24" x 24"	-	0.08	25

AGENCY

FLEWELLING & MOODY
architecture planning interiors

HEADQUARTERS OFFICE:
99 S. Lake Avenue, Suite 300
Pasadena, CA 91101
Phone: 323.543.8300
E-Mail: fm-pasadena@flewelling-moody.com

ANTELOPE VALLEY OFFICE:
1035 West Lancaster Bouldvard
Lancaster, California 93534
Phone: 661.949.0771
E-Mail: fm-lancaster@flewelling-moody.com

An Employee Owned Corporation

ARCHITECT

CONSULTANT

Budlong
An MBE|SBE|DBE|LSBE Firm
Glendale|Downtown LA|Fremont|Camarillo
W W W . B U D L O N G . C O M
Job No. 23-140

REGISTERED PROFESSIONAL ENGINEER SUNIL PATEL No. 29448 EXP. 06-30-25 MECHANICAL STATE OF CALIFORNIA

Drawn by: Author

Check by: Checker

Revisions

No.	Date	Description
	01/26/24	100% DD
	03/01/24	50% CD
	05/09/24	90% CD
	08/05/24	100% CD
	11/25/24	100% CD V2
	01/31/25	100% CD V3
1	08/27/2025	BID ALTERNATE

All dimensions must be checked at the job by the contractor who accepts full responsibility for their accuracy under the contract. These plans & the specifications in connection therewith have been prepared for a specfic site. Any and all responsibility for their use in whole or in part on any other site is hereby declaimed by Flewelling & Moody.

CITY OF RIDGECREST

SGT. JOHN PINNEY MEMORIAL POOL REPLACEMENT

205 S WARNER ST, RIDGECREST, CA 93555

Drawing Title

MECHANICAL SCHEDULES

Job No. 3055-0000

Sheet No. **M0.04A6**

Date 08/07/2024

EXHAUST FAN SCHEDULE

SYMBOL	MANUFACTURER AND MODEL NO.	LOCATION	SERVING	AIR FLOW (CFM)	ESP (") W.G.	DRIVE	MOTOR		ELECTRICAL			WEIGHT (LBS)	MOUNTING DETAIL	REMARKS
							HP	FAN RPM	VOLTS	PHASE	Hz			
EF-1	LOREN COOK ACRU-D VF (150R17D (VF))	ROOF	MEN'S LOCKER ROOM, WOMEN'S LOCKER ROOM, MEN'S RESTROOM, WOMEN RESTROOM	2000	0.60	DIRECT DRIVE	3/4	1282	208	1	60	82	2/M6.03	SEE BELOW NOTES 1, 2, 3, 4, 5, 7, 8. INTERLOCK THE FAN WITH DOAS UNIT
EF-2	LOREN COOK ACRU-D VF (90R17DL (VF))	ROOF	EMPLOYEE RESTROOM AND SHOWER ROOM	200	0.50	DIRECT DRIVE	1/20	1569	115	1	60	41	2/M6.03	SEE BELOW NOTES 1, 2, 3, 4, 5, 6, 7, 11. INTERLOCK THE OCCUPANCY SENSOR.
EF-3	LOREN COOK ACRU-D VF (100R17DM (VF))	ROOF	JANITORIAL	350	0.55	DIRECT DRIVE	1/6	1645	115	1	60	48	2/M6.03	SEE BELOW NOTES 1, 2, 3, 4, 6, 7, 11. RUNS CONTINUOUSLY.
EF-4	LOREN COOK ACRU-D VF (90R17DL (VF))	ROOF	SICK BAY	212	0.40	DIRECT DRIVE	1/20	1468	115	1	60	41	2/M6.03	SEE BELOW NOTES 1, 2, 3, 4, 6, 7, 11. INTERLOCK WITH THE FCU-3.
EF-5	LOREN COOK CPV (135 CPV (VF))	ROOF	POOL MECHANICAL EQUIPMENT ROOM	2000	0.65	DIRECT DRIVE	3/4	1650	208	1	60	183	2/M6.03	SEE BELOW NOTES 1, 2, 8, 9, 10, 12, 13. RUNS CONTINUOUSLY.
EF-6	LOREN COOK ACRU-B (90R17DM (VF))	ROOF	POOL MECHANICAL EQUIPMENT ROOM	275	0.25	DIRECT DRIVE	1/6	1328	115	1	60	51	2/M6.03	SEE BELOW NOTES 1, 2, 3, 4, 7, 8, 11, 12. RUNS CONTINUOUSLY.
EF-7	LOREN COOK ACRU-B (90R17DM (VF))	ROOF	POOL MECHANICAL EQUIPMENT ROOM	275	0.25	DIRECT DRIVE	1/6	1328	115	1	60	51	2/M6.03	SEE BELOW NOTES 1, 2, 3, 4, 7, 8, 11, 12. RUNS CONTINUOUSLY.
EF-8	LOREN COOK ACRU-D VF (90R17DL (VF))	ROOF	ACCESSIBLE RESTROOMS	200	0.30	DIRECT DRIVE	1/20	1306	115	1	60	41	2/M6.03	SEE BELOW NOTES 1, 2, 3, 4, 5, 6, 7, 11. INTER LOCK WITH OCCUPANCY SENSOR.
EF-9	LOREN COOK ACRU-D VF (70R17DH (VF))	ROOF	ELECTRICAL ROOM	110	0.20	DIRECT DRIVE	1/20	1439	115	1	60	40	2/M6.03	SEE BELOW NOTES 1, 2, 4, 6, 7, 11, 12 ,14.

NOTES:-

1. PROVIDE A WIRING HARNESS ON THE FAN MOTOR WITH A 0-10 V CONNECTION WITH TRANSFORMER AND EXTERNAL CONTROL BY OTHERS.
2. EXTERNAL SIGNAL SPEED CONTROL.
3. PROVIDE ROOF CURB.
4. PROVIDE MOTOR COVER.
5. RESTROOM FANS SHALL BE ENRGY STAR RATED FANS.
6. EXTERNAL SIGNAL SPEED CONTROL ELECTORNICALLY COMMUTATED (EC) MOTOR TYPE P.
7. PROVIDE GRAVITY BACKD-DRAFT DAMPER.
8. EXTERNAL SIGNAL SPEED CONTROL ELECTORNICALLY COMMUTATED (EC) MOTOR TYPE N.
9. PROVIDE DISCHARGE SHUTTER.
10. MINIMUM 4" STRUCTURAL STEEL CHANNEL AS ISOLATION RAIL.
11. PROVIDE BIRD-SCREEN.
12. PHENOLIC EPOXY W/UV - (LIGHT GRAY).
13. PROVIDE WEATHER COVER.
14. PROVIDE VARI-FLOW AIR BALANCING KIT (VFABK) AND VARI-FLOW TEMPERATURE CONTROLLER (VFTC) WITH THE UNIT TO MAINTAIN THE SET POINT TEMPERATURE IN THE SERVING AREA.

SUPPLY FAN SCHEDULE

SYMBOL	MANUFACTURER AND MODEL NO.	LOCATION	SERVING	AIR FLOW (CFM)	ESP (") W.G.	DRIVE	MOTOR		ELECTRICAL			WEIGHT (LBS)	MOUNTING DETAIL	REMARKS
							HP	FAN RPM	VOLTS	PHASE	Hz			
SF-1	LOREN COOK KSP-B (90KSP-B)	ROOF	FCU-1, FCU-2, FCU-3, FCU-4, JANITORIAL	1022	0.35	BELT DRIVE	3/4	770	208	1	60	219	1/M6.04	SEE BELOW NOTES

NOTES:-

1. PROVIDE ROOF CURB, INTAKE BACKDRAFT DAMPER, SPEED CONTROLLER.
2. INTERLOCK WITH AREA / DUCT SMOKE DETECTOR AND TIE TO BUILDING LIFE AND SAFETY TO SHUT DOWN TH FAN IN CASE OF EMERGENCY.
3. PROVIDE CUSTOMIZED FILTER BOX WITH ACCESS DOOR AND MERV 8 FILTER.

ELECTRIC HEATER SCHEDULE

SYMBOL	MANUFACTURER AND MODEL NO.	TYPE	SERVING	AIR FLOW (CFM) @ 1000 FPM	KW	BTUs	ELECTRICAL				TEMP. RISE	WEIGHT (LBS.)	MOUNTING DETAIL	REMARKS
							VOLTS	PHASE	Hz	AMPS				
EH-1	MARKEL PRODUCTS COMPANY F1FUHE05003T	WALL MOUNTED	FIRE SPRINKLER RISER ROOM 104	400	5.0	17100	208	1	60	24.3	40 °F	36.0	2/M6.04	PROVIDE WALL THERMOSTAT TO OPERATE UNIT WHEN ROOM TEMPERATURE GOES BELOW 40 °F.

LINEAR DIFFUSER SCHEDULE

MARK NO.	MANUFACTURER & MODEL	NO. OF SLOTS	MAX. NC	SLOT SIZE (IN)	MAX. CFM PER FOOT	INLET SIZE (IN)	DIFFUSER LENGTH (FT)	MAX S.P. (IN)	REMARKS
LSD-1	TITUS FL-20	2	<10	2.0"	165	10	10.0	0.021	SEE NOTES
LRD-1	TITUS FL-20	2	18	2.5"	330	10	10.0	0.096	SEE NOTES

NOTES:

1. PROVIDE YOUNG'S (BALDOR) REMOTE DAMPER ACTUATOR FOR VOLUME DAMPERS ABOVE A HARD LID CEILING. VERIFY PULLEY SWIVEL MOUNT LOCATION IN THE CEILING W/ARCHITECT BEFORE INSTALLATION.
2. VERIFY ALL CEILING DIFFUSER LOCATIONS W/ARCHITECT BEFORE ANY INSTALLTION OCCURS.
3. VERIFY AND SUBMIT BORDER TYPE FOR LINEARS W/ARCHITECT & ENGINEER FOR APPROVAL. PAINT THE INSIDE OF THE DIFFUSERS BLACK AND ENSURE THAT THE BORDER TYPE SELECTED IS TRIMLESS. PAINT TO MATCH CEILING FINISH.
4. PROVIDE FACTORY LINED BOOTS IN LENGTHS AS CALLED OUT ON DRAWINGS. LENGTH OF DIFFUSER WHICH IS NOT SUPPLY SHALL BE KEPT OPEN OR BLANKED OFF. PROVIDE FACTORY RETURN HOOD TO PREVENT "SEE- THROUGH" EFFECT. REMOVE PATTERN CONTROLLERS ON ALL RETURN LINEARS W/ARCHITECT'S APPROVAL. SET DIFFUSER TO DISCHARGE HORIZONTALLY U.O.N.

AIR TERMINAL SCHEDULE

TAG	AIR FLOW CFM RANGE	MANUFACTURER	MODEL NUMBER	OPENING SIZE	NECK SIZE	MAX PRESSURE DROP (IN W.G.)	MAX NC
CD-1	0 - 100	TITUS	OMNI-AA	24" x 24"	6" ø	0.08	25
CD-2	101 - 180	TITUS	OMNI-AA	24" x 24"	8" ø	0.08	25
CD-3	181 - 275	TITUS	OMNI-AA	24" x 24"	10" ø	0.08	25
CD-4	276 - 390	TITUS	OMNI-AA	24" x 24"	12" ø	0.08	25
CD-5	391 - 530	TITUS	OMNI-AA	24" x 24"	14" ø	0.08	25
CD-6	531 - 610	TITUS	OMNI-AA	24" x 24"	15" ø	0.08	25
SG-1	0 - 95	TITUS	300RL	8" x 8"	6" x 6"	0.08	25
SG-2	96-180	TITUS	300RL	10" x 10"	8" x 8"	0.08	25
SG-3	181-290	TITUS	300RL	12" x 12"	10" x 10"	0.08	25
SG-4	291-440	TITUS	300RL	14" x 14"	12" x 12"	0.08	25
SG-5	441-600	TITUS	300RL	16" x 16"	14" x 14"	0.08	25
SG-6	601-770	TITUS	300RL	18" x 18"	16" x 16"	0.08	25
SG-7	771-950	TITUS	300RL	20" x 20"	18" x 18"	0.08	25
SG-6	951-1150	TITUS	300RL	22" x 22"	20" x 20"	0.08	25
CR-1	0 - 125	TITUS	PAR	24" x 24"	6" x 6"	0.09	25
CR-2	126 - 220	TITUS	PAR	24" x 24"	8" x 8"	0.09	25
CR-3	221 - 345	TITUS	PAR	24" x 24"	10" x 10"	0.09	25
CR-4	346 - 500	TITUS	PAR	24" x 24"	12" x 12"	0.09	25
CR-5	501 - 780	TITUS	PAR	24" x 24"	15" x 15"	0.09	25
CR-6	781 - 1125	TITUS	PAR	24" x 24"	18" x 18"	0.09	25
CR-7	1126 - 1680	TITUS	PAR	24" x 24"	22" x 22"	0.09	26
RG-1	0-90	TITUS	355RL	8" x 8"	6" x 6"	0.08	25
RG-2	91-180	TITUS	355RL	10" x 10"	8" x 8"	0.08	25
RG-3	181-280	TITUS	355RL	12" x 12"	10" x 10"	0.08	25
RG-4	281-400	TITUS	355RL	14" x 14"	12" x 12"	0.08	25
RG-5	401-530	TITUS	355RL	16" x 16"	14" x 14"	0.08	25
RG-6	531-700	TITUS	355RL	18" x 18"	16" x 16"	0.08	25
RG-7	701-900	TITUS	355RL	20" x 20"	18" x 18"	0.08	25
RG-8	901-1050	TITUS	355RL	22" x 22"	20" x 20"	0.08	25
RG-9	2010	TITUS	355RL	48" x 18"	-	0.08	25
EG-1	0 - 95	TITUS	355RL	8" x 8"	6" x 6"	0.08	25
EG-2	96 - 130	TITUS	355RL	10" x 8"	8" x 6"	0.08	25
EG-3	131 - 170	TITUS	355RL	12" x 8"	10" x 6"	0.08	25
EG-4	171 - 185	TITUS	355RL	10" x 10"	8" x 8"	0.08	25
EG-5	186 - 205	TITUS	355RL	14" x 8"	12" x 6"	0.08	25
EG-6	206 - 240	TITUS	355RL	16" x 8"	14" x 6"	0.08	25
EG-7	241 - 285	TITUS	355RL	14" x 10"	12" x 8"	0.08	25
EG-8	286 - 295	TITUS	355RL	12" x 12"	10" x 10"	0.08	25
EG-9	296 - 315	TITUS	355RL	20" x 8"	18" x 6"	0.08	25
EG-10	316 - 360	TITUS	355RL	14" x 12"	12" x 10"	0.08	25
EG-11	361 - 385	TITUS	355RL	24" x 8"	22" x 6"	0.08	25
EG-12	386 - 440	TITUS	355RL	32" x 8"	30" x 6"	0.08	25
EG-13	500	TITUS	355RL	24" x 24"	-	0.08	25

AGENCY

FLEWELLING & MOODY
architecture planning interiors

HEADQUARTERS OFFICE:
99 S. Lake Avenue, Suite 300
Pasadena, CA 91101
Phone: 323.543.8300
E-Mail: fm-pasadena@flewelling-moody.com

ANTELOPE VALLEY OFFICE:
1035 West Lancaster Bouldvard
Lancaster, California 93534
Phone: 661.949.0771
E-Mail: fm-lancaster@flewelling-moody.com

An Employee Owned Corporation

ARCHITECT

CONSULTANT

Budlong
An MBE|SBE|DBE|LSBE Firm
Glendale|Downtown LA|Fremont|Camarillo
W W W . B U D L O N G . C O M
Job No. 23-140

REGISTERED PROFESSIONAL ENGINEER
CLINT PATEL
No. 29448
EXP. 06-30-25
MECHANICAL
STATE OF CALIFORNIA

Drawn by: Author

Check by: Checker

Revisions

No.	Date	Description
	01/26/24	100% DD
	03/01/24	50% CD
	05/09/24	90% CD
	08/05/24	100% CD
	11/25/24	100% CD V2
	01/31/25	100% CD V3
1	08/27/2025	BID ALTERNATE

All dimensions must be checked at the job by the contractor who accepts full responsibility for their accuracy under the contract. These plans & the specifications in connection therewith have been prepared for a specific site. Any and all responsibility for their use in whole or in part on any other site is hereby declaimed by Flewelling & Moody.

CITY OF RIDGECREST

SGT. JOHN PINNEY MEMORIAL POOL REPLACEMENT

205 S WARNER ST, RIDGECREST, CA 93555

Drawing Title

MECHANICAL SCHEDULES

Job No. 3055-0000

Sheet No. **M0.04A7**

Date 08/07/2024

REFRIGERANT CONCENTRATION LIMIT CALCULATIONS

SR. NO.	ROOM NAME	SERVING UNIT	AREA (ft^2)	CEILING HEIGHT (ft)	VOLUME (ft^3)	REFRIGERANT					COMPLIES	REMARKS
						TYPE	SYSTEM	SYSTEM VOLUME (LBS)	ALLOWED QTY / 1000 ft^3 (LBS)	VOLUME IN ROOM / 1000 ft^3 (LBS)		
1	LOBBY AND FRONT DESK	FCU-1	1079.74	12	12956.88	R-410A	CU-1	36.61	26	2	YES	-
2	ADMINISTRATION OFFICE	FCU-2	122	9	1098	R-410A	CU-1	36.61	26	33	NO	AIR TRANSFER DUCT IS PROVIDED TO COMPLY.
3	SICK BAY	FCU-3	88	9	792	R-410A	CU-1	36.61	26	46	NO	RELIEF GRILLE IS PROVIDED TO COMPLY.
4	LIFE GUARD FACILITIES	FCU-4	168	9	1512	R-410A	CU-1	36.61	26	24	YES	-
5	CORRIDOR	FCU-4	202.11	9	1818.99	R-410A	CU-1	36.61	26	20	YES	-
6	CORRIDOR	FCU-5 & FCU-6	202.11	9	1818.99	R-410A	CU-2	23.26	26	12	YES	-
7	EMPLOYEE SHOWER ROOM	FCU-5 & FCU-6	67	9	603	R-410A	CU-2	23.26	26	38	NO	EXHAUST AIR GRILLE IS PROVIDED TO COMPLY.
8	MALE RESTROOM & LOKER ROOM	FCU-5 & FCU-6	559	9	5031	R-410A	CU-2	23.26	26	4	YES	-
9	FEMALE RESTROOM & LOCKER ROOM	FCU-5 & FCU-6	629	9	5661	R-410A	CU-2	23.26	26	4	YES	-
10	SERVICE KITCHEN	FCU-5 & FCU-6	205	9	1845	R-410A	CU-2	23.26	26	12	YES	-
11	COMMUNITY ROOM	FCU-5 & FCU-6	792	9.75	7722	R-410A	CU-2	23.26	26	3	YES	-

VENTILATION RATE CALCULATIONS PER CMC TABLE 402.1

SR. NO.	ROOM NAME	SERVING UNIT	AREA (ft^2)	OUTDOOR AIRFLOW RATE (CFM / ft^2)	AIRFLOW (CFM)	DEFAULT OCCUPANCY (PPL / 1000 ft^2)	AIRFLOW (CFM)	TOTAL OSA REQUIRED	TITLE-24	OSA PROVIDED PER SCHEDULE	COMPLIES
1	LEVEL 1 - FRONT DESK	FCU-1	1079.74	0.06	64.78	10	53.98	118.8	225.0	225.0	YES
2	LEVEL 1 - ADMINISTRATION OFFICE	FCU-2	122	0.06	7.32	5	3.05	10.4	17.8	20.0	YES
3	LEVEL 1 - SICK BAY	FCU-3	88	0.06	5.28	5	2.2	7.5	15.0	212.0	YES
4	LEVEL 1 - LIFE GUARD FACILITIES AND CORRIDOR	FCU-4	168	0.06	10.08	5	4.2	14.3	80.1	215.0	YES
5	LEVEL 1 - COMMUNITY ROOM	FCU-5 & FCU-6	792	0.06	47.52	120	475.2	522.7	375.0	550.0	YES
6	LEVEL 1 - SERVICE KITCHEN	FCU-7	205	0.06	24.6	20	20.5	45.1	94.5	230.0	YES

AGENCY

REVIEWED FOR CODE COMPLIANCE BY: WILLDAN ENGINEERING

Approval of these plans & specifications shall not be construed to be a permit for, or an approval of any violation of any Federal, State, County or City laws or ordinances. One set of approved plans must be kept on the job until completion.

9:27:09 AM Jul 21, 2025

FLEWELLING & MOODY
architecture planning interiors

HEADQUARTERS OFFICE:
99 S. Lake Avenue, Suite 300
Pasadena, CA 91101
Phone: 323.543.8300
E-Mail: fm-pasadena@flewelling-moody.com

ANTELOPE VALLEY OFFICE:
1035 West Lancaster Boulevard
Lancaster, California 93534
Phone: 661.949.0771
E-Mail: fm-lancaster@flewelling-moody.com

An Employee Owned Corporation

ARCHITECT

CONSULTANT

Budlong
An MBE|SBE|DBE|LSBE Firm
Glendale|Downtown LA|Fremont|Camarillo
W W W . B U D L O N G . C O M
Job No. 23-140

REGISTERED PROFESSIONAL ENGINEER — CONTI L. PATE — No. 29448 — EXP. 06-30-25 — STATE OF CALIFORNIA

Drawn by: Author

Check by: Checker

Revisions

No.	Date	Description
	01/26/24	100% DD
	03/01/24	50% CD
	05/09/24	90% CD
	08/05/24	100% CD
	11/25/24	100% CD V2
	01/31/25	100% CD V3

All dimensions must be checked at the job by the contractor who accepts full responsibility for their accuracy under the contract. These plans & the specifications in connection therewith have been prepared for a specific site. Any and all responsibility for their use in whole or in part on any other site is hereby disclaimed by Flewelling & Moody.

CITY OF RIDGECREST

SGT. JOHN PINNEY MEMORIAL POOL REPLACEMENT

205 S WARNER ST, RIDGECREST, CA 93555

Drawing Title

MECHANICAL SCHEDULES

Job No. 3055-0100

Date 08/07/2024

Sheet No. **M0.05**

REFRIGERANT CONCENTRATION LIMIT CALCULATIONS

SR. NO.	ROOM NAME	SERVING UNIT	AREA (ft^2)	CEILING HEIGHT (ft)	VOLUME (ft^3)	REFRIGERANT					COMPLIES	REMARKS
						TYPE	SYSTEM	SYSTEM VOLUME (LBS)	ALLOWED QTY / 1000 ft^3 (LBS)	VOLUME IN ROOM / 1000 ft^3 (LBS)		
1	LOBBY AND FRONT DESK	FCU-1	1079.74	12	12956.88	R-410A	CU-1	36.61	26	2	YES	-
2	ADMINISTRATION OFFICE	FCU-2	122	9	1098	R-410A	CU-1	36.61	26	33	NO	AIR TRANSFER DUCT IS PROVIDED TO COMPLY.
3	SICK BAY	FCU-3	88	9	792	R-410A	CU-1	36.61	26	46	NO	RELIEF GRILLE IS PROVIDED TO COMPLY.
4	LIFE GUARD FACILITIES	FCU-4	168	9	1512	R-410A	CU-1	36.61	26	24	YES	-
5	CORRIDOR	FCU-4	202.11	9	1818.99	R-410A	CU-1	36.61	26	20	YES	-

VENTILATION RATE CALCULATIONS PER CMC TABLE 402.1

SR. NO.	ROOM NAME	SERVING UNIT	AREA (ft^2)	OUTDOOR AIRFLOW RATE (CFM / ft^2)	AIRFLOW (CFM)	DEFAULT OCCUPANCY (PPL / 1000 ft^2)	AIRFLOW (CFM)	TOTAL OSA REQUIRED	TITLE-24	OSA PROVIDED PER SCHEDULE	COMPLIES
1	LEVEL 1 - FRONT DESK	FCU-1	1079.74	0.06	64.78	10	53.98	118.8	225.0	225.0	YES
2	LEVEL 1 - ADMINISTRATION OFFICE	FCU-2	122	0.06	7.32	5	3.05	10.4	17.8	20.0	YES
3	LEVEL 1 - SICK BAY	FCU-3	88	0.06	5.28	5	2.2	7.5	15.0	212.0	YES
4	LEVEL 1 - LIFE GUARD FACILITIES AND CORRIDOR	FCU-4	168	0.06	10.08	5	4.2	14.3	80.1	215.0	YES
5	LEVEL 1 - SERVICE KITCHEN	FCU-7	205	0.06	24.6	20	20.5	45.1	94.5	230.0	YES

AGENCY

FLEWELLING & MOODY
architecture planning interiors

HEADQUARTERS OFFICE:
99 S. Lake Avenue, Suite 300
Pasadena, CA 91101
Phone: 323.543.8300
E-Mail: fm-pasadena@flewelling-moody.com

ANTELOPE VALLEY OFFICE:
1035 West Lancaster Boulevard
Lancaster, California 93534
Phone: 661.949.0771
E-Mail: fm-lancaster@flewelling-moody.com

An Employee Owned Corporation

ARCHITECT

CONSULTANT

Budlong
An MBE|SBE|DBE|LSBE Firm
Glendale|Downtown LA|Fremont|Camarillo
W W W . B U D L O N G . C O M
Job No. 23-140

REGISTERED PROFESSIONAL ENGINEER
CONTI. PATEL
No. 29448
EXP. 06-30-25
STATE OF CALIFORNIA

Drawn by: Author

Check by: Checker

Revisions

No.	Date	Description
	01/26/24	100% DD
	03/01/24	50% CD
	05/09/24	90% CD
	08/05/24	100% CD
	11/25/24	100% CD V2
	01/31/25	100% CD V3
1	08/27/2025	BID ALTERNATE

All dimensions must be checked at the job by the contractor who accepts full responsibility for their accuracy under the contract. These plans & the specifications in connection therewith have been prepared for a specific site. Any and all responsibility for their use in whole or in part on any other site is hereby disclaimed by Flewelling & Moody.

CITY OF RIDGECREST

SGT. JOHN PINNEY MEMORIAL POOL REPLACEMENT

205 S WARNER ST, RIDGECREST, CA 93555

Drawing Title

MECHANICAL SCHEDULES

Job No. 3055-0000

Date 08/07/2024

Sheet No. **M0.05A6**

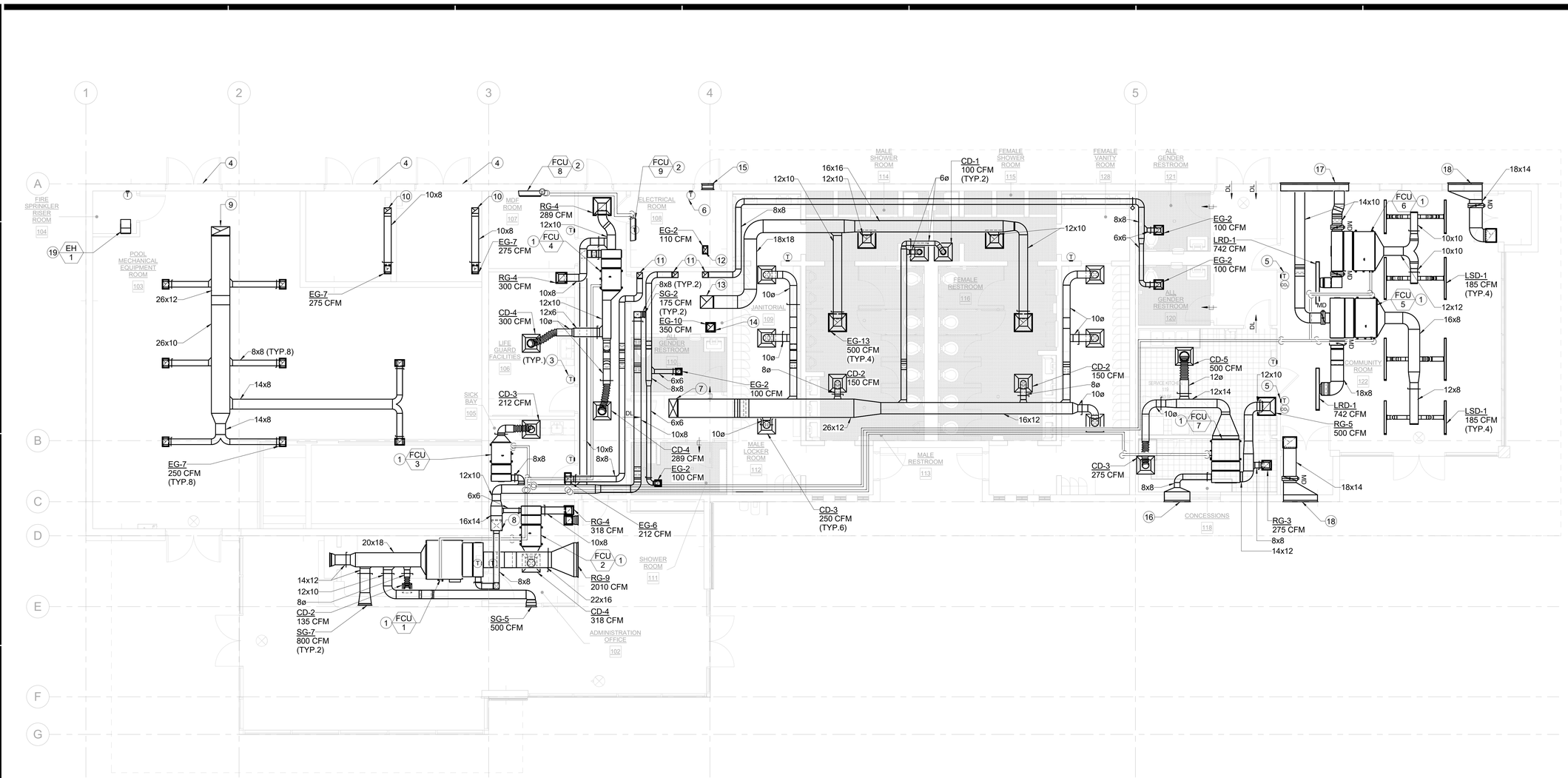

MECHANICAL COMMUNITY BUILDING FLOOR PLAN

SCALE: 3/16" = 1'-0"

1 / M2.01

N

CONSTRUCTION KEYNOTES

1. INSTALL DUCTED FAN COIL UNIT WITH ALL RELATED ACCESSORIES PER SCHEDULE. REFER SHEET M0.03.
2. INSTALL HIGHWALL FAN COIL UNIT WITH ALL RELATED ACCESSORIES PER SCHEDULE. REFER SHEET M0.03.
3. PROVIDE THERMOSTAT WITH ALL RELATED ACCESSORIES. REFER DETAIL 5/M6.03.
4. PROVIDE ARCHITECTURAL LOUVERED DOOR.
5. INSTALL NEW THERMOSTAT WITH COMBINED CO2 SENSOR. REFER DETAIL 5/M6.03.
6. PROVIDE VARI-FLOW TEMPERATURE CONTROLLER (VFTC) TO CONTROL THE EXHAUST FAN.
7. 26" x 12" SUPPLY AIR DUCT UP THROUGH ROOF.
8. 16" x 14" OUTSIDE AIR DUCT UP THROUGH ROOF.
9. 26" x 12" EXHAUST AIR DUCT UP THROUGH ROOF.
10. 10" x 8" EXHAUST AIR DUCT UP THROUGH ROOF.
11. 8" x 8" EXHAUST AIR DUCT UP THROUGH ROOF.
12. 6" x 6" EXHAUST AIR DUCT UP THROUGH ROOF.
13. 18" x 18" EXHAUST AIR DUCT UP THROUGH ROOF.
14. 10" x 10" EXHAUST AIR DUCT UP THROUGH ROOF.
15. 16" x 10" OSA DOOR LOUVER FOR 110 CFM @ 300 FPM.
16. 36" x 8" OUTSIDE AIR LOUVER FOR 230 CFM @ 300 FPM.
17. 96" x 16" OUTSIDE AIR LOUVER FOR 1484 CFM @ 315 FPM.
18. 48" x 16" RELIEF AIR LOUVER FOR 742 CFM @ 375 FPM.
19. INSTALL CEILING SUSPENDED ELECTRIC HEATER UNIT WITH ALL RELATED ACCESSORIES PER SCHEDULE.

SEQUENCE OF OPERATION FOR FCU - 05 AND FCU - 06

WHEN CO_2 VALUE GOES ABOVE (1000 PPM) (ADJUSTABLE) THE OUTSIDE AIR DAMPER AND EXHAUST AIR DAMPER OPENS MORE AND RETURN AIR DAMPER RESPECTIVELY CLOSES. THE PRESSURE INSIDE THE SUPPLY AIR DUCTWORK REMAINS CONSTANT.

VENTILATION CALCULATIONS

1. JANITORIAL ROOM VENTILATION CALCULATION INCLUDING 5 WHs:-

   WATER HEATER BTU/HR = 398000 + 597000 = 995000

   CONSIDERING 0.35 CFM PER 1000 BTU/HR

   VENTILATION CFM = (995000 x 0.35) / 1000 = 348.25 ≈ 350 CFM

2. POOL MECHANICAL EQUIPMENT ROOM VENTILATION CALCULATION OF POOL BOILERS:-

   MECHANICAL EQUIPMENT'S BTU/HR = (2 x1500000) + 1250000 + 750000 = 5000000

   CONSIDERING 0.35 CFM PER 1000 BTU/HR

   VENTILATION CFM = (5000000 x 0.35) / 1000 = 1750 CFM

AGENCY

REVIEWED FOR CODE COMPLIANCE BY: WILLDAN ENGINEERING

Approval of these plans & specifications shall not be construed to be a permit for, or an approval of any violation of any Federal, State, County or City laws or ordinances. One set of approved plans must be kept on the job until completion.

9:27:11 AM Jul 21, 2025

FLEWELLING & MOODY
architecture planning interiors

HEADQUARTERS OFFICE:
99 S. Lake Avenue, Suite 300
Pasadena, CA 91101
Phone: 323.543.8300
E-Mail: fm-pasadena@flewelling-moody.com

ANTELOPE VALLEY OFFICE:
1035 West Lancaster Boulevard
Lancaster, California 93534
Phone: 661.949.0771
E-Mail: fm-lancaster@flewelling-moody.com

An Employee Owned Corporation

ARCHITECT

CONSULTANT

Budlong
An MBE|SBE|DBE|LSBE Firm
Glendale|Downtown LA|Fremont|Camarillo
WWW.BUDLONG.COM
Job No. 23-140

REGISTERED PROFESSIONAL ENGINEER SUNIL PATEL No. 29448 EXP. 06-30-25 MECHANICAL STATE OF CALIFORNIA

Drawn by: Author

Check by: Checker

Revisions

No.	Date	Description
	01/26/24	100% DD
	03/01/24	50% CD
	05/09/24	90% CD
	08/05/24	100% CD
	11/25/24	100% CD V2
	01/31/25	100% CD V3

All dimensions must be checked at the job by the contractor who accepts full responsibility for their accuracy under the contract. These plans & the specifications in connection therewith have been prepared for a specific site. Any and all responsibility for their use in whole or in part on any other site is hereby disclaimed by Flewelling & Moody.

CITY OF RIDGECREST

SGT. JOHN PINNEY MEMORIAL POOL REPLACEMENT

205 S WARNER ST, RIDGECREST, CA 93555

Drawing Title

MECHANICAL COMMUNITY BUILDING FLOOR PLAN

Job No. 3055-0100

Date 08/07/2024

Sheet No. **M2.01**

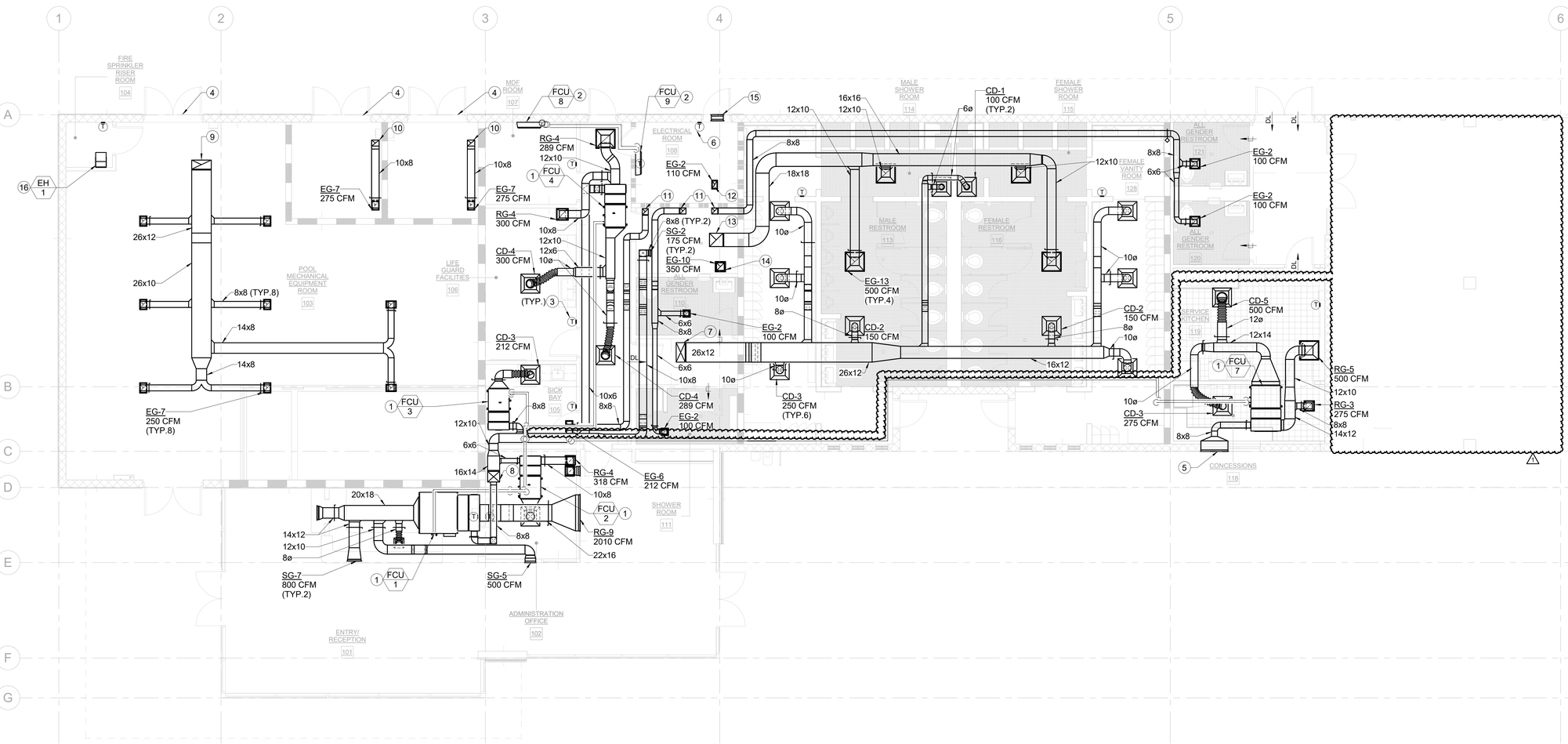

MECHANICAL COMMUNITY BUILDING FLOOR PLAN ALT 6

SCALE: 3/16" = 1'-0"

1 / M2.01A6

N

CONSTRUCTION KEYNOTES

1. INSTALL DUCTED FAN COIL UNIT WITH ALL RELATED ACCESSORIES PER SCHEDULE. REFER SHEET M0.03.
2. INSTALL HIGHWALL FAN COIL UNIT WITH ALL RELATED ACCESSORIES PER SCHEDULE. REFER SHEET M0.03.
3. PROVIDE THERMOSTAT WITH ALL RELATED ACCESSORIES. REFER DETAIL 5/M6.03.
4. PROVIDE ARCHITECTURAL LOUVERED DOOR.
5. 36" x 8" OUTSIDE AIR LOUVER FOR 230 CFM @ 300 FPM. (1)
6. PROVIDE VARI-FLOW TEMPERATURE CONTROLLER (VFTC) TO CONTROL THE EXHAUST FAN.
7. 26" x 12" SUPPLY AIR DUCT UP THROUGH ROOF.
8. 16" x 14" OUTSIDE AIR DUCT UP THROUGH ROOF.
9. 26" x 12" EXHAUST AIR DUCT UP THROUGH ROOF.
10. 10" x 8" EXHAUST AIR DUCT UP THROUGH ROOF.
11. 8" x 8" EXHAUST AIR DUCT UP THROUGH ROOF.
12. 6" x 6" EXHAUST AIR DUCT UP THROUGH ROOF.
13. 18" x 18" EXHAUST AIR DUCT UP THROUGH ROOF.
14. 10" x 10" EXHAUST AIR DUCT UP THROUGH ROOF.
15. 16" x 10" OSA DOOR LOUVER FOR 110 CFM @ 300 FPM.
16. INSTALL CEILING SUSPENDED ELECTRIC HEATER UNIT WITH ALL RELATED ACCESSORIES PER SCHEDULE. (1)

(1)

VENTILATION CALCULATIONS

1. JANITORIAL ROOM VENTILATION CALCULATION INCLUDING 5 WHs:-

   WATER HEATER BTU/HR = 398000 + 597000 = 995000

   CONSIDERING 0.35 CFM PER 1000 BTU/HR

   VENTILATION CFM = (995000 x 0.35) / 1000 = 348.25 ≈ 350 CFM

2. POOL MECHANICAL EQUIPMENT ROOM VENTILATION CALCULATION OF POOL BOILERS:-

   MECHANICAL EQUIPMENT'S BTU/HR = (2 x1500000) + 1250000 + 750000 = 5000000

   CONSIDERING 0.35 CFM PER 1000 BTU/HR

   VENTILATION CFM = (5000000 x 0.35) / 1000 = 1750 CFM

AGENCY

FLEWELLING & MOODY
architecture planning interiors

HEADQUARTERS OFFICE:
99 S. Lake Avenue, Suite 300
Pasadena, CA 91101
Phone: 323.543.8300
E-Mail: fm-pasadena@flewelling-moody.com

ANTELOPE VALLEY OFFICE:
1035 West Lancaster Bouldvard
Lancaster, California 93534
Phone: 661.949.0771
E-Mail: fm-lancaster@flewelling-moody.com

An Employee Owned Corporation

ARCHITECT

CONSULTANT

Budlong
An MBE|SBE|DBE|LSBE Firm
Glendale|Downtown LA|Fremont|Camarillo
WWW.BUDLONG.COM
Job No. 23-140

REGISTERED PROFESSIONAL ENGINEER SUNIL PATEL No. 29448 EXP. 06-30-25 STATE OF CALIFORNIA

Drawn by: Author

Check by: Checker

Revisions

No.	Date	Description
	01/26/24	100% DD
	03/01/24	50% CD
	05/09/24	90% CD
	08/05/24	100% CD
	11/25/24	100% CD V2
	01/31/25	100% CD V3
1	08/27/2025	BID ALTERNATE

All dimensions must be checked at the job by the contractor who accepts full responsibility for their accuracy under the contract. These plans & the specifications in connection therewith have been prepared for a specific site. Any and all responsibility for their use in whole or in part on any other site is hereby disclaimed by Flewelling & Moody.

CITY OF RIDGECREST

SGT. JOHN PINNEY MEMORIAL POOL REPLACEMENT

205 S WARNER ST, RIDGECREST, CA 93555

Drawing Title

MECHANICAL COMMUNITY BUILDING FLOOR PLAN ALT 6

Job No. 3055-0000

Sheet No. **M2.01A6**

Date 08/07/2024

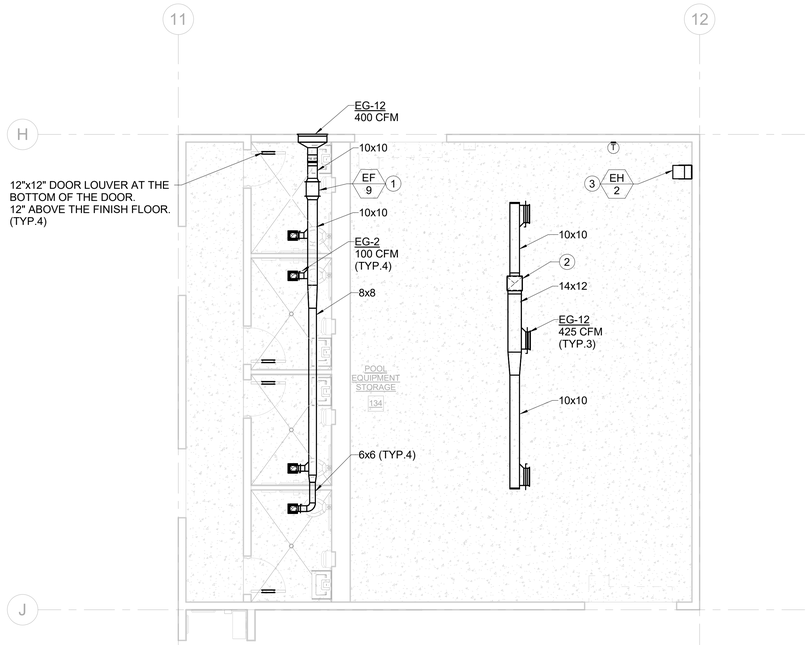

MECHANICAL EQUIPMENT STORAGE FLOOR PLAN

SCALE: 3/16" = 1'-0"

1 / M2.02

N

CONSTRUCTION KEYNOTES

1. INSTALL EXHUAST FAN WITH ALL RELATED ACCESSORIES PER SCHEDULE.
2. 16" x 14" EXHAUST AIR DUCT UP THROUGH ROOF.
3. INSTALL CEILING SUSPENDED ELECTRIC HEATER UNIT WITH ALL RELATED ACCESSORIES PER SCHEDULE.

AGENCY

REVIEWED FOR CODE COMPLIANCE BY: WILLDAN ENGINEERING

Approval of these plans & specifications shall not be construed to be a permit for, or an approval of any violation of any Federal, State, County or City laws or ordinances. One set of approved plans must be kept on the job until completion.

9:27:12 AM Jul 21, 2025

FLEWELLING & MOODY
architecture planning interiors

HEADQUARTERS OFFICE:
99 S. Lake Avenue, Suite 300
Pasadena, CA 91101
Phone: 323.543.8300
E-Mail: fm-pasadena@flewelling-moody.com

ANTELOPE VALLEY OFFICE:
1035 West Lancaster Bouldvard
Lancaster, California 93534
Phone: 661.949.0771
E-Mail: fm-lancaster@flewelling-moody.com

An Employee Owned Corporation

ARCHITECT

CONSULTANT

Budlong
An MBE|SBE|DBE|LSBE Firm
Glendale|Downtown LA|Fremont|Camarillo
W W W . B U D L O N G . C O M
Job No. 23-140

REGISTERED PROFESSIONAL ENGINEER
CHRISTOPHER J. PATE
No. 29448
EXP. 06-30-25
STATE OF CALIFORNIA

Drawn by: Author

Check by: Checker

Revisions

No.	Date	Description
	01/26/24	100% DD
	03/01/24	50% CD
	05/09/24	90% CD
	08/05/24	100% CD
	11/25/24	100% CD V2
	01/31/25	100% CD V3

All dimensions must be checked at the job by the contractor who accepts full responsibility for their accuracy under the contract. These plans & the specifications in connection therewith have been prepared for a specific site. Any and all responsibility for their use in whole or in part on any other site is hereby disclaimed by Flewelling & Moody.

CITY OF RIDGECREST

SGT. JOHN PINNEY MEMORIAL POOL REPLACEMENT

205 S WARNER ST, RIDGECREST, CA 93555

Drawing Title

MECHANICAL EQUIPMENT STORAGE FLOOR PLAN

Job No. 3055-0100

Sheet No. **M2.02**

Date 08/07/2024

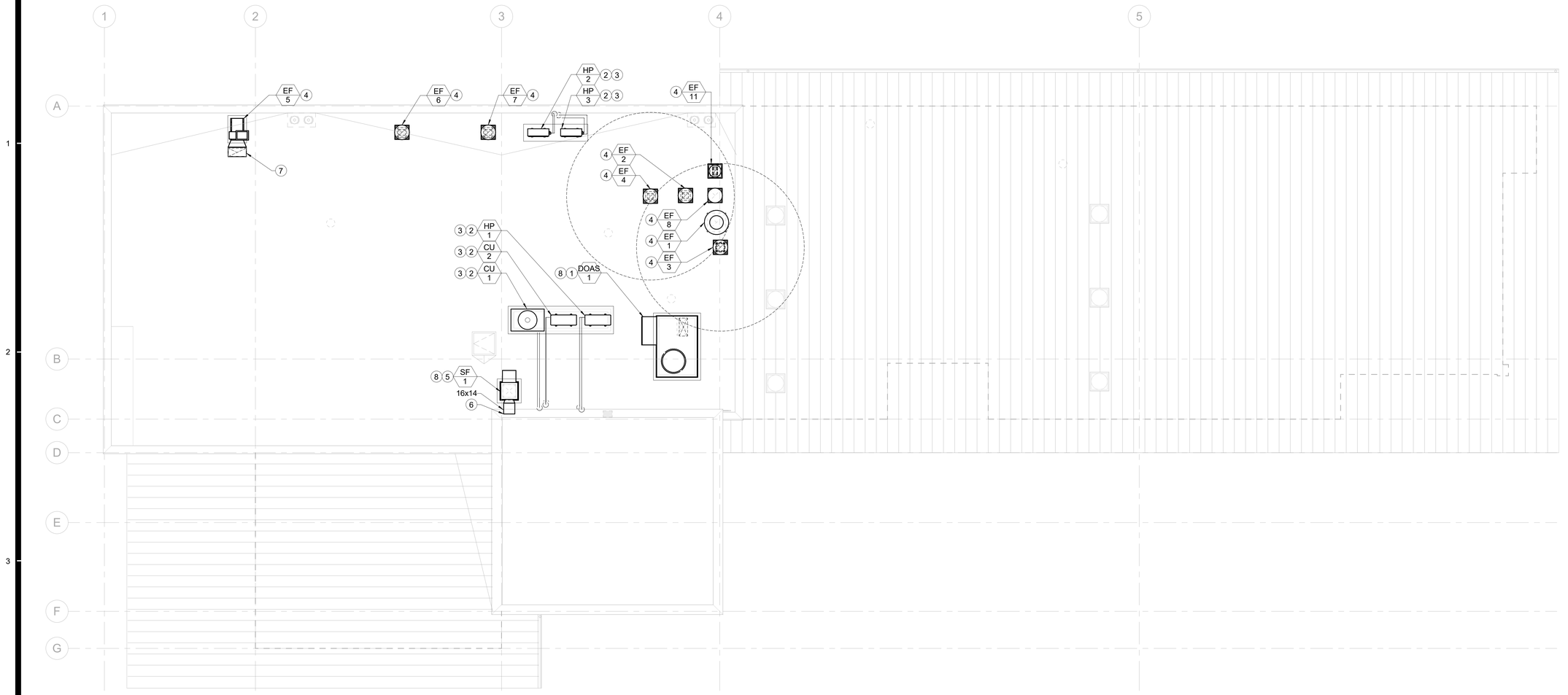

MECHANICAL COMMUNITY BUILDING ROOF PLAN

SCALE: 3/16" = 1'-0"

1 / M2.03

N

CONSTRUCTION KEYNOTES

1. PROVIDE DEDICATED OUTSIDE AIR UNIT WITH ALL RELATED ACCESSORIES PER SCHEDULE. DOAS UNIT ABOVE 6" STRUCTURAL FRAMED ROOF CURB AND 18" MICROMELT WITH VIBRATION ISOLATION. PRO2VIDE 2" DEEP GALVANIZED CONDENSING PAN WITH DISCHARGE PIPE TO THE ROOF RECEPTOR. PROVIDE DISCONNECT SWITCH.
2. PROVIDE HEAT PUMP UNIT WITH ALL RELATED ACCESSORIES PER SCHEDULE.
3. PROVIDE 4" TALL HOUSEKEEPING PAD FOR HEAT PUMP. PROVIDE 0.5" RUBBER VIBRATION ISOLATION UNDER THE UNITS. PROVIDE DISCONNECT SWITCH.
4. PROVIDE ROOF MOUNTED EXHAUST FAN WITH ALL RELATED ACCESSORIES PER SCHEDULE.
5. PROVIDE SUPPLY FAN WITH ALL RELATED ACCESSORIES PER SCHEDULE.
6. 14" x 16" OSA DUCT DOWN THROUGH ROOF.
7. 26" x 12" EXHAUST AIR DUCT DOWN THROUGH ROOF.
8. PROVIDE 4 INCHES TALL HOUSEKEEOING PAD FOR UNIT MOUNTING.

DOAS UNIT SEQUENCE OF OPERATION

- THE UNIT SHALL BE CONSTRUCTED SO THAT IT CAN FUNCTION AS A STAND-ALONE HEATING AND COOLING SYSTEM CONTROLLED BY FACTORY SUPPLIED CONTROLLERS,THERMOSTATS AND / OR SENSORS. THE UNIT SHALL BE CONTROLLED BY A FACTORY-INSTALLED MICROPROCESSOR PROGRAMMABLE CONTROLLER (DDC) THAT IS CONNECTED TO VARIOUS OPTIONAL SENSORS TO CONTROL ITS OPERATION BY ONE OF THE FOLLOWING TWO SEQUENCES.

PROCESS CONTROLLED

- IN THE UNOCCUPIED MODE, THE OUTSIDE AIR UNIT WILL BE OFF AND THE OUTSIDE AIR DAMPER, IF SUPPLIED, WILL BE CLOSED. OCCUPIED OR UNOCCUPIED IS SIGNALED TO THE IAIRE CONTROLLER VIA A NORMALLY OPEN OR NORMALLY CLOSED CONTACT ON THE OCCUPIED INPUT WITH A CLOCK OR SWITCH. AN OPEN CONTACT ON THE INPUT INDICATES OCCUPIED, A CLOSED CONTACT INDICATES UNOCCUPIED.
- IN THE OCCUPIED MODE, THE OUTSIDE AIR DAMPER WILL OPEN AND THE SUPPLY FAN WILL RAMP UP TO THE CONFIGURED FAN SPEED (DEPENDENT ON WHETHER THE UNIT IS HEATING OR COOLING). THE FAN INPUT IS MONITORED TO DETERMINE IF THE FAN IS OPERATING OR NOT. IF NOT OPERATING, THE IAIRE CONTROLLER WILL ENTER INTO AN ALARM STATE, STAGE OFF COOLING OR HEATING AND ATTEMPT TO CYCLE THE FAN UNTIL IT STARTS.
- THERE IS A CONFIGURABLE EAT HEAT LOCKOUT (DEFAULT 58F). IF THE ENTERING AIR TEMPERATURE (EAT) IS LESS THAN OR EQUAL TO THE LOCKOUT, THEN THE HEAT STAGES WILL CYCLE TO MAINTAIN THE DISCHARGE AIR TEMPERATURE AND SPACE TEMPERATURE SET-POINT.
- THERE IS A CONFIGURABLE EAT COOL LOCKOUT (DEFAULT 61F). IF THE EAT IS MORE THAN OR EQUAL TO THIS LOCKOUT THEN Y1 IS ALWAYS ON AND Y2-Y4 IS STAGED ON DEPENDING ON DEMAND (IF ENABLED). THE MODULATING HOT GAS REHEAT CYCLE WILL BE USED TO MAINTAIN THE SPACE TEMPERATURE.
- IF THE EAT IS GREATER THAN THE EAT HEAT LOCKOUT (DEFAULT 58F) AND LESS THAN THE EAT COOL LOCKOUT (DEFAULT 61F), Y1 WILL TURN ON AND THE MODULATING HOT GAS REHEAT CYCLE WILL BE USED TO MAINTAIN SPACE TEMPERATURE. IF EAT LESS THAN SPACE TEMPERATURE AND SPACE TEMPERATURE IS GREATER THAN THE SET-POINT, FREE-COOLING WILL ENGAGE AND Y1 WILL BE OFF. WHILE IN THIS MODE, IF SPACE HUMIDITY IS > 50% THEN Y1 WILL STAGE ON AND IF ITS > 70% THEN Y2 WILL STAGE ON AS WELL. THE MODULATING HOT GAS REHEAT CYCLE WILL BE USED TO MAINTAIN SPACE TEMPERATURE.

AGENCY

REVIEWED FOR CODE COMPLIANCE BY: WILLDAN ENGINEERING

Approval of these plans & specifications shall not be construed to be a permit for, or an approval of any violation of any Federal, State, County or City laws or ordinances. One set of approved plans must be kept on the job until completion.

9:27:14 AM Jul 21, 2025

FLEWELLING & MOODY
architecture planning interiors

HEADQUARTERS OFFICE:
99 S. Lake Avenue, Suite 300
Pasadena, CA 91101
Phone: 323.543.8300
E-Mail: fm-pasadena@flewelling-moody.com

ANTELOPE VALLEY OFFICE:
1035 West Lancaster Bouldvard
Lancaster, California 93534
Phone: 661.949.0771
E-Mail: fm-lancaster@flewelling-moody.com

An Employee Owned Corporation

ARCHITECT

CONSULTANT

Budlong
An MBE|SBE|DBE|LSBE Firm
Glendale|Downtown LA|Fremont|Camarillo
W W W . B U D L O N G . C O M
Job No. 23-140

REGISTERED PROFESSIONAL ENGINEER — CURTIS L. PATZ — No. 29448 — EXP. 06-30-25 — STATE OF CALIFORNIA

Drawn by: Author

Check by: Checker

Revisions

No.	Date	Description
	01/26/24	100% DD
	03/01/24	50% CD
	05/09/24	90% CD
	08/05/24	100% CD
	11/25/24	100% CD V2
	01/31/25	100% CD V3

All dimensions must be checked at the job by the contractor who accepts full responsibility for their accuracy under the contract. These plans & the specifications in connection therewith have been prepared for a specific site. Any and all responsibility for their use in whole or in part on any other site is hereby disclaimed by Flewelling & Moody.

CITY OF RIDGECREST

SGT. JOHN PINNEY MEMORIAL POOL REPLACEMENT

205 S WARNER ST, RIDGECREST, CA 93555

Drawing Title

MECHANICAL COMMUNITY BUILDING ROOF PLAN

Job No. 3055-0100

Sheet No. **M2.03**

Date 08/07/2024

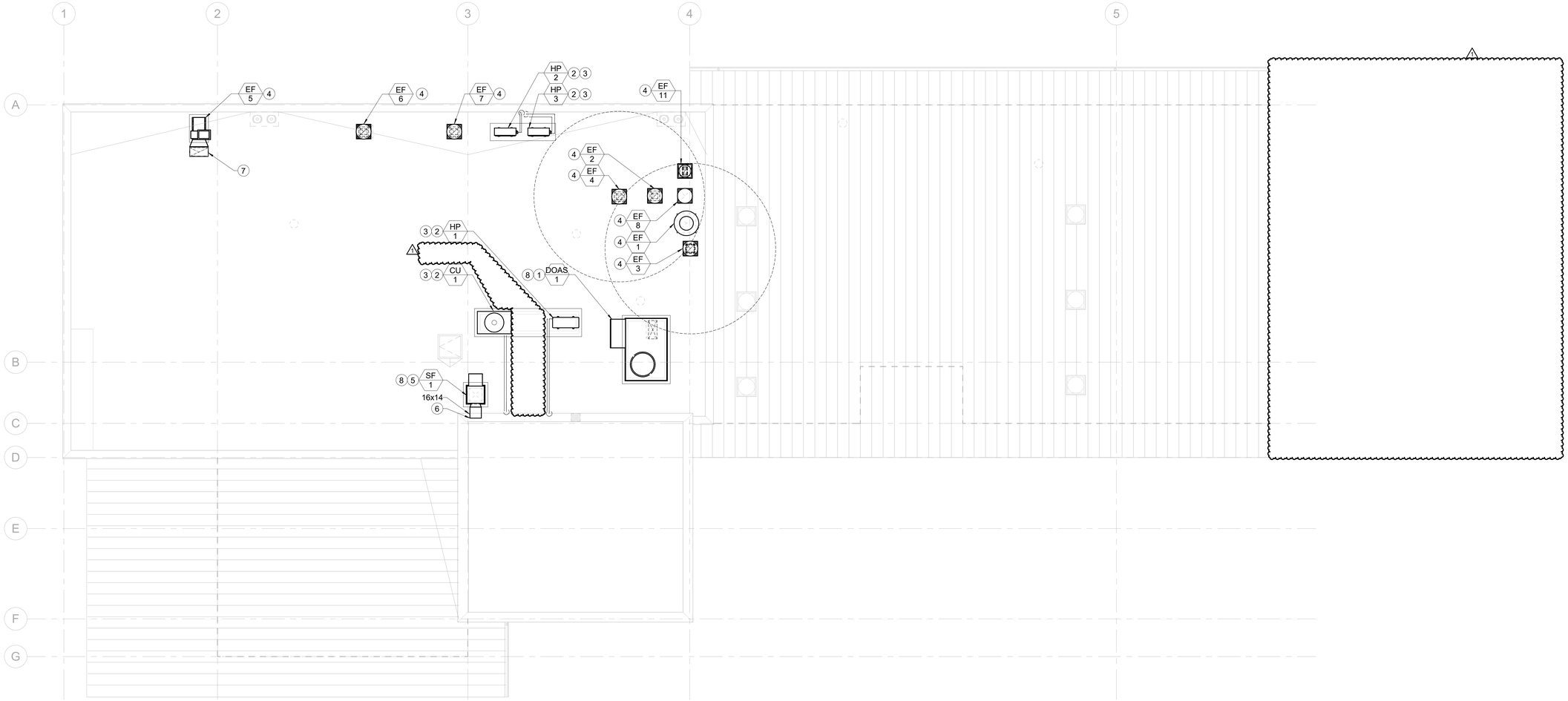

MECHANICAL COMMUNITY BUILDING ROOF PLAN ALT 6

SCALE: 3/16" = 1'-0"

1 M2.03A6

N

CONSTRUCTION KEYNOTES

1. PROVIDE DEDICATED OUTSIDE AIR UNIT WITH ALL RELATED ACCESSORIES PER SCHEDULE. DOAS UNIT ABOVE 6" STRUCTURAL FRAMED ROOF CURB AND 18" MICROMELT WITH VIBRATION ISOLATION. PRO2VIDE 2" DEEP GALVANIZED CONDENSING PAN WITH DISCHARGE PIPE TO THE ROOF RECEPTOR. PROVIDE DISCONNECT SWITCH.
2. PROVIDE HEAT PUMP UNIT WITH ALL RELATED ACCESSORIES PER SCHEDULE.
3. PROVIDE 4" TALL HOUSEKEEPING PAD FOR HEAT PUMP. PROVIDE 0.5" RUBBER VIBRATION ISOLATION UNDER THE UNITS. PROVIDE DISCONNECT SWITCH.
4. PROVIDE ROOF MOUNTED EXHAUST FAN WITH ALL RELATED ACCESSORIES PER SCHEDULE.
5. PROVIDE SUPPLY FAN WITH ALL RELATED ACCESSORIES PER SCHEDULE.
6. 14" x 16" OSA DUCT DOWN THROUGH ROOF.
7. 26" x 12" EXHAUST AIR DUCT DOWN THROUGH ROOF.
8. PROVIDE 4 INCHES TALL HOUSEKEEOING PAD FOR UNIT MOUNTING.

DOAS UNIT SEQUENCE OF OPERATION

- THE UNIT SHALL BE CONSTRUCTED SO THAT IT CAN FUNCTION AS A STAND-ALONE HEATING AND COOLING SYSTEM CONTROLLED BY FACTORY SUPPLIED CONTROLLERS,THERMOSTATS AND / OR SENSORS. THE UNIT SHALL BE CONTROLLED BY A FACTORY-INSTALLED MICROPROCESSOR PROGRAMMABLE CONTROLLER (DDC) THAT IS CONNECTED TO VARIOUS OPTIONAL SENSORS TO CONTROL ITS OPERATION BY ONE OF THE FOLLOWING TWO SEQUENCES.

PROCESS CONTROLLED

- IN THE UNOCCUPIED MODE, THE OUTSIDE AIR UNIT WILL BE OFF AND THE OUTSIDE AIR DAMPER, IF SUPPLIED, WILL BE CLOSED. OCCUPIED OR UNOCCUPIED IS SIGNALED TO THE IAIRE CONTROLLER VIA A NORMALLY OPEN OR NORMALLY CLOSED CONTACT ON THE OCCUPIED INPUT WITH A CLOCK OR SWITCH. AN OPEN CONTACT ON THE INPUT INDICATES OCCUPIED, A CLOSED CONTACT INDICATES UNOCCUPIED.
- IN THE OCCUPIED MODE, THE OUTSIDE AIR DAMPER WILL OPEN AND THE SUPPLY FAN WILL RAMP UP TO THE CONFIGURED FAN SPEED (DEPENDENT ON WHETHER THE UNIT IS HEATING OR COOLING). THE FAN INPUT IS MONITORED TO DETERMINE IF THE FAN IS OPERATING OR NOT. IF NOT OPERATING, THE IAIRE CONTROLLER WILL ENTER INTO AN ALARM STATE, STAGE OFF COOLING OR HEATING AND ATTEMPT TO CYCLE THE FAN UNTIL IT STARTS.
- THERE IS A CONFIGURABLE EAT HEAT LOCKOUT (DEFAULT 58F). IF THE ENTERING AIR TEMPERATURE (EAT) IS LESS THAN OR EQUAL TO THE LOCKOUT, THEN THE HEAT STAGES WILL CYCLE TO MAINTAIN THE DISCHARGE AIR TEMPERATURE AND SPACE TEMPERATURE SET-POINT.
- THERE IS A CONFIGURABLE EAT COOL LOCKOUT (DEFAULT 61F). IF THE EAT IS MORE THAN OR EQUAL TO THIS LOCKOUT THEN Y1 IS ALWAYS ON AND Y2-Y4 IS STAGED ON DEPENDING ON DEMAND (IF ENABLED). THE MODULATING HOT GAS REHEAT CYCLE WILL BE USED TO MAINTAIN THE SPACE TEMPERATURE.
- IF THE EAT IS GREATER THAN THE EAT HEAT LOCKOUT (DEFAULT 58F) AND LESS THAN THE EAT COOL LOCKOUT (DEFAULT 61F), Y1 WILL TURN ON AND THE MODULATING HOT GAS REHEAT CYCLE WILL BE USED TO MAINTAIN SPACE TEMPERATURE. IF EAT LESS THAN SPACE TEMPERATURE AND SPACE TEMPERATURE IS GREATER THAN THE SET-POINT, FREE-COOLING WILL ENGAGE AND Y1 WILL BE OFF. WHILE IN THIS MODE, IF SPACE HUMIDITY IS > 50% THEN Y1 WILL STAGE ON AND IF ITS > 70% THEN Y2 WILL STAGE ON AS WELL. THE MODULATING HOT GAS REHEAT CYCLE WILL BE USED TO MAINTAIN SPACE TEMPERATURE.

AGENCY

FLEWELLING & MOODY
architecture planning interiors

HEADQUARTERS OFFICE:
99 S. Lake Avenue, Suite 300
Pasadena, CA 91101
Phone: 323.543.8300
E-Mail: fm-pasadena@flewelling-moody.com

ANTELOPE VALLEY OFFICE:
1035 West Lancaster Bouldvard
Lancaster, California 93534
Phone: 661.949.0771
E-Mail: fm-lancaster@flewelling-moody.com

An Employee Owned Corporation

ARCHITECT

CONSULTANT

Budlong
An MBE|SBE|DBE|LSBE Firm
Glendale|Downtown LA|Fremont|Camarillo
W W W . B U D L O N G . C O M
Job No. 23-140

REGISTERED PROFESSIONAL ENGINEER
CURTIS L. PATE
No. 29448
EXP. 06-30-25
STATE OF CALIFORNIA

Drawn by: Author

Check by: Checker

Revisions

No.	Date	Description
	01/26/24	100% DD
	03/01/24	50% CD
	05/09/24	90% CD
	08/05/24	100% CD
	11/25/24	100% CD V2
	01/31/25	100% CD V3
1	08/27/2025	BID ALTERNATE

All dimensions must be checked at the job by the contractor who accepts full responsibility for their accuracy under the contract. These plans & the specifications in connection therewith have been prepared for a specific site. Any and all responsibility for their use in whole or in part on any other site is hereby disclaimed by Flewelling & Moody.

CITY OF RIDGECREST

SGT. JOHN PINNEY MEMORIAL POOL REPLACEMENT

205 S WARNER ST, RIDGECREST, CA 93555

Drawing Title

MECHANICAL COMMUNITY BUILDING ROOF PLAN ALT 6

Job No. 3055-0000

Date 08/07/2024

Sheet No. **M2.03A6**

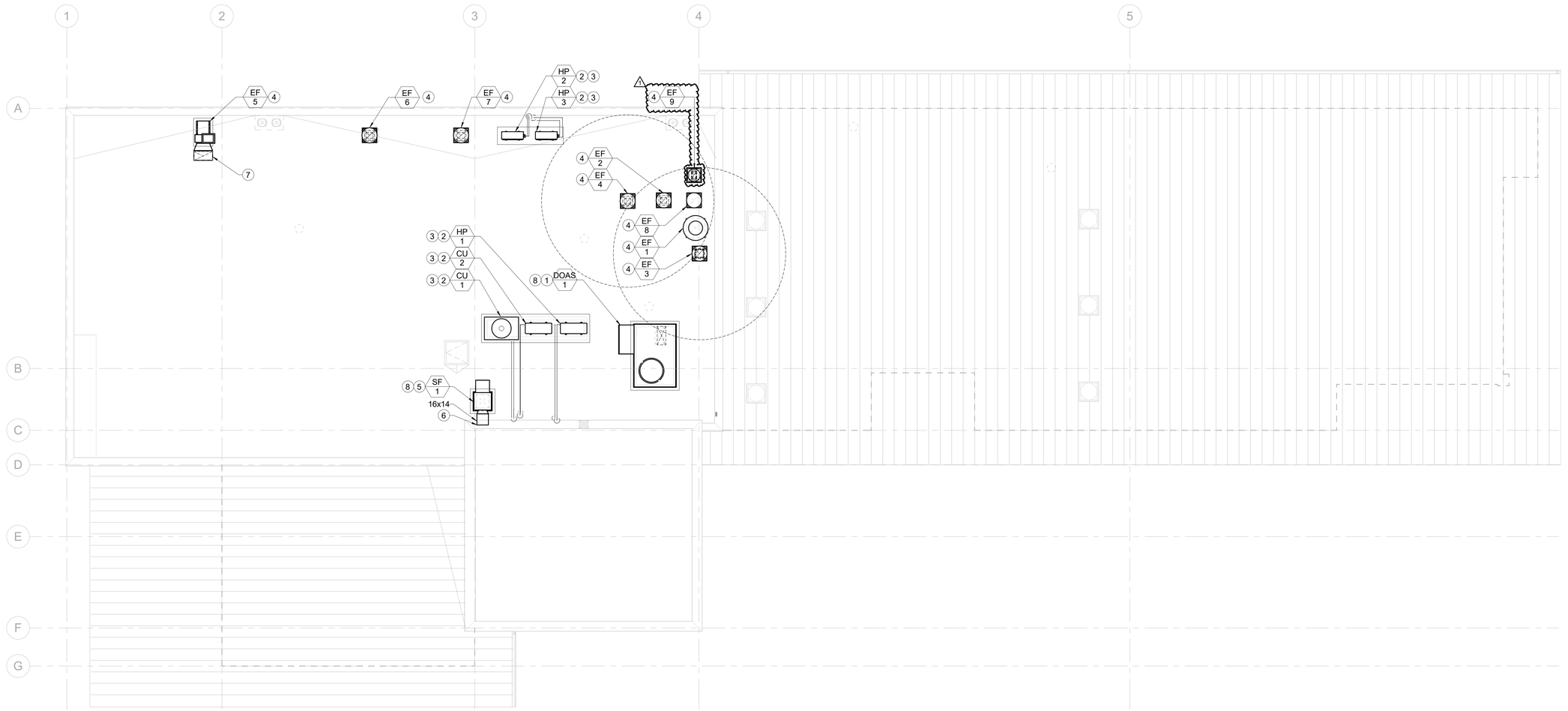

MECHANICAL COMMUNITY BUILDING ROOF PLAN ALT 7

SCALE: 3/16" = 1'-0"

1 / M2.03A7

N

CONSTRUCTION KEYNOTES

1. PROVIDE DEDICATED OUTSIDE AIR UNIT WITH ALL RELATED ACCESSORIES PER SCHEDULE. DOAS UNIT ABOVE 6" STRUCTURAL FRAMED ROOF CURB AND 18" MICROMELT WITH VIBRATION ISOLATION. PRO2VIDE 2" DEEP GALVANIZED CONDENSING PAN WITH DISCHARGE PIPE TO THE ROOF RECEPTOR. PROVIDE DISCONNECT SWITCH.
2. PROVIDE HEAT PUMP UNIT WITH ALL RELATED ACCESSORIES PER SCHEDULE.
3. PROVIDE 4" TALL HOUSEKEEPING PAD FOR HEAT PUMP. PROVIDE 0.5" RUBBER VIBRATION ISOLATION UNDER THE UNITS. PROVIDE DISCONNECT SWITCH.
4. PROVIDE ROOF MOUNTED EXHAUST FAN WITH ALL RELATED ACCESSORIES PER SCHEDULE.
5. PROVIDE SUPPLY FAN WITH ALL RELATED ACCESSORIES PER SCHEDULE.
6. 14" x 16" OSA DUCT DOWN THROUGH ROOF.
7. 26" x 12" EXHAUST AIR DUCT DOWN THROUGH ROOF.
8. PROVIDE 4 INCHES TALL HOUSEKEEOING PAD FOR UNIT MOUNTING.

DOAS UNIT SEQUENCE OF OPERATION

- THE UNIT SHALL BE CONSTRUCTED SO THAT IT CAN FUNCTION AS A STAND-ALONE HEATING AND COOLING SYSTEM CONTROLLED BY FACTORY SUPPLIED CONTROLLERS,THERMOSTATS AND / OR SENSORS. THE UNIT SHALL BE CONTROLLED BY A FACTORY-INSTALLED MICROPROCESSOR PROGRAMMABLE CONTROLLER (DDC) THAT IS CONNECTED TO VARIOUS OPTIONAL SENSORS TO CONTROL ITS OPERATION BY ONE OF THE FOLLOWING TWO SEQUENCES.

PROCESS CONTROLLED

- IN THE UNOCCUPIED MODE, THE OUTSIDE AIR UNIT WILL BE OFF AND THE OUTSIDE AIR DAMPER, IF SUPPLIED, WILL BE CLOSED. OCCUPIED OR UNOCCUPIED IS SIGNALED TO THE IAIRE CONTROLLER VIA A NORMALLY OPEN OR NORMALLY CLOSED CONTACT ON THE OCCUPIED INPUT WITH A CLOCK OR SWITCH. AN OPEN CONTACT ON THE INPUT INDICATES OCCUPIED, A CLOSED CONTACT INDICATES UNOCCUPIED.
- IN THE OCCUPIED MODE, THE OUTSIDE AIR DAMPER WILL OPEN AND THE SUPPLY FAN WILL RAMP UP TO THE CONFIGURED FAN SPEED (DEPENDENT ON WHETHER THE UNIT IS HEATING OR COOLING). THE FAN INPUT IS MONITORED TO DETERMINE IF THE FAN IS OPERATING OR NOT. IF NOT OPERATING, THE IAIRE CONTROLLER WILL ENTER INTO AN ALARM STATE, STAGE OFF COOLING OR HEATING AND ATTEMPT TO CYCLE THE FAN UNTIL IT STARTS.
- THERE IS A CONFIGURABLE EAT HEAT LOCKOUT (DEFAULT 58F). IF THE ENTERING AIR TEMPERATURE (EAT) IS LESS THAN OR EQUAL TO THE LOCKOUT, THEN THE HEAT STAGES WILL CYCLE TO MAINTAIN THE DISCHARGE AIR TEMPERATURE AND SPACE TEMPERATURE SET-POINT.
- THERE IS A CONFIGURABLE EAT COOL LOCKOUT (DEFAULT 61F). IF THE EAT IS MORE THAN OR EQUAL TO THIS LOCKOUT THEN Y1 IS ALWAYS ON AND Y2-Y4 IS STAGED ON DEPENDING ON DEMAND (IF ENABLED). THE MODULATING HOT GAS REHEAT CYCLE WILL BE USED TO MAINTAIN THE SPACE TEMPERATURE.
- IF THE EAT IS GREATER THAN THE EAT HEAT LOCKOUT (DEFAULT 58F) AND LESS THAN THE EAT COOL LOCKOUT (DEFAULT 61F), Y1 WILL TURN ON AND THE MODULATING HOT GAS REHEAT CYCLE WILL BE USED TO MAINTAIN SPACE TEMPERATURE. IF EAT LESS THAN SPACE TEMPERATURE AND SPACE TEMPERATURE IS GREATER THAN THE SET-POINT, FREE-COOLING WILL ENGAGE AND Y1 WILL BE OFF. WHILE IN THIS MODE, IF SPACE HUMIDITY IS > 50% THEN Y1 WILL STAGE ON AND IF ITS > 70% THEN Y2 WILL STAGE ON AS WELL. THE MODULATING HOT GAS REHEAT CYCLE WILL BE USED TO MAINTAIN SPACE TEMPERATURE.

AGENCY

FLEWELLING & MOODY
architecture planning interiors

HEADQUARTERS OFFICE:
99 S. Lake Avenue, Suite 300
Pasadena, CA 91101
Phone: 323.543.8300
E-Mail: fm-pasadena@flewelling-moody.com

ANTELOPE VALLEY OFFICE:
1035 West Lancaster Bouldvard
Lancaster, California 93534
Phone: 661.949.0771
E-Mail: fm-lancaster@flewelling-moody.com

An Employee Owned Corporation

ARCHITECT

CONSULTANT

Budlong
An MBE|SBE|DBE|LSBE Firm
Glendale|Downtown LA|Fremont|Camarillo
W W W . B U D L O N G . C O M
Job No. 23-140

REGISTERED PROFESSIONAL ENGINEER — CIVIL — No. 29448 — EXP. 06-30-25 — STATE OF CALIFORNIA

Drawn by: Author

Check by: Checker

Revisions

No.	Date	Description
	01/26/24	100% DD
	03/01/24	50% CD
	05/09/24	90% CD
	08/05/24	100% CD
	11/25/24	100% CD V2
	01/31/25	100% CD V3
1	08/27/2025	BID ALTERNATE

All dimensions must be checked at the job by the contractor who accepts full responsibility for their accuracy under the contract. These plans & the specifications in connection therewith have been prepared for a specific site. Any and all responsibility for their use in whole or in part on any other site is hereby disclaimed by Flewelling & Moody.

CITY OF RIDGECREST

SGT. JOHN PINNEY MEMORIAL POOL REPLACEMENT

205 S WARNER ST, RIDGECREST, CA 93555

Drawing Title

MECHANICAL COMMUNITY BUILDING ROOF PLAN ALT 7

Job No. 3055-0000

Date 08/07/2024

Sheet No. **M2.03A7**

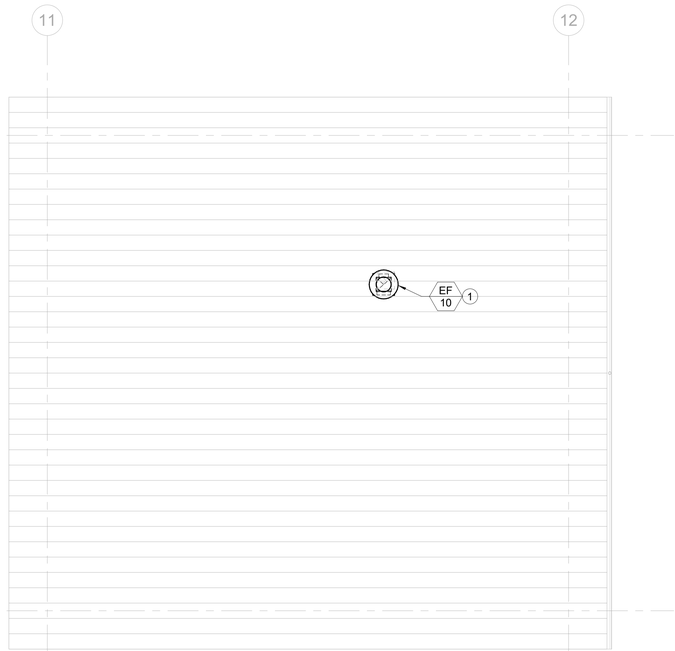

MECHANICAL EQUIPMENT STORAGE ROOF PLAN

SCALE: 3/16" = 1'-0"

1 / M2.04

N

CONSTRUCTION KEYNOTES

1. PROVIDE ROOF MOUNTED EXHUAST FAN WITH ALL RELATED ACCESSORIES PER SCHEDULE.

AGENCY

REVIEWED FOR CODE COMPLIANCE BY: WILLDAN ENGINEERING

Approval of these plans & specifications shall not be construed to be a permit for, or an approval of any violation of any Federal, State, County or City laws or ordinances. One set of approved plans must be kept on the job until completion.

9:27:15 AM Jul 21, 2025

FLEWELLING & MOODY
architecture planning interiors

HEADQUARTERS OFFICE:
99 S. Lake Avenue, Suite 300
Pasadena, CA 91101
Phone: 323.543.8300
E-Mail: fm-pasadena@flewelling-moody.com

ANTELOPE VALLEY OFFICE:
1035 West Lancaster Boulevard
Lancaster, California 93534
Phone: 661.949.0771
E-Mail: fm-lancaster@flewelling-moody.com

An Employee Owned Corporation

ARCHITECT

CONSULTANT

Budlong
An MBE|SBE|DBE|LSBE Firm
Glendale|Downtown LA|Fremont|Camarillo
W W W . B U D L O N G . C O M
Job No. 23-140

REGISTERED PROFESSIONAL ENGINEER — CHRISTOPHER J. PATE — No. 29448 — EXP. 06-30-25 — STATE OF CALIFORNIA

Drawn by: Author

Check by: Checker

Revisions

No.	Date	Description
	01/26/24	100% DD
	03/01/24	50% CD
	05/09/24	90% CD
	08/05/24	100% CD
	11/25/24	100% CD V2
	01/31/25	100% CD V3

All dimensions must be checked at the job by the contractor who accepts full responsibility for their accuracy under the contract. These plans & the specifications in connection therewith have been prepared for a specific site. Any and all responsibility for their use in whole or in part on any other site is hereby disclaimed by Flewelling & Moody.

CITY OF RIDGECREST

SGT. JOHN PINNEY MEMORIAL POOL REPLACEMENT

205 S WARNER ST, RIDGECREST, CA 93555

Drawing Title

MECHANICAL EQUIPMENT STORAGE ROOF PLAN

Job No. 3055-0100

Date 08/07/2024

Sheet No. **M2.04**

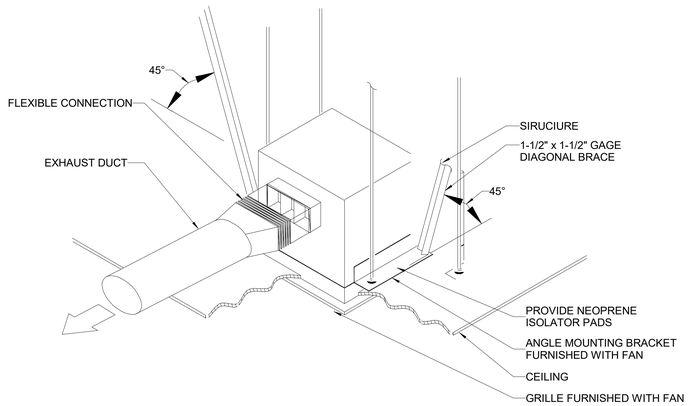

CEILING EXHAUST FAN DIAGRAM

SCALE:N.T.S.

1 M6.01

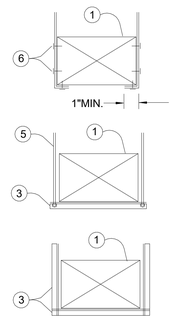

KEY NOTES:

1 DUCT

2 SHEET METAL STRAP 1" (25.4mm) WIDE, OF SAME METAL GAUGE AS DUCT.

3 STEEL ANGLE, NOT LESS THAN 1"x 1"x 1/8" (25.4 x 25.4 x 3 mm), SIZED TO MATCH DUCT.

4 SHEET METAL BAND, 1" (25.4mm) WIDE OF SAME METAL GAUGE AS DUCT.

5 ALL THREAD HANGER ROD WITH ACCESSORIES AS USED FOR LIGHT PIPE HANGER.

6 SELF TAPPING CADMIUM PLATED HEX HEADED SHEET METAL SCREW STRAPS TO BE TIGHT AGAINST DUCT.

HANGER SIZES FOR RECTANGULAR DUCT			
MAX. LENGTH ANY SIDE	HANGER	HORIZONTAL SUPPORT ANGLE	MAXIMUM SPACING
30"	1"x 18 GAUGE STRAP	NONE REQUIRED	10'-0"
36"	1/4" ROUND ROD	1-1/2" x 1-1/2" x 1/8"	8'-0"
48"	1/4" ROUND ROD	2" x 2" x 1/8"	8'-0"
60"	5/16" ROUND ROD	2" x 2" x 1/8"	8'-0"
84"	3/8" ROUND ROD	2" x 2" x 1/8"	8'-0"

DUCT HANGING DIAGRAM

SCALE:N.T.S.

2 M6.01

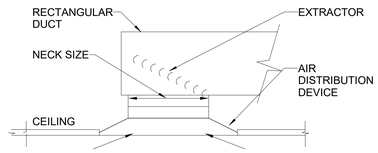

TYPICAL FOR DUCT CONNECTION ONLY

DUCT HARD CONNECTION DIAGRAM

SCALE:N.T.S.

3 M6.01

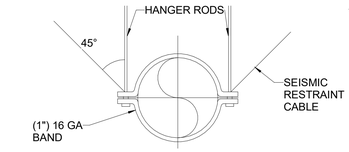

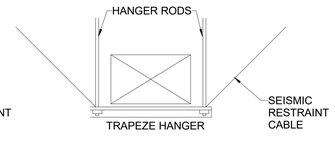

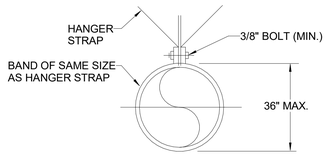

FOR RECTANGULAR DUCT HANGERS MINIMUM SIZE SEE CALIFORNIA MECHANICAL CODE TABLE # 6-2-A FOR RECTANGULAR DUCT TRAPEZE ANGLES HANGERS MINIMUM SIZE SEE CALIFORNIA MECHANICAL CODE TABLE # 6-2-B

NOTES:
NO POP RIVETS ALLOWED, USE SELF-TAPPING SHEETMETAL SCREWS ONLY.

ROUND DUCT HANGERS			
DUCT DIA	MAX SPACING	ROD	STRAP
10" DOWN	12'-0"	1/4"	1"x0.030 (22 GA)
11" TO 24"	12'-0"	1/4"	1"x0.030 (22 GA)
25" TO 36"	12'-0"	1/4"	1"x0.036 (20 GA)
37" TO 94"	12'-0"	TWO 3/8"	-

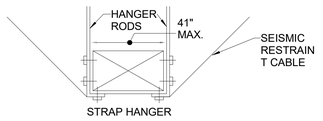

DUCT SUPPORT DIAGRAMS

SCALE:N.T.S.

4 M6.01

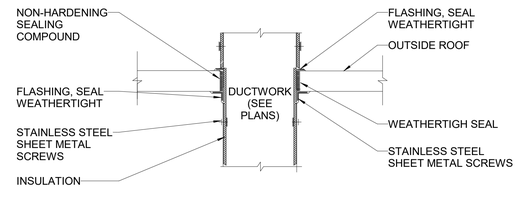

DUCT PENETRATION THROUGH ROOF

SCALE:N.T.S.

5 M6.01

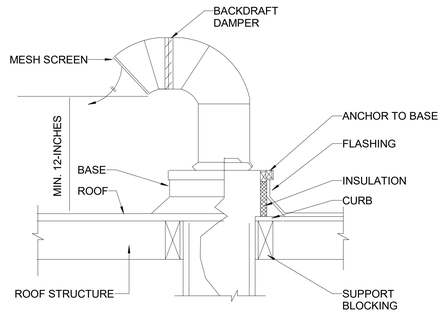

EXHAUST DISCHARGE AT ROOF

SCALE:N.T.S.

7 M6.01

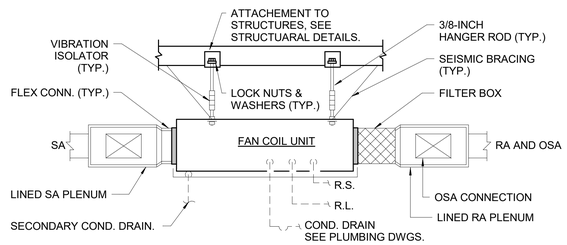

NOTE:

1. OSA AND RA CONNECTION TO THE MIXING BOX SHALL BE PROVIDED WITH MANUAL VOLUME DAMPER. IF THE ROOM IS PROVIDED WITH CO_2 SENSOR FOR DEMAND CONTROL VENTILATION THEN THE OSA DAMPER SHALL BE MODULATING MOTORIZED DAMPER.
2. PROVIDE AUTOMATIC DAMPER WITH OUTSIDE AIR INTAKE AND EXHAUST AIR DAMPER. THEY OPEN UP WHEN EQUIPMENT IS IN OPERATION, AND WHEN THE EQUIPMENT IS "OFF" THEY CLOSE AUTOMATICALLY.

DUCTED FAN COIL UNIT MOUNTING DIAGRAM

SCALE:N.T.S.

8 M6.01

RECTANGULAR LOW PRESSURE DUCTWORK

SINGLE LINE DIAGRAM	DOUBLE LINE CONFIGURATION	SINGLE LINE DIAGRAM	DOUBLE LINE CONFIGURATION
	W, R, R=W		5, 1/2, 1/2, 5, 1
T	T	T	T
C.D.	D/2, D, C.D		45°, W/2, W

ROUND LOW PRESSURE DUCTWORK

SINGLE LINE DIAGRAM	DOUBLE LINE CONFIGURATION	SINGLE LINE DIAGRAM	DOUBLE LINE CONFIGURATION
X" x Y", D"Ø	RECTANGULAR DUCT, X" x Y", ROUND DUCT D"Ø, CONICAL FITTING	X" x Y", D"Ø	1D", D"Ø, X" x Y", RECTANGULAR TO ROUND TRANSITION
$D"_2Ø$, $D"_1Ø$, $D"_3Ø$	$D"_1Ø$, $D"_2Ø$, $D"_3Ø$, 45° LATERAL & REDUCING FITTING, 45° LATERAL FITTING	$D"_1Ø$, $D"_3Ø$	$D"_1Ø$, $D"_2Ø$, $D"_3Ø$, ROUND TO ROUND TRANSITION
$D"_1Ø$, $D"_3Ø$, $D"_2Ø$	45° LAT. FITTING, THIS PORTION FOR CONTINUING DUCT RUN, MIN.6", 6" MIN., 45° LATERAL FITTING	$D"_1Ø$, $D"_2Ø$, $D"_3Ø$	$D"_1Ø$, $D"_2Ø$, $D"_3Ø$, 45° LATERAL & REDUCING FITTING, 90° ELBOW

DUCTWORK

SCALE:N.T.S.

6 M6.01

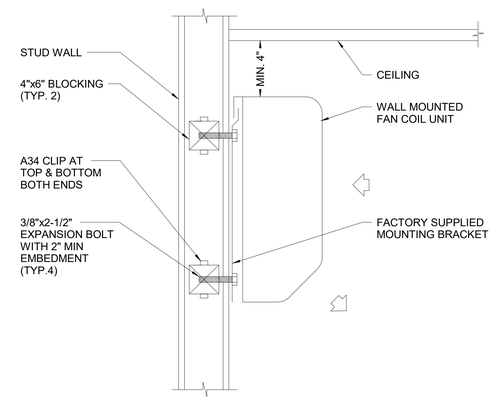

NOTE:

1. MOUNT AS HIGH AS POSSIBLE. EXACT MOUNTING HEIGHT TO BE FIELD VERIFIED. COORDINATE WITH EXTERIOR & INTERIOR CONDITIONS.
2. PROVIDE PIPE INSULATION PER MANUFACTURER INSTALLATION INSTRUCTIONS.

WALL MOUNTED FAN COIL UNIT

SCALE:N.T.S.

9 M6.01

AGENCY

REVIEWED FOR CODE COMPLIANCE BY: WILLDAN ENGINEERING

Approval of these plans & specifications shall not be construed to be a permit for, or an approval of any violation of any Federal, State, County or City laws or ordinances. One set of approved plans must be kept on the job until completion.

9:27:16 AM Jul 21, 2025

FLEWELLING & MOODY
architecture planning interiors

HEADQUARTERS OFFICE:
99 S. Lake Avenue, Suite 300
Pasadena, CA 91101
Phone: 323.543.8300
E-Mail: fm-pasadena@flewelling-moody.com

ANTELOPE VALLEY OFFICE:
1035 West Lancaster Boulevard
Lancaster, California 93534
Phone: 661.949.0771
E-Mail: fm-lancaster@flewelling-moody.com

An Employee Owned Corporation

ARCHITECT

CONSULTANT

Budlong
An MBE|SBE|DBE|LSBE Firm
Glendale|Downtown LA|Fremont|Camarillo
W W W . B U D L O N G . C O M
Job No. 23-140

REGISTERED PROFESSIONAL ENGINEER, CLINT E. PATEL, No. 29448, EXP. 06-30-25, MECHANICAL, STATE OF CALIFORNIA

Drawn by: Author

Check by: Checker

Revisions

No.	Date	Description
	01/26/24	100% DD
	03/01/24	50% CD
	05/09/24	90% CD
	08/05/24	100% CD
	11/25/24	100% CD V2
	01/31/25	100% CD V3

All dimensions must be checked at the job by the contractor who accepts full responsibility for their accuracy under the contract. These plans & the specifications in connection therewith have been prepared for a specific site. Any and all responsibility for their use in whole or in part on any other site is hereby disclaimed by Flewelling & Moody.

CITY OF RIDGECREST

SGT. JOHN PINNEY MEMORIAL POOL REPLACEMENT

205 S WARNER ST, RIDGECREST, CA 93555

Drawing Title

MECHANICAL DETAILS

Job No. 3055-0100

Sheet No. M6.01

Date 08/07/2024

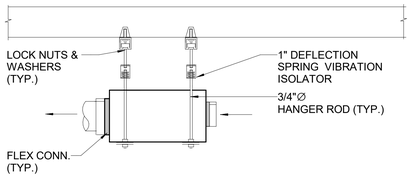

NOTE:

1. PROVIDE AUTOMATIC DAMPER WITH OUTSIDE AIR INTAKE AND EXHAUST AIR DAMPER. THEY OPEN UP WHEN EQUIPMENT IS IN OPERATION, AND WHEN THE EQUIPMENT IS "OFF" THEY CLOSE AUTOMATICALLY.

IN-LINE FAN DIAGRAM

SCALE:N.T.S.

1 / M6.02

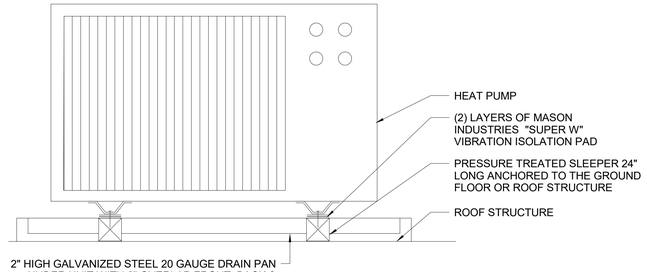

AIR COOLED HEAT PUMP MOUNTING DETAIL

SCALE:N.T.S

2 / M6.02

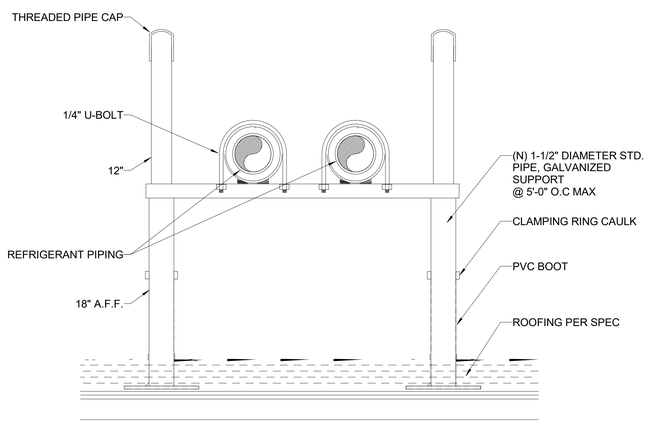

PIPE ON ROOF SUPPORT

SCALE:N.T.S.

3 / M6.02

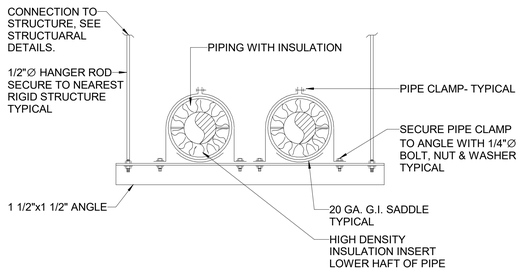

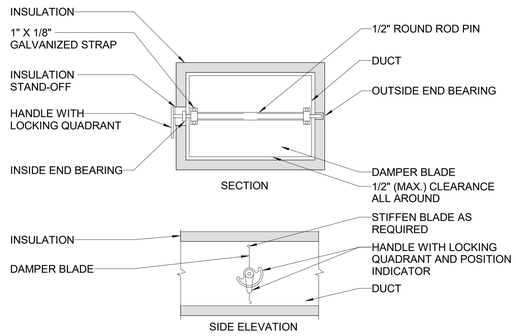

NOTES:

1. DELETE INSULATION STAND-OFF ON DUCTWORK WITHOUT EXTERIOR INSULATION.
2. DETAIL SHOWS SINGLE BLADE DAMPER. MULTI-BLADE DAMPERS INSTALLATIONS SHALL BE SIMILAR.
3. LOCK DAMPER DURING AIR BALANCE AND MARK QUADRANT TO RECORD AIR BALANCED DAMPER POSITION.
4. PROVIDE "HAT" SECTION AT QUADRANT FOR ALL EXTERNALLY INSULATED DUCTWORK.
5. PROVIDE FLUORESCENT COLORED MARKERS ON CEILING AT ALL VOLUME DAMPERS LOCATIONS.

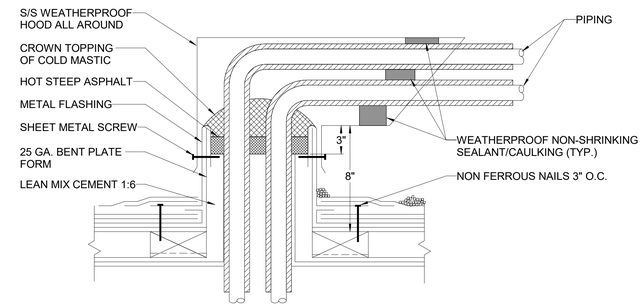

NOTE:
SEE ROOFING SPECIFICATIONS FOR THE ROOF CONSTRUCTION. AND ADDITIONAL REQUIREMENTS

PIPE SUPPORT DIAGRAM

SCALE:N.T.S.

4 / M6.02

RECTANGULAR MANUAL VOLUME DAMPER

SCALE:N.T.S.

5 / M6.02

REFRIGERANT PIPING THRU ROOF PENETRATION

SCALE:N.T.S.

6 / M6.02

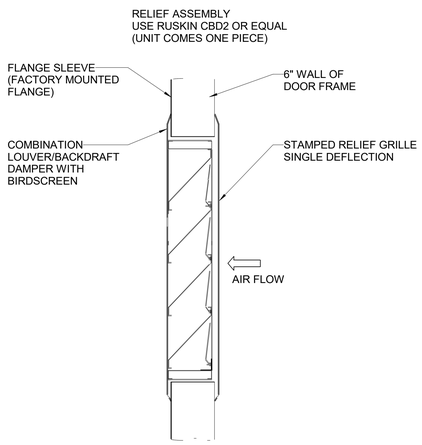

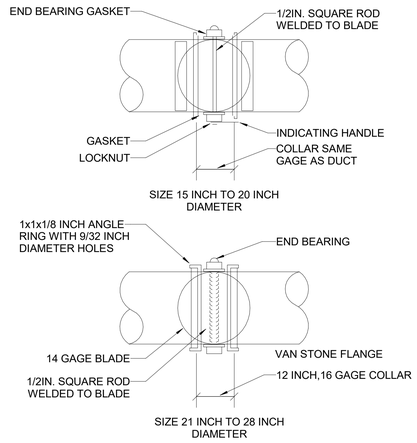

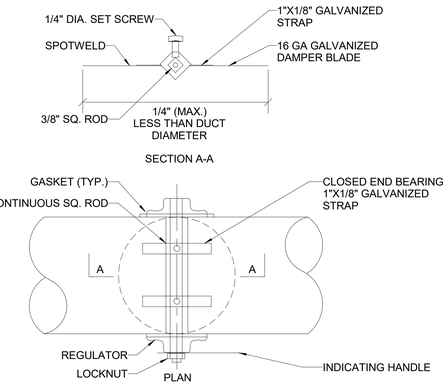

NOTES:

1. LOCK DAMPER DURING AIR BALANCE AND MARK QUADRANT TO RECORD AIR BALANCED DAMPER POSITION.
2. PROVIDE "HAT" SECTION AT QUADRANT FOR ALL EXTERNALLY INSULATED DUCTWORK.
3. PROVIDE FLUORESCENT COLORED MARKERS AT ALL VOLUME DAMPERS LOCATIONS.

RELIEF AIR WALL LOUVER DIAGRAM

SCALE:N.T.S.

7 / M6.02

ROUND VOLUME DAMPER LARGER THAN 14 IN. DIAMETER

SCALE:N.T.S.

8 / M6.02

ROUND VOLUME DAMPER UPTO 14 INCH DIAMETER

SCALE:N.T.S.

9 / M6.02

AGENCY

REVIEWED FOR CODE COMPLIANCE BY:
WILLDAN ENGINEERING

Approval of these plans & specifications shall not be construed to be a permit for, or an approval of any violation of any Federal, State, County or City laws or ordinances. One set of approved plans must be kept on the job until completion.

9:27:18 AM Jul 21, 2025

FLEWELLING & MOODY
architecture planning interiors

HEADQUARTERS OFFICE:
99 S. Lake Avenue, Suite 300
Pasadena, CA 91101
Phone: 323.543.8300
E-Mail: fm-pasadena@flewelling-moody.com

ANTELOPE VALLEY OFFICE:
1035 West Lancaster Boulevard
Lancaster, California 93534
Phone: 661.949.0771
E-Mail: fm-lancaster@flewelling-moody.com

An Employee Owned Corporation

ARCHITECT

CONSULTANT

Budlong
An MBE|SBE|DBE|LSBE Firm
Glendale|Downtown LA|Fremont|Camarillo
W W W . B U D L O N G . C O M

Job No. 23-140

REGISTERED PROFESSIONAL ENGINEER
JUNTIL PATRICK
No. 29448
EXP. 06-30-25
STATE OF CALIFORNIA

Drawn by: Author

Check by: Checker

Revisions

No.	Date	Description
	01/26/24	100% DD
	03/01/24	50% CD
	05/09/24	90% CD
	08/05/24	100% CD
	11/25/24	100% CD V2
	01/31/25	100% CD V3

All dimensions must be checked at the job by the contractor who accepts full responsibility for their accuracy under the contract. These plans & the specifications in connection therewith have been prepared for a specific site. Any and all responsibility for their use in whole or in part on any other site is hereby disclaimed by Flewelling & Moody.

CITY OF RIDGECREST

SGT. JOHN PINNEY MEMORIAL POOL REPLACEMENT

205 S WARNER ST, RIDGECREST, CA 93555

Drawing Title

MECHANICAL DETAILS

Job No. 3055-0100

Date 08/07/2024

Sheet No. M6.02

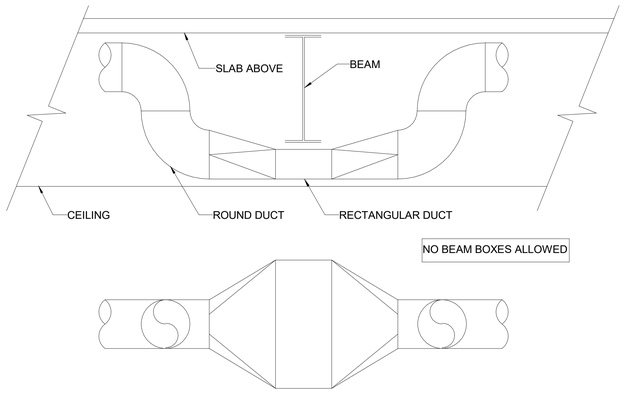

TYPICAL DUCT UNDER BEAM DIAGRAM

SCALE:N.T.S.

1 M6.03

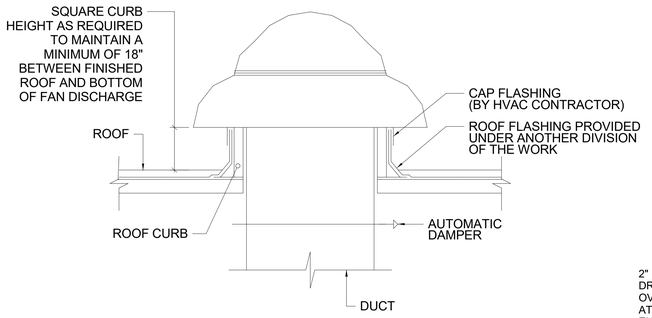

NOTES:

DUCT SHALL BE 1" SMALLER THAN ROOF OPENING. ROOF OPENING SHALL CONFORM TO CURB SIZE.

ROOF MOUNTED EXHAUST/SUPPLY FAN DIAGRAM

SCALE:N.T.S

2 M6.03

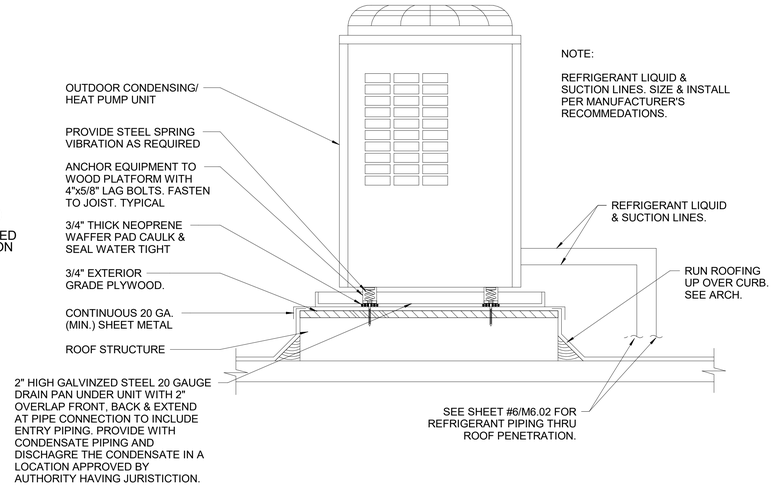

OUTDOOR CONDENSING/HP UNIT MOUNTING DIAGRAM

SCALE:N.T.S.

3 M6.03

EXPOSED

CONCEALED

FAN COIL UNIT INSTALLATION

SCALE:N.T.S.

4 M6.03

THERMOSTAT INSTALLATION DIAGRAM

SCALE:N.T.S.

5 M6.03

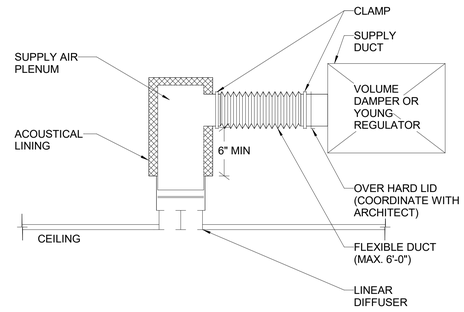

LINEAR SLOT DIFFUSER

SCALE:N.T.S.

6 M6.03

AGENCY

REVIEWED FOR CODE COMPLIANCE BY: WILLDAN ENGINEERING

Approval of these plans & specifications shall not be construed to be a permit for, or an approval of any violation of any Federal, State, County or City laws or ordinances. One set of approved plans must be kept on the job until completion.

9:27:19 AM Jul 21, 2025

FLEWELLING & MOODY
architecture planning interiors

HEADQUARTERS OFFICE:
99 S. Lake Avenue, Suite 300
Pasadena, CA 91101
Phone: 323.543.8300
E-Mail: fm-pasadena@flewelling-moody.com

ANTELOPE VALLEY OFFICE:
1035 West Lancaster Boulevard
Lancaster, California 93534
Phone: 661.949.0771
E-Mail: fm-lancaster@flewelling-moody.com

An Employee Owned Corporation

ARCHITECT

CONSULTANT

Budlong
An MBE|SBE|DBE|LSBE Firm
Glendale|Downtown LA|Fremont|Camarillo
W W W . B U D L O N G . C O M
Job No. 23-140

REGISTERED PROFESSIONAL ENGINEER — CUNTIL PATEL — No. 29448 — EXP. 06-30-25 — STATE OF CALIFORNIA

Drawn by: Author

Check by: Checker

Revisions

No.	Date	Description
	01/26/24	100% DD
	03/01/24	50% CD
	05/09/24	90% CD
	08/05/24	100% CD
	11/25/24	100% CD V2
	01/31/25	100% CD V3

All dimensions must be checked at the job by the contractor who accepts full responsibility for their accuracy under the contract. These plans & the specifications in connection therewith have been prepared for a specific site. Any and all responsibility for their use in whole or in part on any other site is hereby disclaimed by Flewelling & Moody.

CITY OF RIDGECREST

SGT. JOHN PINNEY MEMORIAL POOL REPLACEMENT

205 S WARNER ST, RIDGECREST, CA 93555

Drawing Title

MECHANICAL DETAILS

Job No. 3055-0100

Sheet No. **M6.03**

Date 08/07/2024

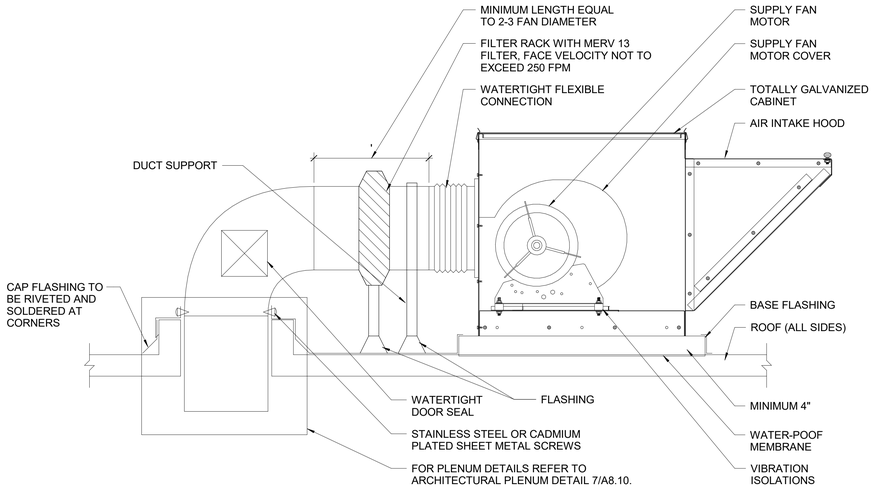

NOTE:

1. PROVIDE AUTOMATIC DAMPER WITH OUTSIDE AIR INTAKE AND EXHAUST AIR DAMPER. THEY OPEN UP WHEN EQUIPMENT IS IN OPERATION, AND WHEN THE EQUIPMENT IS "OFF" THEY CLOSE AUTOMATICALLY.

ROOF MOUNTED UTILITY TYPE SUPPLY AIR FAN

SCALE:N.T.S.

1 / M6.04

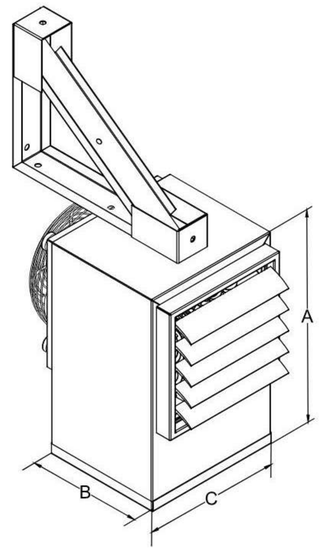

WALL MOUNTED ELECTRIC HEATER

SCALE:N.T.S.

2 / M6.04

AGENCY

REVIEWED FOR CODE COMPLIANCE BY: WILLDAN ENGINEERING

Approval of these plans & specifications shall not be construed to be a permit for, or an approval of any violation of any Federal, State, County or City laws or ordinances. One set of approved plans must be kept on the job until completion.

9:27:21 AM Jul 21, 2025

FLEWELLING & MOODY
architecture planning interiors

HEADQUARTERS OFFICE:
99 S. Lake Avenue, Suite 300
Pasadena, CA 91101
Phone: 323.543.8300
E-Mail: fm-pasadena@flewelling-moody.com

ANTELOPE VALLEY OFFICE:
1035 West Lancaster Bouldvard
Lancaster, California 93534
Phone: 661.949.0771
E-Mail: fm-lancaster@flewelling-moody.com

An Employee Owned Corporation

ARCHITECT

CONSULTANT

Budlong
An MBE|SBE|DBE|LSBE Firm
Glendale|Downtown LA|Fremont|Camarillo
W W W . B U D L O N G . C O M
Job No. 23-140

REGISTERED PROFESSIONAL ENGINEER
CUNTIL PATEL
No. 29448
EXP. 06-30-25
STATE OF CALIFORNIA

Drawn by: Author

Check by: Checker

Revisions

No.	Date	Description
	01/26/24	100% DD
	03/01/24	50% CD
	05/09/24	90% CD
	08/05/24	100% CD
	11/25/24	100% CD V2
	01/31/25	100% CD V3

All dimensions must be checked at the job by the contractor who accepts full responsibility for their accuracy under the contract. These plans & the specifications in connection therewith have been prepared for a specific site. Any and all responsibility for their use in whole or in part on any other site is hereby disclaimed by Flewelling & Moody.

CITY OF RIDGECREST

SGT. JOHN PINNEY MEMORIAL POOL REPLACEMENT

205 S WARNER ST, RIDGECREST, CA 93555

Drawing Title

MECHANICAL DETAILS

Job No. 3055-0100

Date 08/07/2024

Sheet No. M6.04

Indoor Units:	4 / 1 to 16	
Capacity:	99 / 48 to 129.6 (103.1%)	
Total Pipe Length:	86.0 / 3281.0	feet
Furthest Actual:	43.0 / 623.0	feet
Furthest Equiv.:	43.0 / 771.0	feet
After 1st Branch Actual:	32.0 / 295.0	feet
After 1st Branch Equiv.:	32.0 / 295.0	feet
Max Height Between IDU/IDU:	0.0 / 131.0	feet
Max Height Between IDU/ODU (Above):	0.0 / 230.0	feet
Max Height Between IDU/ODU (Below):	0.0 / 131.0	feet

Correction Factors

System Capacity:	1.01	0.90
Piping Length:	1.00	1.00
Altitude:	1.00	1.00
Defrosting:	-	0.95
Additional Derates:	1.00	1.00

Additional Refrigerant:	11.21	lb
Total Refrigerant Amount:	36.61	lb
Min Allowable Room Volume(cuft):	1408.01	

Design Temperatures (°F)

Cooling:
Indoor DB 80.0 Humidity 51.8% Indoor WB 67.0
Outdoor DB 95.0

Heating:
Indoor DB 70.0
Outdoor DB 47.0 Humidity 40.2% Outdoor WB 37.8

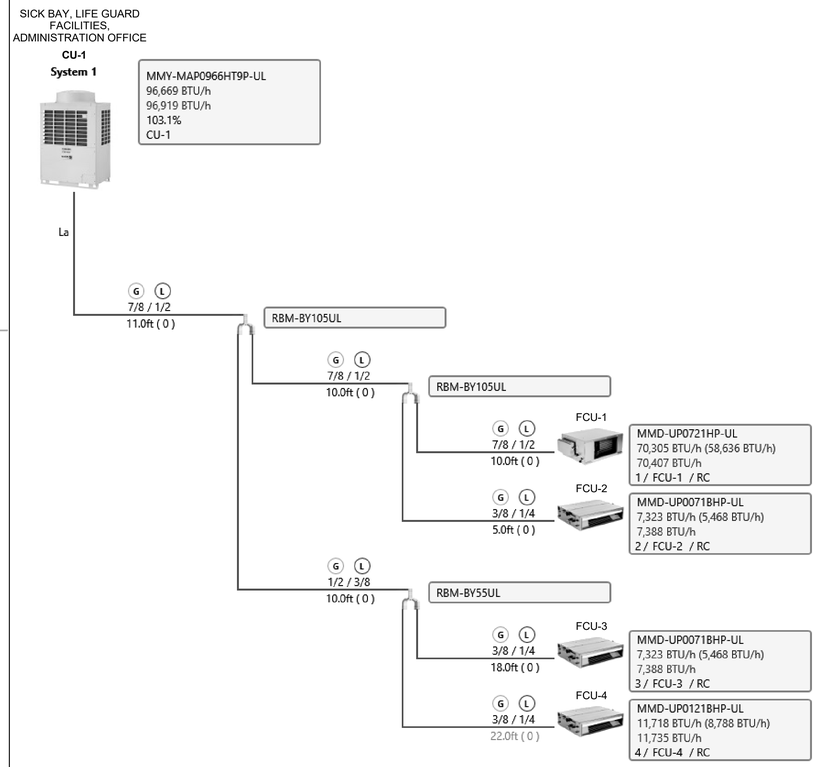

1 CU-1 PIPING DIAGRAM
N.T.S

Indoor Units:	2 / 1 to 9	
Capacity:	60 / 30 to 82.2 (100.0%)	
Total Pipe Length:	147.0 / 591.0	feet
Furthest Actual:	121.0 / 328.0	feet
Furthest Equiv.:	121.0 / 410.0	feet
After 1st Branch Actual:	35.0 / 115.0	feet
After 1st Branch Equiv.:	35.0 / 115.0	feet
Max Height Between IDU/IDU:	0.0 / 49.0	feet
Max Height Between IDU/ODU (Above):	0.0 / 164.0	feet
Max Height Between IDU/ODU (Below):	0.0 / 131.0	feet

Correction Factors

System Capacity:	0.92	0.94
Piping Length:	0.93	0.98
Altitude:	1.00	1.00
Defrosting:	-	0.95
Additional Derates:	1.00	1.00

Additional Refrigerant:	8.46	lb
Total Refrigerant Amount:	23.26	lb
Min Allowable Room Volume(cuft):	894.74	

Design Temperatures (°F)

Cooling:
Indoor DB 80.0 Humidity 51.8% Indoor WB 67.0
Outdoor DB 95.0

Heating:
Indoor DB 70.0
Outdoor DB 47.0 Humidity 40.2% Outdoor WB 37.8

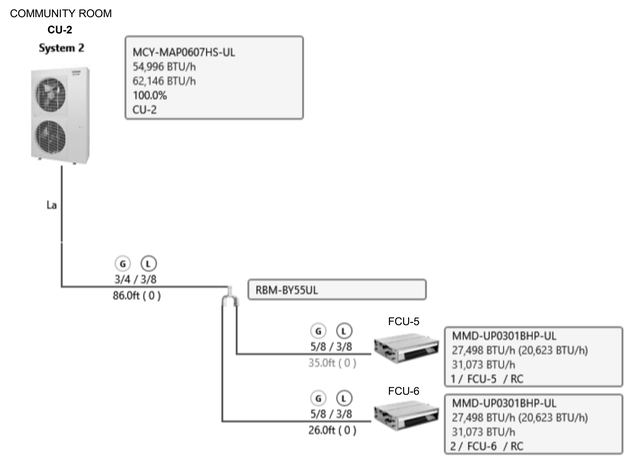

2 CU-2 PIPING DIAGRAM
N.T.S

AGENCY

REVIEWED FOR CODE COMPLIANCE BY:
WILLDAN ENGINEERING

Approval of these plans & specifications shall not be construed to be a permit for, or an approval of any violation of any Federal, State, County or City laws or ordinances. One set of approved plans must be kept on the job until completion.

9:27:22 AM Jul 21, 2025

FLEWELLING & MOODY
architecture planning interiors

HEADQUARTERS OFFICE:
99 S. Lake Avenue, Suite 300
Pasadena, CA 91101
Phone: 323.543.8300
E-Mail: fm-pasadena@flewelling-moody.com

ANTELOPE VALLEY OFFICE:
1035 West Lancaster Boulevard
Lancaster, California 93534
Phone: 661.949.0771
E-Mail: fm-lancaster@flewelling-moody.com

An Employee Owned Corporation

ARCHITECT

CONSULTANT

Budlong
An MBE|SBE|DBE|LSBE Firm
Glendale|Downtown LA|Fremont|Camarillo
W W W . B U D L O N G . C O M
Job No. 23-140

REGISTERED PROFESSIONAL ENGINEER — CONTL PATEL — No. 29448 — EXP. 06-30-25 — MECHANICAL — STATE OF CALIFORNIA

Drawn by: Author

Check by: Checker

Revisions

No.	Date	Description
	01/26/24	100% DD
	03/01/24	50% CD
	05/09/24	90% CD
	08/05/24	100% CD
	11/25/24	100% CD V2
	01/31/25	100% CD V3

All dimensions must be checked at the job by the contractor who accepts full responsibility for their accuracy under the contract. These plans & the specifications in connection therewith have been prepared for a specific site. Any and all responsibility for their use in whole or in part on any other site is hereby disclaimed by Flewelling & Moody.

CITY OF RIDGECREST

SGT. JOHN PINNEY MEMORIAL POOL REPLACEMENT

205 S WARNER ST, RIDGECREST, CA 93555

Drawing Title

MECHANICAL PIPING DIAGRAMS

Job No. 3055-0100

Date 08/07/2024

Sheet No. **M6.05**

Indoor Units:	4 / 1 to 16	
Capacity:	99 / 48 to 129.6 (103.1%)	
Total Pipe Length:	86.0 / 3281.0	feet
Furthest Actual:	43.0 / 623.0	feet
Furthest Equiv.:	43.0 / 771.0	feet
After 1st Branch Actual:	32.0 / 295.0	feet
After 1st Branch Equiv.:	32.0 / 295.0	feet
Max Height Between IDU/IDU:	0.0 / 131.0	feet
Max Height Between IDU/ODU (Above):	0.0 / 230.0	feet
Max Height Between IDU/ODU (Below):	0.0 / 131.0	feet

Correction Factors

System Capacity:	1.01	0.90
Piping Length:	1.00	1.00
Altitude:	1.00	1.00
Defrosting:	-	0.95
Additional Derates:	1.00	1.00

Additional Refrigerant:	11.21	lb
Total Refrigerant Amount:	36.61	lb
Min Allowable Room Volume(cuft):	1408.01	

Design Temperatures (°F)

Cooling:
Indoor DB 80.0 Humidity 51.8% Indoor WB 67.0
Outdoor DB 95.0

Heating:
Indoor DB 70.0
Outdoor DB 47.0 Humidity 40.2% Outdoor WB 37.8

SICK BAY, LIFE GUARD FACILITIES, ADMINISTRATION OFFICE

CU-1
System 1



MMY-MAP0966HT9P-UL
96,669 BTU/h
96,919 BTU/h
103.1%
CU-1

La

G L 7/8 / 1/2 11.0ft (0)

RBM-BY105UL

G L 7/8 / 1/2 10.0ft (0)

RBM-BY105UL

G L 7/8 / 1/2 10.0ft (0)

FCU-1



MMD-UP0721HP-UL
70,305 BTU/h (58,636 BTU/h)
70,407 BTU/h
1 / FCU-1 / RC

G L 3/8 / 1/4 5.0ft (0)

FCU-2



MMD-UP0071BHP-UL
7,323 BTU/h (5,468 BTU/h)
7,388 BTU/h
2 / FCU-2 / RC

G L 1/2 / 3/8 10.0ft (0)

RBM-BY55UL

G L 3/8 / 1/4 18.0ft (0)

FCU-3



MMD-UP0071BHP-UL
7,323 BTU/h (5,468 BTU/h)
7,388 BTU/h
3 / FCU-3 / RC

G L 3/8 / 1/4 22.0ft (0)

FCU-4



MMD-UP0121BHP-UL
11,718 BTU/h (8,788 BTU/h)
11,735 BTU/h
4 / FCU-4 / RC

1 CU-1 PIPING DIAGRAM
N.T.S

1

AGENCY

FLEWELLING & MOODY
architecture planning interiors

HEADQUARTERS OFFICE:
99 S. Lake Avenue, Suite 300
Pasadena, CA 91101
Phone: 323.543.8300
E-Mail: fm-pasadena@flewelling-moody.com

ANTELOPE VALLEY OFFICE:
1035 West Lancaster Boulevard
Lancaster, California 93534
Phone: 661.949.0771
E-Mail: fm-lancaster@flewelling-moody.com

An Employee Owned Corporation

ARCHITECT

CONSULTANT

Budlong
An MBE|SBE|DBE|LSBE Firm
Glendale|Downtown LA|Fremont|Camarillo
W W W . B U D L O N G . C O M
Job No. 23-140

REGISTERED PROFESSIONAL ENGINEER
CONTL PATEL
No. 29448
EXP. 06-30-25
MECHANICAL
STATE OF CALIFORNIA

Drawn by: Author

Check by: Checker

Revisions

No.	Date	Description
	01/26/24	100% DD
	03/01/24	50% CD
	05/09/24	90% CD
	08/05/24	100% CD
	11/25/24	100% CD V2
	01/31/25	100% CD V3
1	08/27/2025	BID ALTERNATE

All dimensions must be checked at the job by the contractor who accepts full responsibility for their accuracy under the contract. These plans & the specifications in connection therewith have been prepared for a specific site. Any and all responsibility for their use in whole or in part on any other site is hereby disclaimed by Flewelling & Moody.

CITY OF RIDGECREST

SGT. JOHN PINNEY MEMORIAL POOL REPLACEMENT

205 S WARNER ST, RIDGECREST, CA 93555

Drawing Title

MECHANICAL PIPING DIAGRAMS

Job No. 3055-0000

Date 08/07/2024

Sheet No. **M6.05A6**

Indoor Units:		1 / 1 to 1	
Capacity:		24 / 12 to 24 (100.0%)	
Total Pipe Length:		86.0 / 164.1	feet
Furthest Actual:		86.0 / 164.1	feet
Furthest Equiv.:		86.0 / 164.1	feet
After 1st Branch Actual:		0.0 / 0.0	feet
After 1st Branch Equiv.:		0.0 / 0.0	feet
Max Height Between IDU/IDU:		0.0 / 0.0	feet
Max Height Between IDU/ODU (Above):		0.0 / 98.5	feet
Max Height Between IDU/ODU (Below):		0.0 / 98.5	feet
Correction Factors			
System Capacity:	1.00	1.00	
Piping Length:	0.95	0.83	
Altitude:	1.00	1.00	
Defrosting:	-	1.00	
Additional Derates:	1.00	1.00	
Additional Refrigerant:		0.00	lb
Total Refrigerant Amount:		12.13	lb
Min Allowable Room Volume(cuft):		466.36	

Design Temperatures (°F)

Cooling:
Indoor DB 80.0 Humidity 51.8% Indoor WB 67.0
Outdoor DB 95.0

Heating:
Indoor DB 70.0
Outdoor DB 47.0 Humidity 40.2% Outdoor WB 37.8

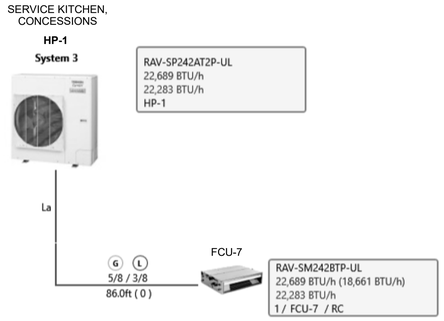

1 HP-1 PIPING DIAGRAM
N.T.S

Indoor Units:		1 / 1 to 1	
Capacity:		6 / 3 to 6 (100.0%)	
Total Pipe Length:		10.0 / 82.0	feet
Furthest Actual:		10.0 / 82.0	feet
Furthest Equiv.:		10.0 / 82.0	feet
After 1st Branch Actual:		0.0 / 0.0	feet
After 1st Branch Equiv.:		0.0 / 0.0	feet
Max Height Between IDU/IDU:		0.0 / 0.0	feet
Max Height Between IDU/ODU (Above):		0.0 / 32.0	feet
Max Height Between IDU/ODU (Below):		0.0 / 32.0	feet
Correction Factors			
System Capacity:	1.00	1.00	
Piping Length:	1.00	1.00	
Altitude:	1.00	1.00	
Defrosting:	-	1.00	
Additional Derates:	1.00	1.00	
Additional Refrigerant:		0.00	lb
Total Refrigerant Amount:		2.38	lb
Min Allowable Room Volume(cuft):		91.58	

Design Temperatures (°F)

Cooling:
Indoor DB 80.0 Humidity 51.8% Indoor WB 67.0
Outdoor DB 95.0

Heating:
Indoor DB 70.0
Outdoor DB 47.0 Humidity 40.2% Outdoor WB 37.8

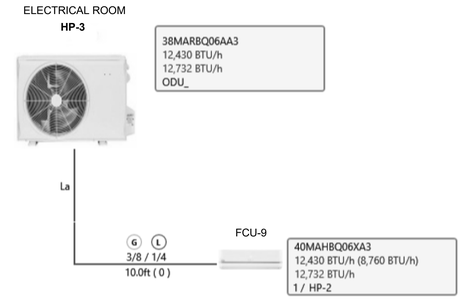

3 HP-3 PIPING DIAGRAM
N.T.S

Indoor Units:		1 / 1 to 1	
Capacity:		6 / 3 to 6 (100.0%)	
Total Pipe Length:		10.0 / 82.0	feet
Furthest Actual:		10.0 / 82.0	feet
Furthest Equiv.:		10.0 / 82.0	feet
After 1st Branch Actual:		0.0 / 0.0	feet
After 1st Branch Equiv.:		0.0 / 0.0	feet
Max Height Between IDU/IDU:		0.0 / 0.0	feet
Max Height Between IDU/ODU (Above):		0.0 / 32.0	feet
Max Height Between IDU/ODU (Below):		0.0 / 32.0	feet
Correction Factors			
System Capacity:	1.00	1.00	
Piping Length:	1.00	1.00	
Altitude:	1.00	1.00	
Defrosting:	-	1.00	
Additional Derates:	1.00	1.00	
Additional Refrigerant:		0.00	lb
Total Refrigerant Amount:		2.38	lb
Min Allowable Room Volume(cuft):		91.58	

Design Temperatures (°F)

Cooling:
Indoor DB 80.0 Humidity 51.8% Indoor WB 67.0
Outdoor DB 95.0

Heating:
Indoor DB 70.0
Outdoor DB 47.0 Humidity 40.2% Outdoor WB 37.8

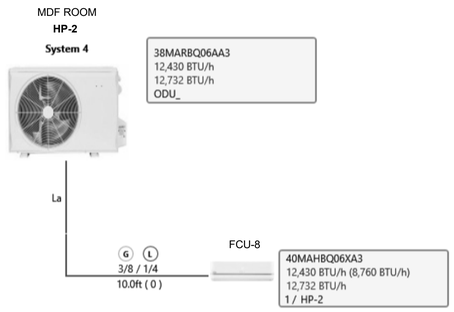

2 HP-2 PIPING DIAGRAM
N.T.S

AGENCY

REVIEWED FOR CODE COMPLIANCE BY: WILLDAN ENGINEERING

Approval of these plans & specifications shall not be construed to be a permit for, or an approval of any violation of any Federal, State, County or City laws or ordinances. One set of approved plans must be kept on the job until completion.

9:27:24 AM Jul 21, 2025

FLEWELLING & MOODY
architecture planning interiors

HEADQUARTERS OFFICE:
99 S. Lake Avenue, Suite 300
Pasadena, CA 91101
Phone: 323.543.8300
E-Mail: fm-pasadena@flewelling-moody.com

ANTELOPE VALLEY OFFICE:
1035 West Lancaster Boulevard
Lancaster, California 93534
Phone: 661.949.0771
E-Mail: fm-lancaster@flewelling-moody.com

An Employee Owned Corporation

ARCHITECT

CONSULTANT

Budlong
An MBE|SBE|DBE|LSBE Firm
Glendale|Downtown LA|Fremont|Camarillo
W W W . B U D L O N G . C O M
Job No. 23-140

REGISTERED PROFESSIONAL ENGINEER — CONTL PATEL — No. 29448 — EXP. 06-30-25 — STATE OF CALIFORNIA

Drawn by: Author

Check by: Checker

Revisions

No.	Date	Description
	01/26/24	100% DD
	03/01/24	50% CD
	05/09/24	90% CD
	08/05/24	100% CD
	11/25/24	100% CD V2
	01/31/25	100% CD V3

All dimensions must be checked at the job by the contractor who accepts full responsibility for their accuracy under the contract. These plans & the specifications in connection therewith have been prepared for a specific site. Any and all responsibility for their use in whole or in part on any other site is hereby disclaimed by Flewelling & Moody.

CITY OF RIDGECREST

SGT. JOHN PINNEY MEMORIAL POOL REPLACEMENT

205 S WARNER ST, RIDGECREST, CA 93555

Drawing Title

MECHANICAL PIPING DIAGRAMS

Job No. 3055-0100

Date 08/07/2024

Sheet No. **M6.06**

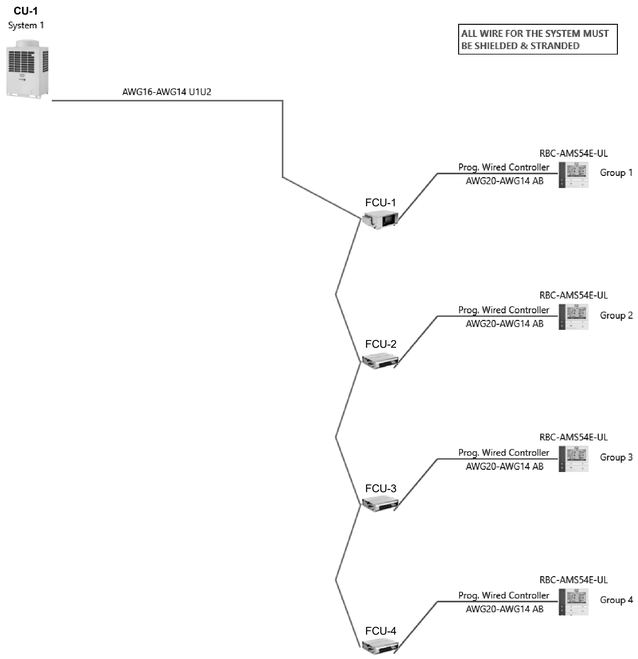

1 CU-1 WIRING DIAGRAM
N.T.S

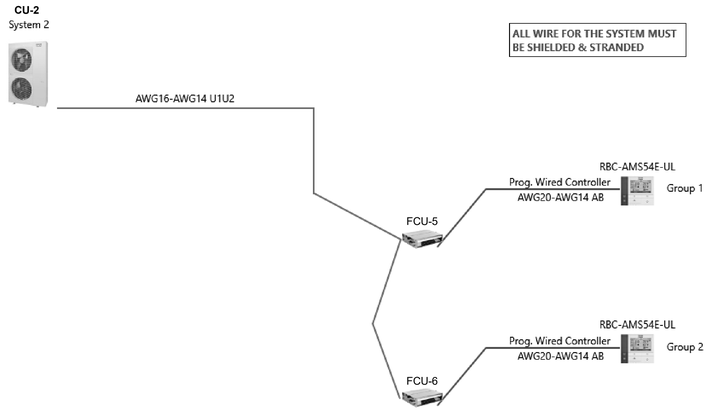

1 CU-2 WIRING DIAGRAM
N.T.S

AGENCY

REVIEWED FOR CODE COMPLIANCE BY:
WILLDAN ENGINEERING

Approval of these plans & specifications shall not be construed to be a permit for, or an approval of any violation of any Federal, State, County or City laws or ordinances. One set of approved plans must be kept on the job until completion.

9:27:25 AM Jul 21, 2025

FLEWELLING & MOODY
architecture planning interiors

HEADQUARTERS OFFICE:
99 S. Lake Avenue, Suite 300
Pasadena, CA 91101
Phone: 323.543.8300
E-Mail: fm-pasadena@flewelling-moody.com

ANTELOPE VALLEY OFFICE:
1035 West Lancaster Bouldvard
Lancaster, California 93534
Phone: 661.949.0771
E-Mail: fm-lancaster@flewelling-moody.com

An Employee Owned Corporation

ARCHITECT

CONSULTANT

Budlong
An MBE|SBE|DBE|LSBE Firm
Glendale|Downtown LA|Fremont|Camarillo
W W W . B U D L O N G . C O M
Job No. 23-140

REGISTERED PROFESSIONAL ENGINEER
CUNTIL PATEL
No. 29448
EXP. 06-30-25
MECHANICAL
STATE OF CALIFORNIA

Drawn by: Author

Check by: Checker

Revisions

No.	Date	Description
	01/26/24	100% DD
	03/01/24	50% CD
	05/09/24	90% CD
	08/05/24	100% CD
	11/25/24	100% CD V2
	01/31/25	100% CD V3

All dimensions must be checked at the job by the contractor who accepts full responsibility for their accuracy under the contract. These plans & the specifications in connection therewith have been prepared for a specific site. Any and all responsibility for their use in whole or in part on any other site is hereby disclaimed by Flewelling & Moody.

CITY OF RIDGECREST

SGT. JOHN PINNEY MEMORIAL POOL REPLACEMENT

205 S WARNER ST, RIDGECREST, CA 93555

Drawing Title

MECHANICAL WIRING DIAGRAMS

Job No. 3055-0100

Date 08/07/2024

Sheet No. **M6.07**

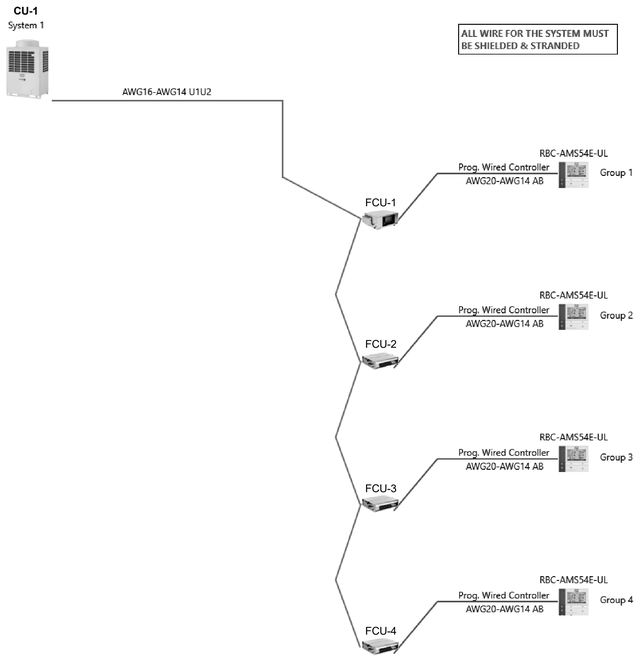

1 CU-1 WIRING DIAGRAM
N.T.S

1

AGENCY

FLEWELLING & MOODY
architecture planning interiors

HEADQUARTERS OFFICE:
99 S. Lake Avenue, Suite 300
Pasadena, CA 91101
Phone: 323.543.8300
E-Mail: fm-pasadena@flewelling-moody.com

ANTELOPE VALLEY OFFICE:
1035 West Lancaster Boulevard
Lancaster, California 93534
Phone: 661.949.0771
E-Mail: fm-lancaster@flewelling-moody.com

An Employee Owned Corporation

ARCHITECT

CONSULTANT

Budlong
An MBE|SBE|DBE|LSBE Firm
Glendale|Downtown LA|Fremont|Camarillo
W W W . B U D L O N G . C O M
Job No. 23-140

REGISTERED PROFESSIONAL ENGINEER
CUNTIL PATEL
No. 29448
EXP. 06-30-25
MECHANICAL
STATE OF CALIFORNIA

Drawn by: Author

Check by: Checker

Revisions

No.	Date	Description
	01/26/24	100% DD
	03/01/24	50% CD
	05/09/24	90% CD
	08/05/24	100% CD
	11/25/24	100% CD V2
	01/31/25	100% CD V3
1	08/27/2025	BID ALTERNATE

All dimensions must be checked at the job by the contractor who accepts full responsibility for their accuracy under the contract. These plans & the specifications in connection therewith have been prepared for a specific site. Any and all responsibility for their use in whole or in part on any other site is hereby disclaimed by Flewelling & Moody.

CITY OF RIDGECREST

SGT. JOHN PINNEY MEMORIAL POOL REPLACEMENT

205 S WARNER ST, RIDGECREST, CA 93555

Drawing Title

MECHANICAL WIRING DIAGRAMS

Job No. 3055-0000

Date 08/07/2024

Sheet No. **M6.07A6**

HP-1
System 3



ALL WIRE FOR THE SYSTEM MUST BE SHIELDED & STRANDED

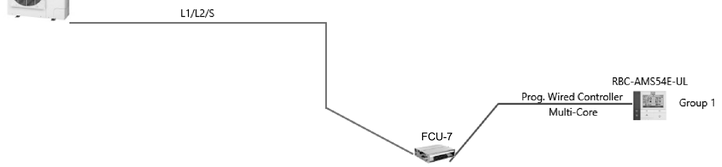

1 HP-1 WIRING DIAGRAM
N.T.S

HP-2
System 4



2 HP-2 WIRING DIAGRAM
N.T.S

HP-3



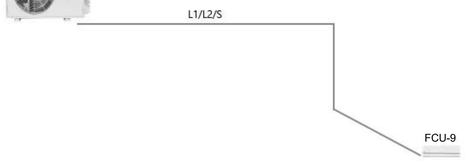

3 HP-3 WIRING DIAGRAM
N.T.S

AGENCY

REVIEWED FOR CODE COMPLIANCE BY: WILLDAN ENGINEERING

Approval of these plans & specifications shall not be construed to be a permit for, or an approval of any violation of any Federal, State, County or City laws or ordinances. One set of approved plans must be kept on the job until completion.

9:27:27 AM Jul 21, 2025

FLEWELLING & MOODY
architecture planning interiors

HEADQUARTERS OFFICE:
99 S. Lake Avenue, Suite 300
Pasadena, CA 91101
Phone: 323.543.8300
E-Mail: fm-pasadena@flewelling-moody.com

ANTELOPE VALLEY OFFICE:
1035 West Lancaster Bouldvard
Lancaster, California 93534
Phone: 661.949.0771
E-Mail: fm-lancaster@flewelling-moody.com

An Employee Owned Corporation

ARCHITECT

CONSULTANT

Budlong
An MBE|SBE|DBE|LSBE Firm
Glendale|Downtown LA|Fremont|Camarillo
W W W . B U D L O N G . C O M
Job No. 23-140

REGISTERED PROFESSIONAL ENGINEER
CUNTIL PATEL
No. 29448
EXP. 06-30-25
STATE OF CALIFORNIA

Drawn by: Author

Check by: Checker

Revisions

No.	Date	Description
	01/26/24	100% DD
	03/01/24	50% CD
	05/09/24	90% CD
	08/05/24	100% CD
	11/25/24	100% CD V2
	01/31/25	100% CD V3

All dimensions must be checked at the job by the contractor who accepts full responsibility for their accuracy under the contract. These plans & the specifications in connection therewith have been prepared for a specific site. Any and all responsibility for their use in whole or in part on any other site is hereby disclaimed by Flewelling & Moody.

CITY OF RIDGECREST

SGT. JOHN PINNEY MEMORIAL POOL REPLACEMENT

205 S WARNER ST, RIDGECREST, CA 93555

Drawing Title

MECHANICAL WIRING DIAGRAMS

Job No. 3055-0100

Date 08/07/2024

Sheet No. **M6.08**

CERTIFICATE OF COMPLIANCE - NONRESIDENTIAL PERFORMANCE COMPLIANCE METHOD	NRCC-PRF-E
Nonresidential Performance Compliance Method	(Page 1 of 22)
Project Name: SGT. JOHN PINNEY MEMORIAL POOL REPLACEMENT	**Date Prepared:** 2025-04-30

A. General Information

1	Project Name	SGT. JOHN PINNEY MEMORIAL POOL REPLACEMENT			
2	Run Title	Title 24 Analysis			
3	Project Location	205 S WARNER ST			
4	City	RIDGECREST	5	Standards Version	Compliance 2022
6	Zip code	93555	7	Compliance Software (version)	EnergyPro 9.3
8	Climate Zone	14	9	Building Orientation (deg)	0
10	Building Type(s)	• Nonresidential	11	Weather File	PALMDALE_STYP20.epw
12	Project Scope	• New complete scope	13	Number of Dwelling Units	0
14	Total Conditioned Floor Area in Scope (ft²)	4939.18	15	Total # of hotel/motel rooms	0
16	Total Unconditioned Floor Area (ft²)	0	17	Fuel Type	Natural gas
18	Nonresidential Conditioned Floor Area	4939.18	19	Total # of Stories (Habitable Above Grade)	1
20	Residential Conditioned Floor Area	0			

CERTIFICATE OF COMPLIANCE - NONRESIDENTIAL PERFORMANCE COMPLIANCE METHOD	NRCC-PRF-E
Nonresidential Performance Compliance Method	(Page 2 of 22)

B. PROJECT SUMMARY

Table B shows which building components are included in the performance calculation. If indicated as not included, the project must show compliance prescriptively if within the permit application.

Building Components Complying via Performance					Building Components Complying Prescriptively		
Envelope (See Table G)	Nonres	Performance	Solar Thermal Water Heating (See Table I3)	☐ Performance	The following building components are ONLY eligible for prescriptive compliance and should be documented on the NRCC form listed if within the scope of the permit application (i.e. compliance will not be shown on the NRCC-PRF-E).		
	MultiFam	Not Included		☒ Not Included			
Mechanical (See Table H)	Nonres	Performance	Covered Process: Commercial Kitchens (see Table J)	☐ Performance	Indoor Lighting (Unconditioned) 140.6 & 170.2(e)	NRCC-LTI-E is required	
	MultiFam	Not Included		☒ Not Included	Outdoor Lighting 140.7 & 170.2(e)	NRCC-LTO-E is required	
Domestic Hot Water (See Table I)	Nonres	Performance	Covered Process: Laboratory Exhaust (see Table J)	☐ Performance	Sign Lighting 140.8 & 170.2(e)	NRCC-LTS-E is required	
	MultiFam	Not Included		☒ Not Included	**Building Components Complying with Mandatory Measures**		
Lighting (Indoor Conditioned, see Table K)	Nonres	Performance	Photovoltaics (see Table F)	☒ Performance	Electrical power systems, commissioning, solar ready, elevator and escalator requirements are mandatory and should be documented on the NRCC form listed if applicable (i.e. compliance will not be shown on the NRCC-PRF-E.)		
	MultiFam	Not Included		☐ Not Included	Electrical Power Distribution 110.11	NRCC-ELC-E is required	
			Battery (see Table F)	☐ Performance	Commissioning 120.8	NRCC-CXR-E is required	
				☒ Not Included	Solar and Battery 110.10	NRCC-SAB-E is required	

CERTIFICATE OF COMPLIANCE - NONRESIDENTIAL PERFORMANCE COMPLIANCE METHOD	NRCC-PRF-E
Nonresidential Performance Compliance Method	(Page 3 of 22)

C1. COMPLIANCE SUMMARY

COMPLIES[3]

	Time Dependent Valuaton (TDV)		Source Energy Use
	Efficiency[1] (kBtu/ft² - yr)	Total[2] (kBtu/ft² - yr)	Total[2] (kBtu/ft² - yr)
Standard Design	601.76	478.21	42.93
Proposed Design	554.16	475.84	41.07
Compliance Margins	**47.6**	**2.37**	**1.86**
	Pass	**Pass**	**Pass**

[1] Efficiency measures include improvements like a better building envelope and more efficient equipment
[2] Compliance Totals include efficiency, photovoltaics and batteries
[3] New Construction, Complete Addition Scope: Building complies when all efficiency and total compliance margins are greater than or equal to zero and unmet load hour limits are not exceeded
Existing, Addition and Alteration Scope: Building complies when efficiency compliance margin is greater than or equal to zero and unmet load hour limits are not exceeded

CERTIFICATE OF COMPLIANCE - NONRESIDENTIAL PERFORMANCE COMPLIANCE METHOD	NRCC-PRF-E
Nonresidential Performance Compliance Method	(Page 4 of 22)

C2. TDV ENERGY COMPLIANCE RESULTS FOR PERFORMANCE COMPONENTS (Annual TDV Energy Use, kBtu/ft² - yr)

COMPLIES[2]

Energy Component	Standard Design (TDV)	Proposed Design (TDV)	Compliance Margin (TDV)[1]
Space Heating	3.48	39.23	-35.75
Space Cooling	261.44	273.86	-12.42
Indoor Fans	270.57	180.52	90.05
Heat Rejection	0	0	0
Pumps & Misc.	0	0	0
Domestic Hot Water	8.58	2.86	5.72
Indoor Lighting	57.69	57.69	0
Flexibility	---	---	---
EFFICIENCY COMPLIANCE TOTAL	**601.76**	**554.16**	**47.6 (7.9%)**
Photovoltaics	-123.55	-78.32	-45.23
Batteries	---	---	---
TOTAL COMPLIANCE	**478.21**	**475.84**	**2.37 (0.5%)**

[1] Notes: This number in parenthesis following the Compliance Margin in column 4, represents the Percent Better than Standard.

CERTIFICATE OF COMPLIANCE - NONRESIDENTIAL PERFORMANCE COMPLIANCE METHOD	NRCC-PRF-E
Nonresidential Performance Compliance Method	(Page 5 of 22)

C3. TDV ENERGY RESULTS FOR NON-REGULATED COMPONENTS[1]

Non-Regulated Energy Component	Standard Design (TDV)	Proposed Design (TDV)	Compliance Margin (TDV)[1]
Receptacle	116.94	116.94	---
Process	780.79	780.79	---
Other Ltg	---	---	---
Process Motors	---	---	---
TOTAL (TOTAL COMPLIANCE + NON-REGULATED COMPONENTS)	**1375.94**	**1373.57**	**2.37 (0.2%)**

[1] Notes: This table is not used for Energy Code Compliance.

CERTIFICATE OF COMPLIANCE - NONRESIDENTIAL PERFORMANCE COMPLIANCE METHOD	NRCC-PRF-E
Nonresidential Performance Compliance Method	(Page 6 of 22)

C4. SOURCE ENERGY COMPLIANCE RESULTS FOR PERFORMANCE COMPONENTS (Annual SOURCE Energy Use, kBtu/ft² /yr)

COMPLIES[2]

Energy Component	Standard Design (SOURCE)	Proposed Design (SOURCE)	Compliance Margin (SOURCE)[1]
Space Heating	1.11	5.91	-4.8
Space Cooling	14.91	15.25	-0.34
Indoor Fans	24.17	16.55	7.62
Heat Rejection	0	0	0
Pumps & Misc.	0	0	0
Domestic Hot Water	2.37	1.03	1.34
Indoor Lighting	5.1	5.1	0
Flexibility	---	---	---
EFFICIENCY COMPLIANCE TOTAL	**47.66**	**43.84**	**3.82 (8%)**
Photovoltaics	-4.73	-2.77	-1.96
Batteries	---	---	---
TOTAL COMPLIANCE	**42.93**	**41.07**	**1.86 (4.3%)**

[1] Notes: This number in parenthesis following the Compliance Margin in column 4, represents the Percent Better than Standard.

CERTIFICATE OF COMPLIANCE - NONRESIDENTIAL PERFORMANCE COMPLIANCE METHOD	NRCC-PRF-E
Nonresidential Performance Compliance Method	(Page 7 of 22)

C5. SOURCE ENERGY RESULTS FOR NON-REGULATED COMPONENTS[1]

Non-Regulated Energy Component	Standard Design (SOURCE)	Proposed Design (SOURCE)	Compliance Margin (SOURCE)[1]
Receptacle	10.27	10.27	---
Process	68.48	68.48	---
Other Ltg	---	---	---
Process Motors	---	---	---
TOTAL (TOTAL COMPLIANCE + NON-REGULATED COMPONENTS)	**121.68**	**119.82**	**1.86 (1.5%)**

[1] Notes: This table is not used for Energy Code Compliance.

C6. 'ABOVE CODE' QUALIFICATIONS

☐ This project is pursuing CalGreen Tier 1 ☐ This project is pursuing CalGreen Tier 2

CERTIFICATE OF COMPLIANCE - NONRESIDENTIAL PERFORMANCE COMPLIANCE METHOD	NRCC-PRF-E
Nonresidential Performance Compliance Method	(Page 8 of 22)

C7. ENERGY USE SUMMARY

Energy Component	Standard Design Site (MWh)	Proposed Design Site (MWh)	Margin (MWh)	Standard Design Site (MBtu)	Proposed Design Site (MBtu)	Margin (MBtu)
Space Heating	---	6.6	---	6	---	---
Space Cooling	37.2	37	0.2	---	---	---
Indoor Fans	47.1	32	15.1	---	---	---
Heat Rejection	---	---	---	---	---	---
Pumps & Misc.	---	---	---	---	---	---
Domestic Hot Water	0.5	---	---	11.2	5.5	5.7
Indoor Lighting	10.1	10.1	0	---	---	---
Flexibility	---	---	---	---	---	---
EFFICIENCY TOTAL	**94.9**	**85.7**	**9.2**	**17.2**	**5.5**	**11.7**
Photovoltaics	-28.4	-17.4	-11	---	---	---
Batteries	---	---	---	---	---	---
ENERGY USE SUBTOTAL	**66.5**	**68.3**	**-1.8**	**17.2**	**5.5**	**11.7**
Receptacle	20.4	20.4	0	---	---	---
Process	137.1	137.1	0	---	---	---
Other Ltg	---	---	---	---	---	---
Process Motors	---	---	---	---	---	---
ENERGY USE TOTAL	**224**	**225.8**	**-1.8**	**17.2**	**5.5**	**11.7**

CERTIFICATE OF COMPLIANCE - NONRESIDENTIAL PERFORMANCE COMPLIANCE METHOD	NRCC-PRF-E
Nonresidential Performance Compliance Method	(Page 9 of 22)

C8. ENERGY USE INTENSITY (EUI)

	Standard Design (kBtu/ft² / yr)	Proposed Design (kBtu/ft² / yr)	Margin (kBtu/ft² / yr)	Margin Percentage
GROSS EUI[1]	177.84	169.12	8.72	4.9
NET EUI[1]	158.22	157.1	1.12	0.71

[1] Notes: Gross EUI is Energy Use Total (not including PV)/Total Building Area. Net EUI is Energy Use Total (including PV)/Total Building Area.

D1. EXCEPTIONAL CONDITIONS

• The project uses the Simplified Geometry Performance Modeling Approach which is not capable of modeling daylighting controls and assumes the prescriptive Secondary Daylit Control requirements are met. PRESCRIPTIVE COMPLIANCE documentation (form NRCC-LTI-02-E) for the requirements of section 140.6(d) Automatic Daylighting Controls in Secondary Daylit Zones is required.
• The user model includes space(s) that are designed to be served by mechanical cooling systems, but the cooling systems were not included in the simulation model. A cooling system has been modeled for both the proposed and standard cases.
• The user model includes space(s) without sufficient cooling equipment. Cooling equipment has been added to the model to meet cooling loads.
• DesignedOccupancyUsedForCalculatingVentilation
• PV/Battery Building Type has been modified from software defaults for one or more spaces. Review project's PV/Battery Building Type(s) with documentation author. Refer to Energy Code section 140.10 for Nonresidential or 170.2(g) for more information.

F1. REQUIRED PV SYSTEMS

01	02	03	04	05	06	07	08	09	10	11	12
DC System Size (kWdc)	Exception[1]	Module Type	Array Type	Power Electronics	CFI	Azimuth (deg)	Tilt Input	Array Angle (deg)	Tilt: (x in 12)	Inverter Eff. (%)	Annual Solar Access (%)
10		Standard (14-17%)	Fixed	none	false	180	Degrees	5.4	1.13	96	100

[1]See Table D1 for any PV exceptions used.

AGENCY

REVIEWED FOR CODE COMPLIANCE BY: WILLDAN ENGINEERING

Approval of these plans & specifications shall not be construed to be a permit for, or an approval of any violation of any Federal, State, County or City laws or ordinances. One set of approved plans must be kept on the job until completion.

9:27:28 AM Jul 21, 2025

FLEWELLING & MOODY
architecture planning interiors

HEADQUARTERS OFFICE:
99 S. Lake Avenue, Suite 300
Pasadena, CA 91101
Phone: 323.543.8300
E-Mail: fm-pasadena@flewelling-moody.com

ANTELOPE VALLEY OFFICE:
1035 West Lancaster Boulevard
Lancaster, California 93534
Phone: 661.949.0771
E-Mail: fm-lancaster@flewelling-moody.com

An Employee Owned Corporation

ARCHITECT

CONSULTANT

Budlong
An MBE|SBE|DBE|LSBE Firm
Glendale|Downtown LA|Fremont|Camarillo
W W W . B U D L O N G . C O M
Job No. 23-140

REGISTERED PROFESSIONAL ENGINEER SUNIL PATEL No. 29448 EXP. 06-30-25 CIVIL STATE OF CALIFORNIA

Drawn by: Author
Check by: Checker

Revisions

No.	Date	Description
	01/26/24	100% DD
	03/01/24	50% CD
	05/09/24	90% CD
	08/05/24	100% CD
	11/25/24	100% CD V2
	01/31/25	100% CD V3

All dimensions must be checked at the job by the contractor who accepts full responsibility for their accuracy under the contract. These plans & the specifications in connection therewith have been prepared for a specific site. Any and all responsibility for their use in whole or in part on any other site is hereby disclaimed by Flewelling & Moody.

CITY OF RIDGECREST

SGT. JOHN PINNEY MEMORIAL POOL REPLACEMENT

205 S WARNER ST, RIDGECREST, CA 93555

Drawing Title

MECHANICAL T-24 FORMS

Job No. 3055-0100

Date 08/07/2024

Sheet No. M7.01

CERTIFICATE OF COMPLIANCE - NONRESIDENTIAL PERFORMANCE COMPLIANCE METHOD — **NRCC-PRF-E**

Nonresidential Performance Compliance Method — **(Page 1 of 22)**

Project Name: SGT. JOHN PINNEY MEMORIAL POOL REPLACEMENT | **Date Prepared:** 2025-06-10

A. General Information

1	Project Name	SGT. JOHN PINNEY MEMORIAL POOL REPLACEMENT			
2	Run Title	Title 24 Analysis			
3	Project Location	205 S WARNER ST			
4	City	RIDGECREST	5	Standards Version	Compliance 2022
6	Zip code	93555	7	Compliance Software (version)	EnergyPro 9.3
8	Climate Zone	14	9	Building Orientation (deg)	0
10	Building Type(s)	• Nonresidential	11	Weather File	PALMDALE_STYP20.epw
12	Project Scope	• New complete scope	13	Number of Dwelling Units	0
14	Total Conditioned Floor Area in Scope (ft²)	4098.51	15	Total # of hotel/motel rooms	0
16	Total Unconditioned Floor Area (ft²)	0	17	Fuel Type	Natural gas
18	Nonresidential Conditioned Floor Area	4098.51	19	Total # of Stories (Habitable Above Grade)	1
20	Residential Conditioned Floor Area	0			

CERTIFICATE OF COMPLIANCE - NONRESIDENTIAL PERFORMANCE COMPLIANCE METHOD — **NRCC-PRF-E**

Nonresidential Performance Compliance Method — **(Page 2 of 22)**

B. PROJECT SUMMARY

Table B shows which building components are included in the performance calculation. If indicated as not included, the project must show compliance prescriptively if within the permit application.

Building Components Complying via Performance						Building Components Complying Prescriptively	
Envelope (See Table G)	Nonres	Performance	Solar Thermal Water Heating (See Table I3)	☐	Performance	The following building components are ONLY eligible for prescriptive compliance and should be documented on the NRCC form listed if within the scope of the permit application (i.e. compliance will not be shown on the NRCC-PRF-E).	
	MultiFam	Not Included		☒	Not Included		
Mechanical (See Table H)	Nonres	Performance	Covered Process: Commercial Kitchens (see Table J)	☐	Performance	Indoor Lighting (Unconditioned) 140.6 & 170.2(e)	NRCC-LTI-E is required
	MultiFam	Not Included		☒	Not Included	Outdoor Lighting 140.7 & 170.2(e)	NRCC-LTO-E is required
Domestic Hot Water (See Table I)	Nonres	Performance	Covered Process: Laboratory Exhaust (see Table J)	☐	Performance	Sign Lighting 140.8 & 170.2(e)	NRCC-LTS-E is required
	MultiFam	Not Included		☒	Not Included	**Building Components Complying with Mandatory Measures**	
Lighting (Indoor Conditioned, see Table K)	Nonres	Performance	Photovoltaics (see Table F)	☒	Performance	Electrical power systems, commissioning, solar ready, elevator and escalator requirements are mandatory and should be documented on the NRCC form listed if applicable (i.e. compliance will not be shown on the NRCC-PRF-E.)	
	MultiFam	Not Included		☐	Not Included	Electrical Power Distribution 110.11	NRCC-ELC-E is required
			Battery (see Table F)	☐	Performance	Commissioning 120.8	NRCC-CXR-E is required
				☒	Not Included	Solar and Battery 110.10	NRCC-SAB-E is required

CERTIFICATE OF COMPLIANCE - NONRESIDENTIAL PERFORMANCE COMPLIANCE METHOD — **NRCC-PRF-E**

Nonresidential Performance Compliance Method — **(Page 3 of 22)**

C1. COMPLIANCE SUMMARY

COMPLIES[3]

	Time Dependent Valuaton (TDV)		Source Energy Use
	Efficiency[1] (kBtu/ft² - yr)	**Total[2] (kBtu/ft² - yr)**	**Total[2] (kBtu/ft² - yr)**
Standard Design	632.49	508.94	46.21
Proposed Design	596.1	501.72	44.54
Compliance Margins	**36.39**	**7.22**	**1.67**
	Pass	**Pass**	**Pass**

[1] Efficiency measures include improvements like a better building envelope and more efficient equipment
[2] Compliance Totals include efficiency, photovoltaics and batteries
[3] New Construction, Complete Addition Scope: Building complies when all efficiency and total compliance margins are greater than or equal to zero and unmet load hour limits are not exceeded
Existing, Addition and Alteration Scope: Building complies when efficiency compliance margin is greater than or equal to zero and unmet load hour limits are not exceeded

CERTIFICATE OF COMPLIANCE - NONRESIDENTIAL PERFORMANCE COMPLIANCE METHOD — **NRCC-PRF-E**

Nonresidential Performance Compliance Method — **(Page 4 of 22)**

C2. TDV ENERGY COMPLIANCE RESULTS FOR PERFORMANCE COMPONENTS (Annual TDV Energy Use, kBtu/ft² - yr)

COMPLIES[2]

Energy Component	Standard Design (TDV)	Proposed Design (TDV)	Compliance Margin (TDV)[1]
Space Heating	10.29	54.78	-44.49
Space Cooling	269.41	278.83	-9.42
Indoor Fans	290.3	204.37	85.93
Heat Rejection	0	0	0
Pumps & Misc.	0	0	0
Domestic Hot Water	7.53	3.16	4.37
Indoor Lighting	54.96	54.96	0
Flexibility	---	---	---
EFFICIENCY COMPLIANCE TOTAL	**632.49**	**596.1**	**36.39 (5.8%)**
Photovoltaics	-123.55	-94.38	-29.17
Batteries	---	---	---
TOTAL COMPLIANCE	**508.94**	**501.72**	**7.22 (1.4%)**

[1] Notes: This number in parenthesis following the Compliance Margin in column 4, represents the Percent Better than Standard.

CERTIFICATE OF COMPLIANCE - NONRESIDENTIAL PERFORMANCE COMPLIANCE METHOD — **NRCC-PRF-E**

Nonresidential Performance Compliance Method — **(Page 5 of 22)**

C3. TDV ENERGY RESULTS FOR NON-REGULATED COMPONENTS[1]

Non-Regulated Energy Component	Standard Design (TDV)	Proposed Design (TDV)	Compliance Margin (TDV)[1]
Receptacle	118.6	118.6	---
Process	726.13	726.13	---
Other Ltg	---	---	---
Process Motors	---	---	---
TOTAL (TOTAL COMPLIANCE + NON-REGULATED COMPONENTS)	**1353.67**	**1346.45**	**7.22 (0.5%)**

[1] Notes: This table is not used for Energy Code Compliance.

CERTIFICATE OF COMPLIANCE - NONRESIDENTIAL PERFORMANCE COMPLIANCE METHOD — **NRCC-PRF-E**

Nonresidential Performance Compliance Method — **(Page 6 of 22)**

C4. SOURCE ENERGY COMPLIANCE RESULTS FOR PERFORMANCE COMPONENTS (Annual SOURCE Energy Use, kBtu/ft² /yr)

COMPLIES[2]

Energy Component	Standard Design (SOURCE)	Proposed Design (SOURCE)	Compliance Margin (SOURCE)[1]
Space Heating	3.29	8.2	-4.91
Space Cooling	14.47	14.89	-0.42
Indoor Fans	25.74	18.81	6.93
Heat Rejection	0	0	0
Pumps & Misc.	0	0	0
Domestic Hot Water	2.59	1.13	1.46
Indoor Lighting	4.85	4.85	0
Flexibility	---	---	---
EFFICIENCY COMPLIANCE TOTAL	**50.94**	**47.88**	**3.06 (6%)**
Photovoltaics	-4.73	-3.34	-1.39
Batteries	---	---	---
TOTAL COMPLIANCE	**46.21**	**44.54**	**1.67 (3.6%)**

[1] Notes: This number in parenthesis following the Compliance Margin in column 4, represents the Percent Better than Standard.

CERTIFICATE OF COMPLIANCE - NONRESIDENTIAL PERFORMANCE COMPLIANCE METHOD — **NRCC-PRF-E**

Nonresidential Performance Compliance Method — **(Page 7 of 22)**

C5. SOURCE ENERGY RESULTS FOR NON-REGULATED COMPONENTS[1]

Non-Regulated Energy Component	Standard Design (SOURCE)	Proposed Design (SOURCE)	Compliance Margin (SOURCE)[1]
Receptacle	10.42	10.42	---
Process	61.97	61.97	---
Other Ltg	---	---	---
Process Motors	---	---	---
TOTAL (TOTAL COMPLIANCE + NON-REGULATED COMPONENTS)	**118.6**	**116.93**	**1.67 (1.4%)**

[1] Notes: This table is not used for Energy Code Compliance.

C6. 'ABOVE CODE' QUALIFICATIONS

☐ This project is pursuing CalGreen Tier 1 ☐ This project is pursuing CalGreen Tier 2

CERTIFICATE OF COMPLIANCE - NONRESIDENTIAL PERFORMANCE COMPLIANCE METHOD — **NRCC-PRF-E**

Nonresidential Performance Compliance Method — **(Page 8 of 22)**

C7. ENERGY USE SUMMARY

Energy Component	Standard Design Site (MWh)	Proposed Design Site (MWh)	Margin (MWh)	Standard Design Site (MBtu)	Proposed Design Site (MBtu)	Margin (MBtu)
Space Heating	---	7.7	---	14.7	---	---
Space Cooling	31.3	31.1	0.2	---	---	---
Indoor Fans	41.2	30	11.2	---	---	---
Heat Rejection	---	---	---	---	---	---
Pumps & Misc.	---	---	---	---	---	---
Domestic Hot Water	0.1	---	---	11.4	5.1	6.3
Indoor Lighting	7.9	7.9	0	---	---	---
Flexibility	---	---	---	---	---	---
EFFICIENCY TOTAL	**80.5**	**76.7**	**3.8**	**26.1**	**5.1**	**21**
Photovoltaics	-23.6	-17.4	-6.2	---	---	---
Batteries	---	---	---	---	---	---
ENERGY USE SUBTOTAL	**56.9**	**59.3**	**-2.4**	**26.1**	**5.1**	**21**
Receptacle	17.1	17.1	0	---	---	---
Process	107.8	107.8	0	---	---	---
Other Ltg	---	---	---	---	---	---
Process Motors	---	---	---	---	---	---
ENERGY USE TOTAL	**181.8**	**184.2**	**-2.4**	**26.1**	**5.1**	**21**

CERTIFICATE OF COMPLIANCE - NONRESIDENTIAL PERFORMANCE COMPLIANCE METHOD — **NRCC-PRF-E**

Nonresidential Performance Compliance Method — **(Page 9 of 22)**

C8. ENERGY USE INTENSITY (EUI)

	Standard Design (kBtu/ft² / yr)	Proposed Design (kBtu/ft² / yr)	Margin (kBtu/ft² / yr)	Margin Percentage
GROSS EUI[1]	177.36	169.08	8.28	4.67
NET EUI[1]	157.72	154.59	3.13	1.98

[1] Notes: Gross EUI is Energy Use Total (not including PV)/Total Building Area. Net EUI is Energy Use Total (including PV)/Total Building Area.

D1. EXCEPTIONAL CONDITIONS

• The project uses the Simplified Geometry Performance Modeling Approach which is not capable of modeling daylighting controls and assumes the prescriptive Secondary Daylit Control requirements are met. PRESCRIPTIVE COMPLIANCE documentation (form NRCC-LTI-02-E) for the requirements of section 140.6(d) Automatic Daylighting Controls in Secondary Daylit Zones is required.
• The user model includes space(s) that are designed to be served by mechanical cooling systems, but the cooling systems were not included in the simulation model. A cooling system has been modeled for both the proposed and standard cases.
• The user model includes space(s) without sufficient cooling equipment. Cooling equipment has been added to the model to meet cooling loads.
• DesignedOccupancyUsedForCalculatingVentilation

F1. REQUIRED PV SYSTEMS

01	02	03	04	05	06	07	08	09	10	11	12
DC System Size (kWdc)	**Exception[1]**	**Module Type**	**Array Type**	**Power Electronics**	**CFI**	**Azimuth (deg)**	**Tilt Input**	**Array Angle (deg)**	**Tilt: (x in 12)**	**Inverter Eff. (%)**	**Annual Solar Access (%)**
10		Standard (14-17%)	Fixed	none	false	180	Degrees	5.4	1.13	96	100

[1]See Table D1 for any PV exceptions used.

AGENCY

FLEWELLING & MOODY
architecture planning interiors

HEADQUARTERS OFFICE:
99 S. Lake Avenue, Suite 300
Pasadena, CA 91101
Phone: 323.543.8300
E-Mail: fm-pasadena@flewelling-moody.com

ANTELOPE VALLEY OFFICE:
1035 West Lancaster Boulevard
Lancaster, California 93534
Phone: 661.949.0771
E-Mail: fm-lancaster@flewelling-moody.com

An Employee Owned Corporation

ARCHITECT

CONSULTANT

Budlong
An MBE|SBE|DBE|LSBE Firm
Glendale|Downtown LA|Fremont|Camarillo
W W W . B U D L O N G . C O M
Job No. 23-140

REGISTERED PROFESSIONAL ENGINEER — JUSTIN PATRICK BUDLONG — No. 29448 — EXP. 06-30-25 — CIVIL — STATE OF CALIFORNIA

Drawn by: Author
Check by: Checker

Revisions

No.	Date	Description
	01/26/24	100% DD
	03/01/24	50% CD
	05/09/24	90% CD
	08/05/24	100% CD
	11/25/24	100% CD V2
	01/31/25	100% CD V3
1	08/27/2025	BID ALTERNATE

All dimensions must be checked at the job by the contractor who accepts full responsibility for their accuracy under the contract. These plans & the specifications in connection therewith have been prepared for a specific site. Any and all responsibility for their use in whole or in part on any other site is hereby disclaimed by Flewelling & Moody.

CITY OF RIDGECREST

SGT. JOHN PINNEY MEMORIAL POOL REPLACEMENT

205 S WARNER ST, RIDGECREST, CA 93555

Drawing Title

MECHANICAL T-24 FORMS

Job No. 3055-0000
Sheet No. M7.01A6
Date 08/07/2024

F1B. PV BATTERY BUILDING TYPE(S)

01	02	03
Building Occupancy Type* (From Table 140.10-A/B and 170.2-U/V)	Conditioned Floor Area (ft²)	Unconditioned Floor Area (ft²)
Grocery	0	0
High-Rise Multifamily	0	0
Office, Financial Institutions, Unleased Tenant Space	4939.18	0
Retail	0	0
School	0	0
Warehouse	0	0
Auditorium, Convention Center, Hotel/Motel, Library, Medical Office Building/Clinic, Restaurant, Theater	0	0
None	0	0

** Building Occupancy Types are defined in Section 100.1 of the Energy Code*

G1. ENVELOPE GENERAL INFORMATION (conditioned spaces only)

01	02	03	04
Opaque Surfaces & Orientation	Total Gross Surface Area (ft²)	Total Fenestration Area (ft²)	Window to Wall Ratio (%)
North-Facing[1]	2112.2	272.36	12.89
East-Facing[2]	1975.6	725.52	36.72
South-Facing[3]	611.6	298.32	48.78
West-Facing[4]	1481.3	49.28	3.33
Total	**6180.7**	**1345.48**	**21.77**
Roof	4939.18	0	0

Notes
[1]North-Facing is oriented to within 45 degrees of true north, including 45 00'00" east of north (NE), but excluding 45 00'00" west of north (NW),
[2]East-Facing is oriented to within 45 degrees of true east, including 45 00'00" south of east (SE), but excluding 45 00'00" north of east (NE),
[3]South-Facing is oriented to within 45 degrees of true south, including 45 00'00" west of south (SW), but excluding 45 00'00" east of south (SE),
[4]West-Facing is oriented to within 45 degrees of true west, including 45 00'00" north of west (NW), but excluding 45 00'00" south of west (SW),

G4. NONRESIDENTIAL AIR BARRIER

01	02
Building Story Name	Air Barrier
Com-Floor 1	No air barrier

G5. OPAQUE SURFACE ASSEMBLY SUMMARY

01	02	03	04	05	06		07	08	09	10
Surface Name	Construction Type	Area (ft²)	Framing Type	Cavity R-Value	Continuous R-Value		Units	Value	Description of Assembly Layers	Status[1]
					Interior	Exterior				
Slab On Grade8	Underground Floor	4,939.18	N/A	0	N/A	N/A	F-factor	0.73	Slab Type =Unheated slab on grade Insulation Orientation =None Insulation R-Value =none	N
23-140 Standing Seam Meta10	Roof	3,528.78	N/A	30	N/A	N/A	U-factor	0.072	Metal Standing Seam - 1/16 in. Composite-1	N
8 CMU Wall12	Exterior Wall	4,815.2	N/A	0	N/A	N/A	U-factor	0.5525	Concrete - Solid Grout - 105 lb/ft3 - 8 in.	N
23-140 Flat Roof21	Roof	1,410.4	Wood	30	N/A	N/A	U-factor	0.0357	Single Ply Roofing - 1/4 in. Plywood - 1/2 in. Vapor permeable felt - 1/8 in. Gypsum Board - 5/8 in. Composite-2	N
8 CMU Wall121	Interior Wall	564.8	N/A	0	N/A	N/A	U-factor	0.431	Concrete - Solid Grout - 105 lb/ft3 - 8 in.	N
Conc Flute- Life Guard Ro43	Exterior Wall	297.5	N/A	0	N/A	N/A	U-factor	0.4673	Concrete - 100 lb/ft3 - 8 in.	N
8 CMU Wall with Ceramic51	Interior Wall	404.6	N/A	0	N/A	N/A	U-factor	0.2793	Concrete - Solid Grout - 105 lb/ft3 - 8 in. Acoustic Tile - 1/2 in.	N
EXT 6 MTL-Staff Office89	Exterior Wall	204	Metal	19	N/A	2.78	U-factor	0.1129	Stucco - 7/8 in. Expanded perlite - organic bonded - 1 in. R2.8 Gypsum Board - 5/8 in. Composite-3 Gypsum Board - 5/8 in.	N
8 CMU Wall with Ceramic511	Exterior Wall	864	N/A	0	N/A	N/A	U-factor	0.3257	Concrete - Solid Grout - 105 lb/ft3 - 8 in. Acoustic Tile - 1/2 in.	N

[1] Status: N - New, A - Altered, E - Existing

G6A. OPAQUE DOOR SUMMARY (NONRESIDENTIAL)

01	02	03	04
Assembly Name	Area (ft²)	Overall U-factor	Status[1]
Insulated Door48	126	0.2	N
Metal Door133	21	0.7	N

[1] Status: N - New, A - Altered, E - Existing

G7A. FENESTRATION ASSEMBLY SUMMARY (NONRESIDENTIAL)

01	02	03	04	05	06	07	08	09
Fenestration Assembly Name	Fenestration Type/ Product Type / Frame Type	Certification Method[1]	Assembly Method	Area (ft²)	Overall U-factor	Overall SHGC	Overall VT	Status[2]
Residential Cooling	Vertical fenestration Fixed window N/A	NFRC	Manufactured	934.42	0.3	0.23	0.5	N
IG-2 Solarban 70 XL	Vertical fenestration Fixed window N/A	NFRC	Site built	411.06	0.47	0.25	0.55	N

[1] Notes: Newly installed fenestration shall have a certified NFRC Label Certificate or use the CEC default tables found in Table 110.6-A and Table 110.6-B. Center of Glass (COG) values are for the glass-only, determined by the manufacturer, and are shown for ease of verification. Site-built fenestration values are calculated per Nonresidential Appendix NA6 and are used in the analysis.
[2] Status: N - New, A - Altered, E - Existing

H1. DRY SYSTEM EQUIPMENT (FURNACES, AIR HANDLING UNITS, HEAT PUMPS, VRF, ECONOMIZERS ETC.)

01	02	03	04	05	06	07	08	09	10	11	12
Equipment Name	Equipment Type	Qty	Heating				Cooling			Economizer Type (if present)	Status[1]
			Total Heating Output (kBtu/h)	Supp Heat Output (kBtu/h)	Efficiency Unit	Efficiency	Total Cooling Output (kBtu/h)	Efficiency Unit	Efficiency		
FCU-7/HP-1 Kitchen Servi	Single Zone Heat Pump (SZHP) Air System	1	27	0	COP HSPF2	4.35 10.3	24	EER2 SEER2	12.4 19.4	Differential Enthalpy	N
FCU-8/HP-2 MDF # 107	Single Zone Heat Pump (SZHP) Air System	1	12	0	COP HSPF	4.6 13	12	EER SEER	14 25.5	No Economizer	N
DOAS Womens /Mens Locke	Single Zone Heat Pump (SZHP) Air System	1	116	0	COP	3.4	118	EER	11	No Economizer	N
FCU-9/HP-3 Electrical Roo	Single Zone Heat Pump (SZHP) Air System	1	12	0	COP HSPF	4.6 13	12	EER SEER	14 25.5	No Economizer	N
Fire Sprinkler Riser Room	Single Zone Air Conditioner	1	17.1	0	N/A	NA - See Electric Resistance	0	N/A	NA	N/A	N
CU-1 Front Desk/Admin/Sic	Variable Refrigerant Flow	1	108	N/A	COP	4.1	96	EER	14	N/A	N
CU-2 Community Room # 20	Variable Refrigerant Flow	1	66	N/A	COP HSPF	9.8 9.8	60	EER SEER	14 18.4	N/A	N

[1] Status: N - New, A - Altered, E - Existing

H3. NONRESIDENTIAL / COMMON USE AREA FAN SYSTEMS SUMMARY

01	02	03	04	05	06	07	08	09	10	11	12	13
Name or Item Tag	Qty	Design OA CFM	Supply Fan				Return / Relief Fan					Status[1]
			CFM	Power	Power Units	Control	Fan Type	CFM	Power	Power Units	Control	
FCU-7/HP-1 Kitchen Servi	1	94.53	775	0.33	BHP	Constant Vol	N/A	N/A	N/A	N/A	N/A	N
FCU-8/HP-2 MDF # 107	1	0	382	0.14	BHP	Constant Vol	N/A	N/A	N/A	N/A	N/A	N
DOAS Womens /Mens Locke	1	391.75	2,000	2.4	BHP	Constant Vol	N/A	N/A	N/A	N/A	N/A	N
FCU-9/HP-3 Electrical Roo	1	0	382	0.14	BHP	Constant Vol	N/A	N/A	N/A	N/A	N/A	N
2-FCU-1 Front Desk # 101 L-VRF	1	225	2,235	1.3	BHP	Constant Vol	N/A	N/A	N/A	N/A	N/A	N
3-FCU-2 Admin Office # 102-VRF	1	17.75	318	0.2	BHP	Constant Vol	N/A	N/A	N/A	N/A	N/A	N
4-FCU-3 Sick Bay # 105-VRF	1	15	318	0.2	BHP	Constant Vol	N/A	N/A	N/A	N/A	N/A	N
5-FCU-4 Life Guard Facilit-VRF	1	80.08	589	0.2	BHP	Constant Vol	N/A	N/A	N/A	N/A	N/A	N
6-FCU-5 & 6 Community Room-VRF	2	187.5	742	0.2	BHP	Constant Vol	N/A	N/A	N/A	N/A	N/A	N
Fire Sprinkler Riser Room	1	0	400	0.02	BHP	Constant Vol	N/A	N/A	N/A	N/A	N/A	N

[1] Status: N - New, A - Altered, E - Existing

H5. GENERAL EXHAUST FAN SUMMARY

01	02	03	04	05	06	07	08
System ID	Zone Name	Qty	CFM	Power	Power Units	Continuous Operation?	Status[1]
Service Kitchen # 18/Conc67-EF	6-Service Kitchen # 18/Conc	1	400	0.09	BHP	No	N
Womens/Mens Locker Room99-EF	8-Womens/Mens Locker Room	1	700	0.75	BHP	No	N

[1] Status: N - New, A - Altered, E - Existing

H8. SYSTEM SPECIAL FEATURES

01	02	03	04
System Name	Equipment Type	Interlocks per 140.4(n)[1]	Other Special Features and Controls
FCU-7/HP-1 Kitchen Servi	Single Zone Heat Pump (SZHP) Air System	N/A	Differential Enthalpy
Undefined Plant1 - SHW	Service Hot Water	N/A	Fixed Temperature Control

Notes: This table includes controls related to the performance path only. For projects using the prescriptive path, mandatory and prescriptive controls requirements are documented on the NRCC-MCH-E.

[1] Yes = interlocks are provided, No = interlocks are not provided, NA means no operable openings.

H9. NONRESIDENTIAL / COMMON USE AREA & HOTEL/MOTEL VENTILATION

01	02	03	04	05	06	07
Zone Name	Mechanical Ventilation				Conditioned Area (sf)	DCV or Occupant Sensor Controls, or Both
	Ventilation Function	# of People	Supply OA CFM	Exhaust CFM		
1-FCU-1 Front Desk # 101 L	Office - Reception areas	15	225	0	1129.7	N/A
2-FCU-2 Admin Office # 102	Office - Office space	0.59	17.75	0	118.33	N/A
3-FCU-3 Sick Bay # 105	Office - Office space	1	15	0	90	N/A

H9. NONRESIDENTIAL / COMMON USE AREA & HOTEL/MOTEL VENTILATION

01	02	03	04	05	06	07
Zone Name	Mechanical Ventilation				Conditioned Area (sf)	DCV or Occupant Sensor Controls, or Both
	Ventilation Function	# of People	Supply OA CFM	Exhaust CFM		
4-FCU-4 Life Guard Facilit	Office - Office space	4.59	80.08	0	533.87	N/A
5-FCU-5 & 6 Community Room	Lodging - Multipurpose assembly	25	375	0	840.67	N/A
6-Service Kitchen # 18/Conc	Food Service - Kitchen (cooking)	6.3	94.53	400	567.22	N/A
7-FCU-8/HP-2 MDF # 107	Exhaust - Refrigerating machinery rooms	0.14	0	0	90	N/A
8-Womens/Mens Locker Room	Exhaust - All other locker rooms	26.12	391.75	700	1442.39	N/A
9-FCU-9/HP-3 Electrical Roo	General - Unoccupied	0.15	0	0	102	N/A
10-Fire Sprinkler Riser Room	General - Unoccupied	0.04	0	0	25	N/A

H11. ZONAL SYSTEM AND TERMINAL UNIT SUMMARY

01	02	03	04	05	06	07	08	09	10	11	12
System ID	System Type	Qty	Rated Capacity (kBtuh)		Airflow (cfm)			Fan			VSD
			Heating	Cooling	Design	Min.	Min. Ratio	Power	Power Units	Cycles	
6-Service Kitchen # 18/Conc-Trm	Uncontrolled	1	N/A	N/A	775	N/A	0	N/A	N/A	N/A	☐
7-FCU-8/HP-2 MDF # 107-Trm	Uncontrolled	1	N/A	N/A	382	N/A	0	N/A	N/A	N/A	☐
8-Womens/Mens Locker Room-Trm	Uncontrolled	1	N/A	N/A	2,000	N/A	0	N/A	N/A	N/A	☐

H11. ZONAL SYSTEM AND TERMINAL UNIT SUMMARY

01	02	03	04	05	06	07	08	09	10	11	12
System ID	System Type	Qty	Rated Capacity (kBtuh)		Airflow (cfm)			Fan			VSD
			Heating	Cooling	Design	Min.	Min. Ratio	Power	Power Units	Cycles	
9-FCU-9/HP-3 Electrical Roo-Trm	Uncontrolled	1	N/A	N/A	382	N/A	0	N/A	N/A	N/A	☐
2-FCU-1 Front Desk # 101 L-VRF	Variable Refrigerant Flow	1	81	72	2,235	N/A	N/A	1.3	BHP	Continuous	☐
3-FCU-2 Admin Office # 102-VRF	Variable Refrigerant Flow	1	8.5	7.5	318	N/A	N/A	0.2	BHP	Continuous	☐
4-FCU-3 Sick Bay # 105-VRF	Variable Refrigerant Flow	1	8.5	7.5	318	N/A	N/A	0.2	BHP	Continuous	☐
5-FCU-4 Life Guard Facilit-VRF	Variable Refrigerant Flow	1	13.5	12	589	N/A	N/A	0.2	BHP	Continuous	☐
6-FCU-5 & 6 Community Room-VRF	Variable Refrigerant Flow	2	34	30	742	N/A	N/A	0.2	BHP	Continuous	☐
Fire Sprinkler Riser Room	Single Zone Air Conditioner	1	17.1	0	400	N/A	N/A	0.02	BHP	Continuous	☐
PropNoClg-NonResZnSys	Single Zone Air Conditioner	1	0	3.93	128.28	N/A	N/A	0	W/cfm	Cycling	☐
PropNoClg-NonResZnSys-2	Single Zone Air Conditioner	1	0	17.17	560	N/A	N/A	0	W/cfm	Cycling	☐
PropNoClg-NonResZnSys-3	Single Zone Air Conditioner	2	0	46.06	1,502.31	N/A	N/A	0	W/cfm	Cycling	☐
PropNoClg-NonResZnSys-4	Single Zone Air Conditioner	1	0	25.23	819.04	N/A	N/A	0	W/cfm	Cycling	☐
PropNoClg-NonResZnSys-5	Single Zone Air Conditioner	1	0	3.36	109.45	N/A	N/A	0	W/cfm	Cycling	☐

AGENCY

REVIEWED FOR CODE COMPLIANCE BY: WILLDAN ENGINEERING

Approval of these plans & specifications shall not be construed to be a permit for, or an approval of any violation of any Federal, State, County or City laws or ordinances. One set of approved plans must be kept on the job until completion.

9:27:30 AM Jul 21, 2025

FLEWELLING & MOODY
architecture planning interiors

HEADQUARTERS OFFICE:
99 S. Lake Avenue, Suite 300
Pasadena, CA 91101
Phone: 323.543.8300
E-Mail: fm-pasadena@flewelling-moody.com

ANTELOPE VALLEY OFFICE:
1035 West Lancaster Boulevard
Lancaster, California 93534
Phone: 661.949.0771
E-Mail: fm-lancaster@flewelling-moody.com

An Employee Owned Corporation

ARCHITECT

CONSULTANT

Budlong
An MBE|SBE|DBE|LSBE Firm
Glendale|Downtown LA|Fremont|Camarillo
W W W . B U D L O N G . C O M
Job No. 23-140

REGISTERED PROFESSIONAL ENGINEER — DANIEL PATRICK BUDLONG — No. 29448 — EXP. 06-30-25 — STATE OF CALIFORNIA

Drawn by: Author

Check by: Checker

Revisions

No.	Date	Description
	01/26/24	100% DD
	03/01/24	50% CD
	05/09/24	90% CD
	08/05/24	100% CD
	11/25/24	100% CD V2
	01/31/25	100% CD V3

All dimensions must be checked at the job by the contractor who accepts full responsibility for their accuracy under the contract. These plans & the specifications in connection therewith have been prepared for a specific site. Any and all responsibility for their use in whole or in part on any other site is hereby disclaimed by Flewelling & Moody.

CITY OF RIDGECREST

SGT. JOHN PINNEY MEMORIAL POOL REPLACEMENT

205 S WARNER ST, RIDGECREST, CA 93555

Drawing Title

MECHANICAL T-24 FORMS

Job No. 3055-0100

Date 08/07/2024

Sheet No. M7.02

CERTIFICATE OF COMPLIANCE - NONRESIDENTIAL PERFORMANCE COMPLIANCE METHOD NRCC-PRF-E

Nonresidential Performance Compliance Method (Page 10 of 22)

F1B. PV BATTERY BUILDING TYPE(S)

01	02	03
Building Occupancy Type* (From Table 140.10-A/B and 170.2-U/V)	Conditioned Floor Area (ft²)	Unconditioned Floor Area (ft²)
Grocery	0	0
High-Rise Multifamily	0	0
Office, Financial Institutions, Unleased Tenant Space	4098.51	0
Retail	0	0
School	0	0
Warehouse	0	0
Auditorium, Convention Center, Hotel/Motel, Library, Medical Office Building/Clinic, Restaurant, Theater	0	0
None	0	0

** Building Occupancy Types are defined in Section 100.1 of the Energy Code*

G1. ENVELOPE GENERAL INFORMATION (conditioned spaces only)

01	02	03	04
Opaque Surfaces & Orientation	Total Gross Surface Area (ft²)	Total Fenestration Area (ft²)	Window to Wall Ratio (%)
North-Facing[1]	2050.4	119.6	5.83
East-Facing[2]	1660	603.84	36.38
South-Facing[3]	611.6	298.32	48.78
West-Facing[4]	1118.9	0	0
Total	**5440.9**	**1021.76**	**18.78**
Roof	4098.51	0	0

Notes
[1]North-Facing is oriented to within 45 degrees of true north, including 45 00'00" east of north (NE), but excluding 45 00'00" west of north (NW),
[2]East-Facing is oriented to within 45 degrees of true east, including 45 00'00" south of east (SE), but excluding 45 00'00" north of east (NE),
[3]South-Facing is oriented to within 45 degrees of true south, including 45 00'00" west of south (SW), but excluding 45 00'00" east of south (SE),
[4]West-Facing is oriented to within 45 degrees of true west, including 45 00'00" north of west (NW), but excluding 45 00'00" south of west (SW),

CERTIFICATE OF COMPLIANCE - NONRESIDENTIAL PERFORMANCE COMPLIANCE METHOD NRCC-PRF-E

Nonresidential Performance Compliance Method (Page 11 of 22)

G4. NONRESIDENTIAL AIR BARRIER

01	02
Building Story Name	Air Barrier
Com-Floor 1	No air barrier

CERTIFICATE OF COMPLIANCE - NONRESIDENTIAL PERFORMANCE COMPLIANCE METHOD NRCC-PRF-E

Nonresidential Performance Compliance Method (Page 12 of 22)

G5. OPAQUE SURFACE ASSEMBLY SUMMARY

01	02	03	04	05	06		07	08	09	10
Surface Name	Construction Type	Area (ft²)	Framing Type	Cavity R-Value	Continuous R-Value		Units	Value	Description of Assembly Layers	Status[1]
					Interior	Exterior				
Slab On Grade8	Underground Floor	4,098.51	N/A	0	N/A	N/A	F-factor	0.73	Slab Type =Unheated slab on grade Insulation Orientation =None Insulation R-Value =none	N
23-140 Standing Seam Meta10	Roof	2,688.11	N/A	30	N/A	N/A	U-factor	0.072	Metal Standing Seam - 1/16 in. Composite-1	N
8 CMU Wall12	Exterior Wall	4,075.4	N/A	0	N/A	N/A	U-factor	0.5525	Concrete - Solid Grout - 105 lb/ft3 - 8 in.	N
23-140 Flat Roof21	Roof	1,410.4	Wood	30	N/A	N/A	U-factor	0.0357	Single Ply Roofing - 1/4 in. Plywood - 1/2 in. Vapor permeable felt - 1/8 in. Gypsum Board - 5/8 in. Composite-2	N
8 CMU Wall121	Interior Wall	564.8	N/A	0	N/A	N/A	U-factor	0.431	Concrete - Solid Grout - 105 lb/ft3 - 8 in.	N
Conc Flute- Life Guard Ro43	Exterior Wall	297.5	N/A	0	N/A	N/A	U-factor	0.4673	Concrete - 100 lb/ft3 - 8 in.	N
8 CMU Wall with Ceramic51	Interior Wall	404.6	N/A	0	N/A	N/A	U-factor	0.2793	Concrete - Solid Grout - 105 lb/ft3 - 8 in. Acoustic Tile - 1/2 in.	N
EXT 6 MTL-Staff Office80	Exterior Wall	204	Metal	19	N/A	2.78	U-factor	0.1129	Stucco - 7/8 in. Expanded perlite - organic bonded - 1 in. R2.8 Gypsum Board - 5/8 in. Composite-3 Gypsum Board - 5/8 in.	N
8 CMU Wall with Ceramic511	Exterior Wall	864	N/A	0	N/A	N/A	U-factor	0.3257	Concrete - Solid Grout - 105 lb/ft3 - 8 in. Acoustic Tile - 1/2 in.	N

[1] Status: N - New, A - Altered, E - Existing

CERTIFICATE OF COMPLIANCE - NONRESIDENTIAL PERFORMANCE COMPLIANCE METHOD NRCC-PRF-E

Nonresidential Performance Compliance Method (Page 13 of 22)

G6A. OPAQUE DOOR SUMMARY (NONRESIDENTIAL)

01	02	03	04
Assembly Name	Area (ft²)	Overall U-factor	Status[1]
Insulated Door48	126	0.2	N
Metal Door124	21	0.7	N

[1] Status: N - New, A - Altered, E - Existing

G7A. FENESTRATION ASSEMBLY SUMMARY (NONRESIDENTIAL)

01	02	03	04	05	06	07	08	09
Fenestration Assembly Name	Fenestration Type/ Product Type / Frame Type	Certification Method[1]	Assembly Method	Area (ft²)	Overall U-factor	Overall SHGC	Overall VT	Status[2]
Residential Cooling	Vertical fenestration Fixed window N/A	NFRC	Manufactured	934.42	0.3	0.23	0.5	N
IG-2 Solarban 70 XL	Vertical fenestration Fixed window N/A	NFRC	Site built	87.34	0.47	0.25	0.55	N

[1] Notes: Newly installed fenestration shall have a certified NFRC Label Certificate or use the CEC default tables found in Table 110.6-A and Table 110.6-B. Center of Glass (COG) values are for the glass-only, determined by the manufacturer, and are shown for ease of verification. Site-built fenestration values are calculated per Nonresidential Appendix NA6 and are used in the analysis.
[2] Status: N - New, A - Altered, E - Existing

CERTIFICATE OF COMPLIANCE - NONRESIDENTIAL PERFORMANCE COMPLIANCE METHOD NRCC-PRF-E

Nonresidential Performance Compliance Method (Page 14 of 22)

H1. DRY SYSTEM EQUIPMENT (FURNACES, AIR HANDLING UNITS, HEAT PUMPS, VRF, ECONOMIZERS ETC.)

01	02	03	04	05	06	07	08	09	10	11	12
Equipment Name	Equipment Type	Qty	Heating				Cooling			Economizer Type (if present)	Status[1]
			Total Heating Output (kBtu/h)	Supp Heat Output (kBtu/h)	Efficiency Unit	Efficiency	Total Cooling Output (kBtu/h)	Efficiency Unit	Efficiency		
FCU-7/HP-1 Kitchen Servi	Single Zone Heat Pump (SZHP) Air System	1	27	0	COP HSPF2	4.35 10.3	24	EER2 SEER2	12.4 19.4	Differential Enthalpy	N
FCU-8/HP-2 MDF # 107	Single Zone Heat Pump (SZHP) Air System	1	12	0	COP HSPF	4.6 13	12	EER SEER	14 25.5	No Economizer	N
DOAS Womens /Mens Locke	Single Zone Heat Pump (SZHP) Air System	1	116	0	COP	3.4	118	EER	11	No Economizer	N
FCU-9/HP-3 Electrical Roo	Single Zone Heat Pump (SZHP) Air System	1	12	0	COP HSPF	4.6 13	12	EER SEER	14 25.5	No Economizer	N
Fire Sprinkler Riser Room	Single Zone Air Conditioner	1	17.1	0	N/A	NA - See Electric Resistance	0	N/A	NA	N/A	N
CU-1 Front Desk/Admin/Sic	Variable Refrigerant Flow	1	108	N/A	COP	4.1	96	EER	13.5	N/A	N

[1] Status: N - New, A - Altered, E - Existing

CERTIFICATE OF COMPLIANCE - NONRESIDENTIAL PERFORMANCE COMPLIANCE METHOD NRCC-PRF-E

Nonresidential Performance Compliance Method (Page 15 of 22)

H3. NONRESIDENTIAL / COMMON USE AREA FAN SYSTEMS SUMMARY

01	02	03	04	05	06	07	08	09	10	11	12	13
Name or Item Tag	Qty	Design OA CFM	Supply Fan				Return / Relief Fan					Status[1]
			CFM	Power	Power Units	Control	Fan Type	CFM	Power	Power Units	Control	
FCU-7/HP-1 Kitchen Servi	1	94.53	775	0.33	BHP	Constant Vol	N/A	N/A	N/A	N/A	N/A	N
FCU-8/HP-2 MDF # 107	1	0	382	0.14	BHP	Constant Vol	N/A	N/A	N/A	N/A	N/A	N
DOAS Womens /Mens Locke	1	391.75	2,000	2.4	BHP	Constant Vol	N/A	N/A	N/A	N/A	N/A	N
FCU-9/HP-3 Electrical Roo	1	0	382	0.14	BHP	Constant Vol	N/A	N/A	N/A	N/A	N/A	N
2-FCU-1 Front Desk # 101 L-VRF	1	225	2,235	1.3	BHP	Constant Vol	N/A	N/A	N/A	N/A	N/A	N
3-FCU-2 Admin Office # 102-VRF	1	17.75	318	0.2	BHP	Constant Vol	N/A	N/A	N/A	N/A	N/A	N
4-FCU-3 Sick Bay # 105-VRF	1	15	318	0.2	BHP	Constant Vol	N/A	N/A	N/A	N/A	N/A	N
5-FCU-4 Life Guard Facilit-VRF	1	80.08	589	0.2	BHP	Constant Vol	N/A	N/A	N/A	N/A	N/A	N
Fire Sprinkler Riser Room	1	0	400	0.02	BHP	Constant Vol	N/A	N/A	N/A	N/A	N/A	N

[1] Status: N - New, A - Altered, E - Existing

CERTIFICATE OF COMPLIANCE - NONRESIDENTIAL PERFORMANCE COMPLIANCE METHOD NRCC-PRF-E

Nonresidential Performance Compliance Method (Page 16 of 22)

H5. GENERAL EXHAUST FAN SUMMARY

01	02	03	04	05	06	07	08
System ID	Zone Name	Qty	CFM	Power	Power Units	Continuous Operation?	Status[1]
Service Kitchen #119 /Con56-EF	5-Service Kitchen #119 /Con	1	400	0.09	BHP	No	N
Womens/Mens Locker Room90-EF	7-Womens/Mens Locker Room	1	700	0.75	BHP	No	N

[1] Status: N - New, A - Altered, E - Existing

H8. SYSTEM SPECIAL FEATURES

01	02	03	04
System Name	Equipment Type	Interlocks per 140.4(n)[1]	Other Special Features and Controls
FCU-7/HP-1 Kitchen Servi	Single Zone Heat Pump (SZHP) Air System	N/A	Differential Enthalpy
Undefined Plant1 - SHW	Service Hot Water	N/A	Fixed Temperature Control

Notes: This table includes controls related to the performance path only. For projects using the prescriptive path, mandatory and prescriptive controls requirements are documented on the NRCC-MCH-E.
[1] Yes = interlocks are provided, No = interlocks are not provided, NA means no operable openings.

H9. NONRESIDENTIAL / COMMON USE AREA & HOTEL/MOTEL VENTILATION

01	02	03	04	05	06	07
Zone Name	Mechanical Ventilation				Conditioned Area (sf)	DCV or Occupant Sensor Controls, or Both
	Ventilation Function	# of People	Supply OA CFM	Exhaust CFM		
1-FCU-1 Front Desk # 101 L	Office - Reception areas	15	225	0	1129.7	N/A
2-FCU-2 Admin Office # 102	Office - Office space	0.59	17.75	0	118.33	N/A
3-FCU-3 Sick Bay # 105	Office - Office space	1	15	0	90	N/A

CERTIFICATE OF COMPLIANCE - NONRESIDENTIAL PERFORMANCE COMPLIANCE METHOD NRCC-PRF-E

Nonresidential Performance Compliance Method (Page 17 of 22)

H9. NONRESIDENTIAL / COMMON USE AREA & HOTEL/MOTEL VENTILATION

01	02	03	04	05	06	07
Zone Name	Mechanical Ventilation				Conditioned Area (sf)	DCV or Occupant Sensor Controls, or Both
	Ventilation Function	# of People	Supply OA CFM	Exhaust CFM		
4-FCU-4 Life Guard Facilit	Office - Office space	4.59	80.08	0	533.87	N/A
5-Service Kitchen #119 /Con	Food Service - Kitchen (cooking)	6.3	94.53	400	567.22	N/A
6-FCU-8/HP-2 MDF # 107	Exhaust - Refrigerating machinery rooms	0.14	0	0	90	N/A
7-Womens/Mens Locker Room	Exhaust - All other locker rooms	26.12	391.75	700	1442.39	N/A
8-FCU-9/HP-3 Electrical Roo	General - Unoccupied	0.15	0	0	102	N/A
9-Fire Sprinkler Riser Room	General - Unoccupied	0.04	0	0	25	N/A

H11. ZONAL SYSTEM AND TERMINAL UNIT SUMMARY

01	02	03	04	05	06	07	08	09	10	11	12
System ID	System Type	Qty	Rated Capacity (kBtuh)		Airflow (cfm)			Fan			VSD
			Heating	Cooling	Design	Min.	Min. Ratio	Power	Power Units	Cycles	
5-Service Kitchen #119 /Con-Trm	Uncontrolled	1	N/A	N/A	775	N/A	0	N/A	N/A	N/A	☐
6-FCU-8/HP-2 MDF # 107-Trm	Uncontrolled	1	N/A	N/A	382	N/A	0	N/A	N/A	N/A	☐
7-Womens/Mens Locker Room-Trm	Uncontrolled	1	N/A	N/A	2,000	N/A	0	N/A	N/A	N/A	☐
8-FCU-9/HP-3 Electrical Roo-Trm	Uncontrolled	1	N/A	N/A	382	N/A	0	N/A	N/A	N/A	☐

CERTIFICATE OF COMPLIANCE - NONRESIDENTIAL PERFORMANCE COMPLIANCE METHOD NRCC-PRF-E

Nonresidential Performance Compliance Method (Page 18 of 22)

H11. ZONAL SYSTEM AND TERMINAL UNIT SUMMARY

01	02	03	04	05	06	07	08	09	10	11	12
System ID	System Type	Qty	Rated Capacity (kBtuh)		Airflow (cfm)			Fan			VSD
			Heating	Cooling	Design	Min.	Min. Ratio	Power	Power Units	Cycles	
2-FCU-1 Front Desk # 101 L-VRF	Variable Refrigerant Flow	1	81	72	2,235	N/A	N/A	1.3	BHP	Continuous	☐
3-FCU-2 Admin Office # 102-VRF	Variable Refrigerant Flow	1	8.5	7.5	318	N/A	N/A	0.2	BHP	Continuous	☐
4-FCU-3 Sick Bay # 105-VRF	Variable Refrigerant Flow	1	8.5	7.5	318	N/A	N/A	0.2	BHP	Continuous	☐
5-FCU-4 Life Guard Facilit-VRF	Variable Refrigerant Flow	1	13.5	12	589	N/A	N/A	0.2	BHP	Continuous	☐
Fire Sprinkler Riser Room	Single Zone Air Conditioner	1	17.1	0	400	N/A	N/A	0.02	BHP	Continuous	☐
PropNoClg-NonResZnSys	Single Zone Air Conditioner	1	0	4.86	158.4	N/A	N/A	0	W/cfm	Cycling	☐
PropNoClg-NonResZnSys-2	Single Zone Air Conditioner	1	0	18.76	612.02	N/A	N/A	0	W/cfm	Cycling	☐
PropNoClg-NonResZnSys-3	Single Zone Air Conditioner	1	0	47.95	1,564.18	N/A	N/A	0	W/cfm	Cycling	☐
PropNoClg-NonResZnSys-4	Single Zone Air Conditioner	1	0	4.09	133.27	N/A	N/A	0	W/cfm	Cycling	☐

I1. WATER HEATER EQUIPMENT SUMMARY

01	02	03	04	05	06	07	08	09	10	11	12	13	14
Name	Heater Element Type	Tank Type	Qty	Tank Vol (gal)	Rated Input	Rated Input Unit	Efficiency	Efficiency Unit	Tank Insulation R-value Int/Ext	Standby Loss Fraction	1st Hr. Rating or Flow Rate (gal)	Heat Pump Type	Tank Location or Ambient Condition
A O Smith ACI-CRS-22WM-N2	Natural Gas	Instantaneous	5	1	199	kBtu/Hr	0.93	UEF	N/A	N/A	0	N/A	N/A

AGENCY

FLEWELLING & MOODY
architecture planning interiors

HEADQUARTERS OFFICE:
99 S. Lake Avenue, Suite 300
Pasadena, CA 91101
Phone: 323.543.8300
E-Mail: fm-pasadena@flewelling-moody.com

ANTELOPE VALLEY OFFICE:
1035 West Lancaster Bouldvard
Lancaster, California 93534
Phone: 661.949.0771
E-Mail: fm-lancaster@flewelling-moody.com

An Employee Owned Corporation

ARCHITECT

CONSULTANT

Budlong
An MBE|SBE|DBE|LSBE Firm
Glendale|Downtown LA|Fremont|Camarillo
W W W . B U D L O N G . C O M
Job No. 23-140

REGISTERED PROFESSIONAL ENGINEER SUNIL PATEL No. 29448 EXP. 06-30-25 CIVIL STATE OF CALIFORNIA

Drawn by: Author

Check by: Checker

Revisions

No.	Date	Description
	01/26/24	100% DD
	03/01/24	50% CD
	05/09/24	90% CD
	08/05/24	100% CD
	11/25/24	100% CD V2
	01/31/25	100% CD V3
1	08/27/2025	BID ALTERNATE

All dimensions must be checked at the job by the contractor who accepts full responsibility for their accuracy under the contract. These plans & the specifications in connection therewith have been prepared for a specific site. Any and all responsibility for their use in whole or in part on any other site is hereby disclaimed by Flewelling & Moody.

CITY OF RIDGECREST

SGT. JOHN PINNEY MEMORIAL POOL REPLACEMENT

205 S WARNER ST, RIDGECREST, CA 93555

Drawing Title

MECHANICAL T-24 FORMS

Job No. 3055-0000

Sheet No. M7.02A6

Date 08/07/2024

CERTIFICATE OF COMPLIANCE - NONRESIDENTIAL PERFORMANCE COMPLIANCE METHOD	NRCC-PRF-E
Nonresidential Performance Compliance Method	(Page 19 of 22)

II. WATER HEATER EQUIPMENT SUMMARY

01	02	03	04	05	06	07	08	09	10	11	12	13	14
Name	Heater Element Type	Tank Type	Qty	Tank Vol (gal)	Rated Input	Rated Input Unit	Efficiency	Efficiency Unit	Tank Insulation R-value Int/Ext	Standby Loss Fraction	1st Hr. Rating or Flow Rate (gal)	Heat Pump Type	Tank Location or Ambient Condition
A O Smith ACI-CRS-22WM-N2	Natural Gas	Instantaneous	5	1	199	kBtu/Hr	0.93	UEF	N/A	N/A	0	N/A	N/A

K1. INDOOR CONDITIONED LIGHTING GENERAL INFO

01	02	03	04	05	06
Occupancy Type[1]	Conditioned Floor Area[2] (ft²)	Installed Lighting Power (Watts)	Lighting Control Credits (Watts)	Additional (Custom) Allowance	
				Area Category Footnotes (Watts)	Area Category Footnotes (Watts)
Convention, Conference, Multipurpose and Meeting Center	840.67	630.5	0	0	0
Electrical Mechanical Telephone Room	217	86.8	0	0	0
Kitchen/ Food Preparation	567.22	538.86	0	0	0
Locker/Dressing Room	1442.39	649.08	0	0	0
Lounge	1129.7	621.34	0	0	0
Office (250 square feet)	742.2	482.43	0	0	0
Building Totals:	**4939.18**	**3009.01**	**0**	**0**	**0**

[1]*See Table 140.6-C*
[2]*See NRCC-LTI–E for unconditioned spaces*
[3]*Lighting information for existing spaces modeled is not included in this table*

K4. INDOOR CONDITIONED LIGHTING MANDATORY LIGHTING CONTROL

CERTIFICATE OF COMPLIANCE - NONRESIDENTIAL PERFORMANCE COMPLIANCE METHOD	NRCC-PRF-E
Nonresidential Performance Compliance Method	(Page 22 of 22)

Documentation Author's Declaration Statement

1. I certify that this Certificate of Compliance documentation is accurate and complete.

Documentation Author Name: Saeid Hashemi	Documentation Author Signature:
Company: Budlong & Associates	Signature Date: 2025-04-30
Address: 700 N. Central Ave. Suite 520	CEA/HERS Certification Identification (if applicable):
City/State/Zip: Glendale, CA 91203	Phone: (818) 638-8780

Responsible Person's Declaration statement

I certify the following under penalty of perjury, under the laws of the State of California:

1. The information provided on this Certificate of Compliance is true and correct.
2. I am eligible under Division 3 of the Business and Professions Code to accept responsibility for the building design or system design identified on this Certificate of Compliance (responsible designer)
3. The energy features and performance specifications, materials, components, and manufactured devices for the building design or system design identified on this Certificate of Compliance conform to the requirements of Title 24, Part 1 and Part 6 of the California Code of Regulations.
4. The building design features or system design features identified on this Certificate of Compliance are consistent with the information provided on other applicable compliance documents, worksheets, calculations, plans and specifications submitted to the enforcement agency for approval with this building permit application.
5. I understand that a registered copy of this Certificate of Compliance shall be made available with the building permit(s) issued for the building, and made available to the enforcement agency for all applicable inspections, and I will take the necessary steps to accomplish this requirement.
6. I understand that a registered copy of this Certificate of Compliance is required to be included with the documentation the builder provides to the building owner at occupancy, and I will take the necessary steps to accomplish these requirements.

Responsible Designer Name:	Responsible Designer Signature:	
Company: F L E W E L L I N G & M O O D Y Architects		
Address: 815 Colorado Blvd. Suite 200	Date Signed:	
City/State/Zip: Los Angeles, CA 90041	License #:	
Phone: 323.543.8300	Title:	Scope:
Responsible Designer Name: Sunil Patel	Responsible Designer Signature:	
Company: Budlong & Associates		
Address: 700 N. Central Ave Suitte 520	Date Signed: 2025-04-30	
City/State/Zip: Glendale, CA 91203	License #: 29448	
Phone: (818) 638-8780	Title: Mechanical Engineer	Scope:

CERTIFICATE OF COMPLIANCE - NONRESIDENTIAL PERFORMANCE COMPLIANCE METHOD	NRCC-PRF-E
Nonresidential Performance Compliance Method	(Page 20 of 22)

Building Level Controls

01	02
Mandatory Demand Response 110.12(c)	Shut-Off Controls 130.1(c) & 160.5(b)4C
Required	Required

Area Level Controls (includes all lighting controls installed in conditioned space to meet mandatory requirements per 130.1)

03	04	05	06	07	08	09
Area Description	Area Category Primary Function Area	Area Controls 130.1(a) & 160.5(b)4A	Multi-Level Controls 130.1(b) & 160.5(b)4B	Shut-Off Controls 130.1(c) & 160.5(b)4C	Primary Daylighting 130.1(d) & 160.5(b)4D	Secondary Daylighting 140.5(d) & 160.5(b)4D
Whole Building	All Other Space Types	Required	Required	Required	Required	Required

L. DECLARATION OF REQUIRED CERTIFICATES OF INSTALLATION

Selections made by Documentation Author indicate which Certificates of Installation must be submitted for the features to be recognized for compliance. These documents must be retained and provided to the building inspector during construction and can be found online

Building Component	Form/Title
Envelope	NRCI-ENV-01-E - Must be submitted for all buildings
Envelope	NRCI-ENV-E - Envelope (for all buildings)
Mechanical	NRCI-MCH-01-E - Must be submitted for all buildings
Mechanical	NRCI-MCH-E - For all buildings with Mechanical Systems
Plumbing	NRCI-PLB-01-E - Must be submitted for all buildings
Plumbing	NRCI-PLB-E - For all buildings with Plumbing Systems
	NRCI-SAB-E - Solar Water Heating, PV and Battery Storage Systems
Indoor Lighting	NRCI-LTI-01-E - Must be submitted for all buildings
Indoor Lighting	NRCI-LTI-E - Indoor Lighting (for all buildings)

M. DECLARATION OF REQUIRED CERTIFICATES OF ACCEPTANCE

Selections made by Documentation Author indicate which Certificates of Acceptance must be submitted for the features to be recognized for compliance. These documents must be provided to the building inspector during construction and must be completed through an Acceptance Test Technician Certification Provider (ATTCP).

Building Component	Form/Title & System Name(s)
Envelope	NRCA-ENV-02-F - NRFC label verification for fenestration
Indoor Lighting	NRCA-LTI-02-A - Occupancy Sensors and Automatic Time Switch Controls.

CERTIFICATE OF COMPLIANCE - NONRESIDENTIAL PERFORMANCE COMPLIANCE METHOD	NRCC-PRF-E
Nonresidential Performance Compliance Method	(Page 21 of 22)

M. DECLARATION OF REQUIRED CERTIFICATES OF ACCEPTANCE

Selections made by Documentation Author indicate which Certificates of Acceptance must be submitted for the features to be recognized for compliance. These documents must be provided to the building inspector during construction and must be completed through an Acceptance Test Technician Certification Provider (ATTCP).

Building Component	Form/Title & System Name(s)
Indoor Lighting	NRCA-LTI-03-A - Automatic Daylight Controls.
Mechanical	NRCA-MCH-02-A - Outdoor Air must be submitted for all newly installed HVAC units. Note: MCH-02-A can be performed in conjunction with MCH-07-A Supply Fan VFD Acceptance (if applicable) since testing activities overlap
	FCU-7/HP-1 Kitchen Servi, FCU-8/HP-2 MDF # 107, DOAS Womens /Mens Locke and FCU-9/HP-3 Electrical Roo., Fire Sprinkler Riser Room
Mechanical	NRCA-MCH-03-A - Constant Volume Single Zone HVAC
	FCU-7/HP-1 Kitchen Servi, FCU-8/HP-2 MDF # 107, DOAS Womens /Mens Locke and FCU-9/HP-3 Electrical Roo., Fire Sprinkler Riser Room
Mechanical	NRCA-MCH-05-A - Air Economizer Controls
	FCU-7/HP-1 Kitchen Servi

N. DECLARATION OF REQUIRED CERTIFICATES OF VERIFICATION

Selections made by Documentation Author indicate which Certificates of Verification must be submitted for the features to be recognized for compliance. These documents must be retained and provided to the building inspector during construction and can be found online

There are no Certificates of Verification applicable to this project

AGENCY

REVIEWED FOR CODE COMPLIANCE BY: WILLDAN ENGINEERING

Approval of these plans & specifications shall not be construed to be a permit for, or an approval of any violation of any Federal, State, County or City laws or ordinances. One set of approved plans must be kept on the job until completion.

9:27:31 AM Jul 21, 2025

FLEWELLING & MOODY
architecture planning interiors

HEADQUARTERS OFFICE:
99 S. Lake Avenue, Suite 300
Pasadena, CA 91101
Phone: 323.543.8300
E-Mail: fm-pasadena@flewelling-moody.com

ANTELOPE VALLEY OFFICE:
1035 West Lancaster Boulevard
Lancaster, California 93534
Phone: 661.949.0771
E-Mail: fm-lancaster@flewelling-moody.com

An Employee Owned Corporation

ARCHITECT

CONSULTANT

Budlong
An MBE|SBE|DBE|LSBE Firm
Glendale|Downtown LA|Fremont|Camarillo
W W W . B U D L O N G . C O M
Job No. 23-140

REGISTERED PROFESSIONAL ENGINEER SUNIL PATEL No. 29448 EXP. 06-30-25 MECHANICAL STATE OF CALIFORNIA

Drawn by: Author
Check by: Checker

Revisions

No.	Date	Description
	01/26/24	100% DD
	03/01/24	50% CD
	05/09/24	90% CD
	08/05/24	100% CD
	11/25/24	100% CD V2
	01/31/25	100% CD V3

All dimensions must be checked at the job by the contractor who accepts full responsibility for their accuracy under the contract. These plans & the specifications in connection therewith have been prepared for a specific site. Any and all responsibility for their use in whole or in part on any other site is hereby disclaimed by Flewelling & Moody.

CITY OF RIDGECREST

SGT. JOHN PINNEY MEMORIAL POOL REPLACEMENT

205 S WARNER ST, RIDGECREST, CA 93555

Drawing Title

MECHANICAL T-24 FORMS

Job No. 3055-0100
Date 08/07/2024
Sheet No. **M7.03**

CERTIFICATE OF COMPLIANCE - NONRESIDENTIAL PERFORMANCE COMPLIANCE METHOD — **NRCC-PRF-E**

Nonresidential Performance Compliance Method — **(Page 19 of 22)**

K1. INDOOR CONDITIONED LIGHTING GENERAL INFO

01	02	03	04	05	06
Occupancy Type[1]	Conditioned Floor Area[2] (ft²)	Installed Lighting Power (Watts)	Lighting Control Credits (Watts)	Additional (Custom) Allowance	
				Area Category Footnotes (Watts)	Area Category Footnotes (Watts)
Electrical Mechanical Telephone Room	217	86.8	0	0	0
Kitchen/ Food Preparation	567.22	538.86	0	0	0
Locker/Dressing Room	1442.39	649.08	0	0	0
Lounge	1129.7	621.34	0	0	0
Office (250 square feet)	742.2	482.43	0	0	0
Building Totals:	**4098.51**	**2378.51**	**0**	**0**	**0**

[1]*See Table 140.6-C*
[2]*See NRCC-LTI--E for unconditioned spaces*
[3]*Lighting information for existing spaces modeled is not included in this table*

K4. INDOOR CONDITIONED LIGHTING MANDATORY LIGHTING CONTROL

Building Level Controls

01	02
Mandatory Demand Response 110.12(c)	**Shut-Off Controls 130.1(c) & 160.5(b)4C**
Required	**Required**

Area Level Controls (includes all lighting controls installed in conditioned space to meet mandatory requirements per 130.1)

03	04	05	06	07	08	09
Area Description	**Area Category Primary Function Area**	**Area Controls 130.1(a) & 160.5(b)4A**	**Multi-Level Controls 130.1(b) & 160.5(b)4B**	**Shut-Off Controls 130.1(c) & 160.5(b)4C**	**Primary Daylighting 130.1(d) & 160.5(b)4D**	**Secondary Daylighting 140.5(d) & 160.5(b)4D**
Whole Building	All Other Space Types	Required	Required	Required	Required	Required

CERTIFICATE OF COMPLIANCE - NONRESIDENTIAL PERFORMANCE COMPLIANCE METHOD — **NRCC-PRF-E**

Nonresidential Performance Compliance Method — **(Page 20 of 22)**

L. DECLARATION OF REQUIRED CERTIFICATES OF INSTALLATION

Selections made by Documentation Author indicate which Certificates of Installation must be submitted for the features to be recognized for compliance. These documents must be retained and provided to the building inspector during construction and can be found online

Building Component	Form/Title
Envelope	NRCI-ENV-01-E - Must be submitted for all buildings
Envelope	NRCI-ENV-E - Envelope (for all buildings)
Mechanical	NRCI-MCH-01-E - Must be submitted for all buildings
Mechanical	NRCI-MCH-E - For all buildings with Mechanical Systems
Plumbing	NRCI-PLB-01-E - Must be submitted for all buildings
Plumbing	NRCI-PLB-E - For all buildings with Plumbing Systems
	NRCI-SAB-E - Solar Water Heating, PV and Battery Storage Systems
Indoor Lighting	NRCI-LTI-01-E - Must be submitted for all buildings
Indoor Lighting	NRCI-LTI-E - Indoor Lighting (for all buildings)

M. DECLARATION OF REQUIRED CERTIFICATES OF ACCEPTANCE

Selections made by Documentation Author indicate which Certificates of Acceptance must be submitted for the features to be recognized for compliance. These documents must be provided to the building inspector during construction and must be completed through an Acceptance Test Technician Certification Provider (ATTCP).

Building Component	Form/Title & System Name(s)
Envelope	NRCA-ENV-02-F - NRFC label verification for fenestration
Indoor Lighting	NRCA-LTI-02-A - Occupancy Sensors and Automatic Time Switch Controls.
Indoor Lighting	NRCA-LTI-03-A - Automatic Daylight Controls.
Mechanical	NRCA-MCH-02-A - Outdoor Air must be submitted for all newly installed HVAC units. Note: MCH-02-A can be performed in conjunction with MCH-07-A Supply Fan VFD Acceptance (if applicable) since testing activities overlap
	FCU-7/HP-1 Kitchen Servi, FCU-8/HP-2 MDF # 107, DOAS Womens /Mens Locke and FCU-9/HP-3 Electrical Roo., Fire Sprinkler Riser Room
Mechanical	NRCA-MCH-03-A - Constant Volume Single Zone HVAC
	FCU-7/HP-1 Kitchen Servi, FCU-8/HP-2 MDF # 107, DOAS Womens /Mens Locke and FCU-9/HP-3 Electrical Roo., Fire Sprinkler Riser Room
Mechanical	NRCA-MCH-05-A - Air Economizer Controls
	FCU-7/HP-1 Kitchen Servi

CA Building Energy Efficiency Standards - 2022 Nonresidential Compliance Report Version: 2022.0.000 Schema Version: rev 20220601 Report Generated: 2025-06-09 19:10:40 Compliance ID: EnergyPro-5468-0625-0567

CERTIFICATE OF COMPLIANCE - NONRESIDENTIAL PERFORMANCE COMPLIANCE METHOD — **NRCC-PRF-E**

Nonresidential Performance Compliance Method — **(Page 21 of 22)**

N. DECLARATION OF REQUIRED CERTIFICATES OF VERIFICATION

Selections made by Documentation Author indicate which Certificates of Verification must be submitted for the features to be recognized for compliance. These documents must be retained and provided to the building inspector during construction and can be found online

There are no Certificates of Verification applicable to this project

CA Building Energy Efficiency Standards - 2022 Nonresidential Compliance Report Version: 2022.0.000 Schema Version: rev 20220601 Report Generated: 2025-06-09 19:10:40 Compliance ID: EnergyPro-5468-0625-0567

CERTIFICATE OF COMPLIANCE - NONRESIDENTIAL PERFORMANCE COMPLIANCE METHOD — **NRCC-PRF-E**

Nonresidential Performance Compliance Method — **(Page 22 of 22)**

Documentation Author's Declaration Statement

1. I certify that this Certificate of Compliance documentation is accurate and complete.

Documentation Author Name: Saeid Hashemi	Documentation Author Signature:
Company: Budlong & Associates	Signature Date: 2025-06-10
Address: 700 N. Central Ave. Suite 520	CEA/HERS Certification Identification (if applicable):
City/State/Zip: Glendale, CA 91203	Phone: (818) 638-8780

Responsible Person's Declaration statement

I certify the following under penalty of perjury, under the laws of the State of California:

1. The information provided on this Certificate of Compliance is true and correct.
2. I am eligible under Division 3 of the Business and Professions Code to accept responsibility for the building design or system design identified on this Certificate of Compliance (responsible designer)
3. The energy features and performance specifications, materials, components, and manufactured devices for the building design or system design identified on this Certificate of Compliance conform to the requirements of Title 24, Part 1 and Part 6 of the California Code of Regulations.
4. The building design features or system design features identified on this Certificate of Compliance are consistent with the information provided on other applicable compliance documents, worksheets, calculations, plans and specifications submitted to the enforcement agency for approval with this building permit application.
5. I understand that a registered copy of this Certificate of Compliance shall be made available with the building permit(s) issued for the building, and made available to the enforcement agency for all applicable inspections, and I will take the necessary steps to accomplish this requirement.
6. I understand that a registered copy of this Certificate of Compliance is required to be included with the documentation the builder provides to the building owner at occupancy, and I will take the necessary steps to accomplish these requirements.

Responsible Designer Name:	Responsible Designer Signature:	
Company: F L E W E L L I N G & M O O D Y Architects		
Address: 815 Colorado Blvd. Suite 200	Date Signed:	
City/State/Zip: Los Angeles, CA 90041	License #:	
Phone: 323.543.8300	Title:	Scope:
Responsible Designer Name: Sunil Patel	Responsible Designer Signature:	
Company: Budlong & Associates		
Address: 700 N. Central Ave Suitte 520	Date Signed: 2025-06-10	
City/State/Zip: Glendale, CA 91203	License #: 29448	
Phone: (818) 638-8780	Title: Mechanical Engineer	Scope:

CA Building Energy Efficiency Standards - 2022 Nonresidential Compliance Report Version: 2022.0.000 Schema Version: rev 20220601 Report Generated: 2025-06-09 19:10:40 Compliance ID: EnergyPro-5468-0625-0567

AGENCY

FLEWELLING & MOODY
architecture planning interiors

HEADQUARTERS OFFICE:
99 S. Lake Avenue, Suite 300
Pasadena, CA 91101
Phone: 323.543.8300
E-Mail: fm-pasadena@flewelling-moody.com

ANTELOPE VALLEY OFFICE:
1035 West Lancaster Bouldvard
Lancaster, California 93534
Phone: 661.949.0771
E-Mail: fm-lancaster@flewelling-moody.com

An Employee Owned Corporation

ARCHITECT

CONSULTANT

Budlong
An MBE|SBE|DBE|LSBE Firm
Glendale|Downtown LA|Fremont|Camarillo
W W W . B U D L O N G . C O M
Job No. 23-140

REGISTERED PROFESSIONAL ENGINEER
SUNIL PATEL
No. 29448
EXP. 06-30-25
MECHANICAL
STATE OF CALIFORNIA

Drawn by: Author

Check by: Checker

Revisions

No.	Date	Description
	01/26/24	100% DD
	03/01/24	50% CD
	05/09/24	90% CD
	08/05/24	100% CD
	11/25/24	100% CD V2
	01/31/25	100% CD V3
1	08/27/2025	BID ALTERNATE

All dimensions must be checked at the job by the contractor who accepts full responsibility for their accuracy under the contract. These plans & the specifications in connection therewith have been prepared for a specific site. Any and all responsibility for their use in whole or in part on any other site is hereby disclaimed by Flewelling & Moody.

CITY OF RIDGECREST

SGT. JOHN PINNEY MEMORIAL POOL REPLACEMENT

205 S WARNER ST, RIDGECREST, CA 93555

Drawing Title

MECHANICAL T-24 FORMS

Job No. 3055-0000

Sheet No. M7.03A6

Date 08/07/2024

APPLICABLE CODES

1. 2022 BUILDING STANDARDS ADMINISTRATIVE CODE, PART 1, TITLE 24 C.C.R.
2. 2022 CALIFORNIA BUILDING CODE (CBC), PART 2, TITLE 24 C.C.R.
3. 2022 CALIFORNIA ELECTRICAL CODE (CEC), PART 3, TITLE 24 C.C.R.
4. 2022 CALIFORNIA ENERGY CODE (CEC), PART 6 TITLE 24 C.C.R.
5. 2022 CALIFORNIA FIRE CODE, PART 9, TITLE 24 C.C.R
6. 2022 CALIFORNIA REFERENCED STANDARDS, PART 12, TITLE 24 C.C.R. TITLE 19 C.C.R.
7. PUBLIC SAFETY, STATE FIRE MARSHAL REGULATIONS

STANDARD ABBREVIATIONS

A OR AMP	AMPERES
A/C	ASPHALT CONCRETE
AFF	ABOVE FINISH FLOOR
BKR.	BREAKER
BC	BARE COPPER
C	CONDUIT
CKT.	CIRCUIT
C.O.	CONDUIT ONLY
(E)	EXISTING
(ER)	EXISTING , RELOCATED
EV	ELECTRIC VEHICLE
F.O.	FIBER OPTIC
G.F.C.I.	GROUND FAULT CURRENT INTERRUPTER
J.BOX	JUNCTION BOX
IDF	INTERMEDIATE DISTRIBUTION FRAME (COMPUTER/NETWORKING SYSTEM)
LDF	LOCAL DISTRIBUTION FRAME (COMPUTER/NETWORKING SYSTEM)
MDF	MAIN DISTRIBUTION FRAME (COMPUTER/NETWORKING SYSTEM)
M.H.	MOUNTING HEIGHT
(N)	NEW
N.I.C.	NOT IN CONTRACT
PA	PUBLIC ADDRESS
PH OR Ø	PHASE
(RR)	REMOVE AND RELOCATE
(R)	REMOVED
REV.	REVISED
RSP	REMOTE SECURITY PANEL
SLC	SIGNALING LINE CIRCUIT
SW.	SWITCH
XFMR	TRANSFORMER
TVSS	TRANSIENT VOLTAGE SURGE SUPPRESSER
TYP.	TYPICAL
UFER	UFER GROUND
UG	UNDERGROUND
UGC	UNDERGROUND CONDUIT
U.O.N	UNLESS OTHERWISE NOTED
WM	WIREMOLD
WP	WEATHERPROOF
W.P.	WEST PENN
WL	WET LISTED
V.L.	VERIFY LOCATION
EQ	EQUIPMENT

EV CHARGING (2022 CGBSC 5.106.5.3)

TOTAL NO. OF PARKING SPACE = 70
NUMBER OF REQUIRED EV CAPABLE SPACES = 13
NUMBER OF REQUIRED SPACES WITH EV CHARGERS = 3
PARKING SPACES WITH REQUIRED EV CHARGERS SHALL BE COUNTED TOWARDS EV CAPABLE SPACES THUS,
NET REQUIRED EV CAPABLE SPACES = 10
NET REQUIRED EV CHARGING SPACES = 3

SCOPE OF WORK

1. PV SYSTEM, FIRE ALARM SYSTEM AND LOW VOLTAGE SYSTEMS ARE NOT IN CURRENT DESIGN SCOPE OF WORK AND SHALL BE PROVIDED BY OTHERS.
2. ELECTRICAL POWER AND LIGHTING SYSTEM DESIGN
3. PROVIDE NEW ELECTRICAL SERVICE
4. ELECTRICAL POWER AND LIGHTING TITLE-24 CALCS
5. ELECTRICAL EMERGENCY LIGHTING PHOTOMETRICS
6. SITE POWER AND LIGHTING DESIGN
7. DEMOLITION WORK IS NOT IN SCOPE

GENERAL NOTES

1. CONSULT WITH THE OWNER AUTHORIZED REPRESENTATIVE (OAR)PRIOR STARTING WORK.
2. THE CONTRACTOR SHALL USE SUFFICIENT BARRICADES AND TEMPORARY PROTECTION DEVICES TO PREVENT PEDESTRIANS OR NON-AUTHORIZED PERSONNEL ACCESS TO ANY OPEN TRENCHES OR CONSTRUCTION ACTIVITY. THE CONTRACTOR SHALL ERECT A SAFETY BARRICADE AT ALL OPEN TRENCHES, DITCHES, PITS, SUMPS, ETC FOR THE PROTECTION AND SAFETY OF THE PUBLIC. ALL TRENCHES OUTSIDE OF THE BARRICADE LIMITS SHALL BE BACKFILLED AND PAVED NOT LATER THAN 72 HOURS AFTER BEING OPENED. DURING THE TIME THE TRENCHES ARE OPEN IN TRAFFIC AREAS, THE CONTRACTOR SHALL PROVIDE TRAFFIC PLATES. SAFETY BARRICADES SHALL BE PANELIZED CHAIN LINK FENCE. EACH FENCE PANEL SHALL BE 6FT TALL X 10FT WIDE WITH STAND AND TIED TOGETHER END TO END WITH A MINIMUM 8-GAUGE WIRE. NO TRENCHES SHALL BE LOCATED OUTSIDE BARRICADES.
3. THE REPRESENTATION OF PHYSICAL PLACEMENT OF EXISTING UNDERGROUND CONDUITS HAS BEEN DEVELOPED FROM THE BEST INFORMATION AVAILABLE TO THE OWNER AT THE TIME THE DRAWINGS WERE PREPARED. THE OWNER PROVIDES THIS ONLY AS A GENERAL GUIDELINE FOR THE CONVENIENCE OF BIDDERS/CONTRACTORS AND DOES NOT PROVIDE A GUARANTEE OR WARRANTY IN NY WAY EXPRESS OR IMPLIED, AS TO THE ACCURACY OF THESE REPRESENTATIONS. NOTHING IN THIS DISCLAIMER AFFECTS IN ANY WAY THE DUTY OF THE CONTRACTOR TO FURNISH ACCURATE "AS BUILT" DRAWINGS AFTER THE COMPLETION OF THE CONTRACT.
4. ALL FEEDERS AND BRANCH CIRCUITS SHALL CARRY A GROUND WIRE, SIZED AS PER N.E.C. ARTICLE 250.
5. REFER TO THE PLANS FOR ADDITIONAL REQUIREMENTS AND EQUIPMENT AND MATERIAL APPROVED FOR USE UNDER THIS CONTRACT.
6. PRIOR TO PULLING ANY CONDUCTORS, CLEAN AND MANDREL ALL CONDUITS.
7. CONTRACTOR SHALL INSTALL EQUIPMENT PER ADA (AMERICAN DISABILITIES ACT) REQUIREMENTS.
8. EXTERIOR EQUIPMENT, JUNCTION BOXES, ENCLOSURES AND CONNECTIONS SHALL BE WEATHERPROOF TYPE SUITABLE FOR EXTERIOR INSTALLATION.(MALLEABLE IRON FITTINGS).
9. IN THE EVENT THAT CERTAIN FEATURES OF THE CONSTRUCTION ARE NOT FULLY SHOWN ON THE CONSTRUCTION DOCUMENTS, THE FEATURES SHALL BE OF THE SAME CHARACTER AS SIMILAR CONDITIONS THAT ARE SHOWN.
10. ALL DIMENSIONS, ELEVATIONS AND EXISTING CONDUITS SHALL BE ON THE SITE BY GENERAL CONTRACTOR, AND EACH SUB-CONTRACTOR BEFORE THE WORK BEGINS. ALL DISCREPANCIES SHALL BE BROUGHT TO THE OAR'S ATTENTION BEFORE CONSTRUCTION BEGINS.
11. THE ENGINEER HAS PREPARED THESE DOCUMENTS ONLY FOR IMPROVEMENTS SPECIFIED, DETAILED OR SHOWN AS NEW WORK, AND ASSUMES NO RESPONSIBILITY FOR OTHER CONSTRUCTION.
MATERIAL OR EQUIPMENT NOTED AS "PROVIDED BY OTHERS".
12. DEMOLITION AND/OR REMOVAL OF ELECTRICAL EQUIPMENT SHALL BE THE RESPONSIBILITY OF THE ELECTRICAL CONTRACTOR. ALL REMOVED EQUIPMENT NOT TO BE REUSED SHALL BE RETURNED TO OWNER OR AS DIRECTED BY THE OWNER INSPECTOR.
13. ALL JUNCTION BOX COVER PLATES FOR BRANCH CIRCUIT SYSTEM SHALL BE CLEARLY MARKED WITH PERMANENT INK FELT PEN IDENTIFYING THE BRANCH CIRCUIT (BOTH PANEL NUMBER AND CIRCUIT NUMBER) CONTAINED IN THE BOX.
14. THE CONTRACTOR SHALL MAINTAIN THE UNIFORMITY AND CONTINUITY OF THE GROUNDING SYSTEM IN ALL CONDUITS/RACEWAYS.
15. TEST THE ENTIRE SYSTEM TO DEMONSTRATE TO THE OAR THAT THE ELECTRICAL COMPONENTS AND SPECIAL SYSTEMS ARE COMPLETE AND FUNCTION PROPERLY. MAKE NECESSARY CORRECTIONS AND LEAVE SYSTEMS READY FOR OPERATION.
16. DRAWINGS ARE ESSENTIALLY DIAGRAMMATIC AND THE SIZE AND LOCATION OF EQUIPMENT IS INDICATED TO SCALE WHENEVER POSSIBLE. COORDINATE LOCATION AND LAYOUT WITH OTHER WORK. CONTRACTOR SHALL PROVIDE TO THE ENGINEER A 1/4"=1'-0" OF SCALED DRAWING OF ELECTRICAL EQUIPMENT ROOMS SHOWING LOCATION AND CLEARANCES OF SUBMITTED EQUIPMENT FOR REVIEW AND APPROVAL PRIOR TO ORDERING OF ELECTRICAL EQUIPMENT.
17. PROVIDE HANGERS, SUPPORTS, SEISMIC RESTRAINTS AND/ OR BRACING FOR ALL EQUIPMENT, CONDUIT, AND LIGHTING FIXTURES TO SUSTAIN VERTICAL LOADS AND RESIST HORIZONTAL FORCES IN ANY DIRECTION TO COMPLY WITH 2016 EDITION OF TITLE 24, PART 2, CALIFORNIA BUILDING CODE, CHAPTER 16, TABLE 16A AND ASSOCIATED NOTES.
18. PER CEC 300-21, "OPENINGS AROUND ELECTRICAL PENETRATIONS THROUGH FIRE-RESISTANT-RATED WALLS, PARTITIONS, FLOORS, CEILINGS SHALL BE FIRESTOPPED USING APPROVED METHODS TO MAINTAIN THE FIRE RESISTANCE RATING."
19. ALL CONDUCTORS FOR FEEDERS AND BRANCH CIRCUITS SHALL BE COPPER, TYPE THWN/THHN, RATED FOR 75°C. SIZES #12 AWG MAY BE SOLID OR STRANDED, #10 AND LARGER SHALL BE STRANDED. PROVIDE 75°C RATED AND APPROVED TERMINATION FOR ALL CONDUCTORS.
20. ALL ELECTRICAL WORK SHALL BE PER THE APPLICABLE CEC CODE. CONTRACTOR SHALL INCLUDE IN HIS BID ALL REQUIRED LABOR, MATERIAL EXPERTISE, AND QUALIFIED PERSONNEL TO COMPLETELY INSTALL IN A CODE-COMPLIANT MANNER, ALL WORK SHOWN ON THE PLANS.
21. WHEN THERE ARE DISCREPANCIES BETWEEN CONTRACT DOCUMENTS (DRAWINGS), OBTAIN CLARIFICATION FROM THE ENGINEER PRIOR TO BID. FOR BIDDING PURPOSES THE MORE STRINGENT OR MORE EXPENSIVE REQUIREMENT(S) SHALL APPLY.
22. DURING CONSTRUCTION, THE CONTRACTOR SHALL MAINTAIN A DAILY RECORD OF ALL DEVIATIONS FROM THE BID DRAWINGS. ALL DIMENSIONS AND OTHER INFORMATION NECESSARY TO COMPLETELY EXPLAIN AND LOCATE ALL ELEMENTS OF THESE DEVIATIONS SHALL BE RECORDED. UPON COMPLETION OF WORK, THE CONTRACTOR SHALL SUBMIT TO THE OWNER, ONE COMPLETE SET OF REPRODUCIBLE DRAWINGS CORRECTED TO REFLECT "AS-BUILT" CONDITIONS OF THE WORK.
23. ANY SUBMITTALS FOR EQUIPMENT DIFFERENT FROM THE SPECIFIED ITEMS SHOWN ON THE PLANS SHALL BE ACCOMPANIED BY CUT SHEETS FOR THE ORIGINAL SPECIFIED ITEM(S). SUBMITTALS WITHOUT THE SPECIFIED CUT SHEETS WILL BE REJECTED AS INCOMPLETE.
"PROVIDE" SHALL BE DEFINED AS: FURNISH AND INSTALL.
24. ALL MATERIALS, EQUIPMENT, CONDUIT AND WIRING SHALL BE NEW AND PROVIDED BY THE CONTRACTOR. REFER TO THE PLANS FOR ADDITIONAL REQUIREMENTS FOR EQUIPMENT AND MATERIAL APPROVED FOR USE UNDER THIS CONTRACT.
25. ALL DIMENSIONS AND ELEVATIONS SHALL BE CHECKED AND VERIFIED ON THE SITE BY THE GENERAL CONTRACTOR AND EACH SUBCONTRACTOR BEFORE THE WORK BEGINS. ALL PERCEIVED ERRORS, OMISSIONS, AND DISCREPANCIES SHALL BE BROUGHT TO THE ENGINEER'S ATTENTION BEFORE CONSTRUCTION BEGINS.
26. PROVIDE ELECTRICAL PANELS WITH TYPEWRITTEN "AS-BUILT" PANEL SCHEDULE. PANEL SCHEDULE SHALL INCLUDE LOCATION, QUANTITY AND TYPE OF DEVICES SERVED. PANEL SCHEDULE SHALL BE REVISED AS REQUIRED TO REFLECT REMOVED OR DEMOLISHED CIRCUITS.
27. THE SEISMIC ANCHORAGE OF ELECTRICAL EQUIPMENT SHALL CONFORM TO C.C.R. 2007 CHAPTER 16 AND ASCE 7-05 CHAPTER 13.
28. CONTRACTOR SHALL SUBMIT A CALCULATIONS AND DETAILS FOR APPROVAL WHEN USING AN INSTALLATION METHOD NOT COVERED UNDER ANY OF THE STRUCTURAL DRAWINGS STANDARD DETAILS.
29. ALL WORK SHALL BE DONE IN ACCORDANCE WITH LATEST APPLICABLE CODES AND REGULATIONS PER CALIFORNIA AND OTHER AUTHORITIES HAVING JURISDICTION.
30. ALL MATERIALS, EQUIPMENT, CONDUIT AND WIRING SHALL BE NEW AND PROVIDED BY THE CONTRACTOR. REFER TO THE SPECIFICATIONS FOR ADDITIONAL REQUIREMENTS FOR EQUIPMENT AND MATERIAL APPROVED FOR USE UNDER THIS CONTRACT.
31. WIRING FOR ALL LOW VOLTAGE SYSTEMS SHALL BE ENCLOSED IN CONDUIT AND/OR RACEWAY.
32. ALL DIMENSIONS AND ELEVATIONS SHALL BE CHECKED AND VERIFIED ON THE SITE BY THE GENERAL CONTRACTOR AND EACH SUBCONTRACTOR BEFORE THE WORK BEGINS. ALL PERCEIVED ERRORS, OMISSIONS AND DISCREPANCIES SHALL BE BROUGHT TO THE ENGINEER'S ATTENTION BEFORE CONSTRUCTION BEGINS.
33. ALL RACEWAYS INSIDE OF BUILDING SHALL BE CONCEALED. INCLUDE ALL REQUIRED DEMOLITION, CUTTING, PATCHING AND FINISH TO MATCH EXISTING INSTALLATION AS REQUIRED TO INSTALL NEW CONDUIT AND RACEWAYS IN EXISTING BUILDING.
34. ALL CONDUIT PENETRATIONS THROUGH FIRE-RATED FLOOR SLABS, SHAFTS, AND WALLS SHALL BE SEALED AGAINST THE SPREAD OF FIRE OR SMOKE WITH APPROVED CABLE & CONDUIT FIRE STOPS OR FIRE RESISTANT SEALANT TO GIVE THE EQUIVALENT FIRE RATING OF THE STRUCTURE BEFORE THE PENETRATION. ALL OTHER NON-RATED PENETRATIONS OF STRUCTURES SHALL BE SEALED.
35. EXPOSED CONDUITS ABOVE T-BAR CEILINGS SHALL BE INSTALLED PARALLEL TO OR AT RIGHT ANGLES TO EXISTING BEAMS OR WALLS. EXPOSED CONDUITS UP TO 7'-0" ABOVE FINISH FLOOR SHALL BE RIGID GALVANIZED STEEL AND ABOVE 7'-0" MAY BE EMT.
36. PROVIDE ELECTRICAL PANELS WITH TYPEWRITTEN "AS-BUILT" PANEL SCHEDULE. PANEL SCHEDULE SHALL INCLUDE LOCATION, QUANTITY, AND TYPE OF DEVICES SERVED.
37. PROVIDE ELECTRICAL PANELS WITH ENGRAVED NAMEPLATE ON OUTSIDE OF PANEL ABOVE DOOR OPENING.
38. SUPPORT CONDUIT 2-1/2 INCH TRADE SIZE OR SMALLER WITH U.L. LISTED CLAMPS AND HANGERS IN ACCORDANCE WITH SMACNA STANDARDS.
39. EQUIPMENT SPECIFIED ON THESE DRAWING ARE BASIS OF DESIGN.
40. CONTRACTOR SHALL ASSUME FULL RESPONSIBILITY FOR ALL ADDITIONAL DESIGN AND CONSTRUCTION COSTS INCURRED BY THE USE OF ANY PRODUCT OTHER THAN THE BASIS OF DESIGN.
41. PROVIDE BREAKERS TIES TO BREAKERS FEEDING MULTI-WIRE RUNS.
42. THESE PLANS ARE DIAGRAMMATIC, CONDUIT EXACT ROUTING, BOXES, FASTENERS, ETC. ARE CONSIDERED AS PART OF THE MEANS AND METHODS THAT THE CONTRACTOR IS USING TO PROVIDE AN OPERABLE AND APPROVED INSTALLATION.
43. ALL ELECTRICAL WORK SHALL BE DESIGNED PER 2017 LOS ANGELES COUNTY ELECTRICAL CODE, 2016 CALIFORNIA ELECTRICAL CODE, 2014 NATIONAL ELECTRICAL CODE, AND 2016 BUILDING ENERGY EFFICIENCY STANDARDS.
44. 110.2 APPROVAL: ALL ELECTRICAL EQUIPMENT SHALL BE LABELED, LISTED OR CERTIFIED BY A NATIONALLY RECOGNIZED TESTING LABORATORY ACCREDITED BY THE UNITED STATES OCCUPATIONAL SAFETY HEALTH ADMINISTRATION.
45. 130.5(c) VOLTAGE DROP: THE MAXIMUM COMBINED VOLTAGE DROP ON BOTH INSTALLED FEEDER CONDUCTORS AND BRANCH CIRCUIT CONDUCTORS TO THE FARTHEST CONNECTED LOAD OR OUTLET SHALL NOT EXCEED 5 PERCENT.
46. LUGS/TERMINALS SHALL BE RATED FOR COPPER AND ALUMINUM AS REQUIRED
47. PROVIDE PROTECTION FROM PHYSICAL DAMAGE FOR SWITCHBOARDS, PANEL BOARDS AND OTHER ELECTRICAL EQUIPMENT (110.27(B)).
48. CONTRACTOR TO PROVIDE CONDUIT SLEEVES AT THE TIME OF CONCRETE POUR FOR ALL CONDUITS PASSING THROUGH CONCRETE WALL OR FLOORS

ELECTRICAL SHEET INDEX

SHEET NUMBER	SHEET NAME
E0.01	ELECTRICAL FRONT SHEET
E0.02	ELECTRICAL SINGLE LINE DIAGRAM
E0.02A7	ELECTRICAL SINGLE LINE DIAGRAM ALT 7
E0.03	ELECTRICAL LIGHTING FIXTURE SCHEDULE
E0.03A3	ELECTRICAL LIGHTING FIXTURE SCHEDULE ALT3
E0.04	ELECTRICAL PANEL SCHEDULE
E0.04A3	ELECTRICAL PANEL SCHEDULE ALT 3
E0.04A6	ELECTRICAL PANEL SCHEDULE ALT 6
E0.04A7	ELECTRICAL PANEL SCHEDULE ALT 7
E1.01	ELECTRICAL SITE POWER PLAN
E1.01A	ELECTRICAL SITE UTILITY POWER PLAN
E1.01A6	ELECTRICAL SITE POWER PLAN ALT 6
E1.01A7	ELECTRICAL SITE POWER PLAN ALT 7
E1.01B	ELECTRICAL SCE PLANS
E1.02	ELECTRICAL SITE LIGHTING PLAN
E1.02A3	ELECTRICAL SITE LIGHTING PLAN ALT 3
E1.02A6	ELECTRICAL SITE LIGHTING PLAN ALT 6
E1.02A7	ELECTRICAL SITE LIGHTING PLAN ALT 7
E2.01	ELECTRICAL COMMUNITY BUILDING POWER FLOOR PLAN
E2.01A6	ELECTRICAL COMMUNITY BUILDING POWER FLOOR PLAN ALT 6
E2.02	ELECTRICAL EQUIPMENT STORAGE POWER FLOOR PLAN
E2.03	ELECTRICAL COMMUNITY BUILDING ROOF POWER PLAN
E2.03A6	ELECTRICAL COMMUNITY BUILDING ROOF POWER PLAN ALT 6
E2.04	ELECTRICAL EQUIPMENT STORAGE ROOF POWER PLAN
E2.05	ELECTRICAL COMMUNITY BUILDING LIGHTING PLAN
E2.05A6	ELECTRICAL COMMUNITY BUILDING LIGHTING PLAN ALT 6
E2.06	ELECTRICAL EQUIPMENT STORAGE LIGHTING PLAN
E2.07	ELECTRICAL LIGHTING CONTROL PLAN
E2.08	ELECTRICAL LIGHTING CONTROL DIAGRAMS
E3.01	ELECTRICAL SITE LIGHTING PHOTOMETRICS
E3.01A3	ELECTRICAL SITE LIGHTING PHOTOMETRIC ALT 3
E3.01A6	ELECTRICAL SITE LIGHTING PHOTOMETRICS ALT 6
E3.01A7	ELECTRICAL SITE LIGHTING PHOTOMETRICS ALT 7
E3.02	ELECTRICAL SITE EMERGENCY LIGHTING PHOTOMETRICS
E3.02A6	ELECTRICAL SITE EMERGENCY LIGHTING PHOTOMETRICS ALT 6
E3.02A7	ELECTRICAL SITE EMERGENCY LIGHTING PHOTOMETRICS ALT 7
E3.03	ELECTRICAL COMMUNITY BUILDING EMERGENCY PHOTOMETRICS

ELECTRICAL SHEET INDEX

SHEET NUMBER	SHEET NAME
E3.03A6	ELECTRICAL COMMUNITY BUILDING EMERGENCY PHOTOMETRICS ALT 6
E3.04	ELECTRICAL STORAGE BUILDING EMERGENCY PHOTOMETRICS
E6.01	ELECTRICAL DETAILS-1
E6.02	ELECTRICAL DETAILS-2
E7.01	ELECTRICAL T-24 FORMS - INDOOR (COMMUNITY BUILDING)
E7.01A6	ELECTRICAL T-24 FORMS - INDOOR (COMMUNITY BUILDING) ALT 6
E7.02	ELECTRICAL T-24 FORMS - OUTDOOR (COMMUNITY BUILDING)
E7.02A3	ELECTRICAL T-24 FORMS - OUTDOOR (COMMUNITY BUILDING) ALT 3
E7.02A6	ELECTRICAL T-24 FORMS - OUTDOOR (COMMUNITY BUILDING) ALT 6
E7.02A7	ELECTRICAL T-24 FORMS - OUTDOOR (COMMUNITY BUILDING) ALT 7
E7.03	ELECTRICAL T-24 FORMS - INDOOR (STORAGE BUILDING)
E7.04	ELECTRICAL T-24 FORMS - OUTDOOR (STORAGE BUILDING)
E7.05	ELECTRICAL T-24 FORMS - POWER DISTRIBUTION
E8.01	SPORTS LIGHTING DRAWINGS
E8.02	SPORTS LIGHTING DRAWINGS
E8.03	SPORTS LIGHTING DRAWINGS

ELECTRICAL SYMBOLS LIST

FIRE/SMOKE SYMBOLS LIST

- SD — SMOKE DETECTOR
- CO — CARBON MONOXIDE DETECTOR
- SD CO — SMOKE/CARBON MONOXIDE DETECTOR COMBO
- DSD — DUCT SMOKE DETECTOR
- FD — FIRE DAMPER

NOTE FOR RESIDENTIAL FIRE/SMOKE OUTLET:
PROVIDE TEMPER RESISTANT w/ARC FAULT CIRCUIT INTERRUPTOR IN ADDITION TO ABOVE REQUIREMENTS PER CEC 210.12 & 406.12

DATA/TELECOM SYMBOLS LIST

- DATA(LAN)OUTLET,(2)RJ-45 JACK, 2CAT6 CABLES, 3/4"C BACK TO IDF/MDF
- TELEPHONE OUTLET,(2)RJ-14 JACK, 2CAT6 CABLES, 3/4"C BACK TO IDF/MDF
- DATA+TELEPHONE OUTLET,RJ45+RJ14 JACKS, 3/4"C BACK TO IDF/MDF
- TV — TV(TELEVISION COAXIAL CABLE OUTLET) 'F' TYPE CONNECTOR, RG-6CABLE 3/4"C BACK IDF/MDF
- DATA+TV OUTLET,RJ45+F CONNECTORS, CAT6+RG-6 CABLE 3/4"C BACK TO IDF/MDF
- PHONE+TV OUTLET,RJ14+F CONNECTORS, CAT6+RG-6 CABLE 3/4"C BACK TO IDF/MDF
- DATA+PHONE+TV OUTLET,RJ45+RJ14+F CONNECTORS, 2 CAT6 +RG-6 CABLE 1"C BACK TO IDF/MDF

PROVIDE CONDUITS FOR LOW VOLTAGE SYSTEM AS PER BELOW REQUIREMENTS:

3/4"C-MAX 3 CAT6	2.5"C-MAX 38 CAT6
1"C-MAX 6 CAT6	3"C-MAX 55 CAT6
1/4"C-MAX 9 CAT6	3.5"C-MAX 75 CAT6
1/2"C-MAX 14 CAT6	4"C-MAX 98 CAT6
2"C-MAX 24 CAT6	

ELECTRICAL SCOPE RELATED TO LV: ELECTRICAL DRAWINGS ONLY INDICATE DATA OUTLETS AND CONDUIT REQUIRMENTS. ALL HEAD END EQ, CABLING , IDF, MDF RACKS ETC SHALL BE BY OTHERS

ELECTRICAL EQ. SYMBOLS LIST

- FLUSH MOUNTED/ WALL RECESSED PANELBOARD
- SURFACE MOUNTED PANELBOARD
- FLUSH MOUNTED/WALL RECESSED LIGHTING CONTROL PANEL, SPECS PER PLANS
- FREESTANDING SWITCHBOARD, PROVIDE A MIN. 2" HOUSEKEEPING PAD
- T — PAD MOUNTED TRANSFORMER, SPECS PER PLAN
- PB — UNDERGROUND PULLBOX, EXTERIOR NEMA-3R
- WP J — WALL MOUNTED WEATHERPROOF J-BOX, EXTERIOR NEMA-3R
- J — WALL MOUNTED J-BOX, INTERIOR NEMA-1
- J — CEILING MOUNTED J-BOX, INTERIOR NEMA-1

SINGLE LINE DIAGRAM SYMBOLS

- CIRCUIT BREAKER, NO OF POLES, SIZE PER PLANS
- GFP — CIRCUIT BREAKER WITH GROUND FAULT RELAY
- ST — CIRCUIT BREAKER WITH SHUNT TRIP
- ERM — CIRCUIT BREAKER WITH ENERGY REDUCTION MAINTENANCE
- NON-FUSED/FUSED DISCONNECT SWITCH, 'AF' INDICATES FUSE AMPS,'AS' INDICATES SWITCH AMPS
- M — DEMAND TYPE KWH METER
- CT M — CT METER
- HP FLA — TYPICAL MOTOR SYMBOL
- UFER GROUND
- LANDING LUGS
- PANEL HA 120/208V 3PH,4W — ELECTRICAL PANEL INDICATING VOLTS, PHASE & FAULT CURRENT

POWER SYMBOLS LIST

- 120VAC, 20AMP DUPLEX/QUADPLEX RECEPTACLE OUTLET
- 120VAC, 20AMP DUPLEX/QUADPLEX RECEPTACLE OUTLET w/GROUND FAULT INTERRUPTER
- 120VAC, 20AMP DUPLEX/QUADPLEX SPLIT WIRED CONTROLLED RECEPTACLE. BOTTOM RECEPTACLE IS TO BE SWITCH CONTROLLED, USE GRAY COLORED RECEPTACLE TO INDICATE SWITCHED RECEPTACLE
- SPECIAL 208/240VAC DUPLEX/QUADPLEX RECEPTACLE PROVIDED FOR DEDICATED CIRCUITS. NEMA PLUG TYPE SHALL BE PER EQUIPMENT MANUFACTURER REQUIREMENTS
- +XX" +XX" — 120VAC, 20AMP DUPLEX/QUADPLEX RECEPTACLE OUTLET MOUNTED AT A HEIGHT, +XX" INDICATES MOUNTING HEIGHT
- WP WP — 120VAC, 20AMP DUPLEX/QUADPLEX RECEPTACLE OUTLET WITH WEATHERPROOF COVER. WEATHERPROOF COVER TO COMPLY WITH CEC 460.9 DAMP AND WET LOCATION REQUIREMENTS
- 120VAC, 20AMP DUPLEX CEILING MOUNTED RECEPTACLE OUTLET
- 120VAC, 20AMP DUPLEX FLOOR MOUNTED RECEPTACLE OUTLET

NOTES:
1. PROVIDE TEMPER RESISTANT RECEPTACLES & ARC FAULT CIRCUIT INTERRUPTOR IN ADDITION TO ABOVE REQUIREMENTS PER CEC 210.12 & 406.12 FOR RESIDENTIAL DWELLING UNITS
2. ALL WALL RECEPTACLES ARE MOUNTED AT +18"AFF U.O.N

SWITCHING SYMBOLS

S	MANUAL ON-OFF TOGGLE SWITCH
S_3	MANUAL ON-OFF 3-WAY SWITCH
S_D	DIMMER SWITCH w/MANUAL OVERRIDE
S_{3D}	3-WAY DIMMER SWITCH w/MANUAL OVERRIDE
S_{OS}	OCCUPANCY SENSOR SWITCH w/MANUAL OVERRIDE
S_{3OS}	3-WAY OCCUPANCY SENSOR SWITCH w/MANUAL OVERRIDE
S_{OD}	OCCUPANCY SENSOR+DIMMER SWITCH w/MANUAL OVERRIDE
S_V	VACANCY SENSOR SWITCH w/MANUAL OVERRIDE
S_{3V}	3-WAY VACANCY SWITCH w/MANUAL OVERRIDE
S_H	HUMIDITY SENSOR SWITCH w/MANUAL OVERRIDE
S_{HO}	HUMIDITY+OCCUPANCY SENSOR SWITCH w/MANUAL OVERRIDE
S_M	MANUAL MOTOR STARTER/RATED SWITCH, w/THERMAL OVERLOAD PROTECTION. NUMBER OF POLES TO MATCH THE CIRCUIT BREAKER ITS FED FROM, RATING PER THE LOAD IT SERVES
S_P	PILOT LIGHT SWITCH
S_K	KEYED ON/OFF SWITCH
S_T	ASTRONOMICAL TIME CLOCK CONTROL SWITCH, SERVING A SINGLE 120VAC CIRCUIT

NOTE : ALL SWITCHES ARE TO BE MOUNTED AT +48"AFF UNLESS OTHER NOTED

LIGHTING CONTROL SYMBOLS

- OS OS — CEILING/WALL MOUNT OCCUPANCY SENSOR
- PS PS — CEILING/WALL MOUNT DAYLIGHT PHOTO SENSOR
- PS PS OS PS — CEILING/WALL MOUNT OCCUPANCY+DAYLIGHT PHOTO SENSOR COMBO
- RC — ROOM CONTROLLER
- PP — RELAY POWER PACK

BRANCH CIRCUIT CONDUCTOR SIZES & TYPES

USE THIS TABLE FOR BRANCH CIRCUIT WIRE SIZES, SEE PANEL SCHEDULE FOR BRANCH CIRCUITS

WIRE	BRANCH CKT AMPS	SIZE & QTY	ALLOWABLE CONDUCTORS
	20A-1P OR 2P	2#12+1#12G CU 3/4"C UON	1. USE ONLY COPPER, 75C RATED MIN. TYPE THHN, THWN, THHW, THWN FOR BRANCH CIRCUIT CONDUCTORS
	20A-3P	3#12+1#12G CU 3/4"C UON	
	30A-1P OR 2P	2#10+1#10G CU 3/4"C UON	2. REFER TO PLANS FOR ANY CONDUCTOR SIZING NOT SHOWN HERE
	30A-3P	3#10+1#10G CU 3/4"C UON	
	35/40A-1P OR 2P	2#8+1#10G CU 3/4"C UON	
	35/40A-3P	3#8+1#10G CU 3/4"C UON	
	45/50A-1P OR 2P	2#6+1#8G CU 3/4"C UON	
	45/50A-3P	3#6+1#8G CU 3/4"C UON	
	65/70A-1P OR 2P	2#4+1#8G CU 1"C UON	
	65/70A-3P	3#4+1#8G CU 1"C UON	

- A-1
- A-1,3
- A-1,3,5

1, 2 OR 3-POLE CIRCUIT. HOMERUN TO PANEL "A", 1,3,5 INDICATES CIRCUIT NO(PER PLANS). PROVIDE WIRING PER BRANCH CIRCUIT COND SIZING TABLE

NO. OF TICK MARKS INDICATE NO. OF CIRCUITS

A-1,3,5 — LINE/HOT, NEUTRAL, GROUND

MULTI CIRCUIT CONDUCTORS SHARING THE SAME RACEWAY, NEUTRAL SHARING IS NOT ALLOWED. PROVIDE ONE SHARED GRD CONDUCTOR FOR BOTH CIRCUITS. GROUND CONDUCTOR SIZE SHALL BE PER THE LARGEST CIRCUIT IN THE RACEWAY. ALL CONDUCTOR SIZING PER BRANCH CIRCUIT COND SIZING TABLE

CONDUIT LINETYPES

- ELECTRICAL CONDUIT ABOVE GRADE
- ELECTRICAL CONDUCIT BELOW GRADE/UNDERGROUND. MINIMUM COVER DEPTH PER CEC TABLE 300.5

NOTES:
1. USE PVC SCH. 40 FOR UNDERGROUND CONDUITS
2. USE RGS CONDUITS FOR EXPOSED WORK
3. USE EMT FOR INTERIOR CONCEALED WORK
4. CONTRACTOR CAN USE MC CABLES AS FEEDERS IN LIEU OF CONDUITS FOR INTERIOR WORK
5. NO EXPOSED CONDUITS ALLOWED FOR NEW CONSTRUCTION PROJECTS UNLESS CONDUITS ARE WITHIN ELECTRICAL ROOM

AGENCY

FLEWELLING & MOODY
architecture planning interiors

HEADQUARTERS OFFICE:
99 S. Lake Avenue, Suite 300
Pasadena, CA 91101
Phone: 323.543.8300
E-Mail: fm-pasadena@flewelling-moody.com

ANTELOPE VALLEY OFFICE:
1035 West Lancaster Boulvard
Lancaster, California 93534
Phone: 661.949.0771
E-Mail: fm-lancaster@flewelling-moody.com

An Employee Owned Corporation

ARCHITECT

CONSULTANT

Budlong
An MBE|SBE|DBE|LSBE Firm
Glendale|Downtown LA|Fremont|Camarillo
W W W . B U D L O N G . C O M
Job No. 23-140

REGISTERED PROFESSIONAL ENGINEER — MEAN H. CHILTON — No. EE 22864 — ELECTRICAL — STATE OF CALIFORNIA

Drawn by: Author
Check by: Checker
Revisions

No.	Date	Description
	01/26/24	100% DD
	03/01/24	50% CD
	05/09/24	90% CD
	08/05/24	100% CD
	11/25/24	100% CD V2
	01/31/25	100% CD V3
	12/17/24	PC CHANGES
1	6/9/25	BID ALTERNATE

All dimensions must be checked at the job by the contractor who accepts full responsibility for their accuracy under the contract. These plans & the specifications in connection therewith have been prepared for a specific site. Any and all responsibility for their use in whole or in part on any other site is hereby discla

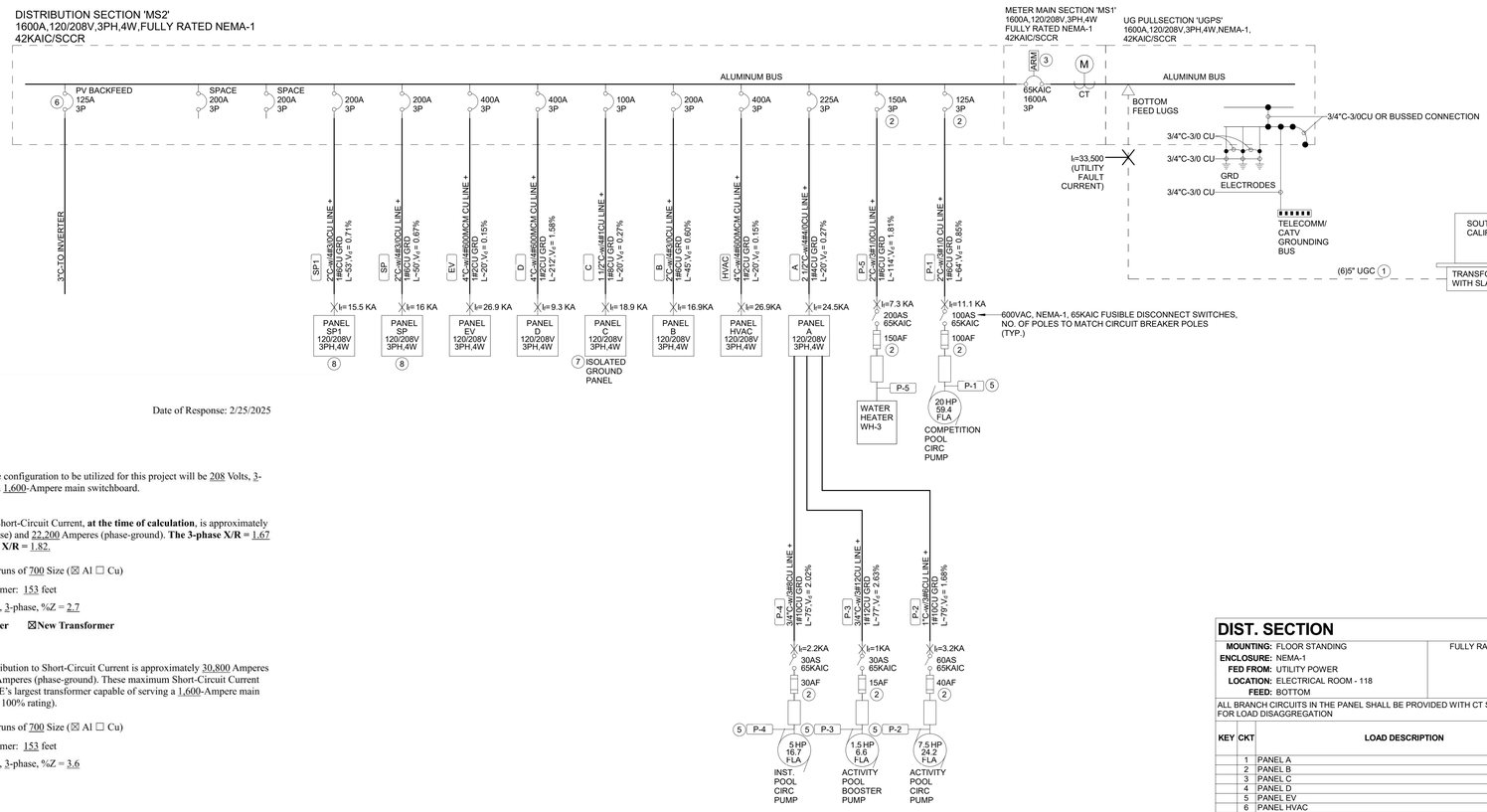

Date of Response: 2/25/2025

SOUTHERN CALIFORNIA EDISON
An EDISON INTERNATIONAL Company

(1) The voltage and service configuration to be utilized for this project will be 208 Volts, 3-phase, 4-wire to serve a 1,600-Ampere main switchboard.

(2) SCE's contribution to Short-Circuit Current, **at the time of calculation**, is approximately 19,100 Amperes (3-phase) and 22,200 Amperes (phase-ground). **The 3-phase X/R =** 1.67 **and the phase-ground X/R =** 1.82.

Service Conductors: 3 runs of 700 Size (☒ Al ☐ Cu)

Distance from Transformer: 153 feet

Transformer: 300 kVA, 3-phase, %Z = 2.7

☐**Existing Transformer** ☒**New Transformer**

(3) SCE's **maximum** contribution to Short-Circuit Current is approximately 30,800 Amperes (3-phase), and 33,500 Amperes (phase-ground). These maximum Short-Circuit Current values are based on SCE's largest transformer capable of serving a 1,600-Ampere main service switchboard (at 100% rating).

Service Conductors: 7 runs of 700 Size (☒ Al ☐ Cu)

Distance from Transformer: 153 feet

Transformer: 500 kVA, 3-phase, %Z = 3.6

DIST. SECTION		MS2
MOUNTING: FLOOR STANDING	FULLY RATED PANEL	**MAIN:** 1600A
ENCLOSURE: NEMA-1		**VOLTS:** 120/208 Wye
FED FROM: UTILITY POWER		**PHASE:** 3
LOCATION: ELECTRICAL ROOM - 118		**WIRE:** 4
FEED: BOTTOM		**AIC/SCCR:** 65KA

ALL BRANCH CIRCUITS IN THE PANEL SHALL BE PROVIDED WITH CT SPACES FOR FUTURE BRANCH CIRCUIT MONITORING FOR LOAD DISAGGREGATION

KEY	CKT	LOAD DESCRIPTION	LOAD VA	BRKR RATING	BRKS POLES
	1	PANEL A	61.7 kVA	225 A	3
	2	PANEL B	21.72 kVA	200 A	3
	3	PANEL C	4 kVA	100 A	3
	4	PANEL D	54.34 kVA	400 A	3
	5	PANEL EV	92.26 kVA	400 A	3
	6	PANEL HVAC	94.56 kVA	400 A	3
	7	PANEL SP	38.29 kVA	200 A	3
	8	PANEL SP1	15.87 kVA	200 A	3
	9	COMPETITION POOL CIRC PUMP	21.37 kVA	125 A	3
	10	WH-3 POOL MECHANICAL EQUIP. ROOM	37.4 kVA	150 A	3
--	11	SPACE	--	--	3
--	12	SPACE	--	--	3
		TOTALS			
		TOTAL CONNECTED VA:	441216 VA		
		LARGEST MOTOR x1.25	15755 VA		
		TOTAL DEMAND LOAD VA:	456971 VA		
		TOAL DEMAND AMPS:	1269.9 A		

CIRCUIT KEYNOTES	
1	
2	
3	

ELECTRICAL SERVICE LOAD CALCULATION

UTILITY(SCE)FAULT CURRENT LETTER

ELECTRICAL SINGLE LINE DIAGRAM

SCALE:NTS

1
E0.02

GENERAL NOTES

1. LENGTH OF FEEDERS SHOWN ON THE SINGLE LINE DIAGRAM ARE NOT TO BE USED FOR CONSTRUCTION OR BIDDING PURPOSE, CONTRACTOR TO VERIFY ACTUAL LENGTH REQUIRED.
2. ALL EQUIPMENT SHALL BE LISTED AND LABELED BY A NATIONALLY RECOGNIZED TESTING LABORATORY AND SHALL BE INSTALLED AS PER LISTING OR LABELING.
3. ALL DEVICES/EQUIPMENT AND TERMINALS SHALL BE RATED FOR 75°C AND FOR USE WITH 75° RATED CONDUCTORS AND SHALL BE TORQUED TO MANUFACTURERS LISTED SPECIFICATIONS.
4. ALL RACEWAYS SHALL CONTAIN A CODE-SIZED (CEC-250.122), INSULATED, GREEN, COPPER EQUIPMENT GROUNDING CONDUCTOR AND SHALL BE BONDED TO THE METALLIC COMPONENTS OF THE RACEWAY SYSTEM.
5. ALL CONDUCTORS TO BE COPPER OR ALUMINUM, AS NOTED, TYPE THWN/THHN, TEMP RATING MIN 75° ASSUME COPPER CONDUCTORS IF MATERIAL TYPE IS NOT FOUND ON PLANS OR PROVIDE A WRITTEN RFI/RFCI PRIOR TO BIDDING. 'CU' FOR COPPER AND 'AL' FOR ALUMINUM.
6. EQUIPMENT/DEVICES AND TERMINATIONS ARE RATED FOR 75°C AND FOR USE WITH 75° RATED CONDUCTORS.
7. BREAKER LUGS SHALL BE LARGE ENOUGH TO ACCOMMODATE CONDUCTORS. IN THE EVENT WHERE CONDUCTORS ARE LARGER THAN BREAKER LUGS CONTRACTOR MAY ALSO USE A 5FT SECTION OF SMALL SIZE CONDUCTORS TO CONNECT TO BREAKERS. IN NO CASE CONDUCTORS SHALL BE SMALLER THAN THE AMPACITIES ALLOWED IN CEC TABLE 310.15(B)(16). PROVIDE ADDITIONAL J-BOX FOR SPLICES.
8. CEC-110.22(C) EQUIPMENT ENCLOSURES FOR CIRCUIT BREAKERS AND FUSES APPLIED IN COMPLIANCE WITH THE SERIES RATINGS MARKED BY MFR. SHALL BE LEGIBLY MARKED IN THE FIELD TO INDICATE THE EQUIPMENT HAS BEEN APPLIED WITH SERIES RATINGS. THE MARKING SHALL MEET THE REQUIREMENT OF CEC110.21(B) AND SHALL BE READILY VISIBLE AND STATE FOLLOWING:
CAUTION SERIES COMBINATION SYSTEM RATED _____ AMPERES. IDENTIFIED REPLACEMENT COMPONENTS REQUIRED.

KEYNOTES

1	CONTRACTOR TO VERIFY CONDUIT REQUIREMENTS INCLUDING EXACT ROUTING, QTY, MATERIAL WITH UTILITY COMPANY PRIOR TO BEGINING OF WORK
2	BREAKER TO BE INVERSE TIME TYPE AND FUSE TO BE DUAL ELEMENT TIME DELAY TYPE
3	BREAKER TO BE PROVIDED WITH ARC ENERGY REDUCTION MAINTENANCE SYSTEM, PER 240.87
5	PROVIDE FINAL CONNECTION FROM VFD TO PUMP, REFER TO POOL CONSULTANT DRAWINGS FOR CONNECTION DIAGRAMS, COORDINATE WITH POOL CONTRACTOR
6	PV BACKFEED BREAKER AT THE OPPOSITE END OF THE UTILITY FEED
7	PROVIDE PANEL WITH ISOLATED GROUND BAR
8	200A, 120/208V, 3PH, 4W SURFACE MOUNT, TOP FEED, 65KAIC, FULLY RATED, MAIN BREAKER ELECTRICAL PANELS. REFER TO SHEET MR-7 FOR BRANCH CIRCUIT BREAKER REQUIREMENTS

AGENCY

REVIEWED FOR CODE COMPLIANCE BY: WILLDAN ENGINEERING

Approval of these plans & specifications shall not be construed to be a permit for, or an approval of any violation of any Federal, State, County or City laws or ordinances. One set of approved plans must be kept on the job until completion.

10:06:19 AM Jul 21, 2025

FLEWELLING & MOODY
architecture planning interiors

HEADQUARTERS OFFICE:
99 S. Lake Avenue, Suite 300
Pasadena, CA 91101
Phone: 323.543.8300
E-Mail: fm-pasadena@flewelling-moody.com

ANTELOPE VALLEY OFFICE:
1035 West Lancaster Boulevard
Lancaster, California 93534
Phone: 661.949.0771
E-Mail: fm-lancaster@flewelling-moody.com

An Employee Owned Corporation

ARCHITECT

CONSULTANT

Budlong
An MBE|SBE|DBE|LSBE Firm
Glendale|Downtown LA|Fremont|Camarillo
W W W . B U D L O N G . C O M

Job No. 23-140

REGISTERED PROFESSIONAL ENGINEER
OMAR H. CHRISTIAN
E 22864
21.00.25
ELECTRICAL
STATE OF CA

Drawn by: Author

Check by: Checker

Revisions

No.	Date	Description
	01/26/24	100% DD
	03/01/24	50% CD
	05/09/24	90% CD
	08/05/24	100% CD
	11/25/24	100% CD V2
	01/31/25	100% CD V3
	12/17/24	PC CHANGES

All dimensions must be checked at the job by the contractor who accepts full responsibility for their accuracy under the contract. These plans & the specifications in connection therewith have been prepared for a specific site. Any and all responsibility for their use in whole or in part on any other site is hereby disclaimed by Flewelling & Moody.

CITY OF RIDGECREST

SGT. JOHN PINNEY MEMORIAL POOL REPLACEMENT

205 S WARNER ST, RIDGECREST, CA 93555

Drawing Title

ELECTRICAL SINGLE LINE DIAGRAM

Job No. 3055-0100

Sheet No. E0.02

Date 05/09/2025

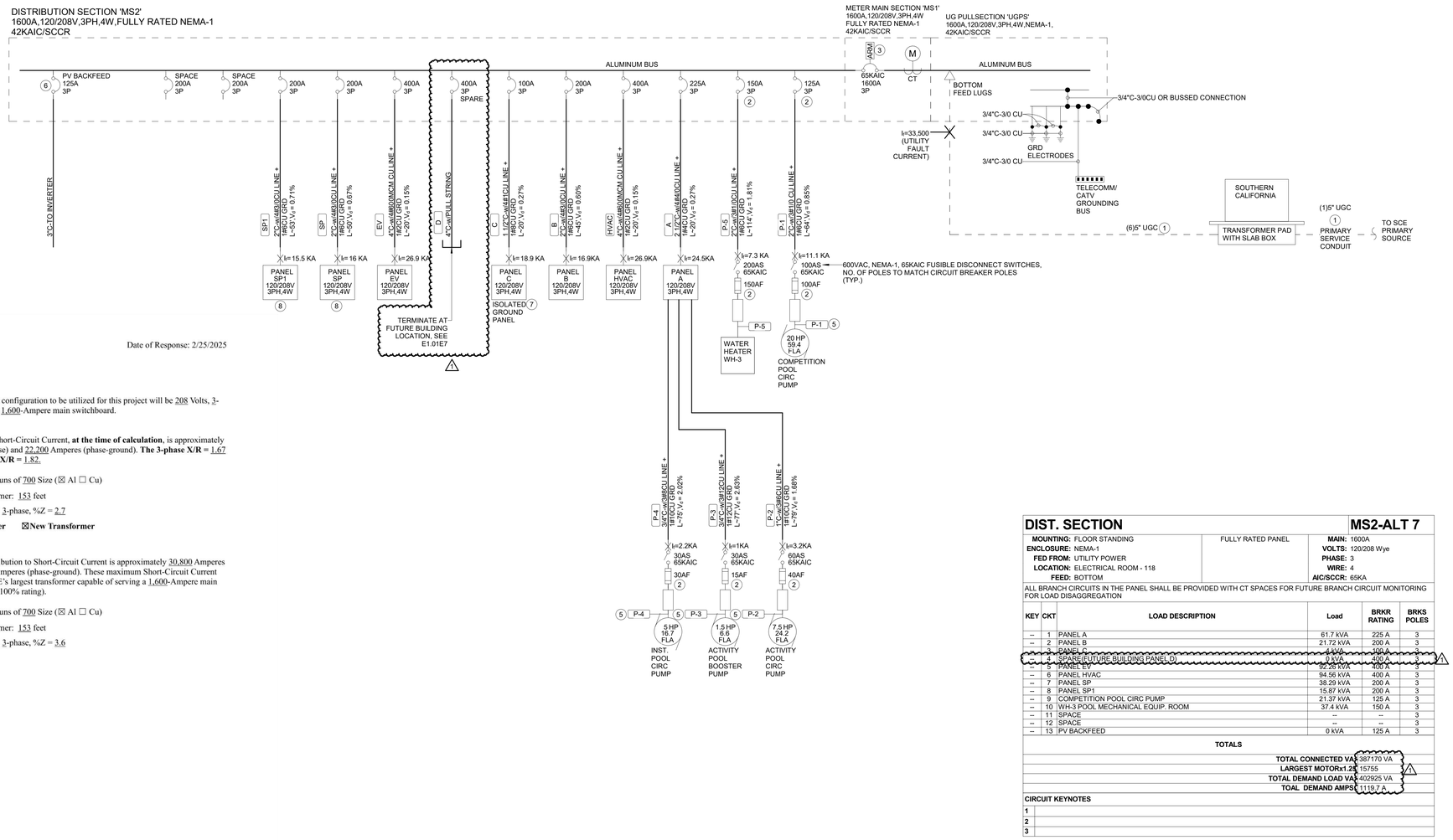

Date of Response: 2/25/2025

SOUTHERN CALIFORNIA EDISON
An EDISON INTERNATIONAL Company

(1) The voltage and service configuration to be utilized for this project will be 208 Volts, 3-phase, 4-wire to serve a 1,600-Ampere main switchboard.

(2) SCE's contribution to Short-Circuit Current, **at the time of calculation**, is approximately 19,100 Amperes (3-phase) and 22,200 Amperes (phase-ground). **The 3-phase X/R =** 1.67 **and the phase-ground X/R =** 1.82.

Service Conductors: 3 runs of 700 Size (☒ Al ☐ Cu)

Distance from Transformer: 153 feet

Transformer: 300 kVA, 3-phase, %Z = 2.7

☐**Existing Transformer** ☒**New Transformer**

(3) SCE's **maximum** contribution to Short-Circuit Current is approximately 30,800 Amperes (3-phase), and 33,500 Amperes (phase-ground). These maximum Short-Circuit Current values are based on SCE's largest transformer capable of serving a 1,600-Ampere main service switchboard (at 100% rating).

Service Conductors: 7 runs of 700 Size (☒ Al ☐ Cu)

Distance from Transformer: 153 feet

Transformer: 500 kVA, 3-phase, %Z = 3.6

DIST. SECTION		MS2-ALT 7
MOUNTING: FLOOR STANDING **ENCLOSURE:** NEMA-1 **FED FROM:** UTILITY POWER **LOCATION:** ELECTRICAL ROOM - 118 **FEED:** BOTTOM	FULLY RATED PANEL	**MAIN:** 1600A **VOLTS:** 120/208 Wye **PHASE:** 3 **WIRE:** 4 **AIC/SCCR:** 65KA

ALL BRANCH CIRCUITS IN THE PANEL SHALL BE PROVIDED WITH CT SPACES FOR FUTURE BRANCH CIRCUIT MONITORING FOR LOAD DISAGGREGATION

KEY	CKT	LOAD DESCRIPTION	Load	BRKR RATING	BRKS POLES
--	1	PANEL A	61.7 kVA	225 A	3
--	2	PANEL B	21.72 kVA	200 A	3
--	3	PANEL C	0 kVA	100 A	3
--	4	SPARE (FUTURE BUILDING PANEL D)	0 kVA	400 A	3
--	5	PANEL EV	92.26 kVA	400 A	3
--	6	PANEL HVAC	94.56 kVA	400 A	3
--	7	PANEL SP	38.29 kVA	200 A	3
--	8	PANEL SP1	15.87 kVA	200 A	3
--	9	COMPETITION POOL CIRC PUMP	21.37 kVA	125 A	3
--	10	WH-3 POOL MECHANICAL EQUIP. ROOM	37.4 kVA	150 A	3
--	11	SPACE	--	--	3
--	12	SPACE	--	--	3
--	13	PV BACKFEED	0 kVA	125 A	3
TOTALS					
		TOTAL CONNECTED VA	387170 VA		
		LARGEST MOTOR x1.25	15755		
		TOTAL DEMAND LOAD VA	402925 VA		
		TOAL DEMAND AMPS	1119.7 A		

CIRCUIT KEYNOTES

1	
2	
3	

ELECTRICAL SERVICE LOAD CALCULATION

UTILITY(SCE)FAULT CURRENT LETTER

ELECTRICAL SINGLE LINE DIAGRAM ALT 7

SCALE:NTS

1
E0.02A7

GENERAL NOTES

1. LENGTH OF FEEDERS SHOWN ON THE SINGLE LINE DIAGRAM ARE NOT TO BE USED FOR CONSTRUCTION OR BIDDING PURPOSE, CONTRACTOR TO VERIFY ACTUAL LENGTH REQUIRED.
2. ALL EQUIPMENT SHALL BE LISTED AND LABELED BY A NATIONALLY RECOGNIZED TESTING LABORATORY AND SHALL BE INSTALLED AS PER LISTING OR LABELING.
3. ALL DEVICES/EQUIPMENT AND TERMINALS SHALL BE RATED FOR 75°C AND FOR USE WITH 75° RATED CONDUCTORS AND SHALL BE TORQUED TO MANUFACTURERS LISTED SPECIFICATIONS.
4. ALL RACEWAYS SHALL CONTAIN A CODE-SIZED (CEC-250.122), INSULATED, GREEN, COPPER EQUIPMENT GROUNDING CONDUCTOR AND SHALL BE BONDED TO THE METALLIC COMPONENTS OF THE RACEWAY SYSTEM.
5. ALL CONDUCTORS TO BE COPPER OR ALUMINUM, AS NOTED, TYPE THWN/THHN, TEMP RATING MIN 75° ASSUME COPPER CONDUCTORS IF MATERIAL TYPE IS NOT FOUND ON PLANS OR PROVIDE A WRITTEN RFI/RFCI PRIOR TO BIDDING. 'CU' FOR COPPER AND 'AL' FOR ALUMINUM.
6. EQUIPMENT/DEVICES AND TERMINATIONS ARE RATED FOR 75°C AND FOR USE WITH 75° RATED CONDUCTORS.
7. BREAKER LUGS SHALL BE LARGE ENOUGH TO ACCOMMODATE CONDUCTORS. IN THE EVENT WHERE CONDUCTORS ARE LARGER THAN BREAKER LUGS CONTRACTOR MAY ALSO USE A 5FT SECTION OF SMALL SIZE CONDUCTORS TO CONNECT TO BREAKERS. IN NO CASE CONDUCTORS SHALL BE SMALLER THAN THE AMPACITIES ALLOWED IN CEC TABLE 310.15(B)(16). PROVIDE ADDITIONAL J-BOX FOR SPLICES.
8. CEC-110.22(C) EQUIPMENT ENCLOSURES FOR CIRCUIT BREAKERS AND FUSES APPLIED IN COMPLIANCE WITH THE SERIES RATINGS MARKED BY MFR. SHALL BE LEGIBLY MARKED IN THE FIELD TO INDICATE THE EQUIPMENT HAS BEEN APPLIED WITH SERIES RATINGS. THE MARKING SHALL MEET THE REQUIREMENT OF CEC110.21(B) AND SHALL BE READILY VISIBLE AND STATE FOLLOWING:
CAUTION SERIES COMBINATION SYSTEM RATED _____ AMPERES. IDENTIFIED REPLACEMENT COMPONENTS REQUIRED.

KEYNOTES

1	CONTRACTOR TO VERIFY CONDUIT REQUIREMENTS INCLUDING EXACT ROUTING, QTY, MATERIAL WITH UTILITY COMPANY PRIOR TO BEGINING OF WORK
2	BREAKER TO BE INVERSE TIME TYPE AND FUSE TO BE DUAL ELEMENT TIME DELAY TYPE
3	BREAKER TO BE PROVIDED WITH ARC ENERGY REDUCTION MAINTENANCE SYSTEM, PER 240.87
5	PROVIDE FINAL CONNECTION FROM VFD TO PUMP, REFER TO POOL CONSULTANT DRAWINGS FOR CONNECTION DIAGRAMS, COORDINATE WITH POOL CONTRACTOR
6	PV BACKFEED BREAKER AT THE OPPOSITE END OF THE UTILITY FEED
7	PROVIDE PANEL WITH ISOLATED GROUND BAR
8	200A, 120/208V, 3PH, 4W SURFACE MOUNT, TOP FEED, 65KAIC, FULLY RATED, MAIN BREAKER ELECTRICAL PANELS. REFER TO POOL CONSULTANT DRAWINGS SHEET MR-7 FOR BRANCH CIRCUIT BREAKER REQUIREMENTS

AGENCY

FLEWELLING & MOODY
architecture planning interiors

HEADQUARTERS OFFICE:
99 S. Lake Avenue, Suite 300
Pasadena, CA 91101
Phone: 323.543.8300
E-Mail: fm-pasadena@flewelling-moody.com

ANTELOPE VALLEY OFFICE:
1035 West Lancaster Boulevard
Lancaster, California 93534
Phone: 661.949.0771
E-Mail: fm-lancaster@flewelling-moody.com

An Employee Owned Corporation

ARCHITECT

CONSULTANT

Budlong
An MBE|SBE|DBE|LSBE Firm
Glendale|Downtown LA|Fremont|Camarillo
WWW.BUDLONG.COM
Job No. 23-140

REGISTERED PROFESSIONAL ENGINEER
ALEXANDER W. CHRISTY
No. E 22864
EXP. 8/31/25
ELECTRICAL
STATE OF CALIFORNIA

Drawn by: Author

Check by: Checker

Revisions

No.	Date	Description
	01/26/24	100% DD
	03/01/24	50% CD
	05/09/24	90% CD
	08/05/24	100% CD
	11/25/24	100% CD V2
	01/31/25	100% CD V3
	12/17/24	PC CHANGES
1	08/27/2025	BID ALTERNATE

All dimensions must be checked at the job by the contractor who accepts full responsibility for their accuracy under the contract. These plans & the specifications in connection therewith have been prepared for a specific site. Any and all responsibility for their use in whole or in part on any other site is hereby disclaimed by Flewelling & Moody.

CITY OF RIDGECREST

SGT. JOHN PINNEY MEMORIAL POOL REPLACEMENT

205 S WARNER ST, RIDGECREST, CA 93555

Drawing Title

ELECTRICAL SINGLE LINE DIAGRAM ALT 7

Job No. 3055-0000

Sheet No. **E0.02A7**

Date 08/07/2024

LIGHT FIXTURE SCHEDULE

TAG	FIXTURE TYPE	MFR	MODEL	MOUNTING	LUMENS	CRI	CCT	WATTS	VOLTAGE	DIMMING	DAMP/WET LOCATION LISTED(Y/N)	ACCESSORIES INTEGRATED WITH FIXTURES	REMARKS
A1-4	4FT RECESSED LINEAR LED	MARK ARCHITECTURAL LIGHTING	SL2L-LOP-4FT-FLP-GB-90CRI-35K-600LMF-MIN1-120-NLIGHT	CEILING RECESSED	2,132 lm	90	3500 K	24 VA	120V	0-10V	DAMP ONLY		SELECT FINISH PER ARCH
A1-8	8FT RECESSED LINEAR LED	MARK ARCHITECTURAL LIGHTING	SL4L-LOP-8FT-FLP-GB-90CRI-TUWH-PROR-600LMF-DARK-120-DPL	CEILING RECESSED	4,264 lm	90	3500 K	48 VA	120V	0-10V	DAMP ONLY		SELECT FINISH PER ARCH
A1-8E	8FT RECESSED LINEAR LED	MARK ARCHITECTURAL LIGHTING	SL4L-LOP-8FT-FLP-GB-90CRI-TUWH-PROR-600LMF-DARK-120-E10WLCP-DPL	CEILING RECESSED	4,264 lm	90	3500 K	48 VA	120V	0-10V	DAMP ONLY	EMERGENCY BATTERY PACK(4FT SECTION)	SELECT FINISH PER ARCH, PROVIDE A CONSTANT UNSWITCHED HOT WIRE TO THE FIXTURE
A2-4	4FT RECESSED LINEAR LED	MARK ARCHITECTURAL LIGHTING	SL2L-LOP-4FT-FLP-GB-90CRI-35K-800LMF-MIN1-120-NLIGHT	CEILING RECESSED	2,820 lm	90	3500 K	32 VA	120V	0-10V	DAMP ONLY		SELECT FINISH PER ARCH
A3-8	LINEAR PENDANT	MARK ARCHITECTURAL LIGHTING	S2PD-LLP-8FT-MSL8-90CRI-35K-600LMF-SCT-MIN1-DRP1-MVOLT-WHTT-NLIGHT-F2/-72A-RDCY-WHTCY-WCRD	CEILING SUSPENDED	4,376 lm	90	3500 K	38 VA	120-277V	0-10V	DAMP ONLY		SELECT FINISH PER ARCH
B1	4" RECESSED DOWNLIGHT	GOTHAM LIGHTING	EVO4-30/10-AR-FL-LSS-WD-MVOLT-EZ1-NLT	CEILING RECESSED	1,001 lm	90	3000 K	9 VA	120-277V	0-10V	Y		
B2	2" RECESSED DOWNLIGHT	ACULUX LIGHTING	AX2 A G2-08LM-35K-80CRI-45D-ZT-MVOLT-CPICAT-2ABV-W-FM-FMA2 /120	CEILING RECESSED	800 lm	80	3500 K	9 VA	120-277V	0-10V	DAMP ONLY		
C1-4	PENDANT STRIP LIGHT	LITHONIA LIGHTING	CLX-L48-3000LM-SEF-FDL-MVOLT-EZ1-35K-90CRI-WH-ZAC120	CEILING SUSPENDED	3,592 lm	90	3500 K	26 VA	120-277V	0-10V	DAMP ONLY		
C2-4	PENDANT STRIP LIGHT	LITHONIA LIGHTING	CLX-L48-5000LM-SEF-FDL-MVOLT-EZ1-35K-90CRI-WH-ZAC120	CEILING SUSPENDED	5,143 lm	90	3500 K	32 VA	120-277V	0-10V	DAMP ONLY		
C3-8	PENDANT STRIP LIGHT	LITHONIA LIGHTING	CLX-L96-6000LM-SEF-FDL-MVOLT-EZ1-35K-90CRI-WH-ZAC120	CEILING SUSPENDED	5,803 lm	90	3500 K	37 VA	120-277V	0-10V	DAMP ONLY		
C3-8E	PENDANT STRIP LIGHT	LITHONIA LIGHTING	CLX-L96-6000LM-SEF-FDL-MVOLT-EZ1-35K-90CRI-E10WLCP-WH-ZAC120	CEILING SUSPENDED	5,803 lm	90	3500 K	37 VA	120-277V	0-10V	DAMP ONLY	EMERGENCY BATTERY PACK	PROVIDE A CONSTANT UNSWITCHED HOT WIRE TO THE FIXTURE
E	CIRCULAT PENDANT	SONNEMAN LIGHTING	2318.16-35	CEILING SUSPENDED	2,400 lm	90	3500 K	45 VA	120V	0-10V	DAMP ONLY		SELECT FINISH PER ARCH
F	WALL PACK	LITHONIA LIGHTING	WDGE2 LED P4 30K 90CRI VW MVOLT DDBXD	WALL MOUNT	4,515 lm	90	3000 K	35 VA	120-277V	0-10V	DAMP ONLY		
FE	WALL PACK	LITHONIA LIGHTING	WDGE2 LED P4 30K 90CRI VW MVOLT E4WH DDBXD	WALL MOUNT	4,515 lm	90	3000 K	35 VA	120-277V	0-10V	DAMP ONLY	EMERGENCY BATTERY PACK	PROVIDE A CONSTANT UNSWITCHED HOT WIRE TO THE FIXTURE
G1-4	4FT RECESSED LINEAR LED	3G LIGHTING	3G-1RMZSL-D500-H90-35K-55D-UNV-DIM-XTR-WH-WLV-S-4FT	CEILING RECESSED	2,000 lm	90	3500 K	24 VA	120/277V	0-10V	N		SELECT FINISH PER ARCH
G1-8	8FT RECESSED LINEAR LED	3G LIGHTING	3G-1RMZSL-D500-H90-35K-55D-UNV-DIM-XTR-WH-WLV-S-8FT	CEILING RECESSED	4,000 lm	90	3500 K	47 VA	120V	0-10V	N		SELECT FINISH PER ARCH
H1	WALL CYLINDER	GOTHAM LIGHTING	EVO4WC-30/25-AR-LESS-ASYM-MVOLT-GZ10-JBX-DN-WL-90CRI-DDB	WALL MOUNT	2,580 lm	90	3000 K	26 VA	120-277V	0-10V	Y		
H2	WALL CYLINDER	GOTHAM LIGHTING	EVO4WC-30/15-AR-LESS-ASYM-MVOLT-GZ10-JBX-DN-WL-90CRI-DDB	WALL MOUNT	2,580 lm	90	3000 K	14 VA	120-277V	0-10V	Y		
I	BOLLARD	US ARCHITECTURAL LIGHTING	BYB80-PLED-2-20LED-175mA-30K-UNV-RAL-9005-T-AL-SF	BOLLARD	1,212 lm	70	3000 K	11 VA	120-277V	0-10V	Y		
S1	POLE LIGHT	LIGHT-LITHONIA LIGHTING, POLE-VALMONT STRUCTURES	LIGHT : DSX0 LED-P1-30K-80CRI-T2M-MVOLT-EGSR-RPA-DDBXD, POLE : R-140045454S4-D1-DNA	POLE MOUNT	4,545 lm	80	3000 K	33 VA	120-277V	0-10V	Y		POLE NOT REQUIRED FOR LIGHTING IN POOL DECK AREAS AS THEY ARE MOUNTED ON MUSCO POLES
S2	POLE LIGHT	LIGHT-LITHONIA LIGHTING, POLE-VALMONT STRUCTURES	LIGHT : DSX0 LED-P1-30K-80CRI-T2M-MVOLT-RPA-DDBXD, POLE : R-140045454S4-D2-DNA	POLE MOUNT	4,545 lm	80	3000 K	33 VA	120-277V	0-10V	Y		

SPORTS LIGHT FIXTURE SCHEDULE

TAG	FIXTURE TYPE	MFR	MODEL	MOUNTING	LUMENS	CRI	CCT	WATTS	VOLTAGE	DIMMING	DAMP/WET LOCATION LISTED(Y/N)	ACCESSORIES INTEGRATED WITH FIXTURES	REMARKS
SL1	SPORTS LIGHT	SPORTS BEAMS	COURT LED 350-SB 350 4 5700 70 277 G	POLE MOUNT	39,396 lm	70	5700 K	1400 VA	208V	0-10V	Y	POLE, CONTROL BOX & WIRE HARNESS	

REMARKS

1. POLES FOR SPORT LIGHT FIXTURES SHALL BE PROVIDED BY SPORTS LIGHT MANUFACTURER
2. EACH POLE SHALL BE SUPPLIED WITH A POWER/CONTROL BOX AND SHALL BE PROVIDED BY MANUFACTURER
3. ALL LIGHT FIXTURES SHALL BE PROVIDED WITH POWER AND 0-10V DIMMING HARNESS , PROVIDED BY MANUFACTURER. CONTRACTOR CONNECT WIRING HARNESS FROM FIXTURES TO POWER/CONTROL BOX IN FIELD. RUN WIRING FROM POWER/LIGHTING CONTROL PANEL TO THE BOX
4. CONTRACTOR SHALL RUN POWER/CONTROL WIRING UPTO THE FIXTURE FOR ANY EMERGENCY LIGHT FIXTURES MOUNTED ON THE SPORTS LIGHTING POLE
5. SEE SHEET E1.02 FOR LIGHTING CIRCUITING AND POWER SUPPLY

EXIT SIGN LIGHT FIXTURE SCHEDULE

TAG	MANUFACTURER	MODEL	MOUNTING	DESCRIPTION SHORT	VA	VOLTAGE	DAMP/WET LOCATION LISTED(Y/N)	ACCESSORIES INTEGRATED WITH FIXTURES	REMARKS
EX1	LITHONIA LIGHTING	LQM-S-W-3-R-MVOLT-EL N-SD	CEILING MOUNTED	EXIT SIGN	5 VA	120/277V	DAMP ONLY	90 MINUTE INTEGRATED BATTERY PACK	PROVIDE CONSTANT UNSWITCHED HOT WIRE

AGENCY

REVIEWED FOR CODE COMPLIANCE BY: WILLDAN ENGINEERING

Approval of these plans & specifications shall not be construed to be a permit for, or an approval of any violation of any Federal, State, County or City laws or ordinances. One set of approved plans must be kept on the job until completion.

10:06:20 AM Jul 21, 2025

FLEWELLING & MOODY
architecture planning interiors

HEADQUARTERS OFFICE:
99 S. Lake Avenue, Suite 300
Pasadena, CA 91101
Phone: 323.543.8300
E-Mail: fm-pasadena@flewelling-moody.com

ANTELOPE VALLEY OFFICE:
1035 West Lancaster Boulevard
Lancaster, California 93534
Phone: 661.949.0771
E-Mail: fm-lancaster@flewelling-moody.com

An Employee Owned Corporation

ARCHITECT

CONSULTANT

Budlong
An MBE|SBE|DBE|LSBE Firm
Glendale|Downtown LA|Fremont|Camarillo
W W W . B U D L O N G . C O M
Job No. 23-140

REGISTERED PROFESSIONAL ENGINEER — JAMES H. CHRISTIAN — E 22864 — 2/28/25 — ELECTRICAL — STATE OF CA

Drawn by: Author

Check by: Checker

Revisions

No.	Date	Description
	01/26/24	100% DD
	03/01/24	50% CD
	05/09/24	90% CD
	08/05/24	100% CD
	11/25/24	100% CD V2
	01/31/25	100% CD V3

All dimensions must be checked at the job by the contractor who accepts full responsibility for their accuracy under the contract. These plans & the specifications in connection therewith have been prepared for a specific site. Any and all responsibility for their use in whole or in part on any other site is hereby disclaimed by Flewelling & Moody.

CITY OF RIDGECREST

SGT. JOHN PINNEY MEMORIAL POOL REPLACEMENT

205 S WARNER ST, RIDGECREST, CA 93555

Drawing Title

ELECTRICAL LIGHTING FIXTURE SCHEDULE

Job No. 3055-0100

Date 05/09/2025

Sheet No. **E0.03**

PANEL A

MOUNTING: SURFACE
ENCLOSURE: NEMA-1
FED FROM: MS2
LOCATION: ELECTRICAL ROOM -108
FEED: BOTTOM FEED

MAIN BREAKER AIC RATING 42KA
BRANCH BREAKER AIC RATING 42KA
FULLY RATED RATED PANEL
BOLT ON BREAKERS

MAIN: 225A
VOLTS: 120/208 Wye
PHASE: 3
WIRE: 4
BUS: 225A
AIC/SCCR: 42KA

NOTES: ALL BRANCH CIRCUITS IN THE PANEL SHALL BE PROVIDED WITH CT SPACES FOR FUTURE BRANCH CIRCUIT MONITORING FOR LOAD DISAGGREGATION

KEY	CKT NO.	LOAD DESCRIPTION	OCPD AMPS	P	A	B	C	OCPD P	AMPS	LOAD DESCRIPTION	CKT NO.	KEY
	1	ENTRY/LOBBY RECP.	20 A	1	360	800		1	20 A	ENTRY LOBBY COMPUTER RECP.	2	
	3	HALLWAY RECP.	20 A	1		720	1000	1	20 A	DRINKING FOUNTAIN	4	
	5	ADMINISTRATION OFFICE	20 A	1			720	500	1	20 A	WATER HEATER POWER-1	6	
	7	WATER HEATER POWER-2	20 A	1	1000	180			1	20 A	ELECTRICAL ROOM RECEP.	8	
	9	EMPLOYEE RESTROOM	20 A	1		180	540		1	20 A	SICK BAY RECEP.	10	
	11	LIFE GUARD FACILITIES RECEP.	20 A	1			180	--	1	--	SPACE	12	--
--	13	SPACE	--	1	--	720			1	20 A	MENS RESTRM+SHOWER RECP.	14	
	15	SERVICE RECP.	20 A	1		720	1200		1	20 A	FRIDGE	16	
	17	COMMUNITY ROOM RECP-1	20 A	1			1120	1200	1	20 A	FREEZER	18	
	19	SCOREBOARD CIRCUIT-1	20 A	1	1200	1200			1	20 A	SCOREBOARD CIRCUIT-2	20	
	21	SCOREBOARD CIRCUIT-3	20 A	1		1200	360		1	20 A	ACID & CHLORINE STORAGE RECP.	22	
	23	SINK-1 DRYER(GFCI BRKR)	15 A	1			1200	1200	1	15 A	SINK-2 DRYER(GFCI BRKR)	24	
	25	HALLWAY RECP.-2	20 A	1	540	1100			1	20 A	REFRIGERATOR-1	26	
	27	LIFE GUARD FACILITIES RECEP.-1	20 A	1		1340	100		1	20 A	DUCT SMOKE DET.	28	1
1	29	FIRE ALARM CONTROL PANEL	20 A	1			100	1200	1	20 A	SCOREBOARD CIRCUIT-4	30	
	31	SCOREBOARD CIRCUIT-5	20 A	1	1200	1000			1	20 A	WATER HEATER POWER-3	32	
1	33	MOOTORIZED DAMPER POWER SUPPLY	20 A	1		600	1200		1	20 A	SCOREBOARD CIRCUIT-6	34	
	35	SCOREBOARD CIRCUIT-7	20 A	1			1200	540	1	20 A	POOL EQUIP. ROOM SERVICE RECEP.	36	
	37	BUILDING EXTERIOR RECEPTACLE	20 A	1	720	792			1	20 A	ACTIVITY POOL BOOSTER PUMP DISC.	38	
	39	CP-1	20 A	1		180	792		--	--	--	40	--
	41	ACTIVITY POOL CIRC PUMP DISC.	50 A	3			2903	792	--	--	--	42	--
--	43	--	--	--	2903	2003			3	40 A	INST. POOL CIRC PUMP DISC.	44	
--	45	--	--	--		2903	2003		--	--	--	46	--
	47	IRRIGATION CONTROLLER POWER	20 A	1			800	2003	--	--	--	48	--
	49	CO2 SENSOR	20 A	1	100	180			1	20 A	JANITOR ROOM SERVICE RECEP.	50	
	51	WEST PARKING LOT RECEPTACLE	20 A	1		180	1200		1	15 A	SINK-3 DRYER(GFCI BRKR)	52	
	53	SINK-4 DRYER(GFCI BRKR)	15 A	1			1200	1200	1	15 A	SINK-5 DRYER(GFCI BRKR)	54	
	55	SINK-6 DRYER(GFCI BRKR)	15 A	1	1200	1200			1	15 A	SINK-7 DRYER(GFCI BRKR)	56	
	57	SINK-8 DRYER(GFCI BRKR)	15 A	1		1200	1200		1	15 A	SINK-9 DRYER(GFCI BRKR)	58	
	59	SINK-10 DRYER(GFCI BRKR)	15 A	1			1200	--	1	--	SPACE	60	--
--	61	SPACE	--	1	--	2000			1	20 A	FOOD WARMER	62	
	63	METERING PUMP 1	20 A	1		204	204		1	20 A	METERING PUMP 2	64	
	65	METERING PUMP 3	20 A	1			204	204	1	20 A	METERING PUMP 4	66	
	67	METERING PUMP 5	20 A	1	204	204			1	20 A	METERING PUMP 6	68	
	69	FOOD WARMER-2	20 A	1		2000	--		1	--	SPACE	70	--
--	71	SPACE	--	1			--	--	1	--	SPACE	72	--
			Total Load:		20.81 kVA		21.23 kVA			19.67 kVA			
			Total Amps:		173.4 A		176.9 A			163.9 A			

LOAD SUMMARY

DEMAND LOADS	DEMAND FACTOR	DEMAND VA	TOTALS	
LONG CONT. LOAD	1.25	0 VA		
			TOTAL LOAD:	61696 VA
			TOTAL DEMAND LOAD:	61696 VA
			TOTAL CURRENT:	171.4 A
			TOTAL DEMAND CURRENT:	171.5 A

CIRCUIT KEY NOTES:

PANEL EV

MOUNTING: SURFACE
ENCLOSURE: NEMA-1
FED FROM: MS2
LOCATION: ELECTRICAL ROOM - 108
FEED: TOP FEED

MAIN BREAKER AIC RATING 42KA
BRANCH BREAKER AIC RATING 42KA
FULLY RATED RATED PANEL
BOLT ON BREAKERS

MAIN: 400A
VOLTS: 120/208 Wye
PHASE: 3
WIRE: 4
BUS: 400A
AIC/SCCR: 42KA

NOTES: ALL BRANCH CIRCUITS IN THE PANEL SHALL BE PROVIDED WITH CT SPACES FOR FUTURE BRANCH CIRCUIT MONITORING FOR LOAD DISAGGREGATION

KEY	CKT NO.	LOAD DESCRIPTION	OCPD AMPS	P	A	B	C	OCPD P	AMPS	LOAD DESCRIPTION	CKT NO.	KEY
	1	EV CHARGER-1	45 A	2	3600	3600		2	45 A	EV CHARGER-2, PORT-1	2	
--	3	--	--	--		3600	3600	--	--	--	4	--
	5	EV CHARGER-2, PORT-2	45 A	2			3600	3600	2	45 A	EV CAPABLE SPACE-1	6	
--	7	--	--	--	3600	3600			--	--	--	8	--
	9	EV CAPABLE SPACE-2	45 A	2			3600	3600	2	45 A	EV CAPABLE SPACE-3	10	
--	11	--	--	--				3600	3600	--	--	--	12	--
	13	EV CAPABLE SPACE-4	45 A	2	3600	3600				2	45 A	EV CAPABLE SPACE-5	14	
--	15	--	--	--			3600	3600		--	--	--	16	--
	17	EV CAPABLE SPACE-6	45 A	2				3600	3600	2	45 A	EV CAPABLE SPACE-7	18	
--	19	--	--	--	3600	3600				--	--	--	20	--
	21	EV CAPABLE SPACE-8	45 A	2			3600	3600		2	45 A	EV CAPABLE SPACE-9	22	
--	23	--	--	--				3600	3600	--	--	--	24	--
	25	EV CAPABLE SPACE-10	45 A	2	3600	--				1	--	SPACE	26	--
--	27	--	--	--		3600	--			1	--	SPACE	28	--
--	29	SPACE	--	1				--	--	1	--	SPACE	30	--
--	31	SPACE	--	1	--	--				1	--	SPACE	32	--
--	33	SPACE	--	1			--	--		1	--	SPACE	34	--
--	35	SPACE	--	1				--	--	1	--	SPACE	36	--
--	37	SPACE	--	1	--	--				1	--	SPACE	38	--
--	39	SPACE	--	1			--	--		1	--	SPACE	40	--
--	41	SPACE	--	1	--	--				1	--	SPACE	42	--
--	43	SPACE	--	1				--	--	1	--	SPACE	44	--
--	45	SPACE	--	1			--	--		1	--	SPACE	46	--
--	47	SPACE	--	1				--	--	1	--	SPACE	48	--
--	49	SPACE	--	1	--	--				1	--	SPACE	50	--
--	51	SPACE	--	1			--	--		1	--	SPACE	52	--
--	53	SPACE	--	1				--	--	1	--	SPACE	54	--
			Total Load:		31.82 kVA		31.95 kVA			28.55 kVA			
			Total Amps:		265.2 A		266.2 A			237.9 A			

LOAD SUMMARY

DEMAND LOADS	DEMAND FACTOR	DEMAND VA	TOTALS	
LONG CONT. LOAD	1.25	23065 VA		
			TOTAL LOAD:	92315 VA
			TOTAL DEMAND LOAD:	115380 VA
			TOTAL CURRENT:	256.4 A
			TOTAL DEMAND CURRENT:	320.6 A

CIRCUIT KEY NOTES:

PANEL B

MOUNTING: SURFACE
ENCLOSURE: NEMA-1
FED FROM: MS2
LOCATION: ELECTRICAL ROOM - 108
FEED: BOTTOM FEED

MAIN BREAKER AIC RATING 22KA
BRANCH BREAKER AIC RATING 22KA
FULLY RATED RATED PANEL
BOLT ON BREAKERS

MAIN: 200A
VOLTS: 120/208 Wye
PHASE: 3
WIRE: 4
BUS: 200A
AIC/SCCR: 22KA

NOTES: ALL BRANCH CIRCUITS IN THE PANEL SHALL BE PROVIDED WITH CT SPACES FOR FUTURE BRANCH CIRCUIT MONITORING FOR LOAD DISAGGREGATION

KEY	CKT NO.	LOAD DESCRIPTION	OCPD AMPS	P	A	B	C	OCPD P	AMPS	LOAD DESCRIPTION	CKT NO.	KEY
	1	INDOOR LIGHTING-1	20 A	1	1185	930		1	20 A	INDOOR LIGHTING-2	2	
	3	INDOOR LIGHTING-3	20 A	1			1175	430	1	20 A	OUTDOOR LIGHTING-1	4	
	5	PARKING LOT LIGHTING-1	20 A	1				297	800	1	20 A	LIGHTING TOUCHSCREEN	6	
	7	LIGHTING CONTROLLER	20 A	1	800	800				1	20 A	LIGHTING CONTROL PANEL	8	
	9	SPORTS LIGHTING P1	15 A	2			700	700		2	15 A	SPORTS LIGHTING P2	10	
--	11	--	--	--				700	700	--	--	--	12	--
	13	SPORTS LIGHTING P3	15 A	2	700	700				2	15 A	SPORTS LIGHTING P5	14	
--	15	--	--	--			700	700		--	--	--	16	--
	17	SPORTS LIGHTING P4	15 A	2				700	700	2	15 A	SPORTS LIGHTING P6	18	
--	19	--	--	--	700	700				--	--	--	20	--
	21	INVERTER 'INV'	30 A	1			931	360		1	20 A	ACCESSIBLE RESTRM-1,2	22	
	23	SINK-12 DRYER(GFCI BRKR)	15 A	1				1200	1200	1	15 A	SINK-11 DRYER(GFCI BRKR)	24	
	25	WOMENS RESTRM+SHOWER RECP.	20 A	1	720	1200				1	20 A	SINK-13 DRYER(GFCI BRKR)	26	
	27	SINK-14 DRYER(GFCI BRKR)	20 A	1			1200	100		1	20 A	CSFD	28	
--	29	SPARE	20 A	1				0	0	1	20 A	SPARE	30	--
--	31	SPARE	20 A	1	0	0				1	20 A	SPARE	32	--
--	33	SPACE	--	1			--	--		1	--	SPACE	34	--
--	35	SPACE	--	1				--	--	1	--	SPACE	36	--
--	37	SPACE	--	1	--	--				1	--	SPACE	38	--
--	39	SPACE	--	1			--	--		1	--	SPACE	40	--
--	41	SPACE	--	1				--	--	1	--	SPACE	42	--
			Total Load:		8.42 kVA		7.00 kVA			6.30 kVA			
			Total Amps:		70.2 A		58.3 A			52.5 A			

LOAD SUMMARY

DEMAND LOADS	DEMAND FACTOR	DEMAND VA	TOTALS	
LONG CONT. LOAD	1.25	3334 VA		
			TOTAL LOAD:	21716 VA
			TOTAL DEMAND LOAD:	25051 VA
			TOTAL CURRENT:	60.3 A
			TOTAL DEMAND CURRENT:	69.6 A

CIRCUIT KEY NOTES:

PANEL HVAC

MOUNTING: SURFACE
ENCLOSURE: NEMA-1
FED FROM: MS2
LOCATION: ELECTRICAL ROOM - 108
FEED: BOTTOM FEED

MAIN BREAKER AIC RATING 42KA
BRANCH BREAKER AIC RATING 42KA
FULLY RATED RATED PANEL
BOLT ON BREAKERS

MAIN: 400A
VOLTS: 120/208 Wye
PHASE: 3
WIRE: 4
BUS: 400A
AIC/SCCR: 42KA

NOTES: ALL BRANCH CIRCUITS IN THE PANEL SHALL BE PROVIDED WITH CT SPACES FOR FUTURE BRANCH CIRCUIT MONITORING FOR LOAD DISAGGREGATION

KEY	CKT NO.	LOAD DESCRIPTION	OCPD AMPS	P	A	B	C	OCPD P	AMPS	LOAD DESCRIPTION	CKT NO.	KEY
	1	EF-6 & EF-7	20 A	1	1020	344		2	15 A	FCU-2,3,4	2	
	3	EF-5	20 A	2			800	344	--	--	--	4	--
--	5	--	--	--				800	593	2	15 A	FCU-1	6	
	7	HP-2	20 A	2	1560	593				--	--	--	8	--
--	9	--	--	--			1560	1020		1	20 A	EF-3 & EF-8	10	
	11	EF-1	20 A	2				800	510	1	20 A	EF-11	12	
--	13	--	--	--	800	1768				2	25 A	HP-1	14	
	15	EF-2	20 A	1			510	1768		--	--	--	16	--
	17	SF-1	20 A	2				800	433	2	20 A	FCU-3 & EF-4 CONTROL INTERFACE	18	
--	19	--	--	--	800	433				--	--	--	20	--
	21	DOAS-1	150 A	3			13882	4318		3	45 A	CU-1	22	
--	23	--	--	--				13882	4318	--	--	--	24	--
--	25	--	--	--	13882	4318				--	--	--	26	--
	27	EF-4 RELAY	20 A	1			510	481		2	15 A	FCU-5,6	28	
	29	CU-2	45 A	3				4354	481	--	--	--	30	--
--	31	--	--	--	4354	1560				2	20 A	HP-3	32	
--	33	--	--	--			4354	1560		--	--	--	34	--
	35	ELECTRIC HEATER EH-1	30 A	2					2527	--	1	--	SPACE	36	--
--	37	--	--	--	2527	--					1	--	SPACE	38	--
--	39	SPACE	--	1			--	--			1	--	SPACE	40	--
--	41	SPACE	--	1					--	--	1	--	SPACE	42	--
			Total Load:		33.96 kVA		31.11 kVA			29.50 kVA			
			Total Amps:		283 A		259.2 A			245.8 A			

LOAD SUMMARY

DEMAND LOADS	DEMAND FACTOR	DEMAND VA	TOTALS	
LONG CONT. LOAD	1.25	0 VA		
LARGEST MOTOR LOAD	1.25	10412 VA		
			TOTAL LOAD:	94564 VA
			TOTAL DEMAND LOAD:	104976 VA
			TOTAL CURRENT:	262.7 A
			TOTAL DEMAND CURRENT:	291.7 A

CIRCUIT KEY NOTES:

DIST. SECTION — MS2

MOUNTING: FLOOR STANDING
ENCLOSURE: NEMA-1
FED FROM: UTILITY POWER
LOCATION: ELECTRICAL ROOM - 118
FEED: BOTTOM

FULLY RATED PANEL

MAIN: 1600A
VOLTS: 120/208 Wye
PHASE: 3
WIRE: 4
AIC/SCCR: 65KA

ALL BRANCH CIRCUITS IN THE PANEL SHALL BE PROVIDED WITH CT SPACES FOR FUTURE BRANCH CIRCUIT MONITORING FOR LOAD DISAGGREGATION

KEY	CKT	LOAD DESCRIPTION	LOAD VA	BRKR RATING	BRKS POLES
	1	PANEL A	61.7 kVA	225 A	3
	2	PANEL B	21.72 kVA	200 A	3
	3	PANEL C	4 kVA	100 A	3
	4	PANEL D	54.34 kVA	400 A	3
	5	PANEL EV	92.26 kVA	400 A	3
	6	PANEL HVAC	94.56 kVA	400 A	3
	7	PANEL SP	38.29 kVA	200 A	3
	8	PANEL SP1	15.87 kVA	200 A	3
	9	COMPETITION POOL CIRC PUMP	21.37 kVA	125 A	3
	10	WH-3 POOL MECHANICAL EQUIP. ROOM	37.4 kVA	150 A	3
--	11	SPACE	--	--	3
--	12	SPACE	--	--	3

TOTALS

TOTAL CONNECTED VA:	441216 VA
LARGEST MOTORx1.25	15755 VA
TOTAL DEMAND LOAD VA:	456971 VA
TOTAL DEMAND AMPS:	1269.9 A

CIRCUIT KEYNOTES

1	
2	
3	

PANEL D

MOUNTING: SURFACE MOUNT
ENCLOSURE: NEMA-1
FED FROM: MS2
LOCATION: POOL EQUIPMENT STORAGE 134
FEED: BOTTOM FEED

MAIN BREAKER AIC RATING 22KA
BRANCH BREAKER AIC RATING 22KA
FULLY RATED RATED PANEL
BOLT ON BREAKERS

MAIN: 400A
VOLTS: 120/208 Wye
PHASE: 3
WIRE: 4
BUS: 400A
AIC/SCCR: 22KA

NOTES: ALL BRANCH CIRCUITS IN THE PANEL SHALL BE PROVIDED WITH CT SPACES FOR FUTURE BRANCH CIRCUIT MONITORING FOR LOAD DISAGGREGATION

KEY	CKT NO.	LOAD DESCRIPTION	OCPD AMPS	P	A	B	C	OCPD P	AMPS	LOAD DESCRIPTION	CKT NO.	KEY
	1	MOTORIZED DOOR-1	20 A	1	1200	1200		1	20 A	MOTORIZED DOOR-2	2	
	3	RESTROOMS-1,2	20 A	1			360	360	1	20 A	RESTROOMS-3,4	4	
	5	EF-9,10	20 A	2					590	--	1	--	SPACE	6	--
--	7	--	--	--	590	1080					1	20 A	RECP.	8	
	9	POOL EQUIP. STORAGE LIGHTING	20 A	1			629	290			1	20 A	POOL EQUIP. STORAGE OUTDOOR...	10	
	11	TIME CLOCK	20 A	1					800	1200	1	15 A	SINK-1 DRYER(GFCI BRKR)	12	
	13	WH-3	150 A	3	12467	1200					1	15 A	SINK-2 DRYER(GFCI BRKR)	14	
--	15	--	--	--			12467	1200			1	15 A	SINK-3 DRYER(GFCI BRKR)	16	
--	17	--	--	--					12467	1200	1	15 A	SINK-4 DRYER(GFCI BRKR)	18	
	19	ELECTRIC HEATER EH-2	30 A	2	2527	--					1	--	SPACE	20	--
--	21	--	--	--			2527	--			1	--	SPACE	22	--
--	23	SPACE	--	1					--	--	1	--	SPACE	24	--
--	25	SPACE	--	1	--	--					1	--	SPACE	26	--
--	27	SPACE	--	1			--	--			1	--	SPACE	28	--
--	29	SPACE	--	1					--	--	1	--	SPACE	30	--
--	31	SPACE	--	1	--	--					1	--	SPACE	32	--
--	33	SPACE	--	1			--	--			1	--	SPACE	34	--
--	35	SPACE	--	1					--	--	1	--	SPACE	36	--
--	37	SPACE	--	1	--	--					1	--	SPACE	38	--
--	39	SPACE	--	1			--	--			1	--	SPACE	40	--
--	41	SPACE	--	1					--	--	1	--	SPACE	42	--
			Total Load:		20.26 kVA		17.82 kVA			16.26 kVA			
			Total Amps:		168.9 A		148.5 A			135.5 A			

LOAD SUMMARY

DEMAND LOADS	DEMAND FACTOR	DEMAND VA	TOTALS	
LONG CONT. LOAD	1.25	229 VA		
			TOTAL LOAD:	54338 VA
			TOTAL DEMAND LOAD:	54567 VA
			TOTAL CURRENT:	150.9 A
			TOTAL DEMAND CURRENT:	151.6 A

CIRCUIT KEY NOTES:

PANEL C

MOUNTING: SURFACE
ENCLOSURE: NEMA-1
FED FROM: MS2
LOCATION: JANITORIAL - 109
FEED: BOTTOM FEED

MAIN BREAKER AIC RATING 22KA
BRANCH BREAKER AIC RATING 22KA
FULLY RATED RATED PANEL
BOLT ON BREAKERS

MAIN: 100A
VOLTS: 120/208 Wye
PHASE: 3
WIRE: 4
BUS: 200A
AIC/SCCR: 22KA

NOTES:

KEY	CKT NO.	LOAD DESCRIPTION	OCPD AMPS	P	A	B	C	OCPD P	AMPS	LOAD DESCRIPTION	CKT NO.	KEY
	1	LV UTILITY POWER SUPPLY	20 A	1	1000	1000		1	20 A	LV RACK RECP-1	2	
	3	LV RACK RECP-2	20 A	1			1000	1000	1	20 A	LV RACK RECP-3	4	
--	5	SPACE	--	1					--	--	1	--	SPACE	6	--
--	7	SPACE	--	1	--	--					1	--	SPACE	8	--
--	9	SPACE	--	1			--	--			1	--	SPACE	10	--
--	11	SPACE	--	1					--	--	1	--	SPACE	12	--
--	13	SPACE	--	1	--	--					1	--	SPACE	14	--
--	15	SPACE	--	1			--	--			1	--	SPACE	16	--
--	17	SPACE	--	1					--	--	1	--	SPACE	18	--
--	19	SPACE	--	1	--	--					1	--	SPACE	20	--
--	21	SPACE	--	1			--	--			1	--	SPACE	22	--
--	23	SPACE	--	1					--	--	1	--	SPACE	24	--
--	25	SPACE	--	1	--	--					1	--	SPACE	26	--
--	27	SPACE	--	1			--	--			1	--	SPACE	28	--
--	29	SPACE	--	1					--	--	1	--	SPACE	30	--
			Total Load:		2.00 kVA		2.00 kVA			0.00 kVA			
			Total Amps:		16.7 A		16.7 A			0 A			

LOAD SUMMARY

DEMAND LOADS	DEMAND FACTOR	DEMAND VA	TOTALS	
LONG CONT. LOAD	1.25	0 VA		
			TOTAL LOAD:	4000 VA
			TOTAL DEMAND LOAD:	4000 VA
			TOTAL CURRENT:	11.1 A
			TOTAL DEMAND CURRENT:	11.1 A

CIRCUIT KEY NOTES:

INVERTER — INV

MOUNTING: SURFACE
ENCLOSURE: NEMA-1
FED FROM: B
LOCATION: ELECTRICAL ROOM - 108
FEED: ---

FULLY RATED RATED INVERTER

MAIN: 20A
VOLTS: 120V
PHASE: 1
WIRE: 2
BUS: ---
AIC/SCCR: 10KA

NOTES: MIN. 2.2KVA INVERTER 'INV', USE MYERS 1EM-3-S-B-A-20-6. PROVIDE UL924 LISTED SHUNT RELAY FOR EACH EMERGENCY CIRCUIT, USE MYERS-EPC-2-D

KEY	CKT NO.	LOAD DESCRIPTION	OCPD AMPS	P	B	OCPD P	AMPS	LOAD DESCRIPTION	CKT NO.	KEY
	1	EMERGENCY LIGHTING-1	20 A	1	651	280	1	20 A	POOL DECK EMERGENCY LIGHTING	2	
	3									4	
	5									6	
	7									8	
	9									10	
			Total Load:		0.93 kVA						
			Total Amps:		7.8 A						

LOAD SUMMARY

DEMAND LOADS	DEMAND FACTOR	DEMAND VA	TOTALS	
LONG CONT. LOAD	1.25	233 VA		
			TOTAL LOAD:	931 VA
			TOTAL DEMAND LOAD:	1163 VA
			TOTAL CURRENT:	7.8 A
			TOTAL DEMAND CURRENT:	9.7 A

CIRCUIT KEY NOTES:

REFER TO SINGLE LINE DIAGRAM AND POOL CONSULTANT DRAWING SHEET MR-7 FOR ELECTRICAL PANEL SP AND SP-1 REQUIREMENTS

PANEL SCHEDULE INDEX

PANEL A	PANEL B	PANEL D
PANEL EV	PANEL HVAC	PANEL C
	PANEL MS2	

AGENCY

REVIEWED FOR CODE COMPLIANCE BY: WILLDAN ENGINEERING

Approval of these plans & specifications shall not be construed to be a permit for, or an approval of any violation of any Federal, State, County or City laws or ordinances. One set of approved plans must be kept on the job until completion.

10:06:21 AM Jul 21, 2025

FLEWELLING & MOODY
architecture planning interiors

HEADQUARTERS OFFICE:
99 S. Lake Avenue, Suite 300
Pasadena, CA 91101
Phone: 323.543.8300
E-Mail: fm-pasadena@flewelling-moody.com

ANTELOPE VALLEY OFFICE:
1035 West Lancaster Bouldvard
Lancaster, California 93534
Phone: 661.949.0771
E-Mail: fm-lancaster@flewelling-moody.com

An Employee Owned Corporation

ARCHITECT

CONSULTANT

Budlong
An MBE|SBE|DBE|LSBE Firm
Glendale|Downtown LA|Fremont|Camarillo
W W W . B U D L O N G . C O M
Job No. 23-140

REGISTERED PROFESSIONAL ENGINEER — MARK H. CHRISTIAN — No. E 22864 — ELECTRICAL — STATE OF CALIFORNIA

Drawn by: Author
Check by: Checker
Revisions

No.	Date	Description
	01/26/24	100% DD
	03/01/24	50% CD
	05/09/24	90% CD
	08/05/24	100% CD
	11/25/24	100% CD V2
	01/31/25	100% CD V3
	12/17/24	PC CHANGES

All dimensions must be checked at the job by the contractor who accepts full responsibility for their accuracy under the contract. These plans & the specifications in connection therewith have been prepared for a specific site. Any and all responsibility for their use in whole or in part on any other site is hereby disclaimed by Flewelling & Moody.

CITY OF RIDGECREST

SGT. JOHN PINNEY MEMORIAL POOL REPLACEMENT

205 S WARNER ST, RIDGECREST, CA 93555

Drawing Title

ELECTRICAL PANEL SCHEDULE

Job No. 3055-0100
Sheet No. **E0.04**
Date 05/09/2025

PANEL A

MOUNTING: SURFACE
ENCLOSURE: NEMA-1
FED FROM: MS2
LOCATION: ELECTRICAL ROOM -108
FEED: BOTTOM FEED

MAIN BREAKER AIC RATING 42KA
BRANCH BREAKER AIC RATING 42KA
FULLY RATED RATED PANEL
BOLT ON BREAKERS

MAIN: 225A
VOLTS: 120/208 Wye
PHASE: 3
WIRE: 4
BUS: 225A
AIC/SCCR: 42KA

NOTES: ALL BRANCH CIRCUITS IN THE PANEL SHALL BE PROVIDED WITH CT SPACES FOR FUTURE BRANCH CIRCUIT MONITORING FOR LOAD DISAGGREGATION

KEY	CKT NO.	LOAD DESCRIPTION	OCPD AMPS	P	A	B	C	OCPD P	AMPS	LOAD DESCRIPTION	CKT NO.	KEY
	1	ENTRY/LOBBY RECP.	20 A	1	360	800		1	20 A	ENTRY LOBBY COMPUTER RECP.	2	
	3	HALLWAY RECP.	20 A	1			720 1000	1	20 A	DRINKING FOUNTAIN	4	
	5	ADMINISTRATION OFFICE	20 A	1			720 500	1	20 A	WATER HEATER POWER-1	6	
	7	WATER HEATER POWER-2	20 A	1	1000	180		1	20 A	ELECTRICAL ROOM RECEP.	8	
	9	EMPLOYEE RESTROOM	20 A	1		180	540	1	20 A	SICK BAY RECEP.	10	
	11	LIFE GUARD FACILITIES RECEP.	20 A	1			180 --	1	--	SPACE	12	--
--	13	SPACE	--	1	--	720		1	20 A	MENS RESTRM+SHOWER RECP.	14	
	15	SERVICE RECP.	20 A	1		720	1200	1	20 A	FRIDGE	16	
	17	COMMUNITY ROOM RECP-1	20 A	1			1120 1200	1	20 A	FREEZER	18	
	19	SCOREBOARD CIRCUIT-1	20 A	1	1200	1200		1	20 A	SCOREBOARD CIRCUIT-2	20	
	21	SCOREBOARD CIRCUIT-3	20 A	1		1200	360	1	20 A	ACID & CHLORINE STORAGE RECP.	22	
	23	SINK-1 DRYER(GFCI BRKR)	15 A	1			1200 1200	1	15 A	SINK-2 DRYER(GFCI BRKR)	24	
	25	HALLWAY RECP.-2	20 A	1	540	1100		1	20 A	REFRIGERATOR-1	26	
	27	LIFE GUARD FACILITIES RECEP.-1	20 A	1		1340	100	1	20 A	DUCT SMOKE DET.	28	1
1	29	FIRE ALARM CONTROL PANEL	20 A	1			100 1200	1	20 A	SCOREBOARD CIRCUIT-4	30	
	31	SCOREBOARD CIRCUIT-5	20 A	1	1200	1000		1	20 A	WATER HEATER POWER-3	32	
1	33	MOOTORIZED DAMPER POWER SUPPLY	20 A	1		600	1200	1	20 A	SCOREBOARD CIRCUIT-6	34	
	35	SCOREBOARD CIRCUIT-7	20 A	1			1200 540	1	20 A	POOL EQUIP. ROOM SERVICE RECEP.	36	
	37	BUILDING EXTERIOR RECEPTACLE	20 A	1	720	792		1	20 A	ACTIVITY POOL BOOSTER PUMP DISC.	38	
	39	CP-1	20 A	1		180	792	--	--	--	40	--
	41	ACTIVITY POOL CIRC PUMP DISC.	50 A	3			2903 792	--	--	--	42	--
--	43	--	--	--	2903	2003		3	40 A	INST. POOL CIRC PUMP DISC.	44	
--	45	--	--	--		2903	2003	--	--	--	46	--
	47	IRRIGATION CONTROLLER POWER	20 A	1			800 2003	--	--	--	48	--
	49	CO2 SENSOR	20 A	1	100	180		1	20 A	JANITOR ROOM SERVICE RECEP.	50	
	51	WEST PARKING LOT RECEPTACLE	20 A	1		180	1200	1	15 A	SINK-3 DRYER(GFCI BRKR)	52	
	53	SINK-4 DRYER(GFCI BRKR)	15 A	1			1200 1200	1	15 A	SINK-5 DRYER(GFCI BRKR)	54	
	55	SINK-6 DRYER(GFCI BRKR)	15 A	1	1200	1200		1	15 A	SINK-7 DRYER(GFCI BRKR)	56	
	57	SINK-8 DRYER(GFCI BRKR)	15 A	1		1200	1200	1	15 A	SINK-9 DRYER(GFCI BRKR)	58	
	59	SINK-10 DRYER(GFCI BRKR)	15 A	1			1200 --	1	--	SPACE	60	--
--	61	SPACE	--	1	--	2000		1	20 A	FOOD WARMER	62	
	63	METERING PUMP 1	20 A	1		204	204	1	20 A	METERING PUMP 2	64	
	65	METERING PUMP 3	20 A	1			204 204	1	20 A	METERING PUMP 4	66	
	67	METERING PUMP 5	20 A	1	204	204		1	20 A	METERING PUMP 6	68	
	69	FOOD WARMER-2	20 A	1		2000	--	1	--	SPACE	70	--
--	71	SPACE	--	1			-- --	1	--	SPACE	72	--
			Total Load:		20.81 kVA		21.23 kVA			19.67 kVA		
			Total Amps:		173.4 A		176.9 A			163.9 A		

LOAD SUMMARY

DEMAND LOADS	DEMAND FACTOR	DEMAND VA	TOTALS
LONG CONT. LOAD	1.25	0 VA	
			TOTAL LOAD: 61696 VA
			TOTAL DEMAND LOAD: 61696 VA
			TOTAL CURRENT: 171.4 A
			TOTAL DEMAND CURRENT: 171.5 A

CIRCUIT KEY NOTES:
1. BREAKER TO BE PROVIDED ON LOCK ON DEVICE.

PANEL EV

MOUNTING: SURFACE
ENCLOSURE: NEMA-1
FED FROM: MS2
LOCATION: ELECTRICAL ROOM - 108
FEED: TOP FEED

MAIN BREAKER AIC RATING 42KA
BRANCH BREAKER AIC RATING 42KA
FULLY RATED RATED PANEL
BOLT ON BREAKERS

MAIN: 400A
VOLTS: 120/208 Wye
PHASE: 3
WIRE: 4
BUS: 400A
AIC/SCCR: 42KA

NOTES: ALL BRANCH CIRCUITS IN THE PANEL SHALL BE PROVIDED WITH CT SPACES FOR FUTURE BRANCH CIRCUIT MONITORING FOR LOAD DISAGGREGATION

KEY	CKT NO.	LOAD DESCRIPTION	OCPD AMPS	P	A	B	C	OCPD P	AMPS	LOAD DESCRIPTION	CKT NO.	KEY
	1	EV CHARGER-1	45 A	2	3600	3600		2	45 A	EV CHARGER-2, PORT-1	2	
--	3	--	--	--		3600	3600	--	--	--	4	--
	5	EV CHARGER-2, PORT-2	45 A	2			3600 3600	2	45 A	EV CAPABLE SPACE-1	6	
--	7	--	--	--	3600	3600		--	--	--	8	--
	9	EV CAPABLE SPACE-2	45 A	2			3600 3600	2	45 A	EV CAPABLE SPACE-3	10	
--	11	--	--	--			3600 3600	--	--	--	12	--
	13	EV CAPABLE SPACE-4	45 A	2	3600	3600		2	45 A	EV CAPABLE SPACE-5	14	
--	15	--	--	--		3600	3600	--	--	--	16	--
	17	EV CAPABLE SPACE-6	45 A	2			3600 3600	2	45 A	EV CAPABLE SPACE-7	18	
--	19	--	--	--	3600	3600		--	--	--	20	--
	21	EV CAPABLE SPACE-8	45 A	2		3600	3600	2	45 A	EV CAPABLE SPACE-9	22	
--	23	--	--	--			3600 3600	--	--	--	24	--
	25	EV CAPABLE SPACE-10	45 A	2	3600	--		1	--	SPACE	26	--
--	27	--	--	--		3600	--	1	--	SPACE	28	--
--	29	SPACE	--	1			-- --	1	--	SPACE	30	--
--	31	SPACE	--	1	--	--		1	--	SPACE	32	--
--	33	SPACE	--	1		--	--	1	--	SPACE	34	--
--	35	SPACE	--	1			-- --	1	--	SPACE	36	--
--	37	SPACE	--	1	--	--		1	--	SPACE	38	--
--	39	SPACE	--	1			-- --	1	--	SPACE	40	--
--	41	SPACE	--	1			-- --	1	--	SPACE	42	--
			Total Load:		31.82 kVA		31.95 kVA			28.55 kVA		
			Total Amps:		265.2 A		266.2 A			237.9 A		

LOAD SUMMARY

DEMAND LOADS	DEMAND FACTOR	DEMAND VA	TOTALS
LONG CONT. LOAD	1.25	23065 VA	
			TOTAL LOAD: 92315 VA
			TOTAL DEMAND LOAD: 115380 VA
			TOTAL CURRENT: 256.4 A
			TOTAL DEMAND CURRENT: 320.6 A

CIRCUIT KEY NOTES:

PANEL B

MOUNTING: SURFACE
ENCLOSURE: NEMA-1
FED FROM: MS2
LOCATION: ELECTRICAL ROOM - 108
FEED: BOTTOM FEED

MAIN BREAKER AIC RATING 22KA
BRANCH BREAKER AIC RATING 22KA
FULLY RATED RATED PANEL
BOLT ON BREAKERS

MAIN: 200A
VOLTS: 120/208 Wye
PHASE: 3
WIRE: 4
BUS: 200A
AIC/SCCR: 22KA

NOTES: ALL BRANCH CIRCUITS IN THE PANEL SHALL BE PROVIDED WITH CT SPACES FOR FUTURE BRANCH CIRCUIT MONITORING FOR LOAD DISAGGREGATION

KEY	CKT NO.	LOAD DESCRIPTION	OCPD AMPS	P	A	B	C	OCPD P	AMPS	LOAD DESCRIPTION	CKT NO.	KEY
	1	INDOOR LIGHTING-1	20 A	1	1185	930		1	20 A	INDOOR LIGHTING-2	2	
	3	INDOOR LIGHTING-3	20 A	1			1175 430	1	20 A	OUTDOOR LIGHTING-1	4	
	5	PARKING LOT LIGHTING-1	20 A	1			297 800	1	20 A	LIGHTING TOUCHSCREEN	6	
	7	LIGHTING CONTROLLER	20 A	1	800	800		1	20 A	LIGHTING CONTROL PANEL	8	
	9	SPORTS LIGHTING P1	15 A	2		700	700	2	15 A	SPORTS LIGHTING P2	10	
--	11	--	--	--			700 700	--	--	--	12	--
	13	SPORTS LIGHTING P3	15 A	2	700	700		2	15 A	SPORTS LIGHTING P5	14	
--	15	--	--	--		700	700	--	--	--	16	--
	17	SPORTS LIGHTING P4	15 A	2			700 700	2	15 A	SPORTS LIGHTING P6	18	
--	19	--	--	--	700	700		--	--	--	20	--
	21	INVERTER 'INV'	30 A	1		931	360	1	20 A	ACCESSIBLE RESTRM-1,2	22	
	23	SINK-12 DRYER(GFCI BRKR)	15 A	1			1200 1200	1	15 A	SINK-11 DRYER(GFCI BRKR)	24	
	25	WOMENS RESTRM+SHOWER RECP.	20 A	1	720	1200		1	20 A	SINK-13 DRYER(GFCI BRKR)	26	
	27	SINK-14 DRYER(GFCI BRKR)	20 A	1		1200	100	1	20 A	CSFD	28	
--	29	SPARE	20 A	1			0 0	1	20 A	SPARE	30	--
--	31	SPARE	20 A	1	0	0		1	20 A	SPARE	32	--
--	33	SPACE	--	1		--	--	1	--	SPACE	34	--
--	35	SPACE	--	1			-- --	1	--	SPACE	36	--
--	37	SPACE	--	1	--	--		1	--	SPACE	38	--
--	39	SPACE	--	1		--	--	1	--	SPACE	40	--
--	41	SPACE	--	1			-- --	1	--	SPACE	42	--
			Total Load:		8.42 kVA		7.00 kVA			6.30 kVA		
			Total Amps:		70.2 A		58.3 A			52.5 A		

LOAD SUMMARY

DEMAND LOADS	DEMAND FACTOR	DEMAND VA	TOTALS
LONG CONT. LOAD	1.25	3334 VA	
			TOTAL LOAD: 21716 VA
			TOTAL DEMAND LOAD: 25051 VA
			TOTAL CURRENT: 60.3 A
			TOTAL DEMAND CURRENT: 69.6 A

CIRCUIT KEY NOTES:

PANEL HVAC

MOUNTING: SURFACE
ENCLOSURE: NEMA-1
FED FROM: MS2
LOCATION: ELECTRICAL ROOM - 108
FEED: BOTTOM FEED

MAIN BREAKER AIC RATING 42KA
BRANCH BREAKER AIC RATING 42KA
FULLY RATED RATED PANEL
BOLT ON BREAKERS

MAIN: 400A
VOLTS: 120/208 Wye
PHASE: 3
WIRE: 4
BUS: 400A
AIC/SCCR: 42KA

NOTES: ALL BRANCH CIRCUITS IN THE PANEL SHALL BE PROVIDED WITH CT SPACES FOR FUTURE BRANCH CIRCUIT MONITORING FOR LOAD DISAGGREGATION

KEY	CKT NO.	LOAD DESCRIPTION	OCPD AMPS	P	A	B	C	OCPD P	AMPS	LOAD DESCRIPTION	CKT NO.	KEY
	1	EF-6 & EF-7	20 A	1	1020	344		2	15 A	FCU-2,3,4	2	
	3	EF-5	20 A	2			800 344	--	--	--	4	--
--	5	--	--	--			800 593	2	15 A	FCU-1	6	
	7	HP-2	20 A	2	1560	593		--	--	--	8	--
--	9	--	--	--			1560 1020	1	20 A	EF-3 & EF-8	10	
	11	EF-1	20 A	2			800 510	1	20 A	EF-11	12	
--	13	--	--	--	800	1768		2	25 A	HP-1	14	
	15	EF-2	20 A	1		510	1768	--	--	--	16	--
	17	SF-1	20 A	2			800 433	2	20 A	FCU-3 & EF-4 CONTROL INTERFACE	18	
--	19	--	--	--	800	433		--	--	--	20	--
	21	DOAS-1	150 A	3		13882	4318	3	45 A	CU-1	22	
--	23	--	--	--			13882 4318	--	--	--	24	--
--	25	--	--	--	13882	4318		--	--	--	26	--
	27	EF-4 RELAY	20 A	1		510	481	2	15 A	FCU-5,6	28	
	29	CU-2	45 A	3			4354 481	--	--	--	30	--
--	31	--	--	--	4354	1560		2	20 A	HP-3	32	
--	33	--	--	--		4354	1560	--	--	--	34	--
	35	ELECTRIC HEATER EH-1	30 A	2			2527 --	1	--	SPACE	36	--
--	37	--	--	--	2527	--		1	--	SPACE	38	--
--	39	SPACE	--	1		--	--	1	--	SPACE	40	--
--	41	SPACE	--	1			-- --	1	--	SPACE	42	--
			Total Load:		33.96 kVA		31.11 kVA			29.50 kVA		
			Total Amps:		283 A		259.2 A			245.8 A		

LOAD SUMMARY

DEMAND LOADS	DEMAND FACTOR	DEMAND VA	TOTALS
LONG CONT. LOAD	1.25	0 VA	
LARGEST MOTOR LOAD	1.25	10412 VA	
			TOTAL LOAD: 94564 VA
			TOTAL DEMAND LOAD: 104976 VA
			TOTAL CURRENT: 262.7 A
			TOTAL DEMAND CURRENT: 291.7 A

CIRCUIT KEY NOTES:

DIST. SECTION — MS2

MOUNTING: FLOOR STANDING
ENCLOSURE: NEMA-1
FED FROM: UTILITY POWER
LOCATION: ELECTRICAL ROOM - 118
FEED: BOTTOM

FULLY RATED PANEL

MAIN: 1600A
VOLTS: 120/208 Wye
PHASE: 3
WIRE: 4
AIC/SCCR: 65KA

ALL BRANCH CIRCUITS IN THE PANEL SHALL BE PROVIDED WITH CT SPACES FOR FUTURE BRANCH CIRCUIT MONITORING FOR LOAD DISAGGREGATION

KEY	CKT	LOAD DESCRIPTION	Load	BRKR RATING	BRKS POLES
	1	PANEL A	61.7 kVA	225 A	3
	2	PANEL B	21.72 kVA	200 A	3
	3	PANEL C	4 kVA	100 A	3
	4	PANEL D	54.37 kVA	400 A	3
	5	PANEL EV	92.26 kVA	400 A	3
	6	PANEL HVAC	94.56 kVA	400 A	3
	7	PANEL SP	38.29 kVA	200 A	3
	8	PANEL SP1	15.87 kVA	200 A	3
	9	COMPETITION POOL CIRC PUMP	21.37 kVA	125 A	3
	10	WH-3 POOL MECHANICAL EQUIP. ROOM	37.4 kVA	150 A	3
--	11	SPACE	--	--	3
--	12	SPACE	--	--	3
--	13	PV BACKFEED	0 kVA	125 A	3

TOTALS

TOTAL CONNECTED VA:	441251 VA
LARGEST MOTORx1.25	15755 VA
TOTAL DEMAND LOAD VA:	457006 VA
TOTAL DEMAND AMPS:	1270 A

CIRCUIT KEYNOTES

1	
2	
3	

PANEL D

MOUNTING: SURFACE MOUNT
ENCLOSURE: NEMA-1
FED FROM: MS2
LOCATION: POOL EQUIPMENT STORAGE 134
FEED: BOTTOM FEED

MAIN BREAKER AIC RATING 22KA
BRANCH BREAKER AIC RATING 22KA
FULLY RATED RATED PANEL
BOLT ON BREAKERS

MAIN: 400A
VOLTS: 120/208 Wye
PHASE: 3
WIRE: 4
BUS: 400A
AIC/SCCR: 22KA

NOTES: ALL BRANCH CIRCUITS IN THE PANEL SHALL BE PROVIDED WITH CT SPACES FOR FUTURE BRANCH CIRCUIT MONITORING FOR LOAD DISAGGREGATION

KEY	CKT NO.	LOAD DESCRIPTION	OCPD AMPS	P	A	B	C	OCPD P	AMPS	LOAD DESCRIPTION	CKT NO.	KEY
	1	MOTORIZED DOOR-1	20 A	1	1200	1200		1	20 A	MOTORIZED DOOR-2	2	
	3	RESTROOMS-1,2	20 A	1			360 360	1	20 A	RESTROOMS-3,4	4	
	5	EF-9,10	20 A	2			590 --	1	--	SPACE	6	--
--	7	--	--	--	590	1080		1	20 A	RECP.	8	
	9	POOL EQUIP. STORAGE LIGHTING	20 A	1			629 325	1	20 A	POOL EQUIP. STORAGE OUTDOOR...	10	
	11	TIME CLOCK	20 A	1			800 1200	1	15 A	SINK-1 DRYER(GFCI BRKR)	12	
	13	WH-3	150 A	3	12467	1200		1	15 A	SINK-2 DRYER(GFCI BRKR)	14	
--	15	--	--	--		12467	1200	1	15 A	SINK-3 DRYER(GFCI BRKR)	16	
--	17	--	--	--			12467 1200	1	15 A	SINK-4 DRYER(GFCI BRKR)	18	
	19	ELECTRIC HEATER EH-2	30 A	2	2527	--		1	--	SPACE	20	--
--	21	--	--	--		2527	--	1	--	SPACE	22	--
--	23	SPACE	--	1			-- --	1	--	SPACE	24	--
--	25	SPACE	--	1	--	--		1	--	SPACE	26	--
--	27	SPACE	--	1		--	--	1	--	SPACE	28	--
--	29	SPACE	--	1			-- --	1	--	SPACE	30	--
--	31	SPACE	--	1	--	--		1	--	SPACE	32	--
--	33	SPACE	--	1		--	--	1	--	SPACE	34	--
--	35	SPACE	--	1			-- --	1	--	SPACE	36	--
--	37	SPACE	--	1	--	--		1	--	SPACE	38	--
--	39	SPACE	--	1		--	--	1	--	SPACE	40	--
--	41	SPACE	--	1			-- --	1	--	SPACE	42	--
			Total Load:		20.26 kVA		17.85 kVA			16.26 kVA		
			Total Amps:		168.9 A		148.8 A			135.5 A		

LOAD SUMMARY

DEMAND LOADS	DEMAND FACTOR	DEMAND VA	TOTALS
LONG CONT. LOAD	1.25	237 VA	
			TOTAL LOAD: 54373 VA
			TOTAL DEMAND LOAD: 54611 VA
			TOTAL CURRENT: 151 A
			TOTAL DEMAND CURRENT: 151.8 A

CIRCUIT KEY NOTES:

PANEL C

MOUNTING: SURFACE
ENCLOSURE: NEMA-1
FED FROM: MS2
LOCATION: JANITORIAL - 109
FEED: BOTTOM FEED

MAIN BREAKER AIC RATING 22KA
BRANCH BREAKER AIC RATING 22KA
FULLY RATED RATED PANEL
BOLT ON BREAKERS

MAIN: 100A
VOLTS: 120/208 Wye
PHASE: 3
WIRE: 4
BUS: 200A
AIC/SCCR: 22KA

NOTES:

KEY	CKT NO.	LOAD DESCRIPTION	OCPD AMPS	P	A	B	C	OCPD P	AMPS	LOAD DESCRIPTION	CKT NO.	KEY
	1	LV UTILITY POWER SUPPLY	20 A	1	1000	1000		1	20 A	LV RACK RECP-1	2	
	3	LV RACK RECP-2	20 A	1		1000	1000	1	20 A	LV RACK RECP-3	4	
--	5	SPACE	--	1			-- --	1	--	SPACE	6	--
--	7	SPACE	--	1	--	--		1	--	SPACE	8	--
--	9	SPACE	--	1		--	--	1	--	SPACE	10	--
--	11	SPACE	--	1			-- --	1	--	SPACE	12	--
--	13	SPACE	--	1	--	--		1	--	SPACE	14	--
--	15	SPACE	--	1		--	--	1	--	SPACE	16	--
--	17	SPACE	--	1			-- --	1	--	SPACE	18	--
--	19	SPACE	--	1	--	--		1	--	SPACE	20	--
--	21	SPACE	--	1		--	--	1	--	SPACE	22	--
--	23	SPACE	--	1			-- --	1	--	SPACE	24	--
--	25	SPACE	--	1	--	--		1	--	SPACE	26	--
--	27	SPACE	--	1		--	--	1	--	SPACE	28	--
--	29	SPACE	--	1			-- --	1	--	SPACE	30	--
			Total Load:		2.00 kVA		2.00 kVA			0.00 kVA		
			Total Amps:		16.7 A		16.7 A			0 A		

LOAD SUMMARY

DEMAND LOADS	DEMAND FACTOR	DEMAND VA	TOTALS
LONG CONT. LOAD	1.25	0 VA	
			TOTAL LOAD: 4000 VA
			TOTAL DEMAND LOAD: 4000 VA
			TOTAL CURRENT: 11.1 A
			TOTAL DEMAND CURRENT: 11.1 A

CIRCUIT KEY NOTES:

INVERTER — INV ALT-3

MOUNTING: SURFACE
ENCLOSURE: NEMA-1
FED FROM: B
LOCATION: ELECTRICAL ROOM - 124
FEED: ---

FULLY RATED RATED INVERTER

MAIN: 20A
VOLTS: 120V
PHASE: 1
WIRE: 2
BUS: ---
AIC/SCCR: 10KA

NOTES: MIN. 2.2KVA INVERTER 'INV', USE MYERS 1EM-3-S-B-A-20-6. PROVIDE UL924 LISTED SHUNT RELAY FOR EACH EMERGENCY CIRCUIT, USE MYERS-EPC-2-D

KEY	CKT NO.	LOAD DESCRIPTION	OCPD AMPS	P	A	OCPD P	AMPS	LOAD DESCRIPTION	CKT NO.	KEY
--	1	EMERGENCY LIGHTING-1	20 A	1	651 306 ⚠1	1	20 A	POOL DECK EMERGENCY LIGHTING	2	--
	3								4	
	5								6	
	7								8	
	9								10	
		Total Load:			0.96 kVA					
		Total Amps:			8 A ⚠1					

LOAD SUMMARY

DEMAND LOADS	DEMAND FACTOR	DEMAND VA	TOTALS
LONG CONT. LOAD	1.25	0 VA	
			TOTAL LOAD: 957 VA
			TOTAL DEMAND LOAD: 957 VA ⚠1
			TOTAL CURRENT: 8 A
			TOTAL DEMAND CURRENT: 8 A

CIRCUIT KEY NOTES:

REFER TO SINGLE LINE DIAGRAM AND POOL CONSULTANT DRAWING SHEET MR-7 FOR ELECTRICAL PANEL SP AND SP-1 REQUIREMENTS

PANEL SCHEDULE INDEX

PANEL A	PANEL B	PANEL D
PANEL EV	PANEL HVAC	PANEL C
	PANEL MS2	PANEL INV ALT-3 ⚠1

AGENCY

FLEWELLING & MOODY
architecture planning interiors

HEADQUARTERS OFFICE:
99 S. Lake Avenue, Suite 300
Pasadena, CA 91101
Phone: 323.543.8300
E-Mail: fm-pasadena@flewelling-moody.com

ANTELOPE VALLEY OFFICE:
1035 West Lancaster Bouldvard
Lancaster, California 93534
Phone: 661.949.0771
E-Mail: fm-lancaster@flewelling-moody.com

An Employee Owned Corporation

ARCHITECT

CONSULTANT

Budlong
An MBE|SBE|DBE|LSBE Firm
Glendale|Downtown LA|Fremont|Camarillo
W W W . B U D L O N G . C O M
Job No. 23-140

REGISTERED PROFESSIONAL ENGINEER MARIAN N. CHRISTIAN E 22864 ELECTRICAL STATE OF CALIFORNIA

Drawn by: Author
Check by: Checker

Revisions

No.	Date	Description
	01/26/24	100% DD
	03/01/24	50% CD
	05/09/24	90% CD
	08/05/24	100% CD
	11/25/24	100% CD V2
	01/31/25	100% CD V3
	12/17/24	PC CHANGES
1	08/27/2025	BID ALTERNATE

All dimensions must be checked at the job by the contractor who accepts full responsibility for their accuracy under the contract. These plans & the specifications in connection therewith have been prepared for a specific site. Any and all responsibility for their use in whole or in part on any other site is hereby disclaimed by Flewelling & Moody.

CITY OF RIDGECREST

SGT. JOHN PINNEY MEMORIAL POOL REPLACEMENT

205 S WARNER ST, RIDGECREST, CA 93555

Drawing Title

ELECTRICAL PANEL SCHEDULE ALT 3

Job No. 3055-0000
Date 08/07/2024
Sheet No. **E0.04A3**

PANEL A-ALT 6

MOUNTING: SURFACE
ENCLOSURE: NEMA-1
FED FROM: MS2
LOCATION: ELECTRICAL ROOM 108
FEED: BOTTOM FEED

MAIN BREAKER AIC RATING 42KA
BRANCH BREAKER AIC RATING 42KA
FULLY RATED RATED PANEL
BOLT ON BREAKERS

MAIN: 225A
VOLTS: 120/208 Wye
PHASE: 3
WIRE: 4
BUS: 225A
AIC/SCCR: 42KA

NOTES: ALL BRANCH CIRCUITS IN THE PANEL SHALL BE PROVIDED WITH CT SPACES FOR FUTURE BRANCH CIRCUIT MONITORING FOR LOAD DISAGGREGATION

KEY	CKT NO.	LOAD DESCRIPTION	OCPD AMPS	P	A	B	C	OCPD P	AMPS	LOAD DESCRIPTION	CKT NO.	KEY
	1	ENTRY/LOBBY RECP.	20 A	1	360	800		1	20 A	ENTRY LOBBY COMPUTER RECP.	2	
	3	HALLWAY RECP.	20 A	1			720 1000	1	20 A	DRINKING FOUNTAIN	4	
	5	ADMINISTRATION OFFICE	20 A	1			720 500	1	20 A	WATER HEATER POWER-1	6	
	7	WATER HEATER POWER-2	20 A	1	1000	180		1	20 A	ELECTRICAL ROOM RECEP.	8	
	9	EMPLOYEE RESTROOM	20 A	1		180	540	1	20 A	SICK BAY RECEP.	10	
	11	LIFE GUARD FACILITIES RECEP.	20 A	1			180 --	1	--	SPACE	12	--
--	13	SPACE	--	1	--	720		1	20 A	MENS RESTRM+SHOWER RECP.	14	
	15	SERVICE RECP.	20 A	1			720 1200	1	20 A	FRIDGE	16	
--	17	SPARE	20 A	1			0 1200	1	20 A	FREEZER	18	
	19	SCOREBOARD CIRCUIT-1	20 A	1	1200	1200		1	20 A	SCOREBOARD CIRCUIT-2	20	
	21	SCOREBOARD CIRCUIT-3	20 A	1			1200 360	1	20 A	ACID & CHLORINE STORAGE RECP.	22	
	23	SINK-1 DRYER(GFCI BRKR)	15 A	1			1200 1200	1	15 A	SINK-2 DRYER(GFCI BRKR)	24	
	25	HALLWAY RECP.-2	20 A	1	540	1100		1	20 A	REFRIGERATOR-1	26	
	27	LIFE GUARD FACILITIES RECEP.-1	20 A	1		1340	100	1	20 A	DUCT SMOKE DET.	28	1
1	29	FIRE ALARM CONTROL PANEL	20 A	1			100 1200	1	20 A	SCOREBOARD CIRCUIT-4	30	
	31	SCOREBOARD CIRCUIT-5	20 A	1	1200	1000		1	20 A	WATER HEATER POWER-3	32	
--	33	SPARE	20 A	1			0 1200	1	20 A	SCOREBOARD CIRCUIT-6	34	
	35	SCOREBOARD CIRCUIT-7	20 A	1			1200 540	1	20 A	POOL EQUIP. ROOM SERVICE RECEP.	36	
	37	BUILDING EXTERIOR RECEPTACLE	20 A	1	720	792		1	20 A	ACTIVITY POOL BOOSTER PUMP DISC.	38	
	39	CP-1	20 A	1		180	792	--	--	--	40	--
	41	ACTIVITY POOL CIRC PUMP DISC.	50 A	3			2903 792	--	--	--	42	--
--	43	--	--	--	2903	2003		3	40 A	INST. POOL CIRC PUMP DISC.	44	
--	45	--	--	--		2903	2003	--	--	--	46	--
	47	IRRIGATION CONTROLLER POWER	20 A	1			800 2003	--	--	--	48	--
	49	SPARE	20 A	1	0	180		1	20 A	JANITOR ROOM SERVICE RECEP.	50	
	51	WEST PARKING LOT RECEPTACLE	20 A	1		180	1200	1	15 A	SINK-3 DRYER(GFCI BRKR)	52	
	53	SINK-4 DRYER(GFCI BRKR)	15 A	1			1200 1200	1	15 A	SINK-5 DRYER(GFCI BRKR)	54	
	55	SINK-6 DRYER(GFCI BRKR)	15 A	1	1200	1200		1	15 A	SINK-7 DRYER(GFCI BRKR)	56	
	57	SINK-8 DRYER(GFCI BRKR)	15 A	1			1200 1200	1	15 A	SINK-9 DRYER(GFCI BRKR)	58	
	59	SINK-10 DRYER(GFCI BRKR)	15 A	1			1200 --	1	--	SPACE	60	--
--	61	SPACE	--	1	--	2000		1	20 A	FOOD WARMER	62	
	63	METERING PUMP 1	20 A	1			204 204	1	20 A	METERING PUMP 2	64	
	65	METERING PUMP 3	20 A	1			204 204	1	20 A	METERING PUMP 4	66	
	67	METERING PUMP 3	20 A	1	204	204		1	20 A	METERING PUMP 6	68	
	69	FOOD WARMER-2	20 A	1		2000	--	1	--	SPACE	70	--
--	71	SPACE	--	1			-- --	1	--	SPACE	72	--
		Total Load:			20.71 kVA		20.63 kVA			18.55 kVA		
		Total Amps:			172.6 A		171.9 A			154.6 A		

LOAD SUMMARY

DEMAND LOADS	DEMAND FACTOR	DEMAND VA
LONG CONT. LOAD	1.25	0 VA

TOTALS

TOTAL LOAD:	59878 VA
TOTAL DEMAND LOAD:	59878 VA
TOTAL CURRENT:	166.3 A
TOTAL DEMAND CURRENT:	166.4 A

CIRCUIT KEY NOTES:
1. BREAKER TO BE PROVIDED WITH LOCK ON DEVICE.

PANEL EV

MOUNTING: SURFACE
ENCLOSURE: NEMA-1
FED FROM: MS2
LOCATION: ELECTRICAL ROOM - 108
FEED: TOP FEED

MAIN BREAKER AIC RATING 42KA
BRANCH BREAKER AIC RATING 42KA
FULLY RATED RATED PANEL
BOLT ON BREAKERS

MAIN: 400A
VOLTS: 120/208 Wye
PHASE: 3
WIRE: 4
BUS: 400A
AIC/SCCR: 42KA

NOTES: ALL BRANCH CIRCUITS IN THE PANEL SHALL BE PROVIDED WITH CT SPACES FOR FUTURE BRANCH CIRCUIT MONITORING FOR LOAD DISAGGREGATION

KEY	CKT NO.	LOAD DESCRIPTION	OCPD AMPS	P	A	B	C	OCPD P	AMPS	LOAD DESCRIPTION	CKT NO.	KEY
	1	EV CHARGER-1	45 A	2	3600	3600		2	45 A	EV CHARGER-2, PORT-1	2	
--	3	--	--	--		3600	3600	--	--	--	4	--
	5	EV CHARGER-2, PORT-2	45 A	2			3600 3600	2	45 A	EV CAPABLE SPACE-1	6	
--	7	--	--	--	3600	3600		--	--	--	8	--
	9	EV CAPABLE SPACE-2	45 A	2		3600	3600	2	45 A	EV CAPABLE SPACE-3	10	
--	11	--	--	--			3600 3600	--	--	--	12	--
	13	EV CAPABLE SPACE-4	45 A	2	3600	3600		2	45 A	EV CAPABLE SPACE-5	14	
--	15	--	--	--		3600	3600	--	--	--	16	--
	17	EV CAPABLE SPACE-6	45 A	2			3600 3600	2	45 A	EV CAPABLE SPACE-7	18	
--	19	--	--	--	3600	3600		--	--	--	20	--
	21	EV CAPABLE SPACE-8	45 A	2		3600	3600	2	45 A	EV CAPABLE SPACE-9	22	
--	23	--	--	--			3600 3600	--	--	--	24	--
	25	EV CAPABLE SPACE-10	45 A	2	3600	--		1	--	SPACE	26	--
--	27	--	--	--		3600	--	1	--	SPACE	28	--
--	29	SPACE	--	1			-- --	1	--	SPACE	30	--
--	31	SPACE	--	1	--	--		1	--	SPACE	32	--
--	33	SPACE	--	1		--	--	1	--	SPACE	34	--
--	35	SPACE	--	1			-- --	1	--	SPACE	36	--
--	37	SPACE	--	1	--	--		1	--	SPACE	38	--
--	39	SPACE	--	1		--	--	1	--	SPACE	40	--
--	41	SPACE	--	1			-- --	1	--	SPACE	42	--
--	43	SPACE	--	1	--	--		1	--	SPACE	44	--
--	45	SPACE	--	1		--	--	1	--	SPACE	46	--
--	47	SPACE	--	1			-- --	1	--	SPACE	48	--
--	49	SPACE	--	1	--	--		1	--	SPACE	50	--
--	51	SPACE	--	1		--	--	1	--	SPACE	52	--
--	53	SPACE	--	1			-- --	1	--	SPACE	54	--
		Total Load:			31.82 kVA		31.95 kVA			28.55 kVA		
		Total Amps:			265.2 A		266.2 A			237.9 A		

LOAD SUMMARY

DEMAND LOADS	DEMAND FACTOR	DEMAND VA
LONG CONT. LOAD	1.25	23065 VA

TOTALS

TOTAL LOAD:	92315 VA
TOTAL DEMAND LOAD:	115380 VA
TOTAL CURRENT:	256.4 A
TOTAL DEMAND CURRENT:	320.6 A

CIRCUIT KEY NOTES:

PANEL B-ALT 6

MOUNTING: SURFACE
ENCLOSURE: NEMA-1
FED FROM:
LOCATION: ELECTRICAL ROOM 108
FEED: BOTTOM FEED

MAIN BREAKER AIC RATING 42KA
BRANCH BREAKER AIC RATING 42KA
FULLY RATED RATED PANEL
BOLT ON BREAKERS

MAIN: 200A
VOLTS: 120/208 Wye
PHASE: 3
WIRE: 4
BUS: 200A
AIC/SCCR: 22KA

NOTES: ALL BRANCH CIRCUITS IN THE PANEL SHALL BE PROVIDED WITH CT SPACES FOR FUTURE BRANCH CIRCUIT MONITORING FOR LOAD DISAGGREGATION

KEY	CKT NO.	LOAD DESCRIPTION	OCPD AMPS	P	A	B	C	OCPD P	AMPS	LOAD DESCRIPTION	CKT NO.	KEY
	1	INDOOR LIGHTING-1	20 A	1	1185	930		1	20 A	INDOOR LIGHTING-2	2	
	3	INDOOR LIGHTING-3	20 A	1			660 430	1	20 A	OUTDOOR LIGHTING-1	4	
	5	PARKING LOT LIGHTING-1	20 A	1			297 800	1	20 A	LIGHTING TOUCHSCREEN	6	
	7	LIGHTING CONTROLLER	20 A	1	800	800		1	20 A	LIGHTING CONTROL PANEL	8	
	9	SPORTS LIGHTING P1	15 A	2		700	700	2	15 A	SPORTS LIGHTING P2	10	
	11	--	--	--			700 700	--	--	--	12	
	13	SPORTS LIGHTING P3	15 A	2	700	700		2	15 A	SPORTS LIGHTING P5	14	
	15	--	--	--		700	700	--	--	--	16	
	17	SPORTS LIGHTING P4	15 A	2			700 700	2	15 A	SPORTS LIGHTING P6	18	
	19	--	--	--	700	700		--	--	--	20	
	21	INVERTER 'INV'	30 A	1		931	360	1	20 A	ACCESSIBLE RESTRM-1,2	22	
	23	SINK-12 DRYER(GFCI BRKR)	15 A	1			1200 1200	1	15 A	SINK-11 DRYER(GFCI BRKR)	24	
	25	WOMENS RESTRM+SHOWER RECP.	20 A	1	720	1200		1	20 A	SINK-13 DRYER(GFCI BRKR)	26	
	27	SINK-14 DRYER(GFCI BRKR)	20 A	1		1200	100	1	20 A	CSFD	28	
	29	SPARE	20 A	1			0 130	1	20 A	EXTERIOR LIGHTING ALT 6	30	
	31	SPARE	20 A	1	0	0		1	20 A	SPARE	32	
	33	SPACE	--	1		--	--	1	--	SPACE	34	
	35	SPACE	--	1			-- --	1	--	SPACE	36	
	37	SPACE	--	1	--	--		1	--	SPACE	38	
	39	SPACE	--	1		--	--	1	--	SPACE	40	
	41	SPACE	--	1			-- --	1	--	SPACE	42	
		Total Load:			8.44 kVA		6.48 kVA			6.43 kVA		
		Total Amps:			70.3 A		54 A			53.6 A		

LOAD SUMMARY

DEMAND LOADS	DEMAND FACTOR	DEMAND VA
LONG CONT. LOAD	1.25	3334

TOTALS

TOTAL LOAD:	21343 VA
TOTAL DEMAND LOAD:	24677 VA
TOTAL CURRENT:	59.3 A
TOTAL DEMAND CURRENT:	68.7 A

CIRCUIT KEY NOTES:

PANEL HVAC-ALT 6

MOUNTING: SURFACE
ENCLOSURE: NEMA-1
FED FROM:
LOCATION: ELECTRICAL ROOM - 108
FEED: BOTTOM FEED

MAIN BREAKER AIC RATING 42KA
BRANCH BREAKER AIC RATING 42KA
FULLY RATED RATED PANEL
BOLT ON BREAKERS

MAIN: 400A
VOLTS: 120/208 Wye
PHASE: 3
WIRE: 4
BUS: 400A
AIC/SCCR: 42KA

NOTES: ALL BRANCH CIRCUITS IN THE PANEL SHALL BE PROVIDED WITH CT SPACES FOR FUTURE BRANCH CIRCUIT MONITORING FOR LOAD DISAGGREGATION

KEY	CKT NO.	LOAD DESCRIPTION	OCPD AMPS	P	A	B	C	OCPD P	AMPS	LOAD DESCRIPTION	CKT NO.	KEY
	1	EF-6 & EF-7	20 A	1	1020	344		2	15 A	FCU-2,3,4	2	
	3	EF-5	20 A	2		800	344	--	--	--	4	
	5	--	--	--			800 593	2	15 A	FCU-1	6	
	7	HP-2	20 A	2	1560	593		--	--	--	8	
	9	--	--	--		1560	1020	1	20 A	EF-3 & EF-8	10	
	11	EF-1	20 A	2			800 510	1	20 A	EF-11	12	
	13	--	--	--	800	1768		2	25 A	HP-1	14	
	15	EF-2	20 A	1		510	1768	--	--	--	16	
	17	SF-1	20 A	2			800 433	2	20 A	FCU-3 & EF-4 CONTROL INTERFACE	18	
	19	--	--	--	800	433		--	--	--	20	
	21	DOAS-1	150 A	3		13882	4318	3	45 A	CU-1	22	
	23	--	--	--			13882 4318	--	--	--	24	
	25	--	--	--	13882	4318		--	--	--	26	
	27	EF-4 RELAY	20 A	1		510	0	1	20 A	SPARE	28	
	29	SPARE	20 A	1			0 0	1	20 A	SPARE	30	
	31	SPARE	20 A	1	0	1560		2	20 A	HP-3	32	
	33	SPARE	20 A	1		0	1560	--	--	--	34	
	35	ELECTRIC HEATER EH-1	30 A	2			2527 --	1	--	SPACE	36	
	37	--	--	--	2527	--		1	--	SPACE	38	
	39	SPACE	--	1		--	--	1	--	SPACE	40	
	41	SPACE	--	1				1	--	SPACE	42	
		Total Load:			29.61 kVA		26.27 kVA			24.86 kVA		
		Total Amps:			246.7 A		218.9 A			205.5 A		

LOAD SUMMARY

DEMAND LOADS	DEMAND FACTOR	DEMAND VA
LONG CONT. LOAD	1.25	0 VA
LARGEST MOTOR LOAD	1.25	10412

TOTALS

TOTAL LOAD:	80540 VA
TOTAL DEMAND LOAD:	90952 VA
TOTAL CURRENT:	223.7 A
TOTAL DEMAND CURRENT:	252.8 A

CIRCUIT KEY NOTES:

DIST. SECTION — MS2

MOUNTING: FLOOR STANDING
ENCLOSURE: NEMA-1
FED FROM: UTILITY POWER
LOCATION: ELECTRICAL ROOM - 118
FEED: BOTTOM

FULLY RATED PANEL

MAIN: 1600A
VOLTS: 120/208 Wye
PHASE: 3
WIRE: 4
AIC/SCCR: 65KA

ALL BRANCH CIRCUITS IN THE PANEL SHALL BE PROVIDED WITH CT SPACES FOR FUTURE BRANCH CIRCUIT MONITORING FOR LOAD DISAGGREGATION

KEY	CKT	LOAD DESCRIPTION	Load	BRKR RATING	BRKS POLES
	1	PANEL A	61.7 kVA	225 A	3
	2	PANEL B	21.72 kVA	200 A	3
	3	PANEL C	4 kVA	100 A	3
	4	PANEL D	54.37 kVA	400 A	3
	5	PANEL EV	92.26 kVA	400 A	3
	6	PANEL HVAC	94.56 kVA	400 A	3
	7	PANEL SP	38.29 kVA	200 A	3
	8	PANEL SP1	15.87 kVA	200 A	3
	9	COMPETITION POOL CIRC PUMP	21.37 kVA	125 A	3
	10	WH-3 POOL MECHANICAL EQUIP. ROOM	37.4 kVA	150 A	3
--	11	SPACE	--	--	3
--	12	SPACE	--	--	3
--	13	PV BACKFEED	0 kVA	125 A	3

TOTALS

TOTAL CONNECTED VA:	441251 VA
LARGEST MOTOR x1.25	15755 VA
TOTAL DEMAND LOAD VA:	457006 VA
TOTAL DEMAND AMPS:	1270 A

CIRCUIT KEYNOTES

1	
2	
3	

PANEL D

MOUNTING: SURFACE MOUNT
ENCLOSURE: NEMA-1
FED FROM: MS2
LOCATION: POOL EQUIPMENT STORAGE 134
FEED: BOTTOM FEED

MAIN BREAKER AIC RATING 22KA
BRANCH BREAKER AIC RATING 22KA
FULLY RATED RATED PANEL
BOLT ON BREAKERS

MAIN: 400A
VOLTS: 120/208 Wye
PHASE: 3
WIRE: 4
BUS: 400A
AIC/SCCR: 22KA

NOTES: ALL BRANCH CIRCUITS IN THE PANEL SHALL BE PROVIDED WITH CT SPACES FOR FUTURE BRANCH CIRCUIT MONITORING FOR LOAD DISAGGREGATION

KEY	CKT NO.	LOAD DESCRIPTION	OCPD AMPS	P	A	B	C	OCPD P	AMPS	LOAD DESCRIPTION	CKT NO.	KEY
	1	MOTORIZED DOOR-1	20 A	1	1200	1200		1	20 A	MOTORIZED DOOR-2	2	
	3	RESTROOMS-1,2	20 A	1			360 360	1	20 A	RESTROOMS-3,4	4	
	5	EF-9,10	20 A	2			590 --	1	--	SPACE	6	--
--	7	--	--	--	590	1080		1	20 A	RECP.	8	
	9	POOL EQUIP. STORAGE LIGHTING	20 A	1			629 325	1	20 A	POOL EQUIP. STORAGE OUTDOOR...	10	
	11	TIME CLOCK	20 A	1			800 1200	1	15 A	SINK-1 DRYER(GFCI BRKR)	12	
	13	WH-3	150 A	3	12467	1200		1	15 A	SINK-2 DRYER(GFCI BRKR)	14	
--	15	--	--	--		12467	1200	1	15 A	SINK-3 DRYER(GFCI BRKR)	16	
--	17	--	--	--			12467 1200	1	15 A	SINK-4 DRYER(GFCI BRKR)	18	
	19	ELECTRIC HEATER EH-2	30 A	2	2527	--		1	--	SPACE	20	--
--	21	--	--	--		2527	--	1	--	SPACE	22	--
--	23	SPACE	--	1			-- --	1	--	SPACE	24	--
--	25	SPACE	--	1	--	--		1	--	SPACE	26	--
--	27	SPACE	--	1		--	--	1	--	SPACE	28	--
--	29	SPACE	--	1			-- --	1	--	SPACE	30	--
--	31	SPACE	--	1	--	--		1	--	SPACE	32	--
--	33	SPACE	--	1		--	--	1	--	SPACE	34	--
--	35	SPACE	--	1			-- --	1	--	SPACE	36	--
--	37	SPACE	--	1	--	--		1	--	SPACE	38	--
--	39	SPACE	--	1		--	--	1	--	SPACE	40	--
--	41	SPACE	--	1			-- --	1	--	SPACE	42	--
		Total Load:			20.26 kVA		17.85 kVA			16.26 kVA		
		Total Amps:			168.9 A		148.8 A			135.5 A		

LOAD SUMMARY

DEMAND LOADS	DEMAND FACTOR	DEMAND VA
LONG CONT. LOAD	1.25	237 VA

TOTALS

TOTAL LOAD:	54373 VA
TOTAL DEMAND LOAD:	54611 VA
TOTAL CURRENT:	151 A
TOTAL DEMAND CURRENT:	151.8 A

CIRCUIT KEY NOTES:

PANEL C

MOUNTING: SURFACE
ENCLOSURE: NEMA-1
FED FROM: MS2
LOCATION: JANITORIAL - 109
FEED: BOTTOM FEED

MAIN BREAKER AIC RATING 22KA
BRANCH BREAKER AIC RATING 22KA
FULLY RATED RATED PANEL
BOLT ON BREAKERS

MAIN: 100A
VOLTS: 120/208 Wye
PHASE: 3
WIRE: 4
BUS: 200A
AIC/SCCR: 22KA

NOTES:

KEY	CKT NO.	LOAD DESCRIPTION	OCPD AMPS	P	A	B	C	OCPD P	AMPS	LOAD DESCRIPTION	CKT NO.	KEY
	1	LV UTILITY POWER SUPPLY	20 A	1	1000	1000		1	20 A	LV RACK RECP-1	2	
	3	LV RACK RECP-2	20 A	1		1000	1000	1	20 A	LV RACK RECP-3	4	
--	5	SPACE	--	1			-- --	1	--	SPACE	6	--
--	7	SPACE	--	1	--	--		1	--	SPACE	8	--
--	9	SPACE	--	1		--	--	1	--	SPACE	10	--
--	11	SPACE	--	1			-- --	1	--	SPACE	12	--
--	13	SPACE	--	1	--	--		1	--	SPACE	14	--
--	15	SPACE	--	1		--	--	1	--	SPACE	16	--
--	17	SPACE	--	1			-- --	1	--	SPACE	18	--
--	19	SPACE	--	1	--	--		1	--	SPACE	20	--
--	21	SPACE	--	1		--	--	1	--	SPACE	22	--
--	23	SPACE	--	1			-- --	1	--	SPACE	24	--
--	25	SPACE	--	1	--	--		1	--	SPACE	26	--
--	27	SPACE	--	1		--	--	1	--	SPACE	28	--
--	29	SPACE	--	1			-- --	1	--	SPACE	30	--
		Total Load:			2.00 kVA		2.00 kVA			0.00 kVA		
		Total Amps:			16.7 A		16.7 A			0 A		

LOAD SUMMARY

DEMAND LOADS	DEMAND FACTOR	DEMAND VA
LONG CONT. LOAD	1.25	0 VA

TOTALS

TOTAL LOAD:	4000 VA
TOTAL DEMAND LOAD:	4000 VA
TOTAL CURRENT:	11.1 A
TOTAL DEMAND CURRENT:	11.1 A

CIRCUIT KEY NOTES:

INVERTER — INV-ALT 6

MOUNTING: SURFACE
ENCLOSURE: NEMA-1
FED FROM: B
LOCATION: ELECTRICAL ROOM - 108
FEED: ---

FULLY RATED RATED INVERTER

MAIN: 20A
VOLTS: 120V
PHASE: 1
WIRE: 2
BUS: ---
AIC/SCCR: 10KA

NOTES: MIN. 2.2KVA INVERTER 'INV', USE MYERS 1EM-3-S-B-A-20-6. PROVIDE UL924 LISTED SHUNT RELAY FOR EACH EMERGENCY CIRCUIT, USE MYERS-EPC-2-D

KEY	CKT NO.	LOAD DESCRIPTION	OCPD AMPS	P	A	B	OCPD P	AMPS	LOAD DESCRIPTION	CKT NO.	KEY
--	1	EMERGENCY LIGHTING-1	20 A	1	555	280	1	20 A	POOL DECK EMERGENCY LIGHTING	2	--
	3									4	
	5									6	
	7									8	
	9									10	
		Total Load:			0.84 kVA						
		Total Amps:			7 A						

LOAD SUMMARY

DEMAND LOADS	DEMAND FACTOR	DEMAND VA
LONG CONT. LOAD	1.25	0 VA

TOTALS

TOTAL LOAD:	835 VA
TOTAL DEMAND LOAD:	835 VA
TOTAL CURRENT:	7 A
TOTAL DEMAND CURRENT:	7 A

CIRCUIT KEY NOTES:

REFER TO SINGLE LINE DIAGRAM AND POOL CONSULTANT DRAWING SHEET MR-7 FOR ELECTRICAL PANEL SP AND SP-1 REQUIREMENTS

PANEL SCHEDULE INDEX

PANEL A ALT 6	PANEL B	PANEL D
PANEL EV	PANEL HVAC	PANEL C
	PANEL MS2	PANEL INV-ALT 6

AGENCY

FLEWELLING & MOODY
architecture planning interiors

HEADQUARTERS OFFICE:
99 S. Lake Avenue, Suite 300
Pasadena, CA 91101
Phone: 323.543.8300
E-Mail: fm-pasadena@flewelling-moody.com

ANTELOPE VALLEY OFFICE:
1035 West Lancaster Bouldvard
Lancaster, California 93534
Phone: 661.949.0771
E-Mail: fm-lancaster@flewelling-moody.com

An Employee Owned Corporation

ARCHITECT

CONSULTANT

Budlong
An MBE|SBE|DBE|LSBE Firm
Glendale|Downtown LA|Fremont|Camarillo
W W W . B U D L O N G . C O M
Job No. 23-140

REGISTERED PROFESSIONAL ENGINEER MANAN H. CHRISTIAN E 22864 ELECTRICAL STATE OF CALIFORNIA

Drawn by: Author
Check by: Checker

Revisions

No.	Date	Description
	01/26/24	100% DD
	03/01/24	50% CD
	05/09/24	90% CD
	08/05/24	100% CD
	11/25/24	100% CD V2
	01/31/25	100% CD V3
	12/17/24	PC CHANGES
1	08/27/2025	BID ALTERNATE

All dimensions must be checked at the job by the contractor who accepts full responsibility for their accuracy under the contract. These plans & the specifications in connection therewith have been prepared for a specific site. Any and all responsibility for their use in whole or in part on any other site is hereby disclaimed by Flewelling & Moody.

CITY OF RIDGECREST

SGT. JOHN PINNEY MEMORIAL POOL REPLACEMENT

205 S WARNER ST, RIDGECREST, CA 93555

Drawing Title

ELECTRICAL PANEL SCHEDULE ALT 6

Job No. 3055-0000

Sheet No. E0.04A6

Date 08/07/2024

PANEL A

MOUNTING: SURFACE
ENCLOSURE: NEMA-1
FED FROM: MS2
LOCATION: ELECTRICAL ROOM -108
FEED: BOTTOM FEED

MAIN BREAKER AIC RATING 42KA
BRANCH BREAKER AIC RATING 42KA
FULLY RATED RATED PANEL
BOLT ON BREAKERS

MAIN: 225A
VOLTS: 120/208 Wye
PHASE: 3
WIRE: 4
BUS: 225A
AIC/SCCR: 42KA

NOTES: ALL BRANCH CIRCUITS IN THE PANEL SHALL BE PROVIDED WITH CT SPACES FOR FUTURE BRANCH CIRCUIT MONITORING FOR LOAD DISAGGREGATION

KEY	CKT NO.	LOAD DESCRIPTION	OCPD AMPS	P	A	B	C	OCPD P	AMPS	LOAD DESCRIPTION	CKT NO.	KEY
	1	ENTRY/LOBBY RECP.	20 A	1	360			1	20 A	ENTRY LOBBY COMPUTER RECP.	2	
	3	HALLWAY RECP.	20 A	1		720		1	20 A	DRINKING FOUNTAIN	4	
	5	ADMINISTRATION OFFICE	20 A	1			720	1	20 A	WATER HEATER POWER-1	6	
	7	WATER HEATER POWER-2	20 A	1	1000			1	20 A	ELECTRICAL ROOM RECEP.	8	
	9	EMPLOYEE RESTROOM	20 A	1		180		1	20 A	SICK BAY RECEP.	10	
	11	LIFE GUARD FACILITIES RECEP.	20 A	1			180	1	--	SPACE	12	--
--	13	SPACE	--	1	--	720		1	20 A	MENS RESTRM+SHOWER RECP.	14	
	15	SERVICE RECP.	20 A	1		720	1200	1	20 A	FRIDGE	16	
	17	COMMUNITY ROOM RECP-1	20 A	1			1120	1200	1	20 A	FREEZER	18	
	19	SCOREBOARD CIRCUIT-1	20 A	1	1200	1200		1	20 A	SCOREBOARD CIRCUIT-2	20	
	21	SCOREBOARD CIRCUIT-3	20 A	1		1200	360	1	20 A	ACID & CHLORINE STORAGE RECP.	22	
	23	SINK-1 DRYER(GFCI BRKR)	15 A	1			1200	1200	1	15 A	SINK-2 DRYER(GFCI BRKR)	24	
	25	HALLWAY RECP.-2	20 A	1	540	1100		1	20 A	REFRIGERATOR-1	26	
	27	LIFE GUARD FACILITIES RECEP.-1	20 A	1		1340	100	1	20 A	DUCT SMOKE DET.	28	1
1	29	FIRE ALARM CONTROL PANEL	20 A	1			100	1200	1	20 A	SCOREBOARD CIRCUIT-4	30	
	31	SCOREBOARD CIRCUIT-5	20 A	1	1200	1000					32	
1	33	MOOTORIZED DAMPER POWER SUPPLY	20 A	1		600	1200	1	20 A	SCOREBOARD CIRCUIT-6	34	
	35	SCOREBOARD CIRCUIT-7	20 A	1			1200	540	1	20 A	POOL EQUIP. ROOM SERVICE RECEP.	36	
	37	BUILDING EXTERIOR RECEPTACLE	20 A	1	720	792		3	20 A	ACTIVITY POOL BOOSTER PUMP DISC.	38	
	39	CP-1	20 A	1		180	792	--	--	--	40	--
	41	ACTIVITY POOL CIRC PUMP DISC.	50 A	3			2903	792	--	--	42	--
--	43	--	--	--	2903	2003		3	40 A	INST. POOL CIRC PUMP DISC.	44	
--	45	--	--	--		2903	2003	--	--	--	46	--
	47	IRRIGATION CONTROLLER POWER	20 A	1			800	2003	--	--	48	--
	49	CO2 SENSOR	20 A	1	100	180		1	20 A	JANITOR ROOM SERVICE RECEP.	50	
	51	WEST PARKING LOT RECEPTACLE	20 A	1		180	1200	1	15 A	SINK-3 DRYER(GFCI BRKR)	52	
	53	SINK-4 DRYER(GFCI BRKR)	15 A	1			1200	1200	1	15 A	SINK-5 DRYER(GFCI BRKR)	54	
	55	SINK-6 DRYER(GFCI BRKR)	15 A	1	1200	1200		1	15 A	SINK-7 DRYER(GFCI BRKR)	56	
	57	SINK-8 DRYER(GFCI BRKR)	15 A	1		1200	1200	1	15 A	SINK-9 DRYER(GFCI BRKR)	58	
	59	SINK-10 DRYER(GFCI BRKR)	15 A	1			1200	--	1	--	SPACE	60	--
--	61	SPACE	--	1	--	2000		1	20 A	FOOD WARMER	62	
	63	METERING PUMP 1	20 A	1		204	204	1	20 A	METERING PUMP 2	64	
	65	METERING PUMP 3	20 A	1			204	204	1	20 A	METERING PUMP 4	66	
	67	METERING PUMP 5	20 A	1	204	204		1	20 A	METERING PUMP 6	68	
	69	FOOD WARMER-2	20 A	1		2000	--	1	--	SPACE	70	--
--	71	SPACE	--	1			--	--	1	--	SPACE	72	--
			Total Load:		20.81 kVA		21.23 kVA			19.67 kVA		
			Total Amps:		173.4 A		176.9 A			163.9 A		

LOAD SUMMARY

DEMAND LOADS	DEMAND FACTOR	DEMAND VA	TOTALS
LONG CONT. LOAD	1.25	0 VA	
			TOTAL LOAD: 61696 VA
			TOTAL DEMAND LOAD: 61696 VA
			TOTAL CURRENT: 171.4 A
			TOTAL DEMAND CURRENT: 171.5 A

CIRCUIT KEY NOTES:
1. BREAKER TO BE PROVIDED ON LOCK ON DEVICE.

PANEL EV

MOUNTING: SURFACE
ENCLOSURE: NEMA-1
FED FROM: MS2
LOCATION: ELECTRICAL ROOM - 108
FEED: TOP FEED

MAIN BREAKER AIC RATING 42KA
BRANCH BREAKER AIC RATING 42KA
FULLY RATED RATED PANEL
BOLT ON BREAKERS

MAIN: 400A
VOLTS: 120/208 Wye
PHASE: 3
WIRE: 4
BUS: 400A
AIC/SCCR: 42KA

NOTES: ALL BRANCH CIRCUITS IN THE PANEL SHALL BE PROVIDED WITH CT SPACES FOR FUTURE BRANCH CIRCUIT MONITORING FOR LOAD DISAGGREGATION

KEY	CKT NO.	LOAD DESCRIPTION	OCPD AMPS	P	A	B	C	OCPD P	AMPS	LOAD DESCRIPTION	CKT NO.	KEY
	1	EV CHARGER-1	45 A	2	3600	3600		2	45 A	EV CHARGER-2, PORT-1	2	
--	3	--	--	--		3600	3600	--	--	--	4	--
	5	EV CHARGER-2, PORT-2	45 A	2			3600	3600	2	45 A	EV CAPABLE SPACE-1	6	
--	7	--	--	--	3600	3600				--	--	--	8	--
	9	EV CAPABLE SPACE-2	45 A	2			3600	3600	2	45 A	EV CAPABLE SPACE-3	10	
--	11	--	--	--			3600	3600	--	--	--	12	--
	13	EV CAPABLE SPACE-4	45 A	2	3600	3600			2	45 A	EV CAPABLE SPACE-5	14	
--	15	--	--	--		3600	3600		--	--	--	16	--
	17	EV CAPABLE SPACE-6	45 A	2			3600	3600	2	45 A	EV CAPABLE SPACE-7	18	
--	19	--	--	--	3600	3600				--	--	--	20	--
	21	EV CAPABLE SPACE-8	45 A	2		3600	3600		2	45 A	EV CAPABLE SPACE-9	22	
--	23	--	--	--			3600	3600	--	--	--	24	--
	25	EV CAPABLE SPACE-10	45 A	2	3600	--			1	--	SPACE	26	--
--	27	--	--	--		3600	--		1	--	SPACE	28	--
--	29	SPACE	--	1				--	--	1	--	SPACE	30	--
--	31	SPACE	--	1	--	--				1	--	SPACE	32	--
--	33	SPACE	--	1			--	--		1	--	SPACE	34	--
--	35	SPACE	--	1			--	--		1	--	SPACE	36	--
--	37	SPACE	--	1	--	--				1	--	SPACE	38	--
--	39	SPACE	--	1			--	--		1	--	SPACE	40	--
--	41	SPACE	--	1			--	--		1	--	SPACE	42	--
--	43	SPACE	--	1	--	--				1	--	SPACE	44	--
--	45	SPACE	--	1			--	--		1	--	SPACE	46	--
--	47	SPACE	--	1			--	--		1	--	SPACE	48	--
--	49	SPACE	--	1	--	--				1	--	SPACE	50	--
--	51	SPACE	--	1			--	--		1	--	SPACE	52	--
--	53	SPACE	--	1			--	--		1	--	SPACE	54	--
			Total Load:		31.82 kVA		31.95 kVA			28.55 kVA		
			Total Amps:		265.2 A		266.2 A			237.9 A		

LOAD SUMMARY

DEMAND LOADS	DEMAND FACTOR	DEMAND VA	TOTALS
LONG CONT. LOAD	1.25	23065 VA	
			TOTAL LOAD: 92315 VA
			TOTAL DEMAND LOAD: 115380 VA
			TOTAL CURRENT: 256.4 A
			TOTAL DEMAND CURRENT: 320.6 A

CIRCUIT KEY NOTES:

PANEL B-ALT 7

MOUNTING: SURFACE
ENCLOSURE: NEMA-1
FED FROM:
LOCATION: ELECTRICAL ROOM 108
FEED: BOTTOM FEED

MAIN BREAKER AIC RATING 42KA
BRANCH BREAKER AIC RATING 42KA
FULLY RATED RATED PANEL
BOLT ON BREAKERS

MAIN: 200A
VOLTS: 120/208 Wye
PHASE: 3
WIRE: 4
BUS: 200A
AIC/SCCR: 22KA

NOTES: ALL BRANCH CIRCUITS IN THE PANEL SHALL BE PROVIDED WITH CT SPACES FOR FUTURE BRANCH CIRCUIT MONITORING FOR LOAD DISAGGREGATION

KEY	CKT NO.	LOAD DESCRIPTION	OCPD AMPS	P	A	B	C	OCPD P	AMPS	LOAD DESCRIPTION	CKT NO.	KEY
	1	INDOOR LIGHTING-1	20 A	1	1185	930		1	20 A	INDOOR LIGHTING-2	2	
	3	INDOOR LIGHTING-3	20 A	1			1175	430	1	20 A	OUTDOOR LIGHTING-1	4	
	5	PARKING LOT LIGHTING-1	20 A	1				297	800	1	20 A	LIGHTING TOUCHSCREEN	6	
	7	LIGHTING CONTROLLER	20 A	1	800	800				1	20 A	LIGHTING CONTROL PANEL	8	
	9	SPORTS LIGHTING P1	20 A	2			700	700		2	20 A	SPORTS LIGHTING P2	10	
	11	--	--	--					700	700	--	--	--	12	
	13	SPORTS LIGHTING P3	20 A	2	700	700				2	20 A	SPORTS LIGHTING P5	14	
	15	--	--	--			700	700			--	--	--	16	
	17	SPORTS LIGHTING P4	20 A	2					700	700	2	20 A	SPORTS LIGHTING P6	18	
	19	--	--	--	700	700					--	--	--	20	
	21	INVERTER 'INV'	20 A	1			931	360			1	20 A	ACCESSIBLE RESTRM-1,2	22	
	23	SINK-12 DRYER(GFCI BRKR)	20 A	1					1200	1200	1	20 A	SINK-11 DRYER(GFCI BRKR)	24	
	25	WOMENS RESTRM+SHOWER RECP.	20 A	1	720	1200					1	20 A	SINK-13 DRYER(GFCI BRKR)	26	
	27	SINK-14 DRYER(GFCI BRKR)	20 A	1			1200	100			1	20 A	CSFD	28	
1	28	EXTERIOR LIGHTING ALT7	20 A	1					55	0	1	20 A	SPARE	30	
	31	SPARE	20 A	1	0	0					1	20 A	SPARE	32	
	33	SPACE	--	1			--	--			1	--	SPACE	34	
	35	SPACE	--	1					--	--	1	--	SPACE	36	
	37	SPACE	--	1	--	--					1	--	SPACE	38	
	39	SPACE	--	1			--	--			1	--	SPACE	40	
	41	SPACE	--	1					--	--	1	--	SPACE	42	
			Total Load:		8.44 kVA		7.00 kVA			6.35 kVA		
			Total Amps:		70.3 A		58.3 A			52.9 A		

LOAD SUMMARY

DEMAND LOADS	DEMAND FACTOR	DEMAND VA	TOTALS
LONG CONT. LOAD	1.25	3334	
			TOTAL LOAD: 21783 VA
			TOTAL DEMAND LOAD: 25117 VA
			TOTAL CURRENT: 60.5 A
			TOTAL DEMAND CURRENT: 69.9 A

CIRCUIT KEY NOTES:

PANEL HVAC

MOUNTING: SURFACE
ENCLOSURE: NEMA-1
FED FROM: MS2
LOCATION: ELECTRICAL ROOM - 108
FEED: BOTTOM FEED

MAIN BREAKER AIC RATING 42KA
BRANCH BREAKER AIC RATING 42KA
FULLY RATED RATED PANEL
BOLT ON BREAKERS

MAIN: 400A
VOLTS: 120/208 Wye
PHASE: 3
WIRE: 4
BUS: 400A
AIC/SCCR: 42KA

NOTES: ALL BRANCH CIRCUITS IN THE PANEL SHALL BE PROVIDED WITH CT SPACES FOR FUTURE BRANCH CIRCUIT MONITORING FOR LOAD DISAGGREGATION

KEY	CKT NO.	LOAD DESCRIPTION	OCPD AMPS	P	A	B	C	OCPD P	AMPS	LOAD DESCRIPTION	CKT NO.	KEY
	1	EF-6 & EF-7	20 A	1	1020	344		2	15 A	FCU-2,3,4	2	
	3	EF-5	20 A	2		800	344	--	--	--	4	--
--	5	--	--	--			800	593	2	15 A	FCU-1	6	
	7	HP-2	20 A	2	1560	593			--	--	--	8	--
--	9	--	--	--		1560	1020		1	20 A	EF-3 & EF-8	10	
	11	EF-1	20 A	2			800	510	1	20 A	EF-11	12	
--	13	--	--	--	800	1768			2	25 A	HP-1	14	
	15	EF-2	20 A	1		510	1768		--	--	--	16	--
	17	SF-1	20 A	2			800	433	2	20 A	FCU-3 & EF-4 CONTROL INTERFACE	18	
--	19	--	--	--	800	433			--	--	--	20	--
	21	DOAS-1	150 A	3		13882	4318		3	45 A	CU-1	22	
--	23	--	--	--			13882	4318	--	--	--	24	--
--	25	--	--	--	13882	4318			--	--	--	26	--
	27	EF-4 RELAY	20 A	1		510	481		2	15 A	FCU-5,6	28	
	29	CU-2	45 A	3			4354	481	--	--	--	30	--
--	31	--	--	--	4354	1560			2	20 A	HP-3	32	
--	33	--	--	--		4354	1560		--	--	--	34	--
	35	ELECTRIC HEATER EH-1	30 A	2				2527	--	1	--	SPACE	36	--
--	37	--	--	--	2527	--				1	--	SPACE	38	--
--	39	SPACE	--	1			--	--		1	--	SPACE	40	--
--	41	SPACE	--	1					--	--	1	--	SPACE	42	--
			Total Load:		33.96 kVA		31.11 kVA			29.50 kVA		
			Total Amps:		283 A		259.2 A			245.8 A		

LOAD SUMMARY

DEMAND LOADS	DEMAND FACTOR	DEMAND VA	TOTALS
LONG CONT. LOAD	1.25	0 VA	
LARGEST MOTOR LOAD	1.25	10412 VA	
			TOTAL LOAD: 94564 VA
			TOTAL DEMAND LOAD: 104976 VA
			TOTAL CURRENT: 262.7 A
			TOTAL DEMAND CURRENT: 291.7 A

CIRCUIT KEY NOTES:

DIST. SECTION — MS2-ALT 7

MOUNTING: FLOOR STANDING
ENCLOSURE: NEMA-1
FED FROM: UTILITY POWER
LOCATION: ELECTRICAL ROOM - 118
FEED: BOTTOM

FULLY RATED PANEL

MAIN: 1600A
VOLTS: 120/208 Wye
PHASE: 3
WIRE: 4
AIC/SCCR: 65KA

ALL BRANCH CIRCUITS IN THE PANEL SHALL BE PROVIDED WITH CT SPACES FOR FUTURE BRANCH CIRCUIT MONITORING FOR LOAD DISAGGREGATION

KEY	CKT	LOAD DESCRIPTION	Load	BRKR RATING	BRKS POLES
--	1	PANEL A	61.7 kVA	225 A	3
--	2	PANEL B	21.72 kVA	200 A	3
--	3	PANEL HVAC	94.56 kVA	400 A	3
--	4	SPARE(FUTURE BUILDING PANEL D)	0 kVA	400 A	3
--	5	PANEL EV	92.26 kVA	400 A	3
--	6	PANEL HVAC	94.56 kVA	400 A	3
--	7	PANEL SP	38.29 kVA	200 A	3
--	8	PANEL SP1	15.87 kVA	200 A	3
--	9	COMPETITION POOL CIRC PUMP	21.37 kVA	125 A	3
--	10	WH-3 POOL MECHANICAL EQUIP. ROOM	37.4 kVA	150 A	3
--	11	SPACE	--	--	3
--	12	SPACE	--	--	3
--	13	PV BACKFEED	0 kVA	125 A	3

TOTALS

TOTAL CONNECTED VA:	387170 VA
LARGEST MOTOR x1.25:	15755
TOTAL DEMAND LOAD VA:	402925 VA
TOTAL DEMAND AMPS:	1119.7 A

CIRCUIT KEYNOTES

1	
2	
3	

PANEL C

MOUNTING: SURFACE
ENCLOSURE: NEMA-1
FED FROM: MS2
LOCATION: JANITORIAL - 109
FEED: BOTTOM FEED

MAIN BREAKER AIC RATING 22KA
BRANCH BREAKER AIC RATING 22KA
FULLY RATED RATED PANEL
BOLT ON BREAKERS

MAIN: 100A
VOLTS: 120/208 Wye
PHASE: 3
WIRE: 4
BUS: 200A
AIC/SCCR: 22KA

NOTES:

KEY	CKT NO.	LOAD DESCRIPTION	OCPD AMPS	P	A	B	C	OCPD P	AMPS	LOAD DESCRIPTION	CKT NO.	KEY
	1	LV UTILITY POWER SUPPLY	20 A	1	1000	1000		1	20 A	LV RACK RECP-1	2	
	3	LV RACK RECP-2	20 A	1		1000	1000	1	20 A	LV RACK RECP-3	4	
--	5	SPACE	--	1				--	--	1	--	SPACE	6	--
--	7	SPACE	--	1	--	--				1	--	SPACE	8	--
--	9	SPACE	--	1			--	--		1	--	SPACE	10	--
--	11	SPACE	--	1			--	--		1	--	SPACE	12	--
--	13	SPACE	--	1	--	--				1	--	SPACE	14	--
--	15	SPACE	--	1			--	--		1	--	SPACE	16	--
--	17	SPACE	--	1			--	--		1	--	SPACE	18	--
--	19	SPACE	--	1	--	--				1	--	SPACE	20	--
--	21	SPACE	--	1			--	--		1	--	SPACE	22	--
--	23	SPACE	--	1				--	--	1	--	SPACE	24	--
--	25	SPACE	--	1	--	--				1	--	SPACE	26	--
--	27	SPACE	--	1			--	--		1	--	SPACE	28	--
--	29	SPACE	--	1				--	--	1	--	SPACE	30	--
			Total Load:		2.00 kVA		2.00 kVA			0.00 kVA		
			Total Amps:		16.7 A		16.7 A			0 A		

LOAD SUMMARY

DEMAND LOADS	DEMAND FACTOR	DEMAND VA	TOTALS
LONG CONT. LOAD	1.25	0 VA	
			TOTAL LOAD: 4000 VA
			TOTAL DEMAND LOAD: 4000 VA
			TOTAL CURRENT: 11.1 A
			TOTAL DEMAND CURRENT: 11.1 A

CIRCUIT KEY NOTES:

INVERTER — INV-ALT 7

MOUNTING: SURFACE
ENCLOSURE: NEMA-1
FED FROM:
LOCATION: ELECTRICAL ROOM - 108
FEED: ---

FULLY RATED RATED INVERTER

MAIN: 20A
VOLTS: 120V
PHASE: 1
WIRE: 2
BUS: ---
AIC/SCCR: 10KA

NOTES: MIN. 2.2KVA INVERTER 'INV', USE MYERS 1EM-3-S-B-A-20-6. PROVIDE UL924 LISTED SHUNT RELAY FOR EACH EMERGENCY CIRCUIT, USE MYERS-EPC-2-D

KEY	CKT NO.	LOAD DESCRIPTION	OCPD AMPS	P	A		OCPD P	AMPS	LOAD DESCRIPTION	CKT NO.	KEY
--	1	EMERGENCY LIGHTING-1	20 A	1	651	280	1	20 A	POOL DECK EMERGENCY LIGHTING	2	--
--	3	EMERGENCY EXTERIOR LIGHTING ALT 7	20 A	1	22					4	
	5									6	
	7									8	
	9									10	
			Total Load:		0.95 kVA						
			Total Amps:		7.9 A						

LOAD SUMMARY

DEMAND LOADS	DEMAND FACTOR	DEMAND VA	TOTALS
LONG CONT. LOAD	1.25	0 VA	
			TOTAL LOAD: 953 VA
			TOTAL DEMAND LOAD: 953 VA
			TOTAL CURRENT: 7.9 A
			TOTAL DEMAND CURRENT: 7.9 A

CIRCUIT KEY NOTES:

REFER TO SINGLE LINE DIAGRAM AND POOL CONSULTANT DRAWING SHEET MR-7 FOR ELECTRICAL PANEL SP AND SP-1 REQUIREMENTS

PANEL SCHEDULE INDEX

PANEL A	PANEL B ALT 7	
PANEL EV	PANEL HVAC	PANEL C
	PANEL MS2-ALT 7	PANEL INV-ALT 7

AGENCY

FLEWELLING & MOODY
architecture planning interiors

HEADQUARTERS OFFICE:
99 S. Lake Avenue, Suite 300
Pasadena, CA 91101
Phone: 323.543.8300
E-Mail: fm-pasadena@flewelling-moody.com

ANTELOPE VALLEY OFFICE:
1035 West Lancaster Bouldvard
Lancaster, California 93534
Phone: 661.949.0771
E-Mail: fm-lancaster@flewelling-moody.com

An Employee Owned Corporation

ARCHITECT

CONSULTANT

Budlong
An MBE|SBE|DBE|LSBE Firm
Glendale|Downtown LA|Fremont|Camarillo
W W W . B U D L O N G . C O M
Job No. 23-140

REGISTERED PROFESSIONAL ENGINEER MANAV N. CHRISTIAN E 22864 ELECTRICAL STATE OF CALIFORNIA

Drawn by: Author
Check by: Checker

Revisions

No.	Date	Description
	01/26/24	100% DD
	03/01/24	50% CD
	05/09/24	90% CD
	08/05/24	100% CD
	11/25/24	100% CD V2
	01/31/25	100% CD V3
	12/17/24	PC CHANGES
1	08/27/2025	BID ALTERNATE

All dimensions must be checked at the job by the contractor who accepts full responsibility for their accuracy under the contract. These plans & the specifications in connection therewith have been prepared for a specific site. Any and all responsibility for their use in whole or in part on any other site is hereby disclaimed by Flewelling & Moody.

CITY OF RIDGECREST

SGT. JOHN PINNEY MEMORIAL POOL REPLACEMENT

205 S WARNER ST, RIDGECREST, CA 93555

Drawing Title

ELECTRICAL PANEL SCHEDULE ALT 7

Job No. 3055-0000

Sheet No. E0.04A7

Date 08/07/2024

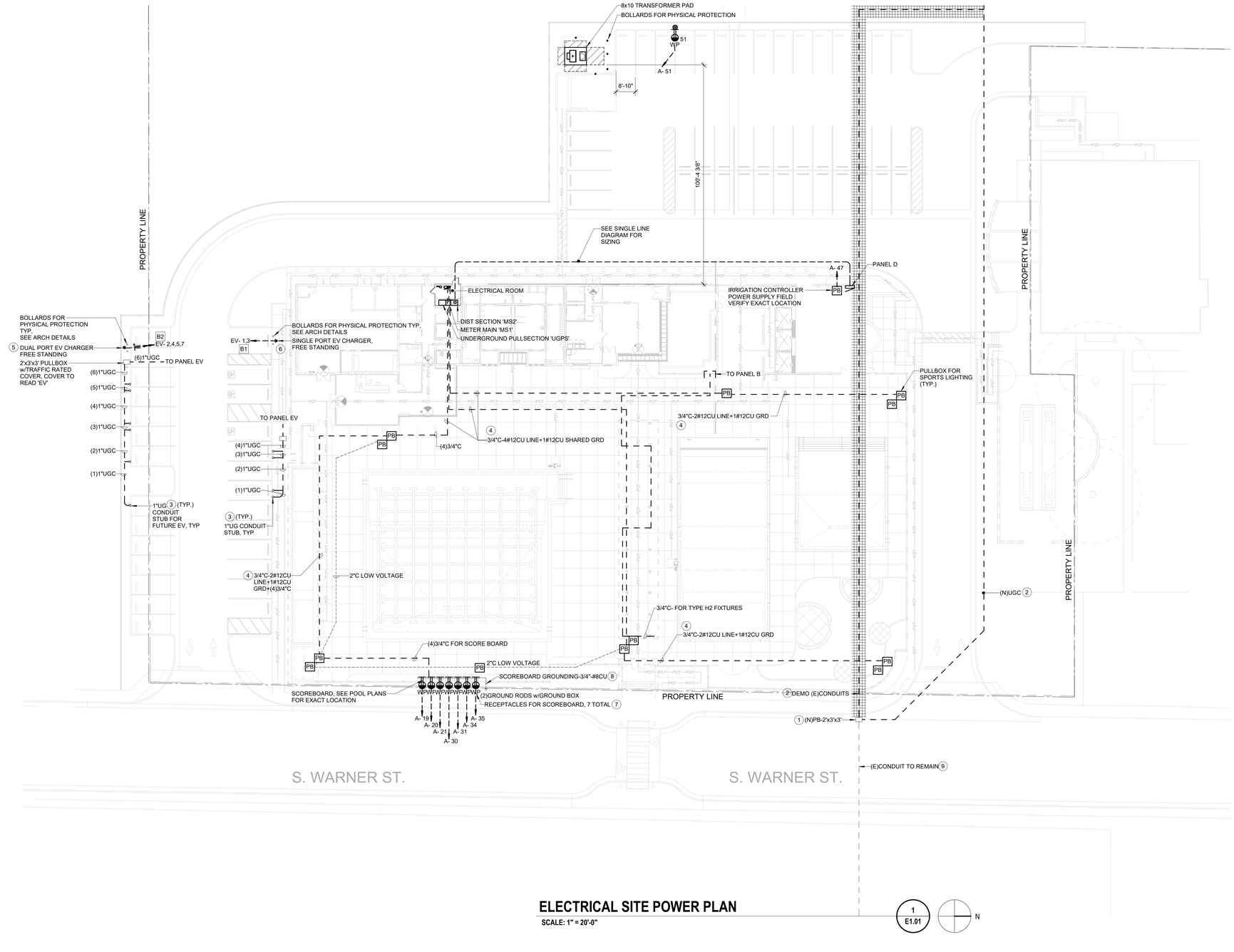

ELECTRICAL SITE POWER PLAN

SCALE: 1" = 20'-0"

1 / E1.01

N

GENERAL NOTES

1. EMERGENCY LIGHTING TO BE PROVIDED IN CONDUITS/RACEWAYS AND CANT BE MIXED WITH NORMAL LIGHTING IN THE SAME CONDUIT OR RACEWAY
2. ALL ELECTRIC EQ. INSTALLED OUTDOORS INCLUDING BUT NOT LIMITED TO LIGHT FIXTURES, PANELS, TRANSFORMERS, SWITCHBOARD, SHALL BE WEATHER PROOF AND SHALL BE PROTECTED WITH NEMA-3R TYPE, WEATHER PROOF , VANDAL RESISTANT COVERS. ALL OUTDOOR LIGHT FIXTURES SHALL BE WET LISTED
3. ALL UNDERGROUND CONDUITS SHALL BE INSTALLED AT MIN. 24" BELOW FINISHED GRADE UNLESS NOTED OTHERWISE. ALL UTILITY UNDERGROUND CONDUITS SHALL BE INSTALLED PER SERVING UTILITY COMPANY STANDARDS AND DIRECTIONS. CONDUITS TO BE ENCASED IN CONCRETE FOR CONDUITS 2" AND ABOVE. SMALLER CONDUITS CAN BE DIRECTLY BURIED WITH NATIVE EARTH MATERIAL. PROVIDE MIN 6" SOIL BEDDING WHERE CONDUITS ARE DIRECTLY BURIED
4. ALL UNDERGROUND CONDUITS SHALL BE MINIMUM 1" U.O.N, REFER TO ELECTRICAL FRONT SHEET FOR CONDUIT TYPES
5. UNDERGROUND CONDUIT ROUTING IS FOR REFERENCE ONLY. CONTRACTOR SHALL FIELD COORDINATE WITH OTHER TRADES AND FIELD DETERMINE THE EXACT ROUTING. CONTRACTOR SHALL DETERMINE EXISTING CONDUIT/PIPING LOCATIONS AND ROUTE CONDUITS ACCORDINGLY TO AVOID CONFLICTS. ENGINEER IS NOT RESPONSIBLE FOR ANY FIELD ISSUES DUE TO EXISTING CONDUITS/PIPING.
6. PLANS ARE DIAGRAMMATIC AND DO NOT INDICATE THE EXACT QUANTITY OF PULLBOXES, HANDHOLES, J-BOXES. CONTRACTOR MUST PROVIDE AUXILIARY BOXES TO FACILITATE THE INSTALLATION. FOR ELECTRICAL POWER DISTRIBUTION NO MORE THAN 360 DEGREE BENDS BETWEEN TWO PULL POINTS(BOXES) PER CEC 346 & FOR DATA/TELECOMM NO MORE THAN 180 DEGREE BENDS BETWEEN TWO PULL POINTS(BOXES) PER EAI/TIA-569
7. CONTRACTOR IS REQUIRED TO SIZE THE PULL BOXES, HANDHOLES AND ALL ELECT ENCLOSURES PER CEC 314. THE DEPTH & WIDTH OF THE PULL BOX SHALL HAVE ENOUGH SPACE TO ACCOMMODATE THE LARGEST SIZE CONDUITS AND RELATED LOCKNUTS, BUSHING AND ALL OTHER ACCESSORIES. PULL BOX SHALL BE DEEPER THAN MIN. COVER DEPTH REQUIRED FOR UNDERGROUND CONDUIT. MIN. COVER DEPTH PER CEC TABLE 300.5
8. ROUTING OF SERVICE CONDUITS AND LOCATION OF UTILITY COMPANY STRUCTURES INDICATED ON SITE PLAN ARE GENERALLY DIAGRAMMATIC. CONTRACTOR MUST OBTAIN FINAL CONSTRUCTION DRAWINGS FROM THE SERVICING UTILITY COMPANIES BEFORE INSTALLATION OF THE ABOVE ITEMS

KEYNOTES

#	
1	INTERCEPT (E)CONDUIT AND PROVIDE (N)PULLBOX AS SHOWN , LOCATE THE PULLBOX ON THE SIDE WALK OF THE S WARNER ST.
2	(E)(2)4" POWER + 2"DAS + 1" FUTURE SECURITY SPARE UG CONDUITS. DEMOLISH (E)CONDUITS AND PROVIDE (N)CONDUIT PATH AS NOTED.REMOVE WIRING FROM (E)CONDUITS BACK TO SOURCE AND PROVIDE (N)WIRING VIA (N)CONDUITS. FIELD VERIFY QTY AND SIZE OF ALL EXISTING CONDUITS AND WIRING PRIOR TO THE BEGINING OF WORK , (N)WIRING AND CODUIT SHALL MATCH EXISTING
3	1"UG CONDUIT STUB FOR FUTURE EV CHARGING STATIONS. CONDUIT STUB TO BE FLUSHED TO THE GROUND. CAP AND PROVIDE MARKINGS FOR FUTURE USE, TERMINATE THE CONDUITS AS INDICATED
4	CONDUITS FOR SPORTS LIGHTING, REFER TO SHEET E1.02 FOR CIRCUITING AND POWER SUPPLY.
5	PROVIDE LEVEL 2 FREE STANDING DUAL PORT EV CHARGER.PROVIDE 4" HOUSEKEEPING PAD FOR THE CHARGER.
6	PROVIDE LEVEL 2 FREE STANDING SINGLE PORT EV CHARGER. PROVIDE 4" HOUSEKEEPING PAD FOR THE CHARGER.
7	120VAC GFCI RECEPTACLE WITH WEATHERPROOF COVER. 7 TOTAL FOR SCOREBOARD. REFER TO ARCHITECTURAL PLANS FOR SCOREBOARD MOUNTING HEIGHT. REFER TO POOL CONSULTANT DRAWINGS SHEET CP-10 FOR EXACT LAYOUT FOR RECEPTACLES AND ALL ELECTRICAL REQUIREMENTS.
8	GROUND THE SCOREBOARD AND DISPLAY SCREENS TO (2)GROUNDING RODS. BOND ALL METAL PARTS & GROUNDING ELECTRODES OF THE BORD w/#8CU. MAX GROUNDING RESISTANT 10OHM
9	CONTRACTOR SHALL VERIFY EXISTING CONDUITS RUNS AND PROVIDE PULL ARMORED OS2 SMF 12 STRAND FIBER(THREE RUNS TOTAL) FROM CITY HALL TO THE MDF AT POOL. EXISTING SOLAR NETWORK COMMUNICATION EQUIPMENT AND TO WEST EXTERIOR WALL OF SENIOR CENTER. CONTRACTOR SHALL TERMINATE RUNS PER DIRECTION OF CITY IT STAFF(RUN LENGHTS +/- 1350FT, THREE IN TOTAL)

WIRE LEGEND

B1	3/4"C-2#8CU LINE+1#10CU GRD-	40A
B2	1"C-4#6CU LINE+1#8CU SHARED GRD-	40A(2 CKTS)

AGENCY

FLEWELLING & MOODY
architecture planning interiors

HEADQUARTERS OFFICE:
99 S. Lake Avenue, Suite 300
Pasadena, CA 91101
Phone: 323.543.8300
E-Mail: fm-pasadena@flewelling-moody.com

ANTELOPE VALLEY OFFICE:
1035 West Lancaster Boulevard
Lancaster, California 93534
Phone: 661.949.0771
E-Mail: fm-lancaster@flewelling-moody.com

An Employee Owned Corporation

ARCHITECT

CONSULTANT

Budlong
An MBE|SBE|DBE|LSBE Firm
Glendale|Downtown LA|Fremont|Camarillo
W W W . B U D L O N G . C O M
Job No. 23-140

Drawn by: Author

Check by: Checker

Revisions

No.	Date	Description
	01/26/24	100% DD
	03/01/24	50% CD
	05/09/24	90% CD
	08/05/24	100% CD
	11/25/24	100% CD V2
	01/31/25	100% CD V3
	12/17/24	PC CHANGES

All dimensions must be checked at the job by the contractor who accepts full responsibility for their accuracy under the contract. These plans & the specifications in connection therewith have been prepared for a specific site. Any and all responsibility for their use in whole or in part on any other site is hereby disclaimed by Flewelling & Moody.

CITY OF RIDGECREST

SGT. JOHN PINNEY MEMORIAL POOL REPLACEMENT

205 S WARNER ST, RIDGECREST, CA 93555

Drawing Title

ELECTRICAL SITE POWER PLAN

Job No. 3055-0000

Sheet No. **E1.01**

Date 08/07/2024

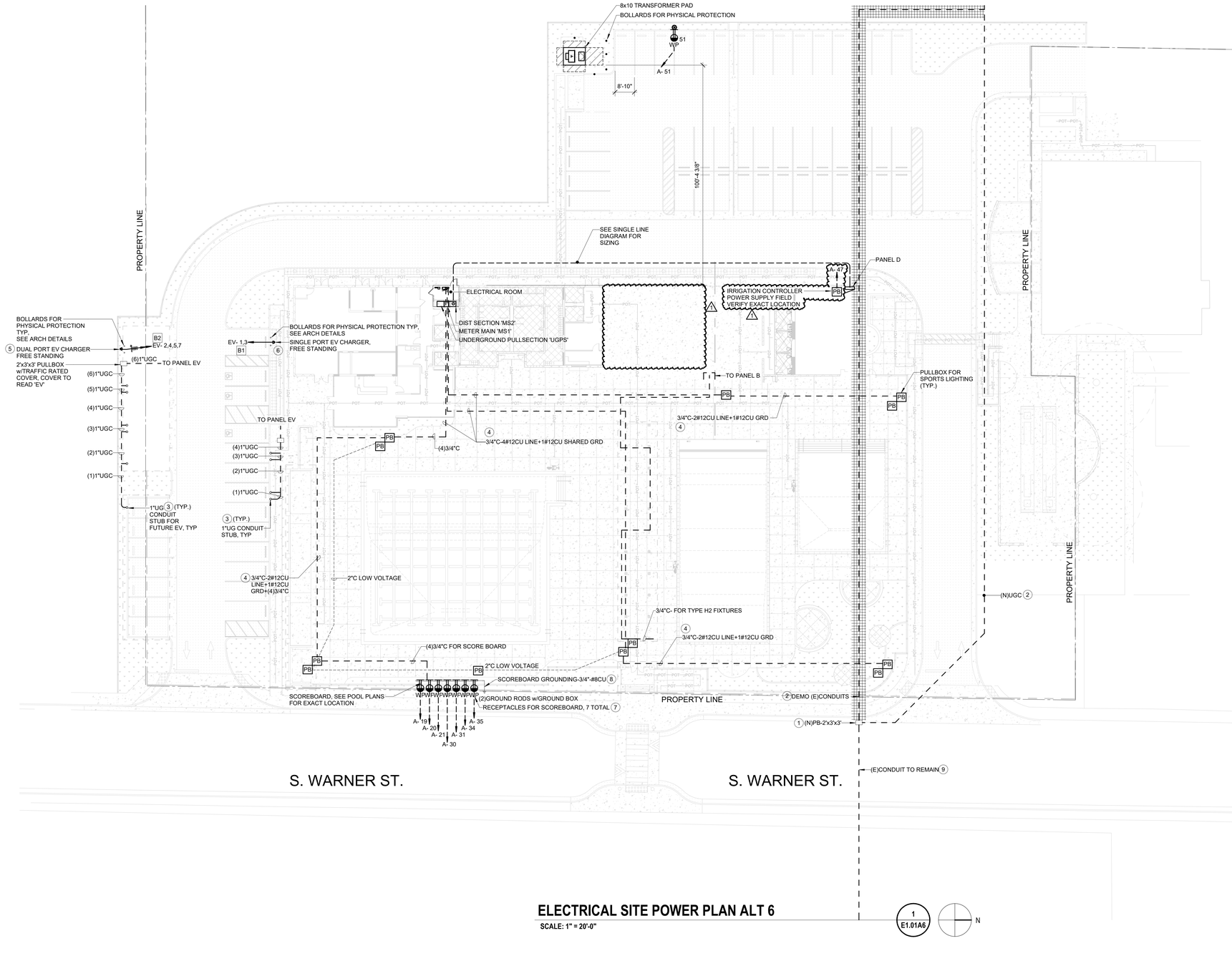

ELECTRICAL SITE POWER PLAN ALT 6

SCALE: 1" = 20'-0"

1 / E1.01A6

N

GENERAL NOTES

1. EMERGENCY LIGHTING TO BE PROVIDED IN CONDUITS/RACEWAYS AND CANT BE MIXED WITH NORMAL LIGHTING IN THE SAME CONDUIT OR RACEWAY
2. ALL ELECTRIC EQ. INSTALLED OUTDOORS INCLUDING BUT NOT LIMITED TO LIGHT FIXTURES, PANELS, TRANSFORMERS, SWITCHBOARD, SHALL BE WEATHER PROOF AND SHALL BE PROTECTED WITH NEMA-3R TYPE, WEATHER PROOF , VANDAL RESISTANT COVERS. ALL OUTDOOR LIGHT FIXTURES SHALL BE WET LISTED
3. ALL UNDERGROUND CONDUITS SHALL BE INSTALLED AT MIN. 24" BELOW FINISHED GRADE UNLESS NOTED OTHERWISE. ALL UTILITY UNDERGROUND CONDUITS SHALL BE INSTALLED PER SERVING UTILITY COMPANY STANDARDS AND DIRECTIONS. CONDUITS TO BE ENCASED IN CONCRETE FOR CONDUITS 2" AND ABOVE. SMALLER CONDUITS CAN BE DIRECTLY BURIED WITH NATIVE EARTH MATERIAL. PROVIDE MIN 6" SOIL BEDDING WHERE CONDUITS ARE DIRECTLY BURIED
4. ALL UNDERGROUND CONDUITS SHALL BE MINIMUM 1" U.O.N, REFER TO ELECTRICAL FRONT SHEET FOR CONDUIT TYPES
5. UNDERGROUND CONDUIT ROUTING IS FOR REFERENCE ONLY. CONTRACTOR SHALL FIELD COORDINATE WITH OTHER TRADES AND FIELD DETERMINE THE EXACT ROUTING. CONTRACTOR SHALL DETERMINE EXISTING CONDUIT/PIPING LOCATIONS AND ROUTE CONDUITS ACCORDINGLY TO AVOID CONFLICTS. ENGINEER IS NOT RESPONSIBLE FOR ANY FIELD ISSUES DUE TO EXISTING CONDUITS/PIPING.
6. PLANS ARE DIAGRAMMATIC AND DO NOT INDICATE THE EXACT QUANTITY OF PULLBOXES, HANDHOLES, J-BOXES. CONTRACTOR MUST PROVIDE AUXILIARY BOXES TO FACILITATE THE INSTALLATION. FOR ELECTRICAL POWER DISTRIBUTION NO MORE THAN 360 DEGREE BENDS BETWEEN TWO PULL POINTS(BOXES) PER CEC 346 & FOR DATA/TELECOMM NO MORE THAN 180 DEGREE BENDS BETWEEN TWO PULL POINTS(BOXES) PER EAI/TIA-569
7. CONTRACTOR IS REQUIRED TO SIZE THE PULL BOXES, HANDHOLES AND ALL ELECT ENCLOSURES PER CEC 314. THE DEPTH & WIDTH OF THE PULL BOX SHALL HAVE ENOUGH SPACE TO ACCOMMODATE THE LARGEST SIZE CONDUITS AND RELATED LOCKNUTS, BUSHING AND ALL OTHER ACCESSORIES. PULL BOX SHALL BE DEEPER THAN MIN. COVER DEPTH REQUIRED FOR UNDERGROUND CONDUIT. MIN. COVER DEPTH PER CEC TABLE 300.5
8. ROUTING OF SERVICE CONDUITS AND LOCATION OF UTILITY COMPANY STRUCTURES INDICATED ON SITE PLAN ARE GENERALLY DIAGRAMMATIC. CONTRACTOR MUST OBTAIN FINAL CONSTRUCTION DRAWINGS FROM THE SERVICING UTILITY COMPANIES BEFORE INSTALLATION OF THE ABOVE ITEMS

KEYNOTES

#	
1	INTERCEPT (E)CONDUIT AND PROVIDE (N)PULLBOX AS SHOWN , LOCATE THE PULLBOX ON THE SIDE WALK OF THE S WARNER ST.
2	(E)(2)4" POWER + 2"DAS + 1" FUTURE SECURITY SPARE UG CONDUITS. DEMOLISH (E)CONDUITS AND PROVIDE (N)CONDUIT PATH AS NOTED.REMOVE WIRING FROM (E)CONDUITS BACK TO SOURCE AND PROVIDE (N)WIRING VIA (N)CONDUITS. FIELD VERIFY QTY AND SIZE OF ALL EXISTING CONDUITS AND WIRING PRIOR TO THE BEGINING OF WORK , (N)WIRING AND CODUIT SHALL MATCH EXISTING
3	1"UG CONDUIT STUB FOR FUTURE EV CHARGING STATIONS. CONDUIT STUB TO BE FLUSHED TO THE GROUND. CAP AND PROVIDE MARKINGS FOR FUTURE USE, TERMINATE THE CONDUITS AS INDICATED
4	CONDUITS FOR SPORTS LIGHTING, REFER TO SHEET E1.02 FOR CIRCUITING AND POWER SUPPLY.
5	PROVIDE LEVEL 2 FREE STANDING DUAL PORT EV CHARGER.PROVIDE 4" HOUSEKEEPING PAD FOR THE CHARGER.
6	PROVIDE LEVEL 2 FREE STANDING SINGLE PORT EV CHARGER. PROVIDE 4" HOUSEKEEPING PAD FOR THE CHARGER.
7	120VAC GFCI RECEPTACLE WITH WEATHERPROOF COVER. 7 TOTAL FOR SCOREBOARD. REFER TO ARCHITECTURAL PLANS FOR SCOREBOARD MOUNTING HEIGHT. REFER TO POOL CONSULTANT DRAWINGS SHEET CP-10 FOR EXACT LAYOUT FOR RECEPTACLES AND ALL ELECTRICAL REQUIREMENTS.
8	GROUND THE SCOREBOARD AND DISPLAY SCREENS TO (2)GROUNDING RODS. BOND ALL METAL PARTS & GROUNDING ELECTRODES OF THE BORD w/#8CU. MAX GROUNDING RESISTANT 10OHM
9	CONTRACTOR SHALL VERIFY EXISTING CONDUITS RUNS AND PROVIDE PULL ARMORED OS2 SMF 12 STRAND FIBER(THREE RUNS TOTAL) FROM CITY HALL TO THE MDF AT POOL. EXISTING SOLAR NETWORK COMMUNICATION EQUIPMENT AND TO WEST EXTERIOR WALL OF SENIOR CENTER. CONTRACTOR SHALL TERMINATE RUNS PER DIRECTION OF CITY IT STAFF(RUN LENGHTS +/- 1350FT, THREE IN TOTAL)

WIRE LEGEND

B1	3/4"C-2#8CU LINE+1#10CU GRD-	40A
B2	1"C-4#6CU LINE+1#8CU SHARED GRD-	40A(2 CKTS)

AGENCY

FLEWELLING & MOODY
architecture planning interiors

HEADQUARTERS OFFICE:
99 S. Lake Avenue, Suite 300
Pasadena, CA 91101
Phone: 323.543.8300
E-Mail: fm-pasadena@flewelling-moody.com

ANTELOPE VALLEY OFFICE:
1035 West Lancaster Boulevard
Lancaster, California 93534
Phone: 661.949.0771
E-Mail: fm-lancaster@flewelling-moody.com

An Employee Owned Corporation

ARCHITECT

CONSULTANT

Budlong
An MBE|SBE|DBE|LSBE Firm
Glendale|Downtown LA|Fremont|Camarillo
W W W . B U D L O N G . C O M
Job No. 23-140

Drawn by: Author

Check by: Checker

Revisions

No.	Date	Description
	01/26/24	100% DD
	03/01/24	50% CD
	05/09/24	90% CD
	08/05/24	100% CD
	11/25/24	100% CD V2
	01/31/25	100% CD V3
	12/17/24	PC CHANGES
1	08/27/2025	BID ALTERNATE

All dimensions must be checked at the job by the contractor who accepts full responsibility for their accuracy under the contract. These plans & the specifications in connection therewith have been prepared for a specific site. Any and all responsibility for their use in whole or in part on any other site is hereby disclaimed by Flewelling & Moody.

CITY OF RIDGECREST

SGT. JOHN PINNEY MEMORIAL POOL REPLACEMENT

205 S WARNER ST, RIDGECREST, CA 93555

Drawing Title

ELECTRICAL SITE POWER PLAN ALT 6

Job No. 3055-0000

Sheet No. **E1.01A6**

Date 08/07/2024

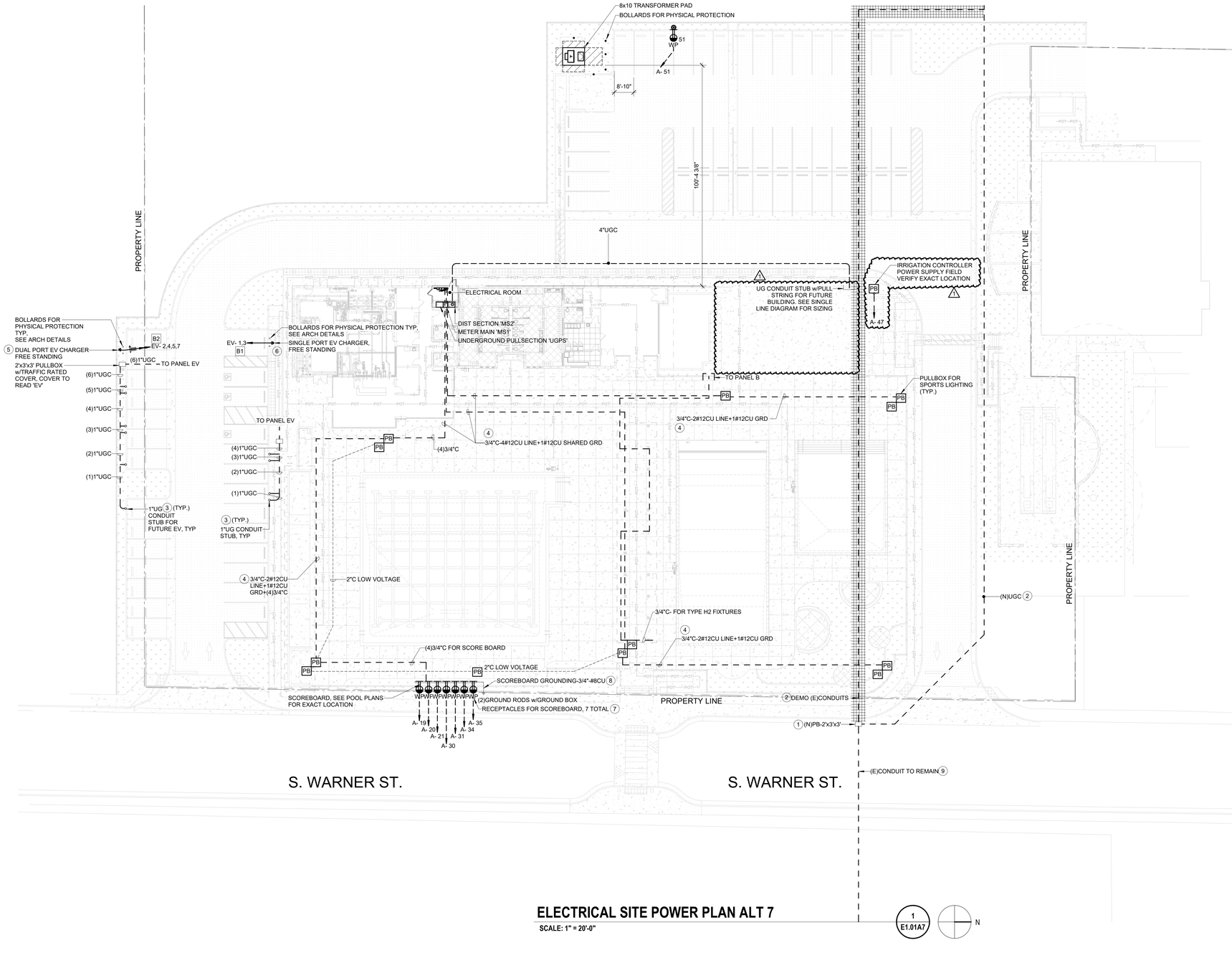

ELECTRICAL SITE POWER PLAN ALT 7

SCALE: 1" = 20'-0"

1 / E1.01A7

N

GENERAL NOTES

1. EMERGENCY LIGHTING TO BE PROVIDED IN CONDUITS/RACEWAYS AND CANT BE MIXED WITH NORMAL LIGHTING IN THE SAME CONDUIT OR RACEWAY
2. ALL ELECTRIC EQ. INSTALLED OUTDOORS INCLUDING BUT NOT LIMITED TO LIGHT FIXTURES, PANELS, TRANSFORMERS, SWITCHBOARD, SHALL BE WEATHER PROOF AND SHALL BE PROTECTED WITH NEMA-3R TYPE, WEATHER PROOF , VANDAL RESISTANT COVERS. ALL OUTDOOR LIGHT FIXTURES SHALL BE WET LISTED
3. ALL UNDERGROUND CONDUITS SHALL BE INSTALLED AT MIN. 24" BELOW FINISHED GRADE UNLESS NOTED OTHERWISE. ALL UTILITY UNDERGROUND CONDUITS SHALL BE INSTALLED PER SERVING UTILITY COMPANY STANDARDS AND DIRECTIONS. CONDUITS TO BE ENCASED IN CONCRETE FOR CONDUITS 2" AND ABOVE. SMALLER CONDUITS CAN BE DIRECTLY BURIED WITH NATIVE EARTH MATERIAL. PROVIDE MIN 6" SOIL BEDDING WHERE CONDUITS ARE DIRECTLY BURIED
4. ALL UNDERGROUND CONDUITS SHALL BE MINIMUM 1" U.O.N, REFER TO ELECTRICAL FRONT SHEET FOR CONDUIT TYPES
5. UNDERGROUND CONDUIT ROUTING IS FOR REFERENCE ONLY. CONTRACTOR SHALL FIELD COORDINATE WITH OTHER TRADES AND FIELD DETERMINE THE EXACT ROUTING. CONTRACTOR SHALL DETERMINE EXISTING CONDUIT/PIPING LOCATIONS AND ROUTE CONDUITS ACCORDINGLY TO AVOID CONFLICTS. ENGINEER IS NOT RESPONSIBLE FOR ANY FIELD ISSUES DUE TO EXISTING CONDUITS/PIPING.
6. PLANS ARE DIAGRAMMATIC AND DO NOT INDICATE THE EXACT QUANTITY OF PULLBOXES, HANDHOLES, J-BOXES. CONTRACTOR MUST PROVIDE AUXILIARY BOXES TO FACILITATE THE INSTALLATION. FOR ELECTRICAL POWER DISTRIBUTION NO MORE THAN 360 DEGREE BENDS BETWEEN TWO PULL POINTS(BOXES) PER CEC 346 & FOR DATA/TELECOMM NO MORE THAN 180 DEGREE BENDS BETWEEN TWO PULL POINTS(BOXES) PER EAI/TIA-569
7. CONTRACTOR IS REQUIRED TO SIZE THE PULL BOXES, HANDHOLES AND ALL ELECT ENCLOSURES PER CEC 314. THE DEPTH & WIDTH OF THE PULL BOX SHALL HAVE ENOUGH SPACE TO ACCOMMODATE THE LARGEST SIZE CONDUITS AND RELATED LOCKNUTS, BUSHING AND ALL OTHER ACCESSORIES. PULL BOX SHALL BE DEEPER THAN MIN. COVER DEPTH REQUIRED FOR UNDERGROUND CONDUIT. MIN. COVER DEPTH PER CEC TABLE 300.5
8. ROUTING OF SERVICE CONDUITS AND LOCATION OF UTILITY COMPANY STRUCTURES INDICATED ON SITE PLAN ARE GENERALLY DIAGRAMMATIC. CONTRACTOR MUST OBTAIN FINAL CONSTRUCTION DRAWINGS FROM THE SERVICING UTILITY COMPANIES BEFORE INSTALLATION OF THE ABOVE ITEMS

KEYNOTES

#	
1	INTERCEPT (E)CONDUIT AND PROVIDE (N)PULLBOX AS SHOWN , LOCATE THE PULLBOX ON THE SIDE WALK OF THE S WARNER ST.
2	(E)(2)4" POWER + 2"DAS + 1" FUTURE SECURITY SPARE UG CONDUITS. DEMOLISH (E)CONDUITS AND PROVIDE (N)CONDUIT PATH AS NOTED.REMOVE WIRING FROM (E)CONDUITS BACK TO SOURCE AND PROVIDE (N)WIRING VIA (N)CONDUITS. FIELD VERIFY QTY AND SIZE OF ALL EXISTING CONDUITS AND WIRING PRIOR TO THE BEGINING OF WORK , (N)WIRING AND CODUIT SHALL MATCH EXISTING
3	1"UG CONDUIT STUB FOR FUTURE EV CHARGING STATIONS. CONDUIT STUB TO BE FLUSHED TO THE GROUND. CAP AND PROVIDE MARKINGS FOR FUTURE USE, TERMINATE THE CONDUITS AS INDICATED
4	CONDUITS FOR SPORTS LIGHTING, REFER TO SHEET E1.02 FOR CIRCUITING AND POWER SUPPLY.
5	PROVIDE LEVEL 2 FREE STANDING DUAL PORT EV CHARGER.PROVIDE 4" HOUSEKEEPING PAD FOR THE CHARGER.
6	PROVIDE LEVEL 2 FREE STANDING SINGLE PORT EV CHARGER. PROVIDE 4" HOUSEKEEPING PAD FOR THE CHARGER.
7	120VAC GFCI RECEPTACLE WITH WEATHERPROOF COVER. 7 TOTAL FOR SCOREBOARD. REFER TO ARCHITECTURAL PLANS FOR SCOREBOARD MOUNTING HEIGHT. REFER TO POOL CONSULTANT DRAWINGS SHEET CP-10 FOR EXACT LAYOUT FOR RECEPTACLES AND ALL ELECTRICAL REQUIREMENTS.
8	GROUND THE SCOREBOARD AND DISPLAY SCREENS TO (2)GROUNDING RODS. BOND ALL METAL PARTS & GROUNDING ELECTRODES OF THE BORD w/#8CU. MAX GROUNDING RESISTANT 10OHM
9	CONTRACTOR SHALL VERIFY EXISTING CONDUITS RUNS AND PROVIDE PULL ARMORED OS2 SMF 12 STRAND FIBER(THREE RUNS TOTAL) FROM CITY HALL TO THE MDF AT POOL. EXISTING SOLAR NETWORK COMMUNICATION EQUIPMENT AND TO WEST EXTERIOR WALL OF SENIOR CENTER. CONTRACTOR SHALL TERMINATE RUNS PER DIRECTION OF CITY IT STAFF(RUN LENGHTS +/- 1350FT, THREE IN TOTAL)

WIRE LEGEND

B1	3/4"C-2#8CU LINE+1#10CU GRD-	40A
B2	1"C-4#6CU LINE+1#8CU SHARED GRD-	40A(2 CKTS)

AGENCY

FLEWELLING & MOODY
architecture planning interiors

HEADQUARTERS OFFICE:
99 S. Lake Avenue, Suite 300
Pasadena, CA 91101
Phone: 323.543.8300
E-Mail: fm-pasadena@flewelling-moody.com

ANTELOPE VALLEY OFFICE:
1035 West Lancaster Boulevard
Lancaster, California 93534
Phone: 661.949.0771
E-Mail: fm-lancaster@flewelling-moody.com

An Employee Owned Corporation

ARCHITECT

CONSULTANT

Budlong
An MBE|SBE|DBE|LSBE Firm
Glendale|Downtown LA|Fremont|Camarillo
W W W . B U D L O N G . C O M
Job No. 23-140

Drawn by: Author

Check by: Checker

Revisions

No.	Date	Description
	01/26/24	100% DD
	03/01/24	50% CD
	05/09/24	90% CD
	08/05/24	100% CD
	11/25/24	100% CD V2
	01/31/25	100% CD V3
	12/17/24	PC CHANGES
1	08/27/2025	BID ALTERNATE

All dimensions must be checked at the job by the contractor who accepts full responsibility for their accuracy under the contract. These plans & the specifications in connection therewith have been prepared for a specific site. Any and all responsibility for their use in whole or in part on any other site is hereby disclaimed by Flewelling & Moody.

CITY OF RIDGECREST

SGT. JOHN PINNEY MEMORIAL POOL REPLACEMENT

205 S WARNER ST, RIDGECREST, CA 93555

Drawing Title

ELECTRICAL SITE POWER PLAN ALT 7

Job No. 3055-0000

Sheet No. **E1.01A7**

Date 08/07/2024

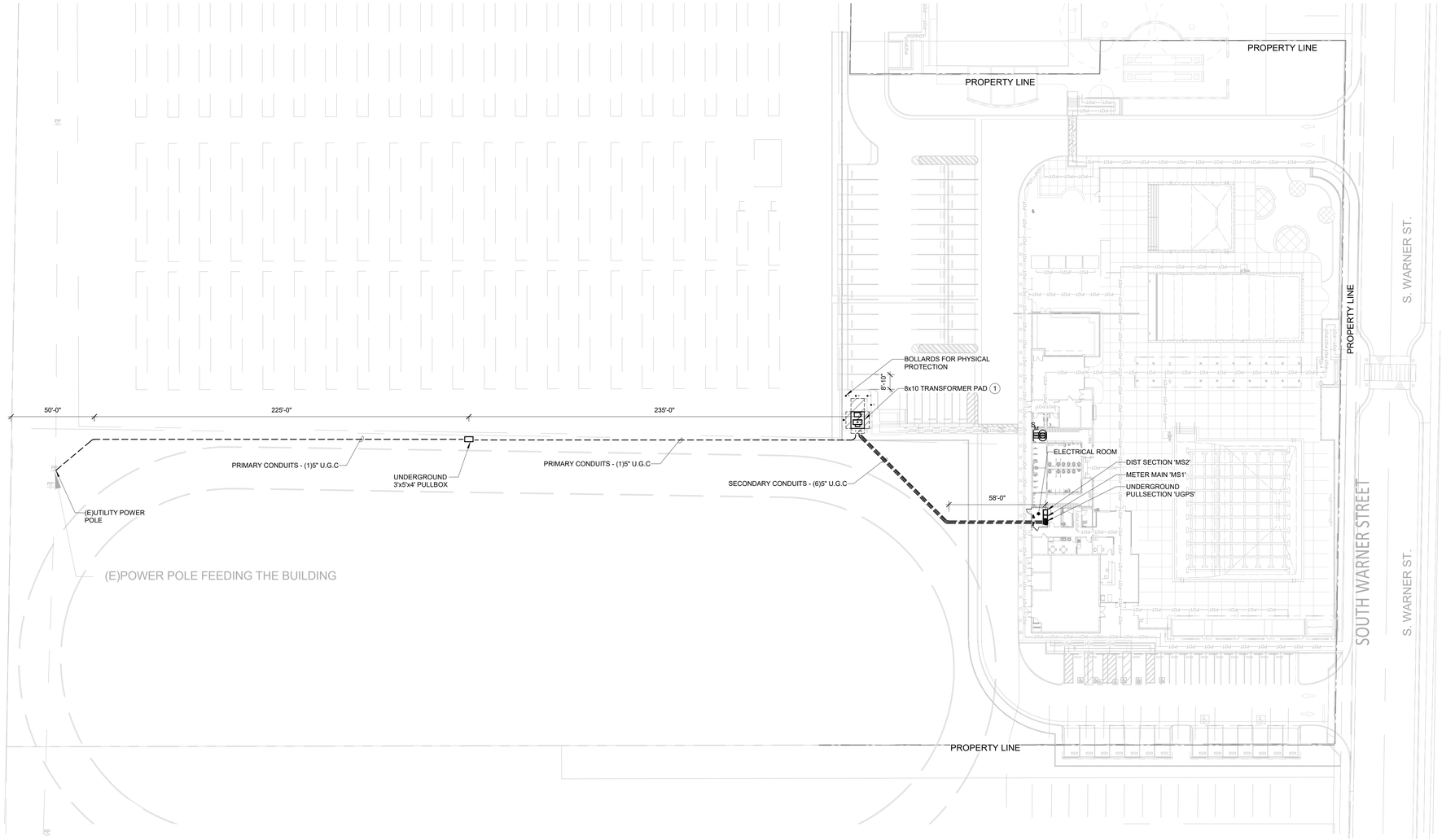

ELECTRICAL UTILITY SITE PLAN

SCALE: 1" = 30'-0"

1 / E1.01A

N

GENERAL NOTES

1. EMERGENCY LIGHTING TO BE PROVIDED IN CONDUITS/RACEWAYS AND CANT BE MIXED WITH NORMAL LIGHTING IN THE SAME CONDUIT OR RACEWAY
2. ALL ELECTRIC EQ. INSTALLED OUTDOORS INCLUDING BUT NOT LIMITED TO LIGHT FIXTURES, PANELS, TRANSFORMERS, SWITCHBOARD, SHALL BE WEATHER PROOF AND SHALL BE PROTECTED WITH NEMA-3R TYPE. WEATHER PROOF , VANDAL RESISTANT COVERS. ALL OUTDOOR LIGHT FIXTURES SHALL BE WET LISTED
3. ALL UNDERGROUND CONDUITS SHALL BE INSTALLED AT MIN. 24" BELOW FINISHED GRADE UNLESS NOTED OTHERWISE. ALL UTILITY UNDERGROUND CONDUITS SHALL BE INSTALLED PER SERVING UTILITY COMPANY STANDARDS AND DIRECTIONS. CONDUITS TO BE ENCASED IN CONCRETE FOR CONDUITS 2" AND ABOVE. SMALLER CONDUITS CAN BE DIRECTLY BURIED WITH NATIVE EARTH MATERIAL. PROVIDE MIN 6" SOIL BEDDING WHERE CONDUITS ARE DIRECTLY BURIED
4. ALL UNDERGROUND CONDUITS SHALL BE MINIMUM 1" U.O.N, REFER TO ELECTRICAL FRONT SHEET FOR CONDUIT TYPES
5. UNDERGROUND CONDUIT ROUTING IS FOR REFERENCE ONLY. CONTRACTOR SHALL FIELD COORDINATE WITH OTHER TRADES AND FIELD DETERMINE THE EXACT ROUTING. CONTRACTOR SHALL DETERMINE EXISTING CONDUIT/PIPING LOCATIONS AND ROUTE CONDUITS ACCORDINGLY TO AVOID CONFLICTS. ENGINEER IS NOT RESPONSIBLE FOR ANY FIELD ISSUES DUE TO EXISTING CONDUITS/PIPING.
6. PLANS ARE DIAGRAMMATIC AND DO NOT INDICATE THE EXACT QUANTITY OF PULLBOXES, HANDHOLES, J-BOXES. CONTRACTOR MUST PROVIDE AUXILIARY BOXES TO FACILITATE THE INSTALLATION FOR ELECTRICAL POWER DISTRIBUTION NO MORE THAN 360 DEGREE BENDS BETWEEN TWO PULL POINTS(BOXES) PER CEC 346 & FOR DATA/TELECOMM NO MORE THAN 180 DEGREE BENDS BETWEEN TWO PULL POINTS(BOXES) PER EAI/TIA-569
7. CONTRACTOR IS REQUIRED TO SIZE THE PULL BOXES, HANDHOLES AND ALL ELECT ENCLOSURES PER CEC 314. THE DEPTH & WIDTH OF THE PULL BOX SHALL HAVE ENOUGH SPACE TO ACCOMMODATE THE LARGEST SIZE CONDUITS AND RELATED LOCKNUTS, BUSHING AND ALL OTHER ACCESSORIES. PULL BOX SHALL BE DEEPER THAN MIN. COVER DEPTH REQUIRED FOR UNDERGROUND CONDUIT. MIN. COVER DEPTH PER CEC TABLE 300.5
8. ROUTING OF SERVICE CONDUITS AND LOCATION OF UTILITY COMPANY STRUCTURES INDICATED ON SITE PLAN ARE GENERALLY DIAGRAMMATIC. CONTRACTOR MUST OBTAIN FINAL CONSTRUCTION DRAWINGS FROM THE SERVICING UTILITY COMPANIES BEFORE INSTALLATION OF THE ABOVE ITEMS

KEYNOTES

#	
1	PROVIDE GROUNDING PER UTILITY COMPANY REQUIREMENTS

AGENCY

REVIEWED FOR CODE COMPLIANCE BY: WILLDAN ENGINEERING

Approval of these plans & specifications shall not be construed to be a permit for, or an approval of any violation of any Federal, State, County or City laws or ordinances. One set of approved plans must be kept on the job until completion.

10:06:24 AM Jul 21, 2025

FLEWELLING & MOODY
architecture planning interiors

HEADQUARTERS OFFICE:
99 S. Lake Avenue, Suite 300
Pasadena, CA 91101
Phone: 323.543.8300
E-Mail: fm-pasadena@flewelling-moody.com

ANTELOPE VALLEY OFFICE:
1035 West Lancaster Boulevard
Lancaster, California 93534
Phone: 661.949.0771
E-Mail: fm-lancaster@flewelling-moody.com

An Employee Owned Corporation

ARCHITECT

CONSULTANT

Budlong
An MBE|SBE|DBE|LSBE Firm
Glendale|Downtown LA|Fremont|Camarillo
W W W . B U D L O N G . C O M
Job No. 23-140

REGISTERED PROFESSIONAL ENGINEER MARK H. CHRISTIAN E 23864 7/30/25 ELECTRICAL STATE OF CA

Drawn by: Author

Check by: Checker

Revisions

No.	Date	Description
	01/26/24	100% DD
	03/01/24	50% CD
	05/09/24	90% CD
	08/05/24	100% CD
	11/25/24	100% CD V2
	01/31/25	100% CD V3
	12/17/24	PC CHANGES

All dimensions must be checked at the job by the contractor who accepts full responsibility for their accuracy under the contract. These plans & the specifications in connection therewith have been prepared for a specific site. Any and all responsibility for their use in whole or in part on any other site is hereby disclaimed by Flewelling & Moody.

CITY OF RIDGECREST

SGT. JOHN PINNEY MEMORIAL POOL REPLACEMENT

205 S WARNER ST, RIDGECREST, CA 93555

Drawing Title

ELECTRICAL SITE UTILITY POWER PLAN

Job No. 3055-0100

Date 05/09/2025

Sheet No. **E1.01A**

FINAL DESIGN
APPROVED FOR CONSTRUCTION

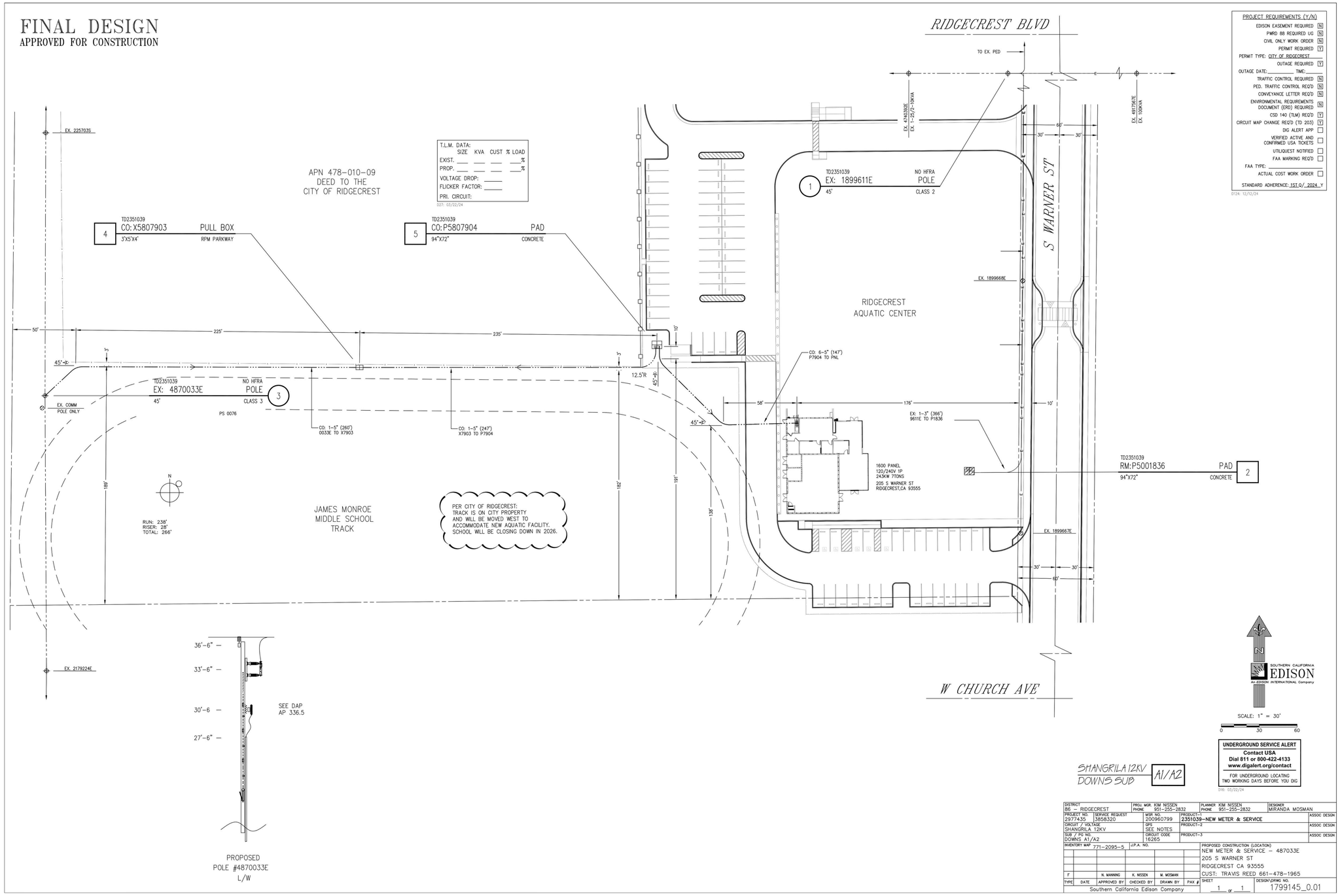

PROJECT REQUIREMENTS (Y/N)

EDISON EASEMENT REQUIRED	N
PWRD 88 REQUIRED UG	N
CIVIL ONLY WORK ORDER	N
PERMIT REQUIRED	Y
PERMIT TYPE: CITY OF RIDGECREST	
OUTAGE REQUIRED	Y
OUTAGE DATE: _____ TIME: _____	
TRAFFIC CONTROL REQUIRED	N
PED. TRAFFIC CONTROL REQ'D	N
CONVEYANCE LETTER REQ'D	N
ENVIRONMENTAL REQUIREMENTS DOCUMENT (ERD) REQUIRED	N
CSD 140 (TLM) REQ'D	Y
CIRCUIT MAP CHANGE REQ'D (TD 203)	Y
DIG ALERT APP	☐
VERIFIED ACTIVE AND CONFIRMED USA TICKETS	☐
UTILIQUEST NOTIFIED	☐
FAA MARKING REQ'D	☐
FAA TYPE:	
ACTUAL COST WORK ORDER	☐
STANDARD ADHERENCE: IST.O/ 2024 Y	

0124: 12/12/24

SHANGRILA 12KV
DOWNS SUB A1/A2

SOUTHERN CALIFORNIA EDISON
An EDISON INTERNATIONAL Company

UNDERGROUND SERVICE ALERT
Contact USA
Dial 811 or 800-422-4133
www.digalert.org/contact
FOR UNDERGROUND LOCATING
TWO WORKING DAYS BEFORE YOU DIG
D16: 03/22/24

DISTRICT: 86 – RIDGECREST	PROJ. MGR: KIM NISSEN PHONE 951-255-2832	PLANNER: KIM NISSEN PHONE 951-255-2832	DESIGNER: MIRANDA MOSMAN	
PROJECT NO.: 2977435	SERVICE REQUEST: 3858320	WOR NO.: 200960799	PRODUCT-1: 2351039-NEW METER & SERVICE	ASSOC DESIGN
CIRCUIT / VOLTAGE: SHANGRILA 12KV		GPS: SEE NOTES	PRODUCT-2	ASSOC DESIGN
SUB / PC NO.: DOWNS A1/A2		CIRCUIT CODE: 16265	PRODUCT-3	ASSOC DESIGN
INVENTORY MAP: 771-2095-5		J.P.A. NO.:	PROPOSED CONSTRUCTION (LOCATION): NEW METER & SERVICE – 487033E 205 S WARNER ST RIDGECREST CA 93555 CUST: TRAVIS REED 661-478-1965	
F	N. MANNING	K. NISSEN	M. MOSMAN	
TYPE	DATE	APPROVED BY	CHECKED BY	DRAWN BY
Southern California Edison Company				PAX #
SHEET: 1 or 1				DESIGN\DRNG NO.: 1799145_0.01

ELECTRICAL SCE PLANS
SCALE:NTS

1
E1.01B

Autodesk Docs://23-140 - Pinney Pool Replacement/MEP22_23-140_F&M PINNEY POOL REPLACEMENT.rvt 5/6/2025 11:33:03 AM

AGENCY

REVIEWED FOR CODE COMPLIANCE BY: WILLDAN ENGINEERING
Approval of these plans & specifications shall not be construed to be a permit for, or an approval of any violation of any Federal, State, County or City laws or ordinances. One set of approved plans must be kept on the job until completion.
10:06:25 AM Jul 21, 2025

FLEWELLING & MOODY
architecture planning interiors

HEADQUARTERS OFFICE:
99 S. Lake Avenue, Suite 300
Pasadena, CA 91101
Phone: 323.543.8300
E-Mail: fm-pasadena@flewelling-moody.com

ANTELOPE VALLEY OFFICE:
1035 West Lancaster Boulevard
Lancaster, California 93534
Phone: 661.949.0771
E-Mail: fm-lancaster@flewelling-moody.com

An Employee Owned Corporation

ARCHITECT

CONSULTANT

Budlong
An MBE|SBE|DBE|LSBE Firm
Glendale|Downtown LA|Fremont|Camarillo
W W W . B U D L O N G . C O M
Job No. 23-140

REGISTERED PROFESSIONAL ENGINEER
JAMAR R. CHRISTIAN
No. E 22864
CIVIL
STATE OF CALIFORNIA

Drawn by: Author
Check by: Checker
Revisions

No.	Date	Description
	12/17/24	PC CHANGES

All dimensions must be checked at the job by the contractor who accepts full responsibility for their accuracy under the contract. These plans & the specifications in connection therewith have been prepared for a specific site. Any and all responsibility for their use in whole or in part on any other site is hereby disclaimed by Flewelling & Moody.

CITY OF RIDGECREST

SGT. JOHN PINNEY MEMORIAL POOL REPLACEMENT

205 S WARNER ST, RIDGECREST, CA 93555

Drawing Title

ELECTRICAL SCE PLANS

Job No. 3055-0100
Date 05/09/2025
Sheet No. **E1.01B**

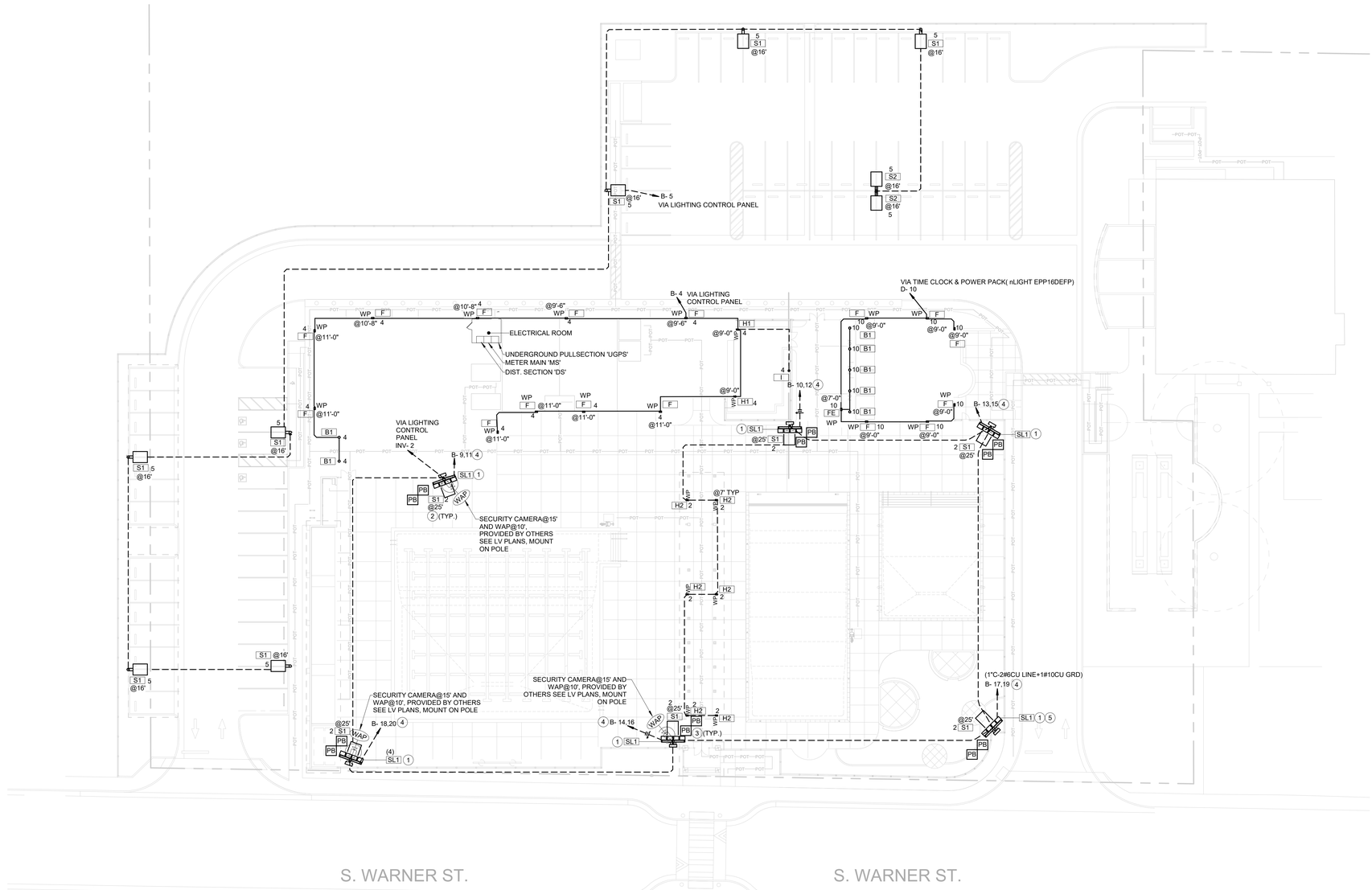

ELECTRICAL SITE LIGHTING PLAN

SCALE: 1" = 20'-0"

1 / E1.02

N

GENERAL NOTES

1. EMERGENCY LIGHTING TO BE PROVIDED IN CONDUITS/RACEWAYS AND CANT BE MIXED WITH NORMAL LIGHTING IN THE SAME CONDUIT OR RACEWAY
2. ALL ELECTRIC EQ. INSTALLED OUTDOORS INCLUDING BUT NOT LIMITED TO LIGHT FIXTURES, PANELS, TRANSFORMERS, SWITCHBOARD, SHALL BE WEATHER PROOF AND SHALL BE PROTECTED WITH NEMA-3R TYPE, WEATHER PROOF, VANDAL RESISTANT COVERS. ALL OUTDOOR LIGHT FIXTURES SHALL BE WET LISTED
3. ALL UNDERGROUND CONDUITS SHALL BE INSTALLED AT MIN. 24" BELOW FINISHED GRADE UNLESS NOTED OTHERWISE. ALL UTILITY UNDERGROUND CONDUITS SHALL BE INSTALLED PER SERVING UTILITY COMPANY STANDARDS AND DIRECTIONS. CONDUITS TO BE ENCASED IN CONCRETE FOR CONDUITS 2" AND ABOVE. SMALLER CONDUITS CAN BE DIRECTLY BURIED WITH NATIVE EARTH MATERIAL. PROVIDE MIN 6" SOIL BEDDING WHERE CONDUITS ARE DIRECTLY BURIED
4. ALL UNDERGROUND CONDUITS SHALL BE MINIMUM 1" U.O.N, REFER TO ELECTRICAL FRONT SHEET FOR CONDUIT TYPES
5. UNDERGROUND CONDUIT ROUTING IS FOR REFERENCE ONLY. CONTRACTOR SHALL FIELD COORDINATE WITH OTHER TRADES AND FIELD DETERMINE THE EXACT ROUTING. CONTRACTOR SHALL DETERMINE EXISTING CONDUIT/PIPING LOCATIONS AND ROUTE CONDUITS ACCORDINGLY TO AVOID CONFLICTS. ENGINEER IS NOT RESPONSIBLE FOR ANY FIELD ISSUES DUE TO EXISTING CONDUITS/PIPING.
6. PLANS ARE DIAGRAMMATIC AND DO NOT INDICATE THE EXACT QUANTITY OF PULLBOXES, HANDHOLES, J-BOXES. CONTRACTOR MUST PROVIDE AUXILIARY BOXES TO FACILITATE THE INSTALLATION. FOR ELECTRICAL POWER DISTRIBUTION NO MORE THAN 360 DEGREE BENDS BETWEEN TWO PULL POINTS(BOXES) PER CEC 346 & FOR DATA/TELECOMM NO MORE THAN 180 DEGREE BENDS BETWEEN TWO PULL POINTS(BOXES) PER EAI/TIA-569
7. CONTRACTOR IS REQUIRED TO SIZE THE PULL BOXES, HANDHOLES AND ALL ELECT ENCLOSURES PER CEC 314. THE DEPTH & WIDTH OF THE PULL BOX SHALL HAVE ENOUGH SPACE TO ACCOMMODATE THE LARGEST SIZE CONDUITS AND RELATED LOCKNUTS, BUSHING AND ALL OTHER ACCESSORIES. PULL BOX SHALL BE DEEPER THAN MIN. COVER DEPTH REQUIRED FOR UNDERGROUND CONDUIT. MIN. COVER DEPTH PER CEC TABLE 300.5
8. ROUTING OF SERVICE CONDUITS AND LOCATION OF UTILITY COMPANY STRUCTURES INDICATED ON SITE PLAN ARE GENERALLY DIAGRAMMATIC. CONTRACTOR MUST OBTAIN FINAL CONSTRUCTION DRAWINGS FROM THE SERVICING UTILITY COMPANIES BEFORE INSTALLATION OF THE ABOVE ITEMS

KEYNOTES

#	
1	SPORTS LIGHT FIXTURE, INSTALL PER MANUFACTURER REQUIREMENTS. TILT ANGLE, MOUNTING HEIGHT AND MOUNTING SHALL BE PER MANUFACTURER. SEE SHEET E8.01, E8.02 AND E8.03 FOR SPORTS LIGHT/POLE QTY, REQUIREMENTS AND EXACT LOCATIONS.
2	MOUNT THE LIGHT ON SPORTS LIGHTING POLE, RUN WIRING UPTO THE FIXTURE
3	PROVIDE (2)12" x12" CONCRETE POLYMER PULLBOXES AT EACH POLE FOR WIRING. FIELD VERIFY EXACT LOCATION.
4	ALL SPORTS LIGHTING CIRCUITS TO GO THRU LIGHTING CONTROL PANEL. PROVIDE ADDITIONAL 1"C AND 0-10V DIMMING WIRING PER POLE FOR SPORTS LIGHTING DIMMING.
5	FARTHEST OUTLET FROM THE MAIN DISTRIBUTION SECTION 'MS2'. %VD=3.80%

WIRE LEGEND

B1	3/4"C-2#8CU LINE+1#10CU GRD-	40A
B2	1"C-4#6CU LINE+1#8CU SHARED GRD-	40A(CKTS)

LIGHTING CONTROL CONDUIT REQUIREMENTS

1. PROVIDE 1"C BETWEEN LIGHTING CONTROL DEVICES INCLUDING BUT NOT LIMITED TO OCCUPANCY SENSORS, DAYLIGHT SENSORS, SWITCHES ETC. PROVIDE CONTROL WIRING PER MFR REQUIREMENTS
2. PROVIDE SEPERATE 3/4"C w/0-10V WIRING WHEREEVER 0-10V DIMMING IS REQUIRED

AGENCY

REVIEWED FOR CODE COMPLIANCE BY: WILLDAN ENGINEERING

Approval of these plans & specifications shall not be construed to be a permit for, or an approval of any violation of any Federal, State, County or City laws or ordinances. One set of approved plans must be kept on the job until completion.

10:06:26 AM Jul 21, 2025

FLEWELLING & MOODY
architecture planning interiors

HEADQUARTERS OFFICE:
99 S. Lake Avenue, Suite 300
Pasadena, CA 91101
Phone: 323.543.8300
E-Mail: fm-pasadena@flewelling-moody.com

ANTELOPE VALLEY OFFICE:
1035 West Lancaster Boulevard
Lancaster, California 93534
Phone: 661.949.0771
E-Mail: fm-lancaster@flewelling-moody.com

An Employee Owned Corporation

ARCHITECT

CONSULTANT

Budlong
An MBE|SBE|DBE|LSBE Firm
Glendale|Downtown LA|Fremont|Camarillo
W W W . B U D L O N G . C O M
Job No. 23-140

REGISTERED PROFESSIONAL ENGINEER JAMES H. CHRISTIAN No. E 22864 Exp. 6/30/25 ELECTRICAL STATE OF CA

Drawn by: Author

Check by: Checker

Revisions

No.	Date	Description
	01/26/24	100% DD
	03/01/24	50% CD
	05/09/24	90% CD
	08/05/24	100% CD
	11/25/24	100% CD V2
	01/31/25	100% CD V3

All dimensions must be checked at the job by the contractor who accepts full responsibility for their accuracy under the contract. These plans & the specifications in connection therewith have been prepared for a specific site. Any and all responsibility for their use in whole or in part on any other site is hereby disclaimed by Flewelling & Moody.

CITY OF RIDGECREST

SGT. JOHN PINNEY MEMORIAL POOL REPLACEMENT

205 S WARNER ST, RIDGECREST, CA 93555

Drawing Title

N

ELECTRICAL SITE LIGHTING PLAN

Job No. 3055-0100

Date 05/09/2025

Sheet No. **E1.02**

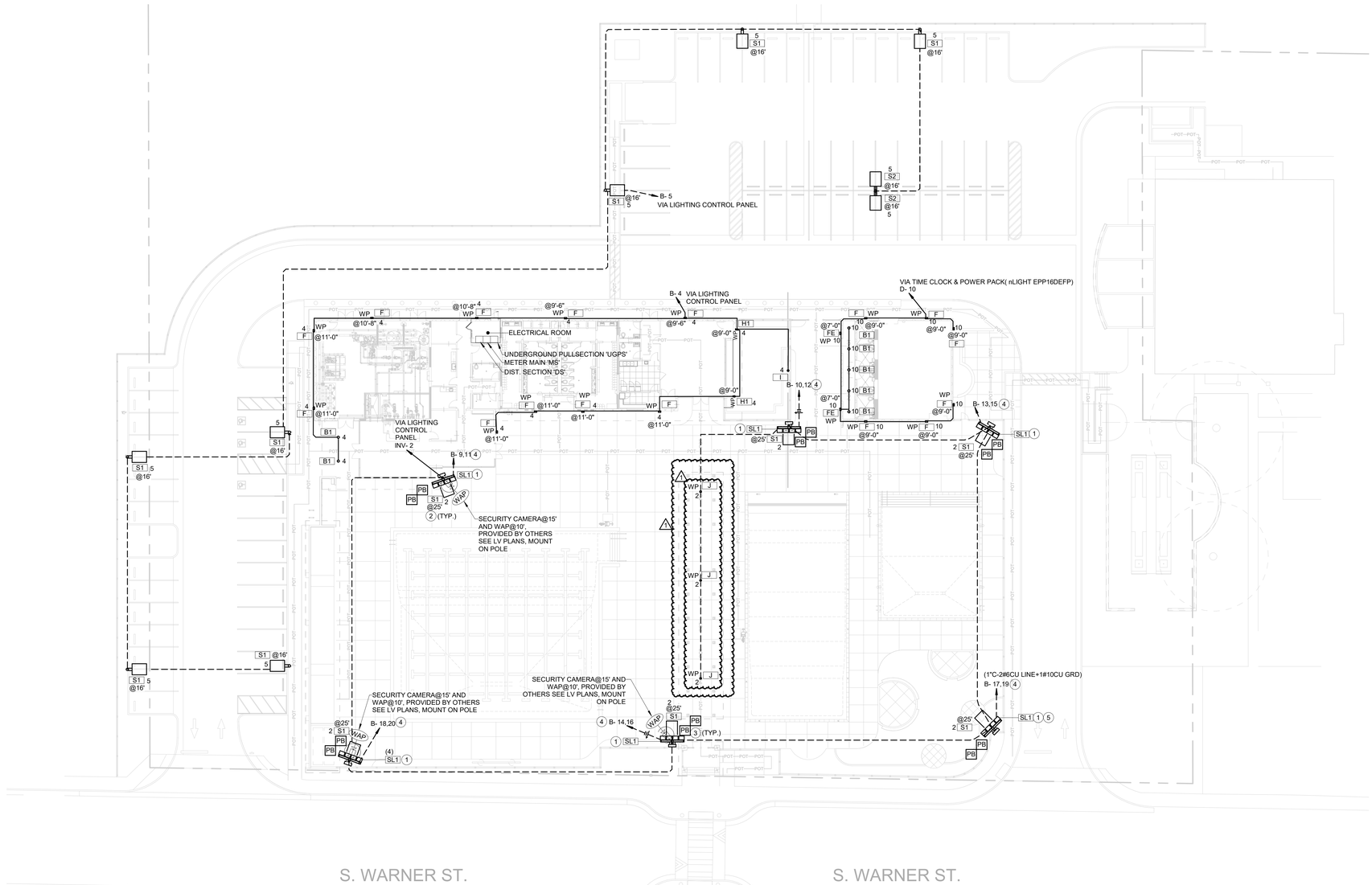

ELECTRICAL SITE LIGHTING PLAN ALT 3

SCALE: 1" = 20'-0"

1 / E1.02A3

N

GENERAL NOTES

1. EMERGENCY LIGHTING TO BE PROVIDED IN CONDUITS/RACEWAYS AND CANT BE MIXED WITH NORMAL LIGHTING IN THE SAME CONDUIT OR RACEWAY
2. ALL ELECTRIC EQ. INSTALLED OUTDOORS INCLUDING BUT NOT LIMITED TO LIGHT FIXTURES, PANELS, TRANSFORMERS, SWITCHBOARD, SHALL BE WEATHER PROOF AND SHALL BE PROTECTED WITH NEMA-3R TYPE, WEATHER PROOF , VANDAL RESISTANT COVERS. ALL OUTDOOR LIGHT FIXTURES SHALL BE WET LISTED
3. ALL UNDERGROUND CONDUITS SHALL BE INSTALLED AT MIN. 24" BELOW FINISHED GRADE UNLESS NOTED OTHERWISE. ALL UTILITY UNDERGROUND CONDUITS SHALL BE INSTALLED PER SERVING UTILITY COMPANY STANDARDS AND DIRECTIONS. CONDUITS TO BE ENCASED IN CONCRETE FOR CONDUITS 2" AND ABOVE. SMALLER CONDUITS CAN BE DIRECTLY BURIED WITH NATIVE EARTH MATERIAL. PROVIDE MIN 6" SOIL BEDDING WHERE CONDUITS ARE DIRECTLY BURIED
4. ALL UNDERGROUND CONDUITS SHALL BE MINIMUM 1" U.O.N, REFER TO ELECTRICAL FRONT SHEET FOR CONDUIT TYPES
5. UNDERGROUND CONDUIT ROUTING IS FOR REFERENCE ONLY. CONTRACTOR SHALL FIELD COORDINATE WITH OTHER TRADES AND FIELD DETERMINE THE EXACT ROUTING. CONTRACTOR SHALL DETERMINE EXISTING CONDUIT/PIPING LOCATIONS AND ROUTE CONDUITS ACCORDINGLY TO AVOID CONFLICTS. ENGINEER IS NOT RESPONSIBLE FOR ANY FIELD ISSUES DUE TO EXISTING CONDUITS/PIPING.
6. PLANS ARE DIAGRAMMATIC AND DO NOT INDICATE THE EXACT QUANTITY OF PULLBOXES, HANDHOLES, J-BOXES. CONTRACTOR MUST PROVIDE AUXILIARY BOXES TO FACILITATE THE INSTALLATION. FOR ELECTRICAL POWER DISTRIBUTION NO MORE THAN 360 DEGREE BENDS BETWEEN TWO PULL POINTS(BOXES) PER CEC 346 & FOR DATA/TELECOMM NO MORE THAN 180 DEGREE BENDS BETWEEN TWO PULL POINTS(BOXES) PER EAI/TIA-569
7. CONTRACTOR IS REQUIRED TO SIZE THE PULL BOXES, HANDHOLES AND ALL ELECT ENCLOSURES PER CEC 314. THE DEPTH & WIDTH OF THE PULL BOX SHALL HAVE ENOUGH SPACE TO ACCOMMODATE THE LARGEST SIZE CONDUITS AND RELATED LOCKNUTS, BUSHING AND ALL OTHER ACCESSORIES. PULL BOX SHALL BE DEEPER THAN MIN. COVER DEPTH REQUIRED FOR UNDERGROUND CONDUIT. MIN. COVER DEPTH PER CEC TABLE 300.5
8. ROUTING OF SERVICE CONDUITS AND LOCATION OF UTILITY COMPANY STRUCTURES INDICATED ON SITE PLAN ARE GENERALLY DIAGRAMMATIC. CONTRACTOR MUST OBTAIN FINAL CONSTRUCTION DRAWINGS FROM THE SERVICING UTILITY COMPANIES BEFORE INSTALLATION OF THE ABOVE ITEMS

KEYNOTES

#	
1	SPORTS LIGHT FIXTURE, INSTALL PER MANUFACTURER REQUIREMENTS. TILT ANGLE, MOUNTING HEIGHT AND MOUNTING SHALL BE PER MANUFACTURER. SEE SHEET E8.01, E8.02 AND E8.03 FOR SPORTS LIGHT/POLE QTY, REQUIREMENTS AND EXACT LOCATIONS.
2	MOUNT THE LIGHT ON SPORTS LIGHTING POLE, RUN WIRING UPTO THE FIXTURE
3	PROVIDE (2)12" x12" CONCRETE POLYMER PULLBOXES AT EACH POLE FOR WIRING. FIELD VERIFY EXACT LOCATION.
4	ALL SPORTS LIGHTING CIRCUITS TO GO THRU LIGHTING CONTROL PANEL. PROVIDE ADDITIONAL 1"C AND 0-10V DIMMING WIRING PER POLE FOR SPORTS LIGHTING DIMMING.
5	FARTHEST OUTLET FROM THE MAIN DISTRIBUTION SECTION 'MS2'. %VD=3.80%

WIRE LEGEND

B1	3/4"C-2#8CU LINE+1#10CU GRD-	40A
B2	1"C-4#6CU LINE+1#8CU SHARED GRD-	40A(CKTS)

LIGHTING CONTROL CONDUIT REQUIREMENTS

1. PROVIDE 1"C BETWEEN LIGHTING CONTROL DEVICES INCLUDING BUT NOT LIMITED TO OCCUPANCY SENSORS, DAYLIGHT SENSORS, SWITCHES ETC. PROVIDE CONTROL WIRING PER MFR REQUIREMENTS
2. PROVIDE SEPERATE 3/4"C w/0-10V WIRING WHEREEVER 0-10V DIMMING IS REQUIRED

AGENCY

FLEWELLING & MOODY
architecture planning interiors

HEADQUARTERS OFFICE:
99 S. Lake Avenue, Suite 300
Pasadena, CA 91101
Phone: 323.543.8300
E-Mail: fm-pasadena@flewelling-moody.com

ANTELOPE VALLEY OFFICE:
1035 West Lancaster Boulevard
Lancaster, California 93534
Phone: 661.949.0771
E-Mail: fm-lancaster@flewelling-moody.com

An Employee Owned Corporation

ARCHITECT

CONSULTANT

Budlong
An MBE|SBE|DBE|LSBE Firm
Glendale|Downtown LA|Fremont|Camarillo
WWW.BUDLONG.COM
Job No. 23-140

REGISTERED PROFESSIONAL ENGINEER ALANA M. CHRISTIAN E 22864 07/30/25 ELECTRICAL STATE OF CALIFORNIA

Drawn by: Author

Check by: Checker

Revisions

No.	Date	Description
1	08/27/2025	BID ALTERNATE

All dimensions must be checked at the job by the contractor who accepts full responsibility for their accuracy under the contract. These plans & the specifications in connection therewith have been prepared for a specific site. Any and all responsibility for their use in whole or in part on any other site is hereby disclaimed by Flewelling & Moody.

CITY OF RIDGECREST

SGT. JOHN PINNEY MEMORIAL POOL REPLACEMENT

205 S WARNER ST, RIDGECREST, CA 93555

Drawing Title

ELECTRICAL SITE LIGHTING PLAN ALT 3

Job No. 3055-0000

Sheet No. **E1.02A3**

Date 08/07/2024

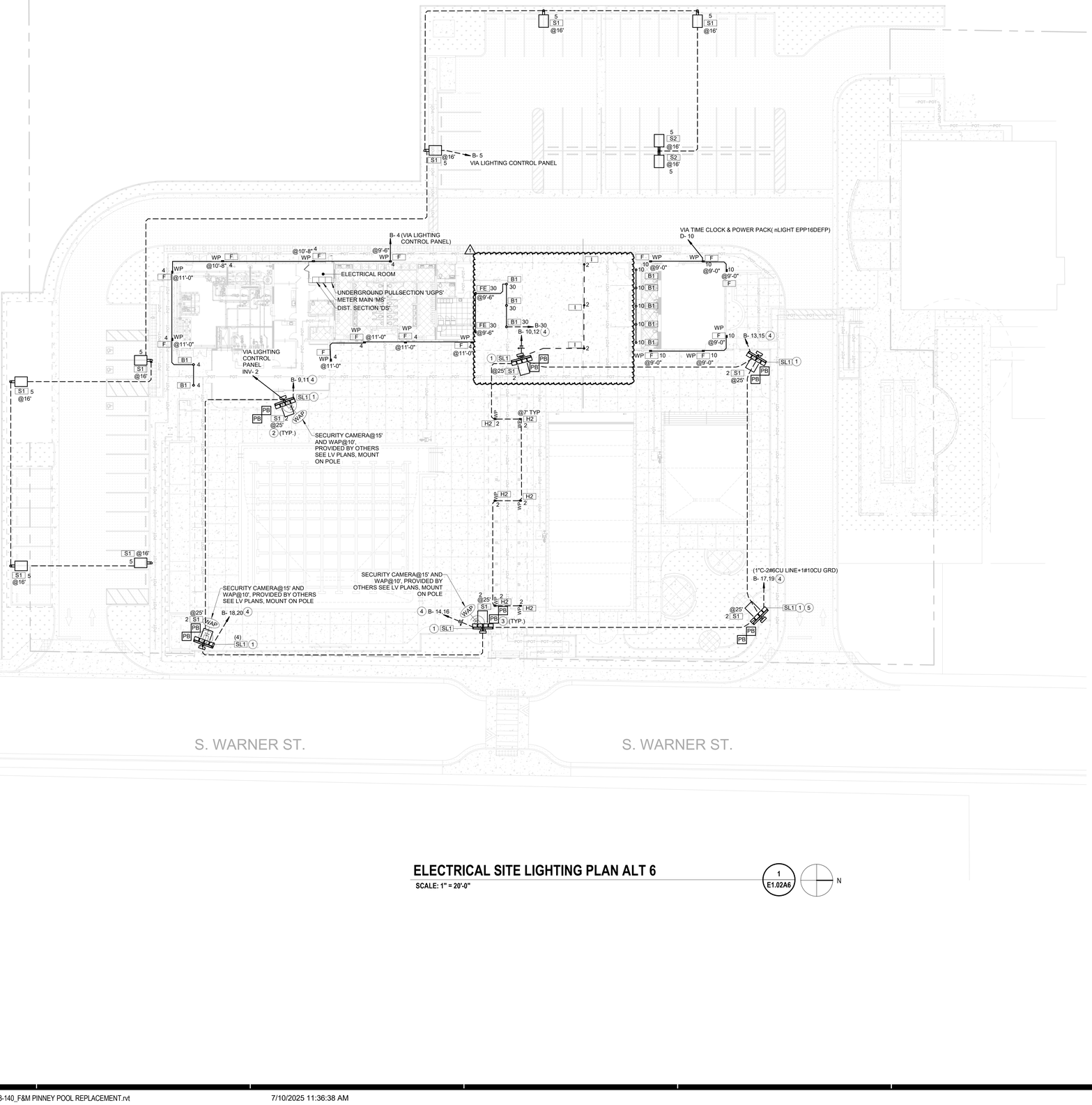

ELECTRICAL SITE LIGHTING PLAN ALT 6

SCALE: 1" = 20'-0"

1 / E1.02A6

N

GENERAL NOTES

1. EMERGENCY LIGHTING TO BE PROVIDED IN CONDUITS/RACEWAYS AND CANT BE MIXED WITH NORMAL LIGHTING IN THE SAME CONDUIT OR RACEWAY
2. ALL ELECTRIC EQ. INSTALLED OUTDOORS INCLUDING BUT NOT LIMITED TO LIGHT FIXTURES, PANELS, TRANSFORMERS, SWITCHBOARD, SHALL BE WEATHER PROOF AND SHALL BE PROTECTED WITH NEMA-3R TYPE, WEATHER PROOF , VANDAL RESISTANT COVERS. ALL OUTDOOR LIGHT FIXTURES SHALL BE WET LISTED
3. ALL UNDERGROUND CONDUITS SHALL BE INSTALLED AT MIN. 24" BELOW FINISHED GRADE UNLESS NOTED OTHERWISE. ALL UTILITY UNDERGROUND CONDUITS SHALL BE INSTALLED PER SERVING UTILITY COMPANY STANDARDS AND DIRECTIONS. CONDUITS TO BE ENCASED IN CONCRETE FOR CONDUITS 2" AND ABOVE. SMALLER CONDUITS CAN BE DIRECTLY BURIED WITH NATIVE EARTH MATERIAL. PROVIDE MIN 6" SOIL BEDDING WHERE CONDUITS ARE DIRECTLY BURIED
4. ALL UNDERGROUND CONDUITS SHALL BE MINIMUM 1" U.O.N, REFER TO ELECTRICAL FRONT SHEET FOR CONDUIT TYPES
5. UNDERGROUND CONDUIT ROUTING IS FOR REFERENCE ONLY. CONTRACTOR SHALL FIELD COORDINATE WITH OTHER TRADES AND FIELD DETERMINE THE EXACT ROUTING. CONTRACTOR SHALL DETERMINE EXISTING CONDUIT/PIPING LOCATIONS AND ROUTE CONDUITS ACCORDINGLY TO AVOID CONFLICTS. ENGINEER IS NOT RESPONSIBLE FOR ANY FIELD ISSUES DUE TO EXISTING CONDUITS/PIPING.
6. PLANS ARE DIAGRAMMATIC AND DO NOT INDICATE THE EXACT QUANTITY OF PULLBOXES, HANDHOLES, J-BOXES. CONTRACTOR MUST PROVIDE AUXILIARY BOXES TO FACILITATE THE INSTALLATION. FOR ELTRICAL POWER DISTRIBUTION NO MORE THAN 360 DEGREE BENDS BETWEEN TWO PULL POINTS(BOXES) PER CEC 346 & FOR DATA/TELECOMM NO MORE THAN 180 DEGREE BENDS BETWEEN TWO PULL POINTS(BOXES) PER EAI/TIA-569
7. CONTRACTOR IS REQUIRED TO SIZE THE PULL BOXES, HANDHOLES AND ALL ELECT ENCLOSURES PER CEC 314. THE DEPTH & WIDTH OF THE PULL BOX SHALL HAVE ENOUGH SPACE TO ACCOMMODATE THE LARGEST SIZE CONDUITS AND RELATED LOCKNUTS, BUSHING AND ALL OTHER ACCESSORIES. PULL BOX SHALL BE DEEPER THAN MIN. COVER DEPTH REQUIRED FOR UNDERGROUND CONDUIT. MIN. COVER DEPTH PER CEC TABLE 300.5
8. ROUTING OF SERVICE CONDUITS AND LOCATION OF UTILITY COMPANY STRUCTURES INDICATED ON SITE PLAN ARE GENERALLY DIAGRAMMATIC. CONTRACTOR MUST OBTAIN FINAL CONSTRUCTION DRAWINGS FROM THE SERVICING UTILITY COMPANIES BEFORE INSTALLATION OF THE ABOVE ITEMS

KEYNOTES

#	
1	SPORTS LIGHT FIXTURE, INSTALL PER MANUFACTURER REQUIREMENTS. TILT ANGLE, MOUNTING HEIGHT AND MOUNTING SHALL BE PER MANUFACTURER. SEE SHEET E8.01, E8.02 AND E8.03 FOR SPORTS LIGHT/POLE QTY, REQUIREMENTS AND EXACT LOCATIONS.
2	MOUNT THE LIGHT ON SPORTS LIGHTING POLE, RUN WIRING UPTO THE FIXTURE
3	PROVIDE (2)12" x12" CONCRETE POLYMER PULLBOXES AT EACH POLE FOR WIRING. FIELD VERIFY EXACT LOCATION.
4	ALL SPORTS LIGHTING CIRCUITS TO GO THRU LIGHTING CONTROL PANEL. PROVIDE ADDITIONAL 1"C AND 0-10V DIMMING WIRING PER POLE FOR SPORTS LIGHTING DIMMING.
5	FARTHEST OUTLET FROM THE MAIN DISTRIBUTION SECTION 'MS2'. %VD=3.80%

WIRE LEGEND

B1	3/4"C-2#8CU LINE+1#10CU GRD-	40A
B2	1"C-4#6CU LINE+1#8CU SHARED GRD-	40A(CKTS)

LIGHTING CONTROL CONDUIT REQUIREMENTS

1. PROVIDE 1"C BETWEEN LIGHTING CONTROL DEVICES INCLUDING BUT NOT LIMITED TO OCCUPANCY SENSORS, DAYLIGHT SENSORS, SWITCHES ETC. PROVIDE CONTROL WIRING PER MFR REQUIREMENTS
2. PROVIDE SEPERATE 3/4"C w/0-10V WIRING WHEREEVER 0-10V DIMMING IS REQUIRED

AGENCY

FLEWELLING & MOODY
architecture planning interiors

HEADQUARTERS OFFICE:
99 S. Lake Avenue, Suite 300
Pasadena, CA 91101
Phone: 323.543.8300
E-Mail: fm-pasadena@flewelling-moody.com

ANTELOPE VALLEY OFFICE:
1035 West Lancaster Boulevard
Lancaster, California 93534
Phone: 661.949.0771
E-Mail: fm-lancaster@flewelling-moody.com

An Employee Owned Corporation

ARCHITECT

CONSULTANT

Budlong
An MBE|SBE|DBE|LSBE Firm
Glendale|Downtown LA|Fremont|Camarillo
W W W . B U D L O N G . C O M
Job No. 23-140

REGISTERED PROFESSIONAL ENGINEER MARK R. CHRISTIAN No. EE 22864 ELECTRICAL STATE OF CALIFORNIA

Drawn by: Author

Check by: Checker

Revisions

No.	Date	Description
	01/26/24	100% DD
	03/01/24	50% CD
	05/09/24	90% CD
	08/05/24	100% CD
	11/25/24	100% CD V2
	01/31/25	100% CD V3
1	08/27/2025	BID ALTERNATE

All dimensions must be checked at the job by the contractor who accepts full responsibility for their accuracy under the contract. These plans & the specifications in connection therewith have been prepared for a specific site. Any and all responsibility for their use in whole or in part on any other site is hereby disclaimed by Flewelling & Moody.

CITY OF RIDGECREST

SGT. JOHN PINNEY MEMORIAL POOL REPLACEMENT

205 S WARNER ST, RIDGECREST, CA 93555

Drawing Title

ELECTRICAL SITE LIGHTING PLAN ALT 6

Job No. 3055-0000

Date 08/07/2024

Sheet No. **E1.02A6**

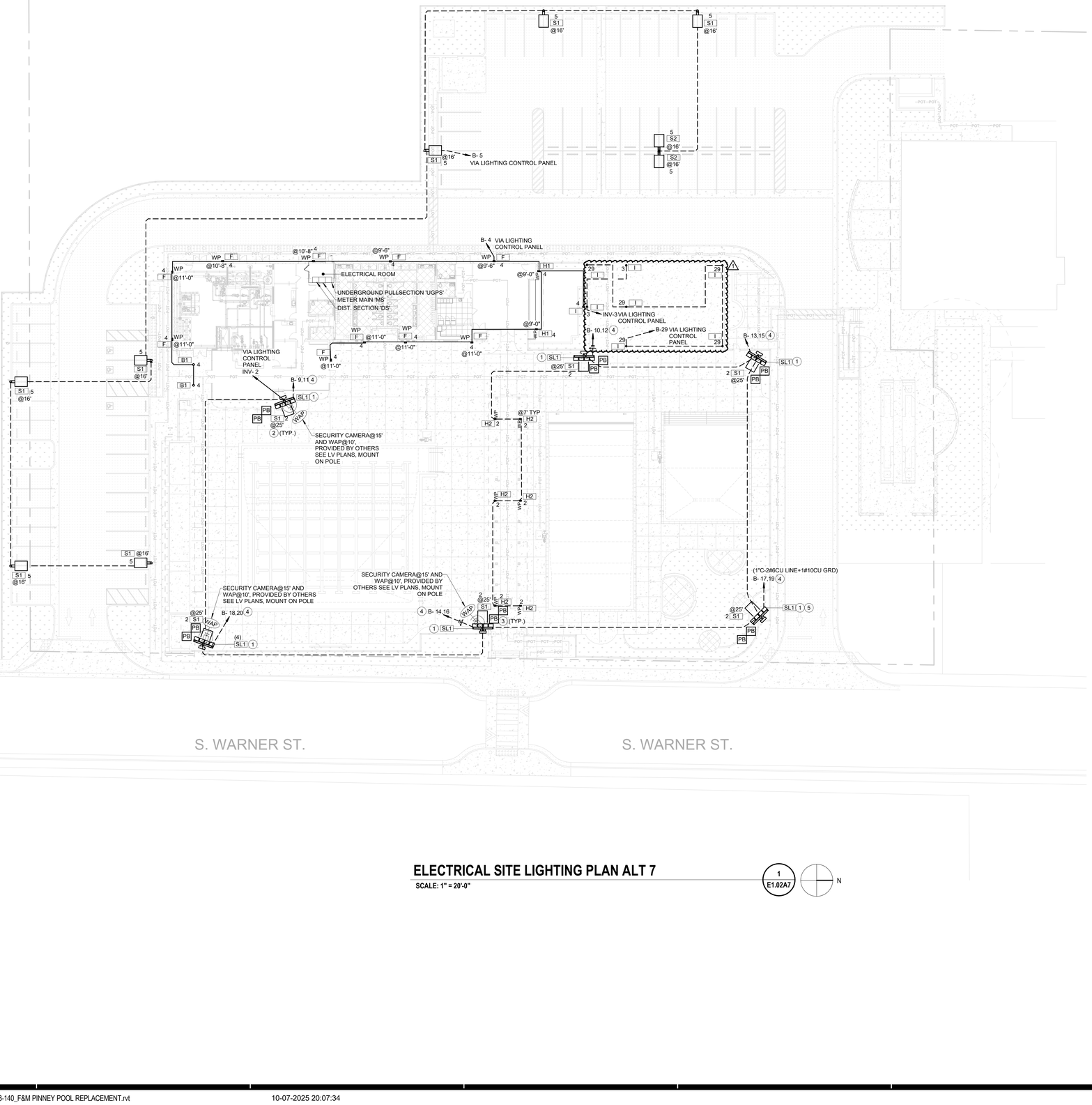

ELECTRICAL SITE LIGHTING PLAN ALT 7

SCALE: 1" = 20'-0"

1 / E1.02A7

N

GENERAL NOTES

1. EMERGENCY LIGHTING TO BE PROVIDED IN CONDUITS/RACEWAYS AND CANT BE MIXED WITH NORMAL LIGHTING IN THE SAME CONDUIT OR RACEWAY
2. ALL ELECTRIC EQ. INSTALLED OUTDOORS INCLUDING BUT NOT LIMITED TO LIGHT FIXTURES, PANELS, TRANSFORMERS, SWITCHBOARD, SHALL BE WEATHER PROOF AND SHALL BE PROTECTED WITH NEMA-3R TYPE, WEATHER PROOF, VANDAL RESISTANT COVERS. ALL OUTDOOR LIGHT FIXTURES SHALL BE WET LISTED
3. ALL UNDERGROUND CONDUITS SHALL BE INSTALLED AT MIN. 24" BELOW FINISHED GRADE UNLESS NOTED OTHERWISE. ALL UTILITY UNDERGROUND CONDUITS SHALL BE INSTALLED PER SERVING UTILITY COMPANY STANDARDS AND DIRECTIONS. CONDUITS TO BE ENCASED IN CONCRETE FOR CONDUITS 2" AND ABOVE. SMALLER CONDUITS CAN BE DIRECTLY BURIED WITH NATIVE EARTH MATERIAL. PROVIDE MIN 6" SOIL BEDDING WHERE CONDUITS ARE DIRECTLY BURIED
4. ALL UNDERGROUND CONDUITS SHALL BE MINIMUM 1" U.O.N, REFER TO ELECTRICAL FRONT SHEET FOR CONDUIT TYPES
5. UNDERGROUND CONDUIT ROUTING IS FOR REFERENCE ONLY. CONTRACTOR SHALL FIELD COORDINATE WITH OTHER TRADES AND FIELD DETERMINE THE EXACT ROUTING. CONTRACTOR SHALL DETERMINE EXISTING CONDUIT/PIPING LOCATIONS AND ROUTE CONDUITS ACCORDINGLY TO AVOID CONFLICTS. ENGINEER IS NOT RESPONSIBLE FOR ANY FIELD ISSUES DUE TO EXISTING CONDUITS/PIPING.
6. PLANS ARE DIAGRAMMATIC AND DO NOT INDICATE THE EXACT QUANTITY OF PULLBOXES, HANDHOLES, J-BOXES. CONTRACTOR MUST PROVIDE AUXILIARY BOXES TO FACILITATE THE INSTALLATION. FOR ELECTRICAL POWER DISTRIBUTION NO MORE THAN 360 DEGREE BENDS BETWEEN TWO PULL POINTS(BOXES) PER CEC 346 & FOR DATA/TELECOMM NO MORE THAN 180 DEGREE BENDS BETWEEN TWO PULL POINTS(BOXES) PER EAI/TIA-569
7. CONTRACTOR IS REQUIRED TO SIZE THE PULL BOXES, HANDHOLES AND ALL ELECT ENCLOSURES PER CEC 314. THE DEPTH & WIDTH OF THE PULL BOX SHALL HAVE ENOUGH SPACE TO ACCOMMODATE THE LARGEST SIZE CONDUITS AND RELATED LOCKNUTS, BUSHING AND ALL OTHER ACCESSORIES. PULL BOX SHALL BE DEEPER THAN MIN. COVER DEPTH REQUIRED FOR UNDERGROUND CONDUIT. MIN. COVER DEPTH PER CEC TABLE 300.5
8. ROUTING OF SERVICE CONDUITS AND LOCATION OF UTILITY COMPANY STRUCTURES INDICATED ON SITE PLAN ARE GENERALLY DIAGRAMMATIC. CONTRACTOR MUST OBTAIN FINAL CONSTRUCTION DRAWINGS FROM THE SERVICING UTILITY COMPANIES BEFORE INSTALLATION OF THE ABOVE ITEMS

KEYNOTES

#	
1	SPORTS LIGHT FIXTURE, INSTALL PER MANUFACTURER REQUIREMENTS. TILT ANGLE, MOUNTING HEIGHT AND MOUNTING SHALL BE PER MANUFACTURER. SEE SHEET E8.01, E8.02 AND E8.03 FOR SPORTS LIGHT/POLE QTY, REQUIREMENTS AND EXACT LOCATIONS.
2	MOUNT THE LIGHT ON SPORTS LIGHTING POLE, RUN WIRING UPTO THE FIXTURE
3	PROVIDE (2)12" x12" CONCRETE POLYMER PULLBOXES AT EACH POLE FOR WIRING. FIELD VERIFY EXACT LOCATION.
4	ALL SPORTS LIGHTING CIRCUITS TO GO THRU LIGHTING CONTROL PANEL. PROVIDE ADDITIONAL 1"C AND 0-10V DIMMING WIRING PER POLE FOR SPORTS LIGHTING DIMMING.
5	FARTHEST OUTLET FROM THE MAIN DISTRIBUTION SECTION 'MS2'. %VD=3.80%

WIRE LEGEND

B1	3/4"C-2#8CU LINE+1#10CU GRD-	40A
B2	1"C-4#6CU LINE+1#8CU SHARED GRD-	40A(CKTS)

LIGHTING CONTROL CONDUIT REQUIREMENTS

1. PROVIDE 1"C BETWEEN LIGHTING CONTROL DEVICES INCLUDING BUT NOT LIMITED TO OCCUPANCY SENSORS, DAYLIGHT SENSORS, SWITCHES ETC. PROVIDE CONTROL WIRING PER MFR REQUIREMENTS
2. PROVIDE SEPERATE 3/4"C w/0-10V WIRING WHEREEVER 0-10V DIMMING IS REQUIRED

AGENCY

FLEWELLING & MOODY
architecture planning interiors

HEADQUARTERS OFFICE:
99 S. Lake Avenue, Suite 300
Pasadena, CA 91101
Phone: 323.543.8300
E-Mail: fm-pasadena@flewelling-moody.com

ANTELOPE VALLEY OFFICE:
1035 West Lancaster Boulevard
Lancaster, California 93534
Phone: 661.949.0771
E-Mail: fm-lancaster@flewelling-moody.com

An Employee Owned Corporation

ARCHITECT

CONSULTANT

Budlong
An MBE|SBE|DBE|LSBE Firm
Glendale|Downtown LA|Fremont|Camarillo
W W W . B U D L O N G . C O M
Job No. 23-140

REGISTERED PROFESSIONAL ENGINEER MARK R. CHRISTIAN No. EE 22864 ELECTRICAL STATE OF CALIFORNIA

Drawn by: Author

Check by: Checker

Revisions

No.	Date	Description
	01/26/24	100% DD
	03/01/24	50% CD
	05/09/24	90% CD
	08/05/24	100% CD
	11/25/24	100% CD V2
	01/31/25	100% CD V3
1	08/27/2025	BID ALTERNATE

All dimensions must be checked at the job by the contractor who accepts full responsibility for their accuracy under the contract. These plans & the specifications in connection therewith have been prepared for a specific site. Any and all responsibility for their use in whole or in part on any other site is hereby disclaimed by Flewelling & Moody.

CITY OF RIDGECREST

SGT. JOHN PINNEY MEMORIAL POOL REPLACEMENT

205 S WARNER ST, RIDGECREST, CA 93555

Drawing Title

ELECTRICAL SITE LIGHTING PLAN ALT 7

Job No. 3055-0000

Date 08/07/2024

Sheet No. **E1.02A7**

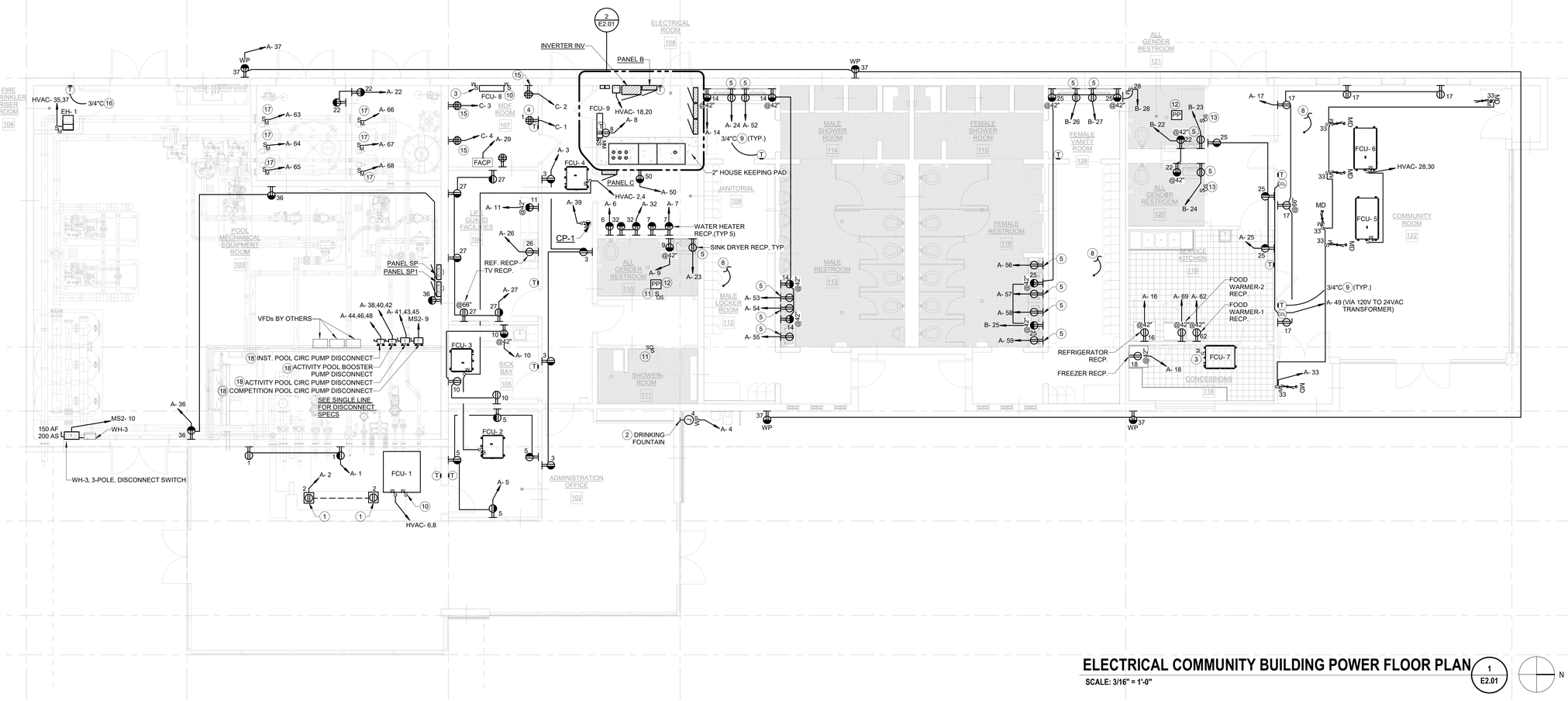

ELECTRICAL COMMUNITY BUILDING POWER FLOOR PLAN

SCALE: 3/16" = 1'-0"

1 / E2.01

ENLARGED ELECTRICAL ROOM POWER PLAN

SCALE: 3/8" = 1'-0"

2 / E2.01

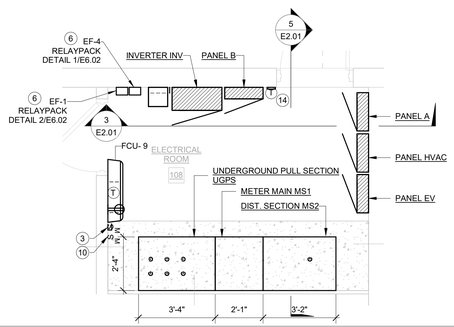

ELECT RM SECTION-3

SCALE: 3/8" = 1'-0"

5 / E2.01

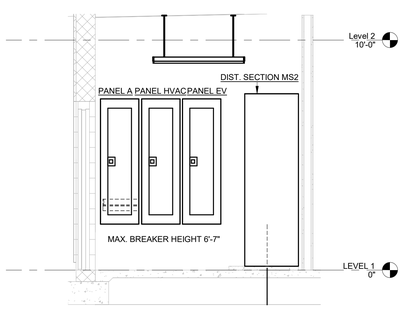

ELECT RM SECTION-2

SCALE: 3/8" = 1'-0"

4 / E2.01

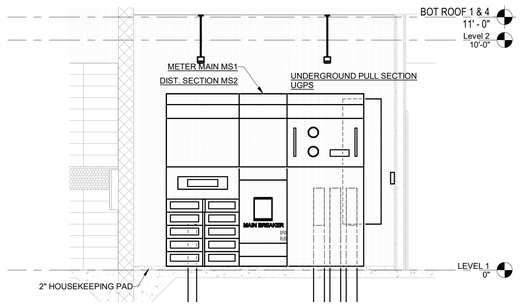

ELECT RM SECTION-1

SCALE: 3/8" = 1'-0"

3 / E2.01

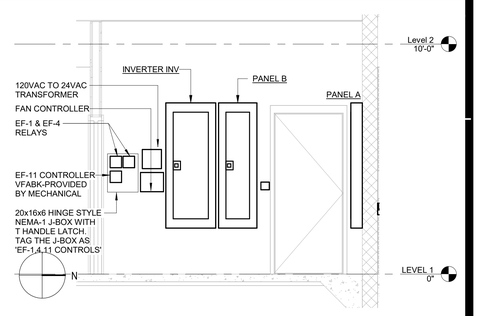

GENERAL NOTES

1. MARK ALL JUNCTION BOXES, RECEPTACLES WITH PANEL AND CIRCUIT NUMBERS
2. PROVIDE 3/4"C FROM FAN COIL TO ASSOCIATED THERMOSTATS AND OUTDOOR UNITS FOR CONTROLS PURPOSE, PROVIDE CONTROLS CABLING PER MFR REQUIREMENTS
3. ALL J-BOXES, CONTROLLERS, MOTOR RATED SWITCHES AND OTHER ELECT. EQ LOCATED IN CEILING OR WALL CAVITIES SHALL BE ACCESSIBLE BY AN ACCESS PANEL OR OTHER APPROVED MEANS. MIN. ACCESS PANEL SIZE FOR A MOTOR RATED SWITCH 6x6
4. ALL OUTDOOR RECEPTACLES SHALL BE GFCI TYPE AND SHALL BE PROVIDED WITH WEATHER PROTECTIVE COVERS
5. ALL OUTDOOR EQ. SHALL BE NEMA-3R TYPE
6. WIRING FOR POWER PLANS IS DIAGRAMMATIC AND ONLY INDICATES CIRCUITING, CONTRACTOR MUST FIELD DETERMINE THE MOST APPROPIATE MEANS METHOD OF WIRING AND PROVIDE ALL REQUIRED ACCESSORIES FOR A FULLY OPERATIONAL SYSTEM
7. ALL CONDUITS SHALL BE CONCEALED EXCEPT WITHIN ELECTRICAL ROOM

KEYNOTES

1	ELECTRICAL FLOOR BOX. (2)POWER, (2)DATA OUTLETS. PROVIDE WITH THE BOX WITH COVER, COVER TO BE FLUSHED WITH FLOOR. REFER TO LOW VOLTAGE PLAN FOR DATA CONDUIT AND WIRING REQUIREMENTS
2	NEMA-3R, WEATHERPROOF J-BOX FOR DRINKING FOUNTAIN POWER. BRAEKER FEEDING DRINKING FOUNTAIN SHALL BE PROVIDED WITH A LOCK-ON DEVICE
3	INDOOR UNIT IS POWERED BY THE OUTDOOR UNIT. PROVIDE A 15A/2P, 208V MOTOR RATED SWITCH AND RUN 3/4"C-2#12CU LINE+1#12CU GRD IN BETWEEN INDOOR AND OUTDOOR UNIT. PROVIDE SEPERATE 3/4"C FOR ANY REQUIRED CONTROL WIRING
4	LOW VOLTAGE UTILITY POWER SUPPLY, FIELD VERIFY EXACT LOCATION
5	NEMA 5-15R UNDER COUNTER DEDICATED RECEPTACLE FOR SINK DRYER CONNECTION, FIELD VERIFY EXACT LOCATION
6	RELAY FOR EXHAUST FAN CONTROL. LOCATE RELAY INSIDE A 20x16x6 NEMA-1 J-BOX, J-BOX TO BE HINGED-COVER TYPE, PROVIDE WITH A THANDLE LATCH KIT. REFER TO DETAIL SHEET FOR SPECS AND WIRING DIAGRAM
7	FAN CONTROL INTERFACE TO INTERLOCK EF-4 AND FCU-3. REFER TO DETAIL SHEET FOR SPECS AND WIRING DIAGRAM
8	(1)1" CONDUIT FROM MDF ROOM FOR FUTURE SPEAKER. FIELD VERIFY THE EXACT TERMINATION LOCATION.
9	3/4"C FROM ALL THERMOSTATS TO EACH RESPECTIVE INDOOR AND OUTDOOR UNIT(DAISY CHAIN INDOOR UNIT, OUTDOOR UNIT AND RESPECTIVE THERMOSTAT). IN ADDITION FOR MULTIZONE VRF SYSTEMS DAISY CHAIN ALL INDOOR AND OUTDOOR UNITS WITH 3/4"C. CONTROLS WIRING AS REQUIRED PER MFR. FIELD COORDINATE ALL CONTROLS REQUIREMENTS WITH MECHANICAL CONTRACTOR
10	CONDENSATE PUMP MOTOR-RATED SWITCH, 208V. CONNECT PER MFR INSTALLATION INSTRUCTION, PROVIDE 3/4"C-2#12CU+1#12CU GRD
11	LIGHTING OCCUPANCY SENSOR SWITCH TO CONTROL THE FAN EF-2
12	PROVIDE ADDITIONAL OCCUPANCY SENSING POWER PACK FOR FAN CONTROL. POWER PACK TO BE PROVIDED BY LIGHTING CONTROL VENDOR.
13	LIGHTING OCCUPANCY SENSOR SWITCH TO CONTROL THE FAN EF-8
14	PROVIDE A CONDUIT AND WIRING BETWEEN EXHAUST FAN CONTROLLER, VFABK AND EXHAUST FAN. REFER TO THE WIRING DIAGRAM SHOWN ON SHEET E6.02
15	RECEPTACLE OUTLET FOR IDF/LV/AV RACKS , FIELD COORDINATE THE EXACT LOCATION AND HEIGHT OF RECEPTACLE WITH LV/AC CONTRACTOR
16	PROVIDE A 3/4"C FOR HEATER THERMOSTAT WIRING. WIRING PER MANUFACTURER'S REQUIREMENT.
17	CEILING MOUNTED 120VAC, 20AMP, MOTOR-RATED SWITCH FOR METERING PUMP. PROVIDE LIQUID TIGHT FLEX CONDUIT WITH WIRING UPTO METERING PUMP.
18	MOUNT DISCONNECT SWITCH USING UNISTRUT

AGENCY

REVIEWED FOR CODE COMPLIANCE BY: WILLDAN ENGINEERING

Approval of these plans & specifications shall not be construed to be a permit for, or an approval of any violation of any Federal, State, County or City laws or ordinances. One set of approved plans must be kept on the job until completion.

10:06:28 AM Jul 21, 2025

FLEWELLING & MOODY
architecture planning interiors

HEADQUARTERS OFFICE:
99 S. Lake Avenue, Suite 300
Pasadena, CA 91101
Phone: 323.543.8300
E-Mail: fm-pasadena@flewelling-moody.com

ANTELOPE VALLEY OFFICE:
1035 West Lancaster Boulevard
Lancaster, California 93534
Phone: 661.949.0771
E-Mail: fm-lancaster@flewelling-moody.com

An Employee Owned Corporation

ARCHITECT

CONSULTANT

Budlong
An MBE|SBE|DBE|LSBE Firm
Glendale|Downtown LA|Fremont|Camarillo
W W W . B U D L O N G . C O M
Job No. 23-140

REGISTERED PROFESSIONAL ENGINEER — JAMES H. CHRISTIAN — No. E 22864 — 12/20/25 — ELECTRICAL — STATE OF CALIFORNIA

Drawn by: Author

Check by: Checker

Revisions

No.	Date	Description
	01/26/24	100% DD
	03/01/24	50% CD
	05/09/24	90% CD
	08/05/24	100% CD
	11/25/24	100% CD V2
	01/31/25	100% CD V3
	12/17/24	PC CHANGES

All dimensions must be checked at the job by the contractor who accepts full responsibility for their accuracy under the contract. These plans & the specifications in connection therewith have been prepared for a specific site. Any and all responsibility for their use in whole or in part on any other site is hereby disclaimed by Flewelling & Moody.

CITY OF RIDGECREST

SGT. JOHN PINNEY MEMORIAL POOL REPLACEMENT

205 S WARNER ST, RIDGECREST, CA 93555

Drawing Title

ELECTRICAL COMMUNITY BUILDING POWER FLOOR PLAN

Job No. 3055-0100

Sheet No. **E2.01**

Date 05/09/2025

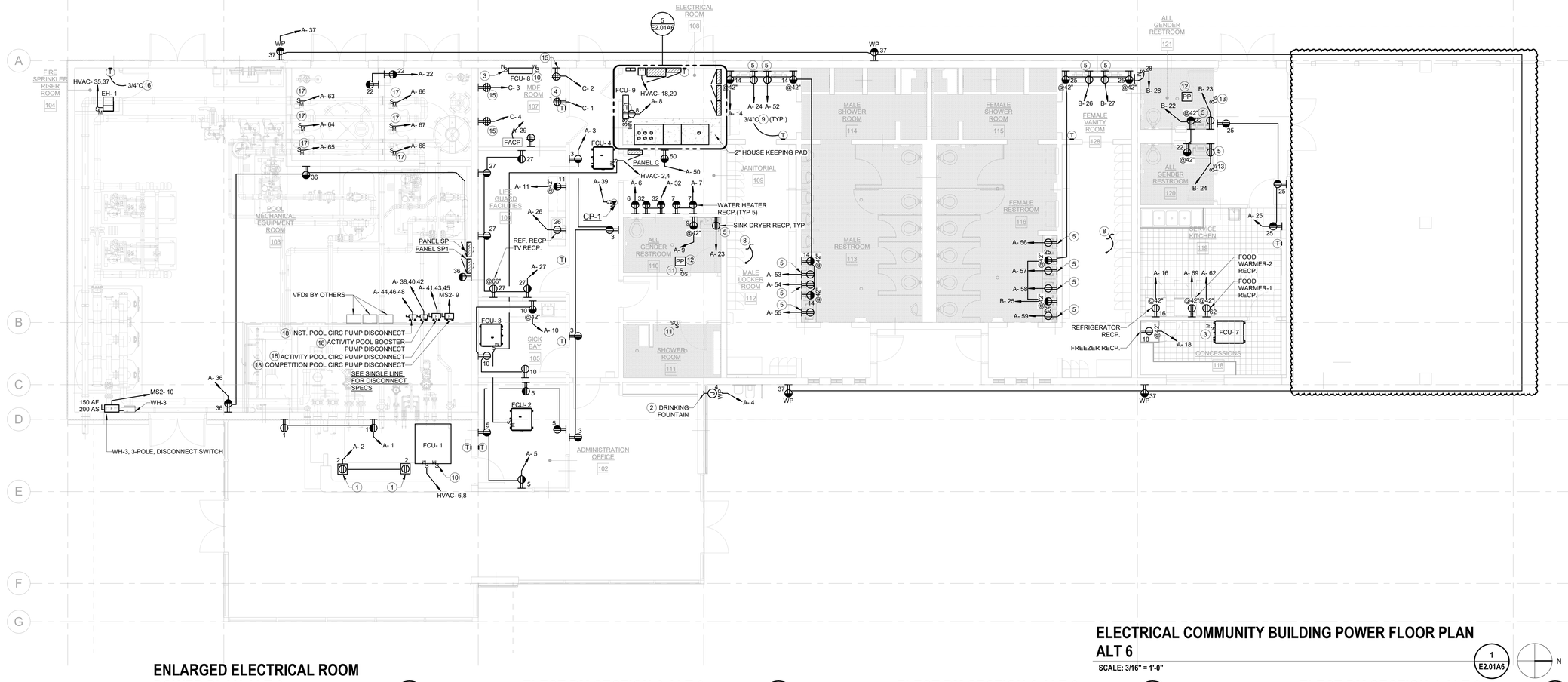

ENLARGED ELECTRICAL ROOM POWER PLAN ALT 6

SCALE: 3/8" = 1'-0"

5 E2.01A6

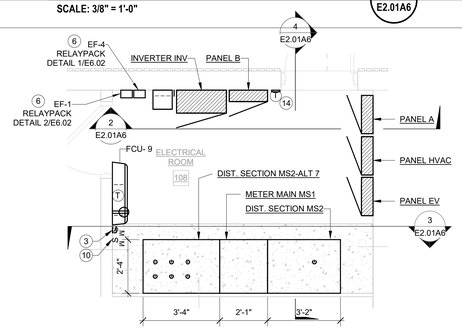

ELECT RM SECTION-3 ALT 6

SCALE: 3/8" = 1'-0"

4 E2.01A6

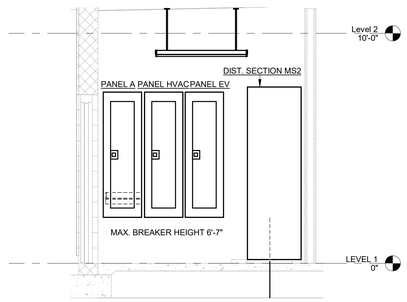

ELECT RM SECTION-2 ALT 6

SCALE: 3/8" = 1'-0"

3 E2.01A6

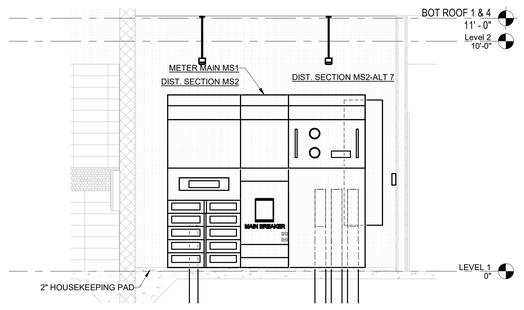

ELECT RM SECTION-1 ALT 6

SCALE: 3/8" = 1'-0"

2 E2.01A6

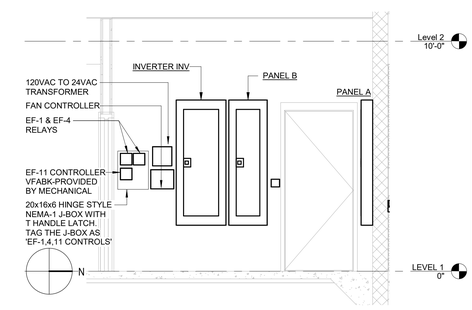

ELECTRICAL COMMUNITY BUILDING POWER FLOOR PLAN ALT 6

SCALE: 3/16" = 1'-0"

1 E2.01A6

GENERAL NOTES

1. MARK ALL JUNCTION BOXES, RECEPTACLES WITH PANEL AND CIRCUIT NUMBERS
2. PROVIDE 3/4"C FROM FAN COIL TO ASSOCIATED THERMOSTATS AND OUTDOOR UNITS FOR CONTROLS PURPOSE, PROVIDE CONTROLS CABLING PER MFR REQUIREMENTS
3. ALL J-BOXES, CONTROLLERS, MOTOR RATED SWITCHES AND OTHER ELECT. EQ LOCATED IN CEILING OR WALL CAVITIES SHALL BE ACCESSIBLE BY AN ACCESS PANEL OR OTHER APPROVED MEANS. MIN. ACCESS PANEL SIZE FOR A MOTOR RATED SWITCH 6x6
4. ALL OUTDOOR RECEPTACLES SHALL BE GFCI TYPE AND SHALL BE PROVIDED WITH WEATHER PROTECTIVE COVERS
5. ALL OUTDOOR EQ. SHALL BE NEMA-3R TYPE
6. WIRING FOR POWER PLANS IS DIAGRAMMATIC AND ONLY INDICATES CIRCUITING, CONTRACTOR MUST FIELD DETERMINE THE MOST APPROPIATE MEANS METHOD OF WIRING AND PROVIDE ALL REQUIRED ACCESSORIES FOR A FULLY OPERATIONAL SYSTEM
7. ALL CONDUITS SHALL BE CONCEALED EXCEPT WITHIN ELECTRICAL ROOM

KEYNOTES

1	ELECTRICAL FLOOR BOX. (2)POWER, (2)DATA OUTLETS. PROVIDE WITH THE BOX WITH COVER, COVER TO BE FLUSHED WITH FLOOR. REFER TO LOW VOLTAGE PLAN FOR DATA CONDUIT AND WIRING REQUIREMENTS
2	NEMA-3R, WEATHERPROOF J-BOX FOR DRINKING FOUNTAIN POWER. BRAEKER FEEDING DRINKING FOUNTAIN SHALL BE PROVIDED WITH A LOCK-ON DEVICE
3	INDOOR UNIT IS POWERED BY THE OUTDOOR UNIT. PROVIDE A 15A/2P, 208V MOTOR RATED SWITCH AND RUN 3/4"C-2#12CU LINE+1#12CU GRD IN BETWEEN INDOOR AND OUTDOOR UNIT. PROVIDE SEPERATE 3/4"C FOR ANY REQUIRED CONTROL WIRING
4	LOW VOLTAGE UTILITY POWER SUPPLY, FIELD VERIFY EXACT LOCATION
5	NEMA 5-15R UNDER COUNTER DEDICATED RECEPTACLE FOR SINK DRYER CONNECTION, FIELD VERIFY EXACT LOCATION
6	RELAY FOR EXHAUST FAN CONTROL. LOCATE RELAY INSIDE A 20x16x6 NEMA-1 J-BOX, J-BOX TO BE HINGED-COVER TYPE, PROVIDE WITH A THANDLE LATCH KIT. REFER TO DETAIL SHEET FOR SPECS AND WIRING DIAGRAM
7	FAN CONTROL INTERFACE TO INTERLOCK EF-4 AND FCU-3. REFER TO DETAIL SHEET FOR SPECS AND WIRING DIAGRAM
8	(1)1" CONDUIT FROM MDF ROOM FOR FUTURE SPEAKER. FIELD VERIFY THE EXACT TERMINATION LOCATION.
9	3/4"C FROM ALL THERMOSTATS TO EACH RESPECTIVE INDOOR AND OUTDOOR UNIT(DAISY CHAIN INDOOR UNIT, OUTDOOR UNIT AND RESPECTIVE THERMOSTAT). IN ADDITION FOR MULTIZONE VRF SYSTEMS DAISY CHAIN ALL INDOOR AND OUTDOOR UNITS WITH 3/4"C. CONTROLS WIRING AS REQUIRED PER MFR. FIELD COORDINATE ALL CONTROLS REQUIREMENTS WITH MECHANICAL CONTRACTOR
10	CONDENSATE PUMP MOTOR-RATED SWITCH, 208V. CONNECT PER MFR INSTALLATION INSTRUCTION, PROVIDE 3/4"C-2#12CU+1#12CU GRD
11	LIGHTING OCCUPANCY SENSOR SWITCH TO CONTROL THE FAN EF-2
12	PROVIDE ADDITIONAL OCCUPANCY SENSING POWER PACK FOR FAN CONTROL. POWER PACK TO BE PROVIDED BY LIGHTING CONTROL VENDOR.
13	LIGHTING OCCUPANCY SENSOR SWITCH TO CONTROL THE FAN EF-8
14	PROVIDE A CONDUIT AND WIRING BETWEEN EXHAUST FAN CONTROLLER, VFABK AND EXHAUST FAN. REFER TO THE WIRING DIAGRAM SHOWN ON SHEET E6.02
15	RECEPTACLE OUTLET FOR IDF/LV/AV RACKS , FIELD COORDINATE THE EXACT LOCATION AND HEIGHT OF RECEPTACLE WITH LV/AC CONTRACTOR
16	PROVIDE A 3/4"C FOR HEATER THERMOSTAT WIRING. WIRING PER MANUFACTURER'S REQUIREMENT.
17	CEILING MOUNTED 120VAC, 20AMP, MOTOR-RATED SWITCH FOR METERING PUMP. PROVIDE LIQUID TIGHT FLEX CONDUIT WITH WIRING UPTO METERING PUMP.
18	MOUNT DISCONNECT SWITCH USING UNISTRUT

AGENCY

FLEWELLING & MOODY
architecture planning interiors

HEADQUARTERS OFFICE:
99 S. Lake Avenue, Suite 300
Pasadena, CA 91101
Phone: 323.543.8300
E-Mail: fm-pasadena@flewelling-moody.com

ANTELOPE VALLEY OFFICE:
1035 West Lancaster Boulevard
Lancaster, California 93534
Phone: 661.949.0771
E-Mail: fm-lancaster@flewelling-moody.com

An Employee Owned Corporation

ARCHITECT

CONSULTANT

Budlong
An MBE|SBE|DBE|LSBE Firm
Glendale|Downtown LA|Fremont|Camarillo
W W W . B U D L O N G . C O M
Job No. 23-140

REGISTERED PROFESSIONAL ENGINEER MARK H. CHRISTIAN RCE 22864 07/2025 ELECTRICAL STATE OF CALIFORNIA

Drawn by: Author

Check by: Checker

Revisions

No.	Date	Description
	01/26/24	100% DD
	03/01/24	50% CD
	05/09/24	90% CD
	08/05/24	100% CD
	11/25/24	100% CD V2
	01/31/25	100% CD V3
	12/17/24	PC CHANGES
1	08/27/2025	BID ALTERNATE

All dimensions must be checked at the job by the contractor who accepts full responsibility for their accuracy under the contract. These plans & the specifications in connection therewith have been prepared for a specific site. Any and all responsibility for their use in whole or in part on any other site is hereby disclaimed by Flewelling & Moody.

CITY OF RIDGECREST

SGT. JOHN PINNEY MEMORIAL POOL REPLACEMENT

205 S WARNER ST, RIDGECREST, CA 93555

Drawing Title

ELECTRICAL COMMUNITY BUILDING POWER FLOOR PLAN ALT 6

Job No. 3055-0000

Sheet No. **E2.01A6**

Date 08/07/2024

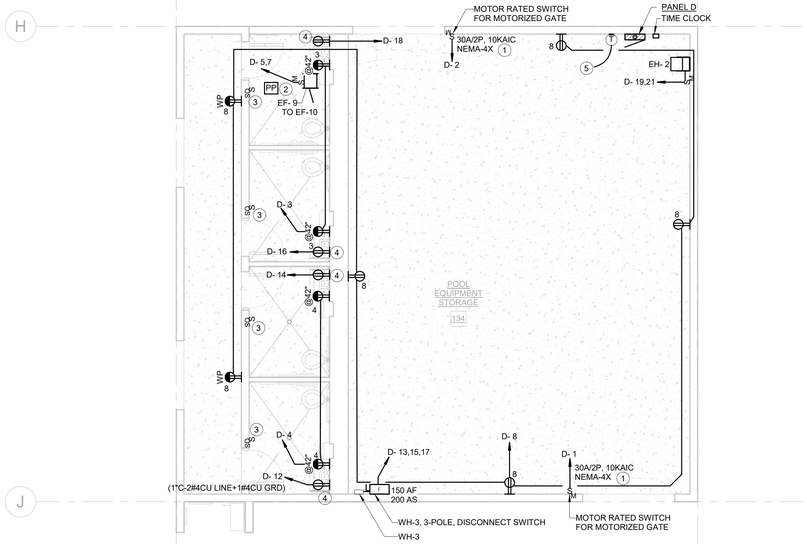

ELECTRICAL EQUIPMENT STORAGE POWER FLOOR PLAN

SCALE: 3/16" = 1'-0"

1 / E2.02

N

GENERAL NOTES

1. MARK ALL JUNCTION BOXES, RECEPTACLES WITH PANEL AND CIRCUIT NUMBERS
2. PROVIDE 3/4"C FROM FAN COIL TO ASSOCIATED THERMOSTATS AND OUTDOOR UNITS FOR CONTROLS PURPOSE, PROVIDE CONTROLS CABLING PER MFR REQUIREMENTS
3. ALL J-BOXES, CONTROLLERS, MOTOR RATED SWITCHES AND OTHER ELECT. EQ LOCATED IN CEILING OR WALL CAVITIES SHALL BE ACCESSIBLE BY AN ACCESS PANEL OR OTHER APPROVED MEANS. MIN. ACCESS PANEL SIZE FOR A MOTOR RATED SWITCH 6x6
4. ALL OUTDOOR RECEPTACLES SHALL BE GFCI TYPE AND SHALL BE PROVIDED WITH WEATHER PROTECTIVE COVERS
5. ALL OUTDOOR EQ. SHALL BE NEMA-3R TYPE
6. WIRING FOR POWER PLANS IS DIAGRAMMATIC AND ONLY INDICATES CIRCUITING, CONTRACTOR MUST FIELD DETERMINE THE MOST APPROPIATE MEANS METHOD OF WIRING AND PROVIDE ALL REQUIRED ACCESSORIES FOR A FULLY OPERATIONAL SYSTEM
7. ALL CONDUITS SHALL BE CONCEALED EXCEPT WITHIN ELECTRICAL ROOM

KEYNOTES

1	USE LEVITON MS4X-302 OR APPROVED EQUAL
2	PROVIDE ADDITONAL OCCUPANCY SENSING POWER PACK FOR FAN CONTROL. POWER PACK TO BE PROVIDED BY LIGHTING CONTROL VENDOR.
3	LIGHTING OCCUPANCY SENSOR SWITCH TO CONTROL EF-9
4	NEMA 5-15R UNDER COUNTER DEDICATED RECEPTACLE FOR SINK DRYER CONNECTION, FIELD VERIFY EXACT LOCATION
5	PROVIDE A 3/4"C FOR HEATER THERMOSTAT WIRING. WIRING PER MANUFACTURER'S REQUIREMENT.

AGENCY

REVIEWED FOR CODE COMPLIANCE BY: WILLDAN ENGINEERING

Approval of these plans & specifications shall not be construed to be a permit for, or an approval of any violation of any Federal, State, County or City laws or ordinances. One set of approved plans must be kept on the job until completion.

10:06:30 AM Jul 21, 2025

FLEWELLING & MOODY
architecture planning interiors

HEADQUARTERS OFFICE:
99 S. Lake Avenue, Suite 300
Pasadena, CA 91101
Phone: 323.543.8300
E-Mail: fm-pasadena@flewelling-moody.com

ANTELOPE VALLEY OFFICE:
1035 West Lancaster Bouldvard
Lancaster, California 93534
Phone: 661.949.0771
E-Mail: fm-lancaster@flewelling-moody.com

An Employee Owned Corporation

ARCHITECT

CONSULTANT

Budlong
An MBE|SBE|DBE|LSBE Firm
Glendale|Downtown LA|Fremont|Camarillo
W W W . B U D L O N G . C O M
Job No. 23-140

REGISTERED PROFESSIONAL ENGINEER — MARK H. CHRISTIAN — E 22864 — 07/30/25 — ELECTRICAL — STATE OF CALIFORNIA

Drawn by: Author

Check by: Checker

Revisions

No.	Date	Description
	01/26/24	100% DD
	03/01/24	50% CD
	05/09/24	90% CD
	08/05/24	100% CD
	11/25/24	100% CD V2
	01/31/25	100% CD V3
	12/17/24	PC CHANGES

All dimensions must be checked at the job by the contractor who accepts full responsibility for their accuracy under the contract. These plans & the specifications in connection therewith have been prepared for a specific site. Any and all responsibility for their use in whole or in part on any other site is hereby disclaimed by Flewelling & Moody.

CITY OF RIDGECREST

SGT. JOHN PINNEY MEMORIAL POOL REPLACEMENT

205 S WARNER ST, RIDGECREST, CA 93555

Drawing Title

ELECTRICAL EQUIPMENT STORAGE POWER FLOOR PLAN

Job No. 3055-0100

Sheet No. **E2.02**

Date 05/09/2025

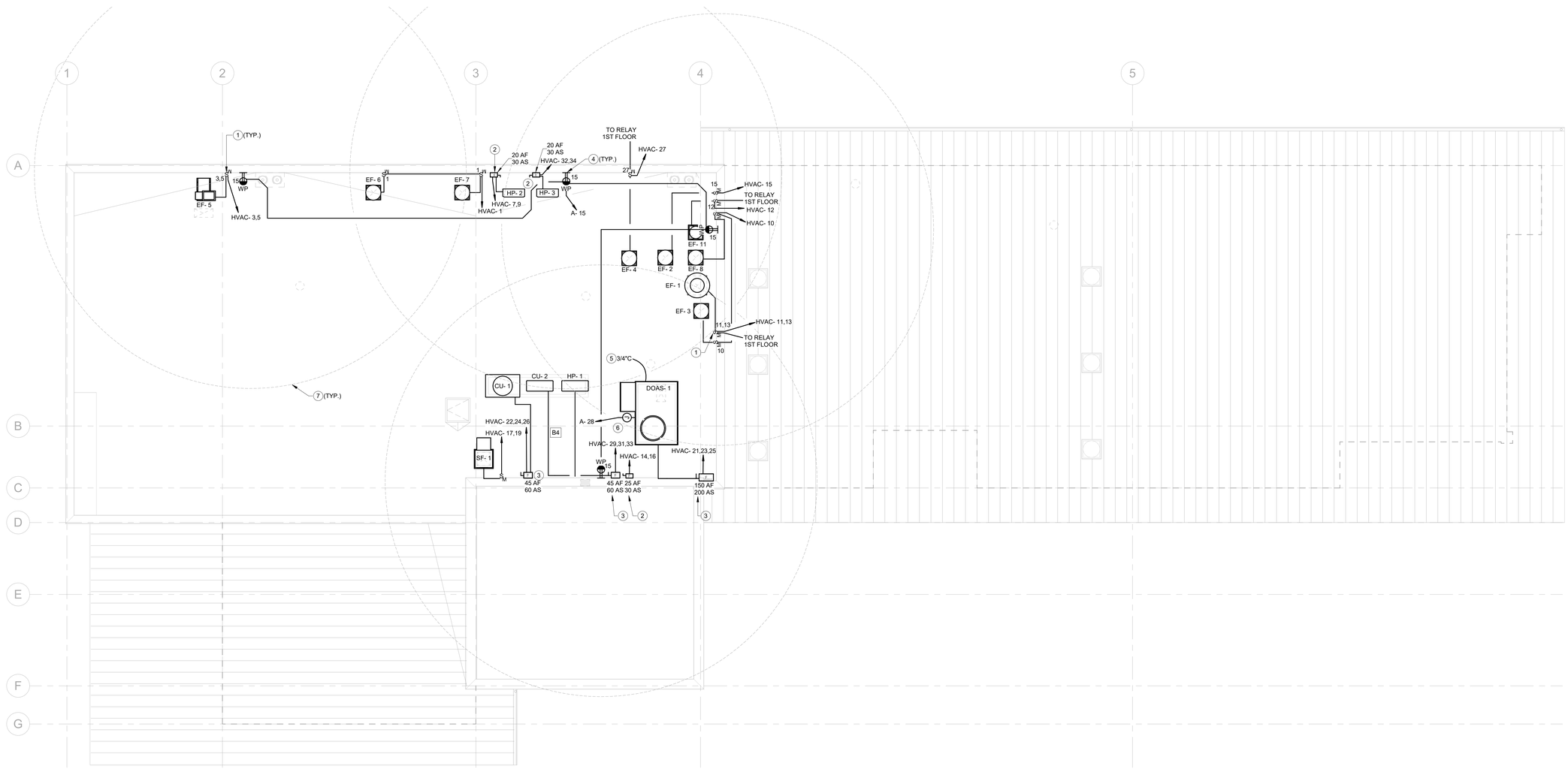

ELECTRICAL COMMUNITY BUILDING ROOF POWER PLAN

SCALE: 3/16" = 1'-0"

1 / E2.03

N

GENERAL NOTES

1. MARK ALL JUNCTION BOXES, RECEPTACLES WITH PANEL AND CIRCUIT NUMBERS
2. PROVIDE 3/4"C FROM FAN COIL TO ASSOCIATED THERMOSTATS AND OUTDOOR UNITS FOR CONTROLS PURPOSE, PROVIDE CONTROLS CABLING PER MFR REQUIREMENTS
3. ALL J-BOXES, CONTROLLERS AND OTHER ELECT. EQ LOCATED IN CEILING OR WALL CAVITIES SHALL BE ACCESSIBLE BY AN ACCESS PANEL OR OTHER APPROVED MEANS
4. ALL OUTDOOR RECEPTACLES SHALL BE GFCI TYPE AND SHALL BE PROVIDED WITH WEATHER PROTECTIVE COVERS
5. ALL OUTDOOR EQ. SHALL BE NEMA-3R TYPE
6. WIRING FOR POWER PLANS IS DIAGRAMMATIC AND ONLY INDICATES CIRCUITING, CONTRACTOR MUST FIELD DETERMINE THE MOST APPROPIATE MEANS METHOD OF WIRING AND PROVDIE ALL REQUIRED ACCESSORIES FOR A FULLY OPERATIONAL SYSTEM

KEYNOTES

1	30A, NEMA-3R, 2P MOTOR RATED SWITCH. USE LEVITON N3302-DS OR APPROVED EQUAL
2	NEMA-3R, 22-KAIC, 600VAC, 2P DISCONNECT SWITCH
3	NEMA-3R,22-KAIC, 600VAC, 3P DISCONNECT SWITCH
4	120VAC, GFCI SERVICE RECP. WITH WEATHER PROOF COVER, COVER TO READ EXTRA DUTY WHILE IN USE
5	PROVIDE 3/4"C TO FIRE ALARM PANEL FOR UNIT FIRE SHUTDOWN
6	DUCT SMOKE DET. POWER SUPPLY, BREAKER FEEDING DUCT SMOKE DET. SHALL BE PROVIDED WITH RED LOCK-ON DEVICE
7	TYPICAL 25FT RADIUS FOR SERVICE RECEPTACLES

WIRE LEGEND

B1	3/4"C-2#10CU LINE+1#10CU GRD-	30A
B2	3/4"C-3#10CU LINE+1#10CU GRD-	30A
B3	3/4"C-2#8CU LINE+1#10CU GRD-	40A
B4	3/4"C-3#8CU LINE+1#10CU GRD-	40A
B5	3/4"C-2#6CU LINE+1#10CU GRD-	55A
B6	3/4"C-3#6CU LINE+1#10CU GRD-	55A
B7	1"C-3#4CU LINE+1#10CU SHARED GRD -55A	
B8	1"C-2#4CU LINE+1#8CU GRD-	70A
B9	1"C-3#4CU LINE+1#8CU GRD-	70A
B10	1.25"C-2#1CU LINE+1#6U GRD-	130A
B11	1.25"C-3#1CU LINE+1#6U GRD-	130A
B12	1.5"C-2#1/0CU LINE+1#6CU GRD-	150A
B13	1.5"C-3#1/0CU LINE+1#6CU GRD-	150A

CIRCUITS FOR 20A OR LESS SHALL BE PROVIDED WITH 2/3#12CU+1#10CU GRD

AGENCY

REVIEWED FOR CODE COMPLIANCE BY: WILLDAN ENGINEERING

Approval of these plans & specifications shall not be construed to be a permit for, or an approval of any violation of any Federal, State, County or City laws or ordinances. One set of approved plans must be kept on the job until completion.

10:06:31 AM Jul 21, 2025

FLEWELLING & MOODY
architecture planning interiors

HEADQUARTERS OFFICE:
99 S. Lake Avenue, Suite 300
Pasadena, CA 91101
Phone: 323.543.8300
E-Mail: fm-pasadena@flewelling-moody.com

ANTELOPE VALLEY OFFICE:
1035 West Lancaster Bouldvard
Lancaster, California 93534
Phone: 661.949.0771
E-Mail: fm-lancaster@flewelling-moody.com

An Employee Owned Corporation

ARCHITECT

CONSULTANT

Budlong
An MBE|SBE|DBE|LSBE Firm
Glendale|Downtown LA|Fremont|Camarillo
W W W . B U D L O N G . C O M
Job No. 23-140

REGISTERED PROFESSIONAL ENGINEER — JAMES H. CHRISTIAN — TE 22864 — 12/20/25 — ELECTRICAL — STATE OF CALIFORNIA

Drawn by: Author

Check by: Checker

Revisions

No.	Date	Description
	01/26/24	100% DD
	03/01/24	50% CD
	05/09/24	90% CD
	08/05/24	100% CD
	11/25/24	100% CD V2
	01/31/25	100% CD V3

All dimensions must be checked at the job by the contractor who accepts full responsibility for their accuracy under the contract. These plans & the specifications in connection therewith have been prepared for a specific site. Any and all responsibility for their use in whole or in part on any other site is hereby disclaimed by Flewelling & Moody.

CITY OF RIDGECREST

SGT. JOHN PINNEY MEMORIAL POOL REPLACEMENT

205 S WARNER ST, RIDGECREST, CA 93555

Drawing Title

ELECTRICAL COMMUNITY BUILDING ROOF POWER PLAN

Job No. 3055-0100

Sheet No. **E2.03**

Date 05/09/2025

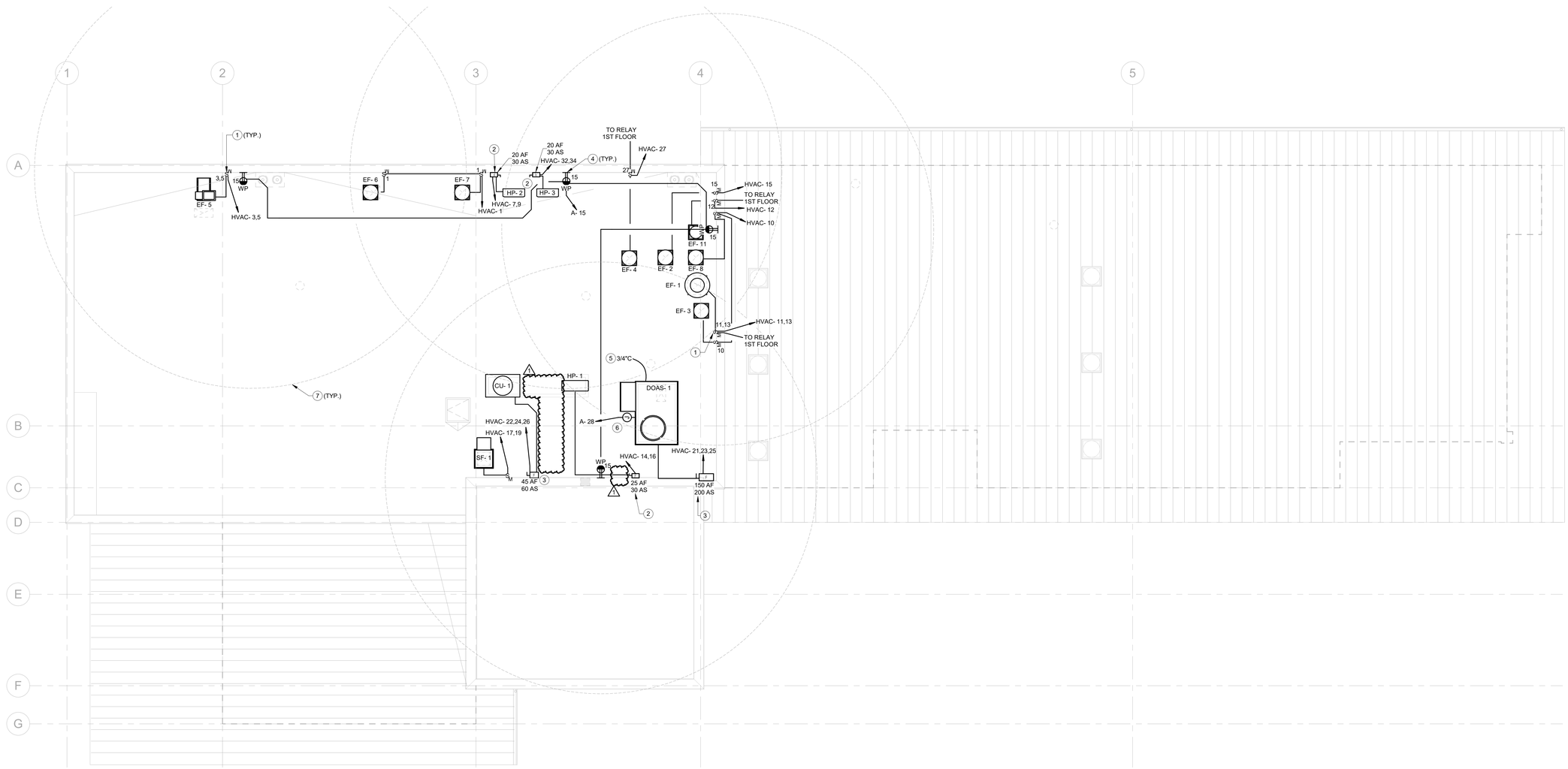

ELECTRICAL COMMUNITY BUILDING ROOF POWER PLAN ALT 6

SCALE: 3/16" = 1'-0"

1 E2.03A6

N

GENERAL NOTES

1. MARK ALL JUNCTION BOXES, RECEPTACLES WITH PANEL AND CIRCUIT NUMBERS
2. PROVIDE 3/4"C FROM FAN COIL TO ASSOCIATED THERMOSTATS AND OUTDOOR UNITS FOR CONTROLS PURPOSE, PROVIDE CONTROLS CABLING PER MFR REQUIREMENTS
3. ALL J-BOXES, CONTROLLERS AND OTHER ELECT. EQ LOCATED IN CEILING OR WALL CAVITIES SHALL BE ACCESSIBLE BY AN ACCESS PANEL OR OTHER APPROVED MEANS
4. ALL OUTDOOR RECEPTACLES SHALL BE GFCI TYPE AND SHALL BE PROVIDED WITH WEATHER PROTECTIVE COVERS
5. ALL OUTDOOR EQ. SHALL BE NEMA-3R TYPE
6. WIRING FOR POWER PLANS IS DIAGRAMMATIC AND ONLY INDICATES CIRCUITING, CONTRACTOR MUST FIELD DETERMINE THE MOST APPROPIATE MEANS METHOD OF WIRING AND PROVDIE ALL REQUIRED ACCESSORIES FOR A FULLY OPERATIONAL SYSTEM

KEYNOTES

1	30A, NEMA-3R, 2P MOTOR RATED SWITCH. USE LEVITON N3302-DS OR APPROVED EQUAL
2	NEMA-3R, 22-KAIC, 600VAC, 2P DISCONNECT SWITCH
3	NEMA-3R,22-KAIC, 600VAC, 3P DISCONNECT SWITCH
4	120VAC, GFCI SERVICE RECP. WITH WEATHER PROOF COVER, COVER TO READ EXTRA DUTY WHILE IN USE
5	PROVIDE 3/4"C TO FIRE ALARM PANEL FOR UNIT FIRE SHUTDOWN
6	DUCT SMOKE DET. POWER SUPPLY, BREAKER FEEDING DUCT SMOKE DET. SHALL BE PROVIDED WITH RED LOCK-ON DEVICE
7	TYPICAL 25FT RADIUS FOR SERVICE RECEPTACLES

WIRE LEGEND

B1	3/4"C-2#10CU LINE+1#10CU GRD-	30A
B2	3/4"C-3#10CU LINE+1#10CU GRD-	30A
B3	3/4"C-2#8CU LINE+1#10CU GRD-	40A
B5	3/4"C-2#6CU LINE+1#10CU GRD-	55A
B6	3/4"C-3#6CU LINE+1#10CU GRD-	55A
B7	1"C-3#4CU LINE+1#10CU SHARED GRD -55A	
B8	1"C-2#4CU LINE+1#8CU GRD-	70A
B9	1"C-3#4CU LINE+1#8CU GRD-	70A
B10	1.25"C-2#1CU LINE+1#6U GRD-	130A
B11	1.25"C-3#1CU LINE+1#6U GRD-	130A
B12	1.5"C-2#1/0CU LINE+1#6CU GRD-	150A
B13	1.5"C-3#1/0CU LINE+1#6CU GRD-	150A

CIRCUITS FOR 20A OR LESS SHALL BE PROVIDED WITH 2/3#12CU+1#10CU GRD

AGENCY

FLEWELLING & MOODY
architecture planning interiors

HEADQUARTERS OFFICE:
99 S. Lake Avenue, Suite 300
Pasadena, CA 91101
Phone: 323.543.8300
E-Mail: fm-pasadena@flewelling-moody.com

ANTELOPE VALLEY OFFICE:
1035 West Lancaster Bouldvard
Lancaster, California 93534
Phone: 661.949.0771
E-Mail: fm-lancaster@flewelling-moody.com

An Employee Owned Corporation

ARCHITECT

CONSULTANT

Budlong
An MBE|SBE|DBE|LSBE Firm
Glendale|Downtown LA|Fremont|Camarillo
W W W . B U D L O N G . C O M
Job No. 23-140

REGISTERED PROFESSIONAL ENGINEER MANAN R. CHRISTIAN E 22864 ELECTRICAL STATE OF CA

Drawn by: Author

Check by: Checker

Revisions

No.	Date	Description
	01/26/24	100% DD
	03/01/24	50% CD
	05/09/24	90% CD
	08/05/24	100% CD
	11/25/24	100% CD V2
	01/31/25	100% CD V3
1	08/27/2025	BID ALTERNATE

All dimensions must be checked at the job by the contractor who accepts full responsibility for their accuracy under the contract. These plans & the specifications in connection therewith have been prepared for a specific site. Any and all responsibility for their use in whole or in part on any other site is hereby disclaimed by Flewelling & Moody.

CITY OF RIDGECREST

SGT. JOHN PINNEY MEMORIAL POOL REPLACEMENT

205 S WARNER ST, RIDGECREST, CA 93555

Drawing Title

ELECTRICAL COMMUNITY BUILDING ROOF POWER PLAN ALT 6

Job No. 3055-0000

Sheet No. E2.03A6

Date 08/07/2024

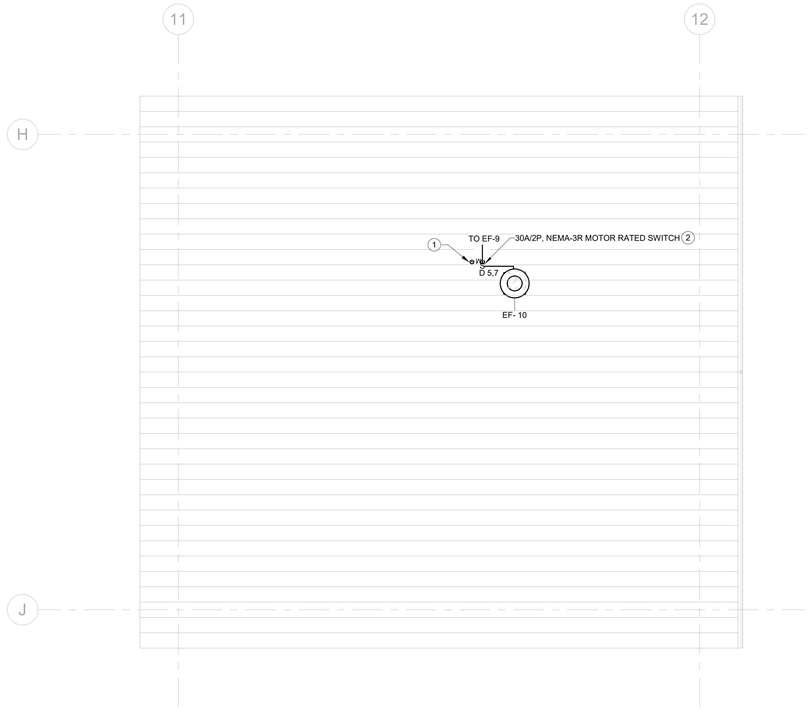

ELECTRICAL EQUIPMENT STORAGE ROOF POWER PLAN

SCALE: 3/16" = 1'-0"

1 / E2.04

N

GENERAL NOTES

1. MARK ALL JUNCTION BOXES, RECEPTACLES WITH PANEL AND CIRCUIT NUMBERS
2. PROVIDE 3/4"C FROM FAN COIL TO ASSOCIATED THERMOSTATS AND OUTDOOR UNITS FOR CONTROLS PURPOSE, PROVIDE CONTROLS CABLING PER MFR REQUIREMENTS
3. ALL J-BOXES, CONTROLLERS AND OTHER ELECT. EQ LOCATED IN CEILING OR WALL CAVITIES SHALL BE ACCESSIBLE BY AN ACCESS PANEL OR OTHER APPROVED MEANS
4. ALL OUTDOOR RECEPTACLES SHALL BE GFCI TYPE AND SHALL BE PROVIDED WITH WEATHER PROTECTIVE COVERS
5. ALL OUTDOOR EQ. SHALL BE NEMA-3R TYPE
6. WIRING FOR POWER PLANS IS DIAGRAMMATIC AND ONLY INDICATES CIRCUITING, CONTRACTOR MUST FIELD DETERMINE THE MOST APPROPIATE MEANS METHOD OF WIRING AND PROVDIE ALL REQUIRED ACCESSORIES FOR A FULLY OPERATIONAL SYSTEM

KEYNOTES

1	PROVIDE ROOF PENETRATION AND ROOF MOUNTING AS PER THE DETAIL 4/E6.01.
2	USE LEVITON N3302-DS OR APPROVED EQUAL

WIRE LEGEND

B1	3/4"C-2#10CU LINE+1#10CU GRD-	30A
B2	3/4"C-3#10CU LINE+1#10CU GRD-	30A
B3	3/4"C-2#8CU LINE+1#10CU GRD-	40A
B4	3/4"C-3#8CU LINE+1#10CU GRD-	40A
B5	3/4"C-2#6CU LINE+1#10CU GRD-	55A
B6	3/4"C-3#6CU LINE+1#10CU GRD-	55A
B7	1"C-3#4CU LINE+1#10CU SHARED GRD	-55A
B8	1"C-2#4CU LINE+1#8CU GRD-	70A
B9	1"C-3#4CU LINE+1#8CU GRD-	70A
B10	1.25"C-2#1CU LINE+1#6U GRD-	130A
B11	1.25"C-3#1CU LINE+1#6U GRD-	130A
B12	1.5"C-2#1/0CU LINE+1#6CU GRD-	150A
B13	1.5"C-3#1/0CU LINE+1#6CU GRD-	150A

CIRCUITS FOR 20A OR LESS SHALL BE PROVIDED WITH 2/3#12CU+1#10CU GRD

AGENCY

REVIEWED FOR CODE COMPLIANCE BY: WILLDAN ENGINEERING

Approval of these plans & specifications shall not be construed to be a permit for, or an approval of any violation of any Federal, State, County or City laws or ordinances. One set of approved plans must be kept on the job until completion.

10:06:33 AM Jul 21, 2025

FLEWELLING & MOODY
architecture planning interiors

HEADQUARTERS OFFICE:
99 S. Lake Avenue, Suite 300
Pasadena, CA 91101
Phone: 323.543.8300
E-Mail: fm-pasadena@flewelling-moody.com

ANTELOPE VALLEY OFFICE:
1035 West Lancaster Bouldvard
Lancaster, California 93534
Phone: 661.949.0771
E-Mail: fm-lancaster@flewelling-moody.com

An Employee Owned Corporation

ARCHITECT

CONSULTANT

Budlong
An MBE|SBE|DBE|LSBE Firm
Glendale|Downtown LA|Fremont|Camarillo
W W W . B U D L O N G . C O M
Job No. 23-140

REGISTERED PROFESSIONAL ENGINEER MANAN H. CHRISTIAN E 22864 ELECTRICAL STATE OF CALIFORNIA

Drawn by: Author

Check by: Checker

Revisions

No.	Date	Description
	01/26/24	100% DD
	03/01/24	50% CD
	05/09/24	90% CD
	08/05/24	100% CD
	11/25/24	100% CD V2
	01/31/25	100% CD V3
	12/17/24	PC CHANGES

All dimensions must be checked at the job by the contractor who accepts full responsibility for their accuracy under the contract. These plans & the specifications in connection therewith have been prepared for a specific site. Any and all responsibility for their use in whole or in part on any other site is hereby disclaimed by Flewelling & Moody.

CITY OF RIDGECREST

SGT. JOHN PINNEY MEMORIAL POOL REPLACEMENT

205 S WARNER ST, RIDGECREST, CA 93555

Drawing Title

ELECTRICAL EQUIPMENT STORAGE ROOF POWER PLAN

Job No. 3055-0100

Date 05/09/2025

Sheet No. E2.04

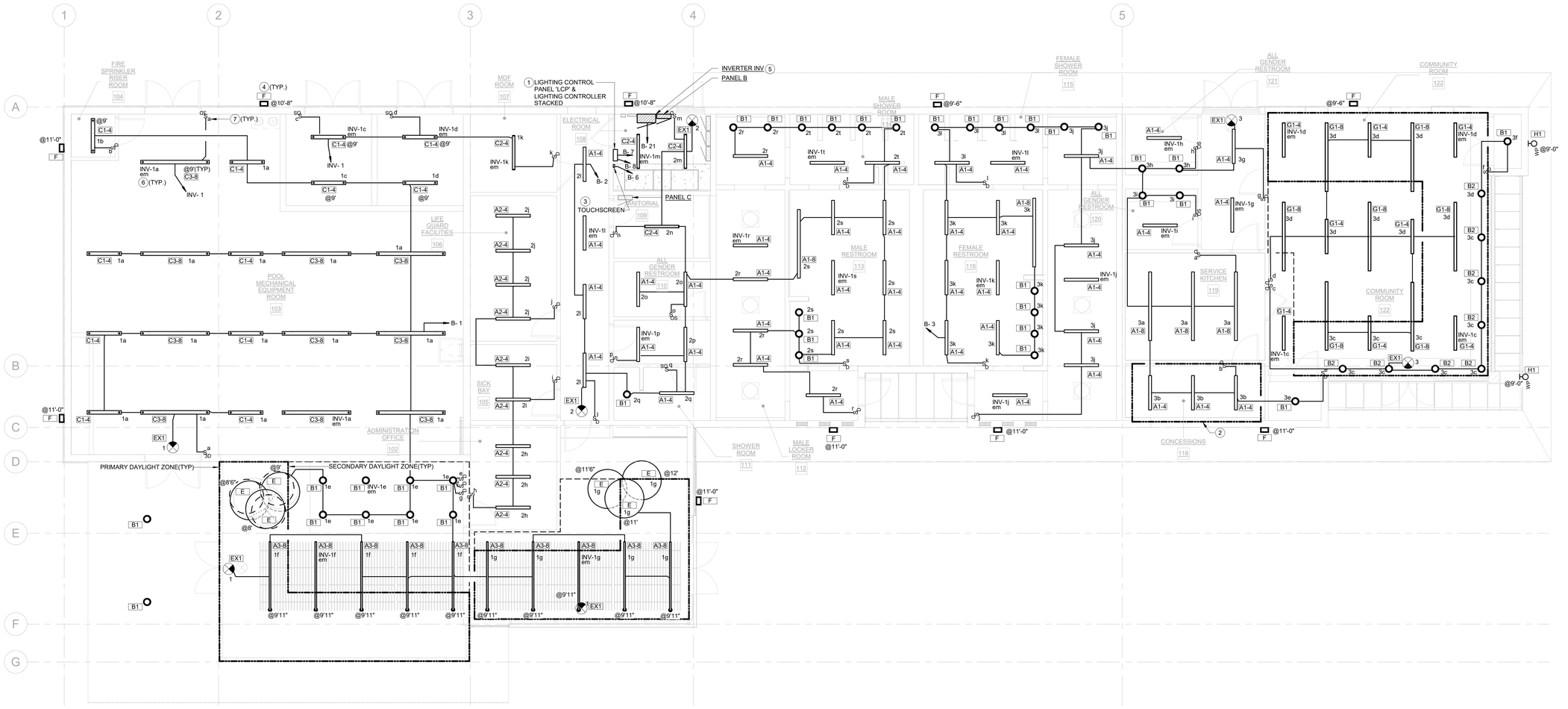

REFER TO SHEET E2.07 FOR THE LIGHTING CONTROL LAYOUT

ELECTRICAL COMMUNITY BUILDING LIGHTING PLAN

SCALE: 3/16" = 1'-0"

1 / E2.05

N

GENERAL NOTES

1. EMERGENCY LIGHTING TO BE PROVIDED IN CONDUITS/RACEWAYS AND CANT BE MIXED WITH NORMAL LIGHTING IN THE SAME CONDUIT OR RACEWAY
2. MARK ALL JUNCTION BOXES WITH PANEL AND CIRCUIT NUMBERS
3. ALL J-BOXES, CONTROLLERS AND OTHER ELECT. EQ LOCATED IN CEILING OR WALL CAVITIES SHALL BE ACCESSIBLE BY AN ACCESS PANEL OR OTHER APPROVED MEANS
4. ALL OUTDOOR EQ. SHALL BE NEMA-3R , WEATHERPROOF TYPE
5. WIRING FOR LIGHTING PLANS IS DIAGRAMMATIC AND ONLY INDICATES CIRCUITING, CONTRACTOR MUST FIELD DETERMINE THE MOST APPROPRIATE MEANS METHOD OF WIRING AND PROVDIE ALL REQUIRED ACCESSORIES FOR A FULLY OPERATIONAL SYSTEM
6. CONTRACTOR SHALL INSTALL OCCUPANCY SENSORS 4 TO 6 FEET AWAY FROM SUPPLY AIR DIFFUSERS
7. ALL CONDUITS SHALL BE CONCEALED EXCEPT WITHIN ELECTRICAL ROOM

LIGHTING CONTROL CONDUIT REQUIREMENTS

1. PROVIDE 1"C BETWEEN LIGHTING CONTROL DEVICES INCLUDING BUT NOT LIMITED TO OCCUPANCY SENSORS, DAYLIGHT SENSORS, SWITCHES ETC. PROVIDE CONTROL WIRING PER MFR REQUIREMENTS
2. PROVIDE SEPERATE 3/4"C w/0-10V WIRING WHEREEVER 0-10V DIMMING IS REQUIRED

KEYNOTES

1	LIGHTING CONTROL RELAY PANEL AND LIGHTING CONTROLLER. FOR LIGHTING CONTROL RELAY PANEL USE ACUITY BRANDS ARP INTENCO8 NLT 8FCR MVOLT SC SM, MINIMUM 8 RELAY PANEL. FOR LIGHTING CONTROLLER USE ACUITY BRANDS NECY MVOLT ENC GFXK
2	DAYLIGHTING CONTROL NOT REQUIRED AS LIGHTING WATTAGE IS LESS THAN 120 WATTS IN PRIMARY DAYLIGHT ZONE
3	NLIGHT nGWY2 GFX w/PS150 POWER SUPPLY
4	REFER TO SITE LIGHTING PLAN FOR OUTDOOR LIGHTING CIRCUITING
5	INVERTER 'INV', USE MYERS 1EM-2-S-B-A-20-6. PROVIDE UL924 LISTED SHUNT RELAY FOR EACH EMERGENCY CIRCUIT, USE MYERS-EPC-2-D
6	'em' INDICATES EMERGENCY LIGHTING FIXTURES, EMERGENCY LIGHTING FIXTURES TO BE FED VIA INVERTER CIRCUIT
7	LOWER CASE LETTERS ARE SWITCH IDs AND INDICATES WHICH LIGHT FIXTURE IS CONTROLLED BY WHICH LIGHT SWITCH

AGENCY

REVIEWED FOR CODE COMPLIANCE BY: WILLDAN ENGINEERING

Approval of these plans & specifications shall not be construed to be a permit for, or an approval of any violation of any Federal, State, County or City laws or ordinances. One set of approved plans must be kept on the job until completion.

10:06:35 AM Jul 21, 2025

FLEWELLING & MOODY
architecture planning interiors

HEADQUARTERS OFFICE:
99 S. Lake Avenue, Suite 300
Pasadena, CA 91101
Phone: 323.543.8300
E-Mail: fm-pasadena@flewelling-moody.com

ANTELOPE VALLEY OFFICE:
1035 West Lancaster Boulvard
Lancaster, California 93534
Phone: 661.949.0771
E-Mail: fm-lancaster@flewelling-moody.com

An Employee Owned Corporation

ARCHITECT

CONSULTANT

Budlong
An MBE|SBE|DBE|LSBE Firm
Glendale|Downtown LA|Fremont|Camarillo
W W W . B U D L O N G . C O M
Job No. 23-140

REGISTERED PROFESSIONAL ENGINEER MARK K. CHRISTIAN E 22864 ELECTRICAL STATE OF CALIFORNIA

Drawn by: Author

Check by: Checker

Revisions

No.	Date	Description
	01/26/24	100% DD
	03/01/24	50% CD
	05/09/24	90% CD
	08/05/24	100% CD
	11/25/24	100% CD V2
	01/31/25	100% CD V3
	12/17/24	PC CHANGES

All dimensions must be checked at the job by the contractor who accepts full responsibility for their accuracy under the contract. These plans & the specifications in connection therewith have been prepared for a specific site. Any and all responsibility for their use in whole or in part on any other site is hereby disclaimed by Flewelling & Moody.

CITY OF RIDGECREST

SGT. JOHN PINNEY MEMORIAL POOL REPLACEMENT

205 S WARNER ST, RIDGECREST, CA 93555

Drawing Title

ELECTRICAL COMMUNITY BUILDING LIGHTING PLAN

Job No. 3055-0100

Sheet No. **E2.05**

Date 05/09/2025

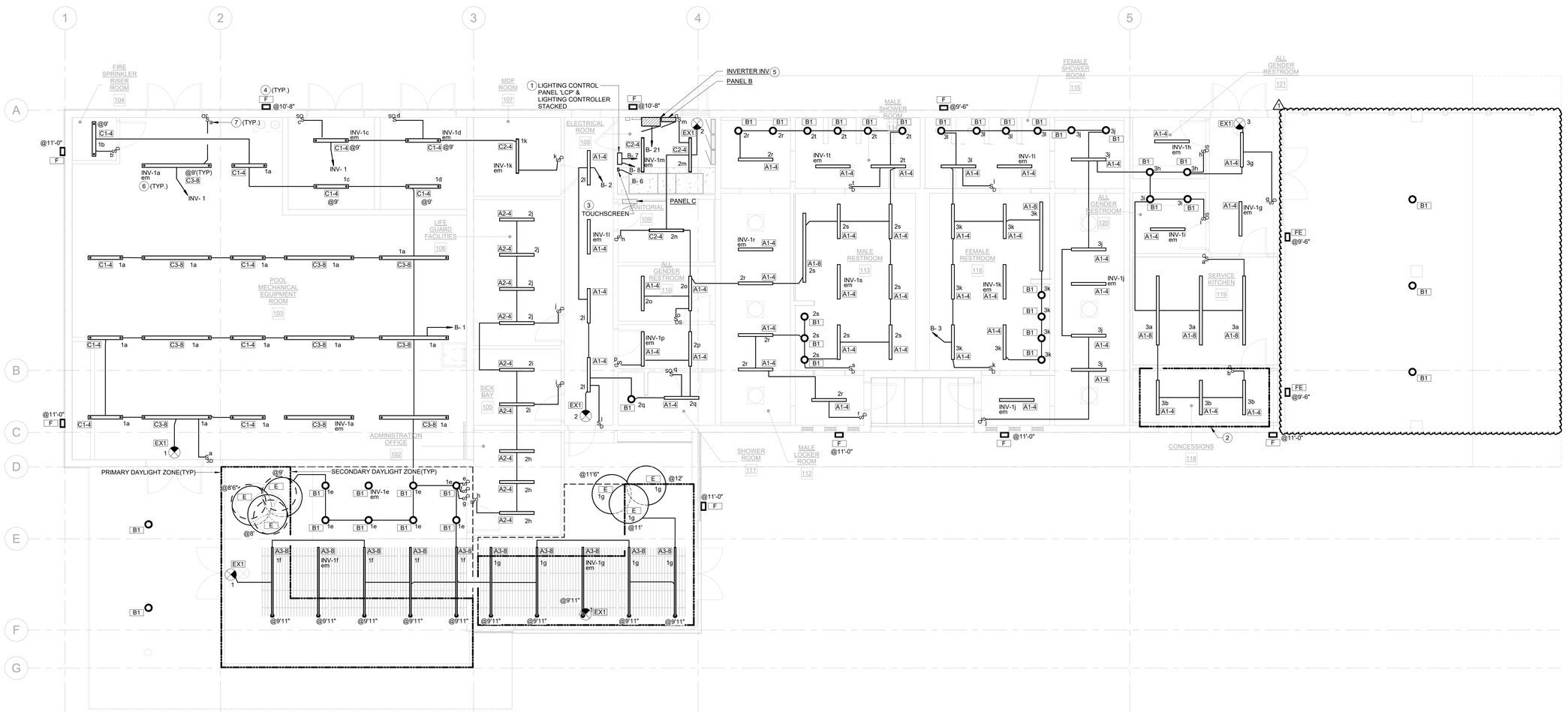

REFER TO SHEET E2.07 FOR THE LIGHTING CONTROL LAYOUT

ELECTRICAL COMMUNITY BUILDING LIGHTING PLAN ALT 6

SCALE: 3/16" = 1'-0"

1 / E2.05A6

N

GENERAL NOTES

1. EMERGENCY LIGHTING TO BE PROVIDED IN CONDUITS/RACEWAYS AND CANT BE MIXED WITH NORMAL LIGHTING IN THE SAME CONDUIT OR RACEWAY
2. MARK ALL JUNCTION BOXES WITH PANEL AND CIRCUIT NUMBERS
3. ALL J-BOXES, CONTROLLERS AND OTHER ELECT. EQ LOCATED IN CEILING OR WALL CAVITIES SHALL BE ACCESSIBLE BY AN ACCESS PANEL OR OTHER APPROVED MEANS
4. ALL OUTDOOR EQ. SHALL BE NEMA-3R , WEATHERPROOF TYPE
5. WIRING FOR LIGHTING PLANS IS DIAGRAMMATIC AND ONLY INDICATES CIRCUITING, CONTRACTOR MUST FIELD DETERMINE THE MOST APPROPRIATE MEANS METHOD OF WIRING AND PROVDIE ALL REQUIRED ACCESSORIES FOR A FULLY OPERATIONAL SYSTEM
6. CONTRACTOR SHALL INSTALL OCCUPANCY SENSORS 4 TO 6 FEET AWAY FROM SUPPLY AIR DIFFUSERS
7. ALL CONDUITS SHALL BE CONCEALED EXCEPT WITHIN ELECTRICAL ROOM

LIGHTING CONTROL CONDUIT REQUIREMENTS

1. PROVIDE 1"C BETWEEN LIGHTING CONTROL DEVICES INCLUDING BUT NOT LIMITED TO OCCUPANCY SENSORS, DAYLIGHT SENSORS, SWITCHES ETC. PROVIDE CONTROL WIRING PER MFR REQUIREMENTS
2. PROVIDE SEPERATE 3/4"C w/0-10V WIRING WHEREEVER 0-10V DIMMING IS REQUIRED

KEYNOTES

1	LIGHTING CONTROL RELAY PANEL AND LIGHTING CONTROLLER. FOR LIGHTING CONTROL RELAY PANEL USE ACUITY BRANDS ARP INTENCO8 NLT 8FCR MVOLT SC SM, MINIMUM 8 RELAY PANEL. FOR LIGHTING CONTROLLER USE ACUITY BRANDS NECY MVOLT ENC GFXK
2	DAYLIGHTING CONTROL NOT REQUIRED AS LIGHTING WATTAGE IS LESS THAN 120 WATTS IN PRIMARY DAYLIGHT ZONE
3	NLIGHT nGWY2 GFX w/PS150 POWER SUPPLY
4	REFER TO SITE LIGHTING PLAN FOR OUTDOOR LIGHTING CIRCUITING
5	INVERTER 'INV', USE MYERS 1EM-2-S-B-A-20-6. PROVIDE UL924 LISTED SHUNT RELAY FOR EACH EMERGENCY CIRCUIT, USE MYERS-EPC-2-D
6	'em' INDICATES EMERGENCY LIGHTING FIXTURES, EMERGENCY LIGHTING FIXTURES TO BE FED VIA INVERTER CIRCUIT
7	LOWER CASE LETTERS ARE SWITCH IDs AND INDICATES WHICH LIGHT FIXTURE IS CONTROLLED BY WHICH LIGHT SWITCH

AGENCY

FLEWELLING & MOODY
architecture planning interiors

HEADQUARTERS OFFICE:
99 S. Lake Avenue, Suite 300
Pasadena, CA 91101
Phone: 323.543.8300
E-Mail: fm-pasadena@flewelling-moody.com

ANTELOPE VALLEY OFFICE:
1035 West Lancaster Bouldvard
Lancaster, California 93534
Phone: 661.949.0771
E-Mail: fm-lancaster@flewelling-moody.com

An Employee Owned Corporation

ARCHITECT

CONSULTANT

Budlong
An MBE|SBE|DBE|LSBE Firm
Glendale|Downtown LA|Fremont|Camarillo
W W W . B U D L O N G . C O M
Job No. 23-140

REGISTERED PROFESSIONAL ENGINEER MARK A. CHRISTIAN E 22864 3/2025 ELECTRICAL STATE OF CA

Drawn by: Author

Check by: Checker

Revisions

No.	Date	Description
	01/26/24	100% DD
	03/01/24	50% CD
	05/09/24	90% CD
	08/05/24	100% CD
	11/25/24	100% CD V2
	01/31/25	100% CD V3
	12/17/24	PC CHANGES
1	08/27/2025	BID ALTERNATE

All dimensions must be checked at the job by the contractor who accepts full responsibility for their accuracy under the contract. These plans & the specifications in connection therewith have been prepared for a specific site. Any and all responsibility for their use in whole or in part on any other site is hereby disclaimed by Flewelling & Moody.

CITY OF RIDGECREST

SGT. JOHN PINNEY MEMORIAL POOL REPLACEMENT

205 S WARNER ST, RIDGECREST, CA 93555

Drawing Title

ELECTRICAL COMMUNITY BUILDING LIGHTING PLAN ALT 6

Job No. 3055-0000

Sheet No. **E2.05A6**

Date 08/07/2024

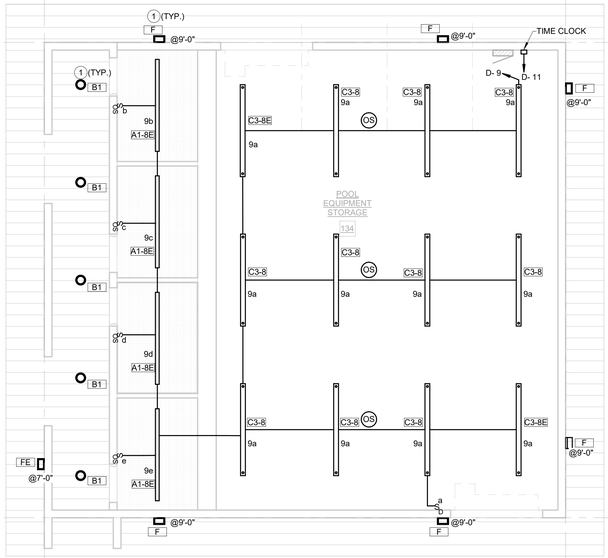

ELECTRICAL EQUIPMENT STORAGE LIGHTING PLAN

SCALE: 3/16" = 1'-0"

1 / E2.06

N

GENERAL NOTES

1. EMERGENCY LIGHTING TO BE PROVIDED IN CONDUITS/RACEWAYS AND CANT BE MIXED WITH NORMAL LIGHTING IN THE SAME CONDUIT OR RACEWAY
2. MARK ALL JUNCTION BOXES WITH PANEL AND CIRCUIT NUMBERS
3. ALL J-BOXES, CONTROLLERS AND OTHER ELECT. EQ LOCATED IN CEILING OR WALL CAVITIES SHALL BE ACCESSIBLE BY AN ACCESS PANEL OR OTHER APPROVED MEANS
4. ALL OUTDOOR EQ. SHALL BE NEMA-3R , WEATHERPROOF TYPE
5. WIRING FOR LIGHTING PLANS IS DIAGRAMMATIC AND ONLY INDICATES CIRCUITING, CONTRACTOR MUST FIELD DETERMINE THE MOST APPROPRIATE MEANS METHOD OF WIRING AND PROVDIE ALL REQUIRED ACCESSORIES FOR A FULLY OPERATIONAL SYSTEM
6. CONTRACTOR SHALL INSTALL OCCUPANCY SENSORS 4 TO 6 FEET AWAY FROM SUPPLY AIR DIFFUSERS
7. ALL CONDUITS SHALL BE CONCEALED EXCEPT WITHIN ELECTRICAL ROOM

LIGHTING CONTROL CONDUIT REQUIREMENTS

1. PROVIDE 1"C BETWEEN LIGHTING CONTROL DEVICES INCLUDING BUT NOT LIMITED TO OCCUPANCY SENSORS, DAYLIGHT SENSORS, SWITCHES ETC. PROVIDE CONTROL WIRING PER MFR REQUIREMENTS
2. PROVIDE SEPERATE 3/4"C w/0-10V WIRING WHEREEVER 0-10V DIMMING IS REQUIRED

KEYNOTES

1	REFER TO SITE LIGHTING PLAN FOR OUTDOOR LIGHTING CIRCUITING

AGENCY

REVIEWED FOR CODE COMPLIANCE BY: WILLDAN ENGINEERING

Approval of these plans & specifications shall not be construed to be a permit for, or an approval of any violation of any Federal, State, County or City laws or ordinances. One set of approved plans must be kept on the job until completion.

10:06:37 AM Jul 21, 2025

FLEWELLING & MOODY
architecture planning interiors

HEADQUARTERS OFFICE:
99 S. Lake Avenue, Suite 300
Pasadena, CA 91101
Phone: 323.543.8300
E-Mail: fm-pasadena@flewelling-moody.com

ANTELOPE VALLEY OFFICE:
1035 West Lancaster Boulevard
Lancaster, California 93534
Phone: 661.949.0771
E-Mail: fm-lancaster@flewelling-moody.com

An Employee Owned Corporation

ARCHITECT

CONSULTANT

Budlong
An MBE|SBE|DBE|LSBE Firm
Glendale|Downtown LA|Fremont|Camarillo
W W W . B U D L O N G . C O M
Job No. 23-140

REGISTERED PROFESSIONAL ENGINEER — JAMES H. CHRISTIAN — E 22864 — 12/20/25 — ELECTRICAL — STATE OF CALIFORNIA

Drawn by: Author

Check by: Checker

Revisions

No.	Date	Description
	01/26/24	100% DD
	03/01/24	50% CD
	05/09/24	90% CD
	08/05/24	100% CD
	11/25/24	100% CD V2
	01/31/25	100% CD V3
	12/17/24	PC CHANGES

All dimensions must be checked at the job by the contractor who accepts full responsibility for their accuracy under the contract. These plans & the specifications in connection therewith have been prepared for a specific site. Any and all responsibility for their use in whole or in part on any other site is hereby disclaimed by Flewelling & Moody.

CITY OF RIDGECREST

SGT. JOHN PINNEY MEMORIAL POOL REPLACEMENT

205 S WARNER ST, RIDGECREST, CA 93555

Drawing Title

ELECTRICAL EQUIPMENT STORAGE LIGHTING PLAN

Job No. 3055-0100

Date 05/09/2025

Sheet No. **E2.06**

PRODUCT LEGEND E2.05			
4	nBRG BKIT	BG1 NBRG 8 KIT nLight Bridge, 8 ports, Kit	
4	nP 16D	DP1 NPP16 D EFP Power/Relay Pack, Dimming, External Fault Protection	
12	nCP 9	OS1 NCM PDT 9 RJB Low Voltage Ceiling Mount Sensor, Passive Dual Technology, Small Motion / Standard Range 360° Lens, Rear RJ-45 Ports	
5	nCM 10	OS2 NCM 10 RJB Low Voltage Ceiling Mount Sensor, Large Motion / Extended Range 360° Lens, Rear RJ-45 Ports	
4	nCP 9 LT	OS3 NCM PDT 9 LT RJB Low Voltage Ceiling Mount Sensor, Passive Dual Technology, Small Motion / Standard Range 360° Lens, Low Temperature / High Humidity, Rear RJ-45 Ports	
2	nCM MOCK	PC1 NCM ADCX RJB Low Voltage Ceiling Mount Sensor, Photocontrol w/ Auto Dimming; 0-10V Output Provided by Other Device(s), Rear RJ-45 Ports	
1	ARP 08 FCR MVOLT	PL1 ARP INTENC08 NLT 8FCR MVOLT SC SM Acuity Relay Panel, Include INT and ENC, 8-Size, nLight, 8-field configurable relays, 120-277V, Screw Cover, Surface Mount	
2	nCP 9 ADCX	PO1 NCM PDT 9 ADCX RJB Low Voltage Ceiling Mount Sensor, Passive Dual Technology, Small Motion / Standard Range 360° Lens, Photocontrol w/ Auto Dimming; 0-10V Output Provided by Other Device(s), Rear RJ-45 Ports	
5	nP 20 PL	PP1 NPP20 PL Power/Relay Pack, Plug Load	
1	nP 16	PP2 NPP16 EFP Power/Relay Pack, External Fault Protection	
1	nECY GFXK	SC1 NECY MVOLT ENC GFXK nLight Eclypse, 120-277V, Enclosure for nLight ECLYPSE, nGWY2 GFX and PS 150 Power Supply	
4	nSXA LVDX	SO1 NWSXA LV DX XX Aesthetic Wall Switch Occupancy Sensor, Low Voltage, Raise/Lower Dimming	
5	SXA	SO2 WSXA XX Wall Switch Sensor	
2	SXA PDT D	SO3 WSXA PDT D XX LT Wall Switch Sensor, Passive Dual Technology, Dimming	
12	nPOD MADX	SW1 NPODMA DX XX nLight Wired Aesthetic Wallpod, Raise/Lower Dimming	
2	nPOD MA2P DX	SW2 NPODMA 2P DX XX nLight Wired Aesthetic Wallpod, 2-Pole, Raise/Lower Dimming	
2	PTS 60 LT	SW3 PTS 60 XX LT Preset Timer Switch, 60 Minute Max, Low Temperature / High Humidity	
2	nPOD MA	SW4 NPODMA XX LT nLight Wired Aesthetic Wallpod	
2	sPOD RD EZ	SW5 SPODMRD EZ XX Wall Switch Dimmer, eldoLED Driver Control	

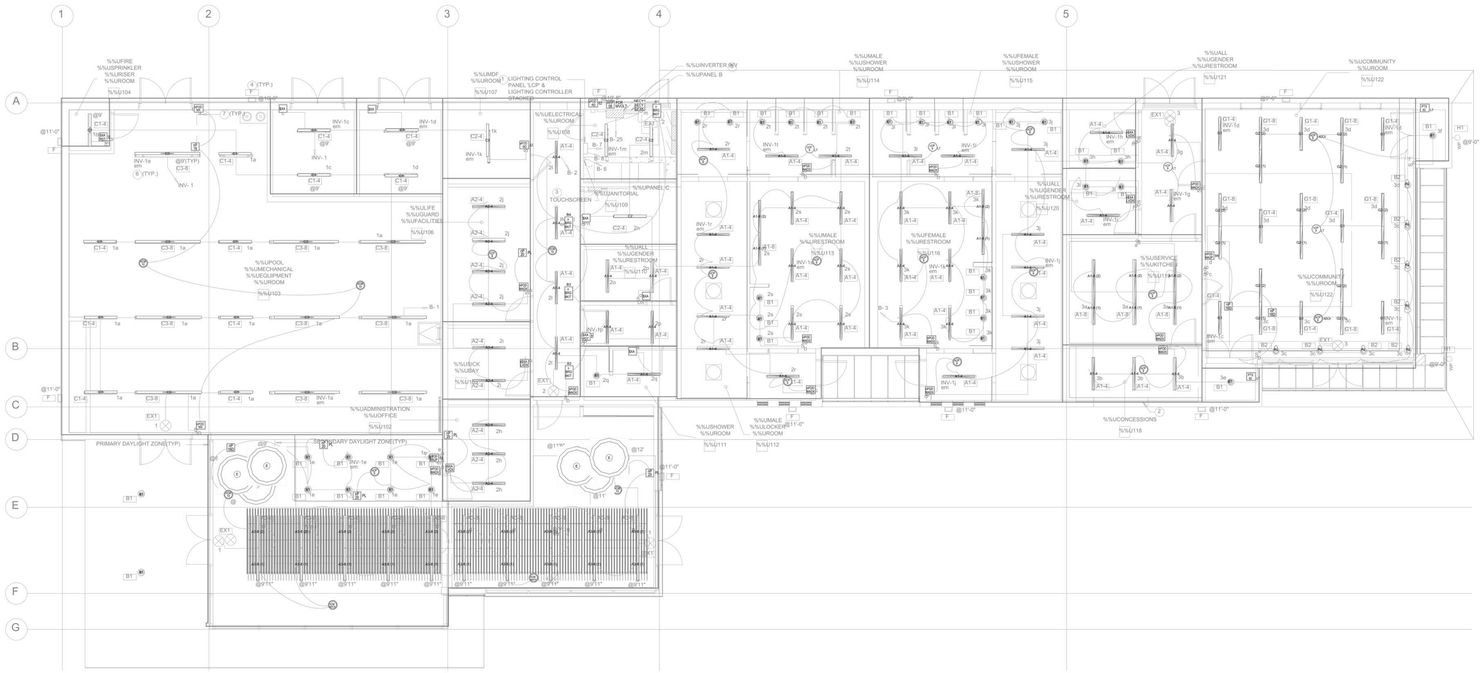

WIRE LEGEND E2.05	
	CAT5 nLight CAT5e nLight Pre-terminated CAT5e cable for nLight communication network

PROVIDE CONDUITS FOR CAT5/5E/6 CABLING FOR CONTROLS

3/4"C - MAX 3
1"C - MAX 6
1.25"C - MAX 9
1.5"C - MAX 14
2"C - MAX 24
2.5"C - MAX 38
3"C - MAX 55
3.5"C - MAX 75
4"C - MAX 98

Created in Visual Controls

ELECTRICAL LIGHTING CONTROL PLAN

SCALE:NTS

1 E2.07

N

PINNEY POOL REPLACEMENT
RIDGECREST, CA

Drawing Type: Control Layout
Prepared For: BUDLONG AND ASSOCIATES

Date:	2/6/2024
Scale:	3/16" = 1'
Drawn By:	SKD
Project #:	02062024
DWG Ref:	unknown
Sheet:	LC1

AGENCY

REVIEWED FOR CODE COMPLIANCE BY: WILLDAN ENGINEERING

Approval of these plans & specifications shall not be construed to be a permit for, or an approval of any violation of any Federal, State, County or City laws or ordinances. One set of approved plans must be kept on the job until completion.

10:06:39 AM Jul 21, 2025

FLEWELLING & MOODY
architecture planning interiors

HEADQUARTERS OFFICE:
99 S. Lake Avenue, Suite 300
Pasadena, CA 91101
Phone: 323.543.8300
E-Mail: fm-pasadena@flewelling-moody.com

ANTELOPE VALLEY OFFICE:
1035 West Lancaster Boulevard
Lancaster, California 93534
Phone: 661.949.0771
E-Mail: fm-lancaster@flewelling-moody.com

An Employee Owned Corporation

ARCHITECT

CONSULTANT

Budlong
An MBE|SBE|DBE|LSBE Firm
Glendale|Downtown LA|Fremont|Camarillo
WWW.BUDLONG.COM
Job No. 23-140

REGISTERED PROFESSIONAL ENGINEER — OMAR H. CHRISTIAN — E 22864 — 11/30/25 — ELECTRICAL — STATE OF CALIFORNIA

Drawn by:	Author
Check by:	Checker

Revisions

No.	Date	Description
	05/09/24	90% CD
	08/05/24	100% CD
	11/25/24	100% CD V2
	01/31/25	100% CD V3

All dimensions must be checked at the job by the contractor who accepts full responsibility for their accuracy under the contract. These plans & the specifications in connection therewith have been prepared for a specific site. Any and all responsibility for their use in whole or in part on any other site is hereby disclaimed by Flewelling & Moody.

CITY OF RIDGECREST

SGT. JOHN PINNEY MEMORIAL POOL REPLACEMENT

205 S WARNER ST, RIDGECREST, CA 93555

Drawing Title

ELECTRICAL LIGHTING CONTROL PLAN

Job No.	Sheet No.
3055-0100	**E2.07**
Date: 05/09/2025	

General System Notes

ON DIGITAL SYSTEMS, ALL DEVICES TO BE CONNECTED IN A DAISY CHAIN PATTERN SO THAT THE FIRST AND LAST DEVICE IN THE CHAIN HAS AN OPEN PORT.

ON DIGITAL SYSTEMS, CONTRACTOR SHALL NOTE AND LABEL ADDRESS AND LOCATION OF EACH DEVICE ON THE SYSTEM ONE-LINE DIAGRAMS OR SYSTEM LAYOUT DRAWINGS AT TIME OF INSTALLATION.

ONE-LINE DIAGRAMS INDICATE THE REQUIRED GROUPING OF WIRES, NOT THE NUMBER OR SIZE OF CONDUITS.

WIRING SHALL CONFORM TO THE NATIONAL ELECTRICAL CODE (NEC) AND APPLICABLE LOCAL CODES, INCLUDING PROVISION OF EQUIPMENT GROUNDING AS REQUIRED BY THE NEC.

POWER CONDUCTORS SHALL BE SIZED PER THE NEC AMPACITY TABLES (ARTICLE 310), INCLUDING ADJUSTMENT FACTOR AND NEUTRAL CONDUCTOR REQUIREMENTS (FEED AND BRANCH NEUTRAL CONDUCTORS MUST BE COUNTED AS CURRENT CARRYING CONDUCTORS). RUN SEPARATE NEUTRAL CONDUCTORS FOR EACH DIMMED LOAD CIRCUIT.

FOR 0-10VDC DIMMING SYSTEMS, VIOLET AND GRAY CONDUCTORS ARE FOR 0-10VDC LOW VOLTAGE TERMINATIONS ONLY. NEVER TERMINATE LINE VOLTAGE (120/230/277VAC) TO VIOLET AND GRAY.

CONTRACTOR IS RESPONSIBLE FOR ALL CONTROL TERMINATIONS. NO SPLICES ARE PERMITTED IN CONTROL WIRING.

POWER AND CONTROL CONDUCTORS MUST NOT SHARE THE SAME RACEWAY OR CONDUIT.

LIGHTING CONTROL EQUIPMENT MUST BE INSTALLED, MAINTAINED, AND OPERATED IN AN "OFFICE CLEAN" DRY ENVIRONMENT, INDOOR DRY LOCATIONS ONLY, 10% - 90% RELATIVE HUMIDITY, AMBIENT TEMPERATURE 0° - 40°C (32° - 104°F) - 0° - 35°C (32° - 95°F) RECOMMENDED.

SENSORS IN ELECTRICAL/MECHANICAL LOCATIONS NEED TO BE VERIFIED WITH AUTHORITY HAVING JURISDICTION. REFER TO NEC 110.26.D.

RELAY AND DIMMER PANEL SCHEDULES SHOULD CONTAIN BREAKER PANEL INPUTS AS WELL AS ZONES/AREAS CONTROLLED.

VERIFY MAXIMUM CABLE LENGTHS BASED ON CONTROL SYSTEM. MANUFACTURER IS NOT RESPONSIBLE FOR SYSTEMS EXCEEDING CABLING PARAMETERS.

CAT. 5 CABLE MUST BE INSTALLED AT LEAST 12 INCHES FROM ALL LINE VOLTAGE CONDUCTORS EXCEPT TO CROSS OR MAKE TERMINATIONS. CAT. 5 CABLE MUST BE KEPT AWAY FROM ALL EMF DEVICES SUCH AS BALLASTS OR TRANSFORMERS.

nLight System Notes

EVERY NLIGHT ENABLED DEVICE (INCLUDING NLIGHT EANABLED FIXTURES) IS FURNISHED WITH (1) PERMANENTLY ADHERED ID TAG AND (1) MATCHING, PARTIALLY ADHERED ID TAG TO BE PLACED ON THE RISER DIAGRAM SHEET, OR THE LIGHTING CONTROL LAYOUT SHEET, PROVIDED AS PART OF AN NLIGHT SUBMITTAL. THIS SHALL BE DONE DURING INSTALLATION AND PRIOR TO FACTORY STARTUP. FAILURE TO COMPLY MAY RESULT IN STARTUP DELAYS AND ADDITIONAL COSTS AT THE CONTRACTOR'S EXPENSE. DO NOT PLACE DEVICE ID STICKERS ON FLOOR PLAN UNLESS REQUIRED TO EXECUTE NFLOORPLAN SERVICES, REFERENCE NFLOORPLAN SERVICE NOTES ON THIS SHEET FOR SPECIFIC REQUIREMENTS.

ONE RELAY PACK OR NLIGHT ENABLED FIXTURE IS NEEDED PER CIRCUIT/ZONE TO BE CONTROLLED AND CAN RESIDE WITHIN SENSORS, WALLPODS, OR RELAY PACKS. POWER PACK PLACEMENT ON DRAWINGS IS FOR COUNTING ONLY; FINAL PLACEMENT IS UP TO DISCRETION OF CONTRACTOR/ENGINEER. PLEASE RECHECK COUNTS TO VERIFY THE NUMBER OF RELAYS NEEDED TO SWITCH ALL DESIRED LOADS.

BRIDGES, RELAYS, POWER PACKS, WALLPODS, AND SENSORS ON DRAWINGS WERE PLACED WITH INFORMATION PROVIDED AT TIME OF DESIGN. ADDITIONAL BRIDGES AND/OR SENSORS MAY BE REQUIRED DEPENDING ON BUILDING CHANGES. FINAL PARTITION HEIGHT/PLACEMENT, FURNITURE PLACEMENT, EQUIPMENT HEIGHT/PLACEMENT AND SHELVING HEIGHT/PLACEMENT.

THE LAYOUT OF THE NETWORK BACKBONE (BRIDGES AND GATEWAYS) HAS BEEN PLACED IN A SEPARATE TREE DIAGRAM AND NOT ON THE ACTUAL LAYOUT. FINAL PLACEMENT OF THE BRIDGE(S) AND GATEWAY(S) DEVICES SHALL BE AT THE CONTRACTOR/ENGINEER DISCRETION.

ALL DEVICES HAVE RJ-45 FEMALE PORTS. MAKING NETWORK CONTROL CABLES IS REQUIRED. T568B TERMINATIONS ARE RECOMMENDED. IT IS IMPERATIVE THAT ALL NETWORK CONTROL CABLES BE TESTED WITH A LAN CABLE TESTER TO VERIFY PROPER TERMINATIONS.

DAISY-CHAINED DEVICES SHOULD BE POWERED UP AND WORKING ON DEFAULT PROGRAMMING PRIOR TO CONNECTION TO BRIDGE OR GATEWAYS.

LOW VOLTAGE NETWORK CONTROL CABLE (CAT5/5E/6) RUNS FOR LOCAL ZONES. HOMERUNS AND BACKBONE SHOULD BE WHITE WITH CABLES LABELED.

CONTRACTOR TO VERIFY BLINK/DIAGNOSTIC CODES (VISIT HTTP://NLIGHTCONTROLS.COM/WP-CONTENT/UPLOADS/NLIGHT_POCKET_GUIDE.PDF) WHEN CONNECTING GATEWAYS/BRIDGES TO ZONES.

MAXIMUM CABLE LENGTH FROM START DEVICE TO END DEVICE IS 1500' INCLUDING HOMERUN TO BRIDGE DEVICE, IF PRESENT. MANUFACTURER IS NOT RESPONSIBLE FOR SYSTEMS EXCEEDING CABLING PARAMETERS.

Load Types

LINE VOLTAGE INCANDESCENT - NON-PHASE DEPENDENT FOR DIMMING.

MAGNETIC LOW VOLTAGE INCANDESCENT - ALLOWABLE IN FORWARD PHASE CONTROL MODE ONLY. TRANSFORMER MUST BE RATED FOR DIMMING BY ITS MANUFACTURER. ADD 25% TO LAMP WATTAGE TO ALLOW FOR TRANSFORMER LOSS AND TO CALCULATE TOTAL LOAD.

FLUORESCENT - ALLOWABLE WITH 2-WIRE BALLAST, 0-10VDC BALLASTS, SOME 3-WIRE AND SWITCHED DEPENDING ON SYSTEM COMPATIBILITY. VERIFY CONTROL TYPES WITH YOUR REGIONAL SUPPORT TEAM.

LED - DIMMING ALLOWED PER LED DRIVER MANUFACTURER SPECIFICATIONS. VERIFY CONTROL TYPES WITH YOUR REGIONAL SUPPORT TEAM.

NEON and COLD CATHODE - ALLOWABLE IN FORWARD PHASE CONTROL MODE ONLY. BALLAST MUST BE RATED FOR DIMMING BY ITS MANUFACTURER AND BE NORMAL (LOW) POWER FACTOR. CONNECTED LOAD MUST NOT EXCEED 50% OF THE DIMMER'S NOMINAL RATING.

MOTORS - NO DIMMING ALLOWED. SWITCHED CONTROL SOURCE ONLY.

ELECTRONIC LOW VOLTAGE INCANDESCENT - ALLOWABLE, NORMALLY IN REVERSE PHASE CONTROL MODE ONLY. ELV TRANSFORMER MUST BE RATED FOR DIMMING BY ITS MANUFACTURER.

HID - DIMMING NOT ALLOWED UNLESS WITH DIMMABLE HID DRIVER. OTHERWISE, MUST BE ON SWITCHED CONTROL SOURCE.

EMERGENCY - PLEASE CONTACT YOUR REGIONAL SUPPORT TEAM TO VERIFY EMERGENCY CONTROLS NECESSARY BASED ON SYSTEM REQUIREMENTS.

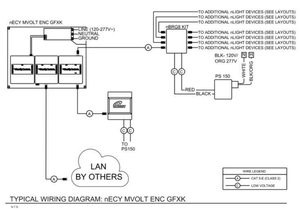

TYPICAL WIRING DIAGRAM: nECY MVOLT ENC GFXK

N.T.S.

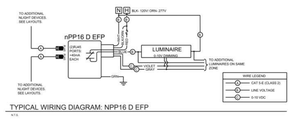

TYPICAL WIRING DIAGRAM: NPP16 D EFP

N.T.S.

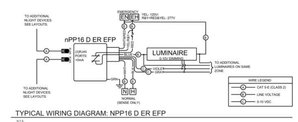

TYPICAL WIRING DIAGRAM: NPP16 D ER EFP

N.T.S.

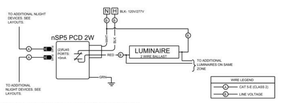

TYPICAL WIRING DIAGRAM: NSP5 PCD 2W

N.T.S.

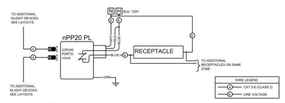

TYPICAL WIRING DIAGRAM: NPP20 PL

N.T.S.

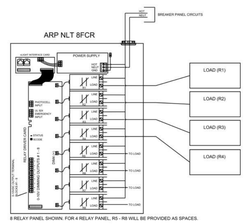

8 RELAY PANEL SHOWN. FOR 4 RELAY PANEL, R5 - R8 WILL BE PROVIDED AS SPACES.

TYPICAL DIAGRAM: ARP NLT 4FCR/8FCR

N.T.S.

NLIGHT ECLYPSE (NECY)

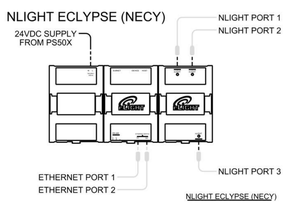

NBRG 8 Bridge

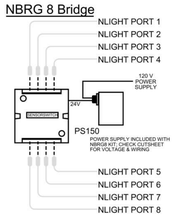

NLIGHT NETWORK RISER

N.T.S.

SYMBOLS KEY:
S = LAN EQUIPMENT
G = NLIGHT ECLYPSE (NECY)
B = NLIGHT BRIDGE (NBRG 8)

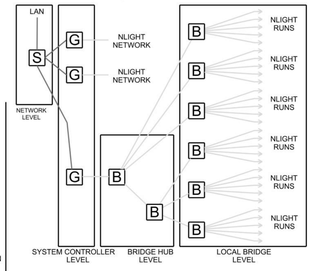

NLIGHT ECLYPSE (NECY)

NECY HAS BEEN SHOWN HERE AS TYPICAL AND INDICATIVE OF CONNECTION TYPES. PLEASE REFER TO THE NECY SPECIFICATION SHEETFOR MODEL SPECIFIC FEATURES. THE NECY HAS THREE NLIGHT PORTS; PORT 1 IS TYPICALLY USED TO HOST THE NLIGHT NETWORK; PORT 2 IS TYPICALLY LEFT SPARE, AND PORT 3 IS TYPICALLY RESERVED FOR AN NGWY2 GFX TOUCHSCREENTWO ETHERNET PORTS ARE AVAILABLE WITH A BUILT-IN ETHERNET SWITCH. THE ETHERNET PORTS MAY BE USED TO CONNECT TO A BUILDING LAN, BUILDING MANAGEMENT SYSTEM, OR A PERSONAL COMPUTER.

NLIGHT BRIDGE (NBRG 8)

THE NBRG 8 BRIDGE FEATURES 8 NLIGHT PORTS. ONE PORT IS RESERVED FOR UPSTREAM COMMUNICATION, AND ANY NUMBER OF THE REMAINING 7 CAN BE USED FOR DOWNSTREAM COMMUNICATION. ALLOWANCE OF AT LEAST ONE SPARE PORT IS TYPICAL.

NETWORK LEVEL

ALL NLIGHT GATEWAY DEVICES (NECY) ARE CONNECTED OVER A LOCAL AREA NETWORK. COMPUTERS ON THIS LEVEL MAY CONNECT THROUGH SENSORVIEW AND BUILDING AUTOMATION SYSTEMS MAY ACCESS SYSTEM INFORMATION OVER BACNET/IP WHERE APPLICABLE AND WITH PROPER NECY OPTIONS (SEE NECY SPECIFICATION SHEET FOR MORE INFORMATION).

SYSTEM CONTROLLER LEVEL

NECY ON THIS LEVEL WILL HOST AN NLIGHT NETWORK. DEVICES ON THIS LEVEL SHOULD BE LOCATED ON THE SAME SUB NETWORK (SUBNET).

BRIDGE HUB LEVEL

NLIGHT BRIDGES ON THIS LEVEL FUNCTION AS HUBS IN A STAR TOPOLOGY. THE NLIGHT NETWORK HOSTED BY THE NECY MUST BE ROUTED TO EACH BRIDGE ON THE LOCAL BRIDGE LEVEL. EACH BRIDGE HUB WILL UTILIZE ONE PORT TO RUN UPSTREAM (TOWARDS THE NECY) AND ANY NUMBER OF THE REMAINING 7 PORTS TO FEED DOWNSTREAM RUNS (TOWARDS NLIGHT ZONE). LARGE SYSTEMS WILL OFTEN USE A TIERED APPROACH WITH BRIDGE HUBS RUNNING TO ADDITIONAL BRIDGE HUBS. IN THESE SITUATIONS, THE MAXIMUM NUMBER OF BRIDGE HUB TIERS IS 8.

LOCAL BRIDGE LEVEL

NLIGHT BRIDGES ON THIS LEVEL UTILIZE ONE PORT TO RUN UPSTREAM (TOWARDS BRIDGE HUBS) AND ANY NUMBER OF THE REMAINING 7 PORTS TO FACILITATE NLIGHT ZONES CONSISTING OF CAT5E-DAISY-CHAINED NLIGHT LIGHTING CONTROL DEVICES.

Disclaimer

THIS CONTROLS SYSTEM LAYOUT DIAGRAM IS NOT A PROFESSIONAL ENGINEERING DRAWING, AND IS PROVIDED ONLY FOR INFORMATIONAL PURPOSES AND TO HELP THE CUSTOMER OR END-USER (AS APPLICABLE) UNDERSTAND HOW VARIOUS CONTROLS DEVICES ARE ARRANGED AND CONNECT TO EACH OTHER. THIS CONTROLS SYSTEM LAYOUT DIAGRAM IS STRICTLY BASED ON THE INFORMATION PROVIDED TO ACUITY BRANDS, AND IS PROVIDED WITHOUT WARRANTY AS TO ACCURACY, COMPLETENESS, RELIABILITY OR OTHERWISE. IF THE INFORMATION (INCLUDING BUT NOT LIMITED TO FLOOR-PLANS, REFLECTED CEILING PLANS, ELECTRICAL PLANS AND SPECIFICATIONS) PROVIDED TO ACUITY BRANDS IS INCOMPLETE OR NOT CURRENT (I.E., NEWER VERSIONS EXIST), THE ACCURACY OF THE LAYOUT DIAGRAM MAY BE ADVERSELY AFFECTED. ONCE THIS CONTROLS SYSTEM LAYOUT DIAGRAM IS RECEIVED BY THE CUSTOMER OR END-USER (AS APPLICABLE), IT IS THE OBLIGATION OF THE CUSTOMER OR END-USER (AS APPLICABLE) TO CONSULT WITH A PROFESSIONAL ENGINEERING ADVISOR TO DETERMINE WHETHER THE PROPOSED DESIGN MEETS THE APPLICABLE PROJECT REQUIREMENTS FOR THE CONTROLS SYSTEMS PERFORMANCE, CODE COMPLIANCE, SAFETY, SUITABILITY AND EFFECTIVENESS FOR USE IN A PARTICULAR APPLICATION. IN NO EVENT WILL ACUITY BRANDS BE RESPONSIBLE FOR ANY LOSS RESULTING FROM ANY USE OF THIS CONTROLS SYSTEM LAYOUT DIAGRAM.

PINNEY POOL REPLACEMENT
RIDGECREST, CA

Drawing Type: Control Layout
Prepared For: BUDLONG AND ASSOCIATES

Date: 2/8/2024
Scale: NOT TO SCALE
Drawn By: SKD
Project #: 02062024
DWG Ref:
Sheet: LC1

Created in Visual Controls

ELECTRICAL LIGHTING CONTROL DIAGRAMS
SCALE:NTS

1
E2.08

AGENCY

REVIEWED FOR CODE COMPLIANCE BY: WILLDAN ENGINEERING

Approval of these plans & specifications shall not be construed to be a permit for, or an approval of any violation of any Federal, State, County or City laws or ordinances. One set of approved plans must be kept on the job until completion.

10:06:41 AM Jul 21, 2025

FLEWELLING & MOODY
architecture planning interiors

HEADQUARTERS OFFICE:
99 S. Lake Avenue, Suite 300
Pasadena, CA 91101
Phone: 323.543.8300
E-Mail: fm-pasadena@flewelling-moody.com

ANTELOPE VALLEY OFFICE:
1035 West Lancaster Boulevard
Lancaster, California 93534
Phone: 661.949.0771
E-Mail: fm-lancaster@flewelling-moody.com

An Employee Owned Corporation

ARCHITECT

CONSULTANT

Budlong
An MBE|SBE|DBE|LSBE Firm
Glendale|Downtown LA|Fremont|Camarillo
WWW.BUDLONG.COM
Job No. 23-140

REGISTERED PROFESSIONAL ENGINEER — BRIAN H. CHRISTIAN — E 22864 — 12/31/25 — ELECTRICAL — STATE OF CA

Drawn by: Author
Check by: Checker

Revisions

No.	Date	Description
	05/09/24	90% CD
	08/05/24	100% CD
	11/25/24	100% CD V2
	01/31/25	100% CD V3

All dimensions must be checked at the job by the contractor who accepts full responsibility for their accuracy under the contract. These plans & the specifications in connection therewith have been prepared for a specific site. Any and all responsibility for their use in whole or in part on any other site is hereby disclaimed by Flewelling & Moody.

CITY OF RIDGECREST

SGT. JOHN PINNEY MEMORIAL POOL REPLACEMENT

205 S WARNER ST, RIDGECREST, CA 93555

Drawing Title

ELECTRICAL LIGHTING CONTROL DIAGRAMS

Job No. 3055-0100
Sheet No. **E2.08**
Date 05/09/2025

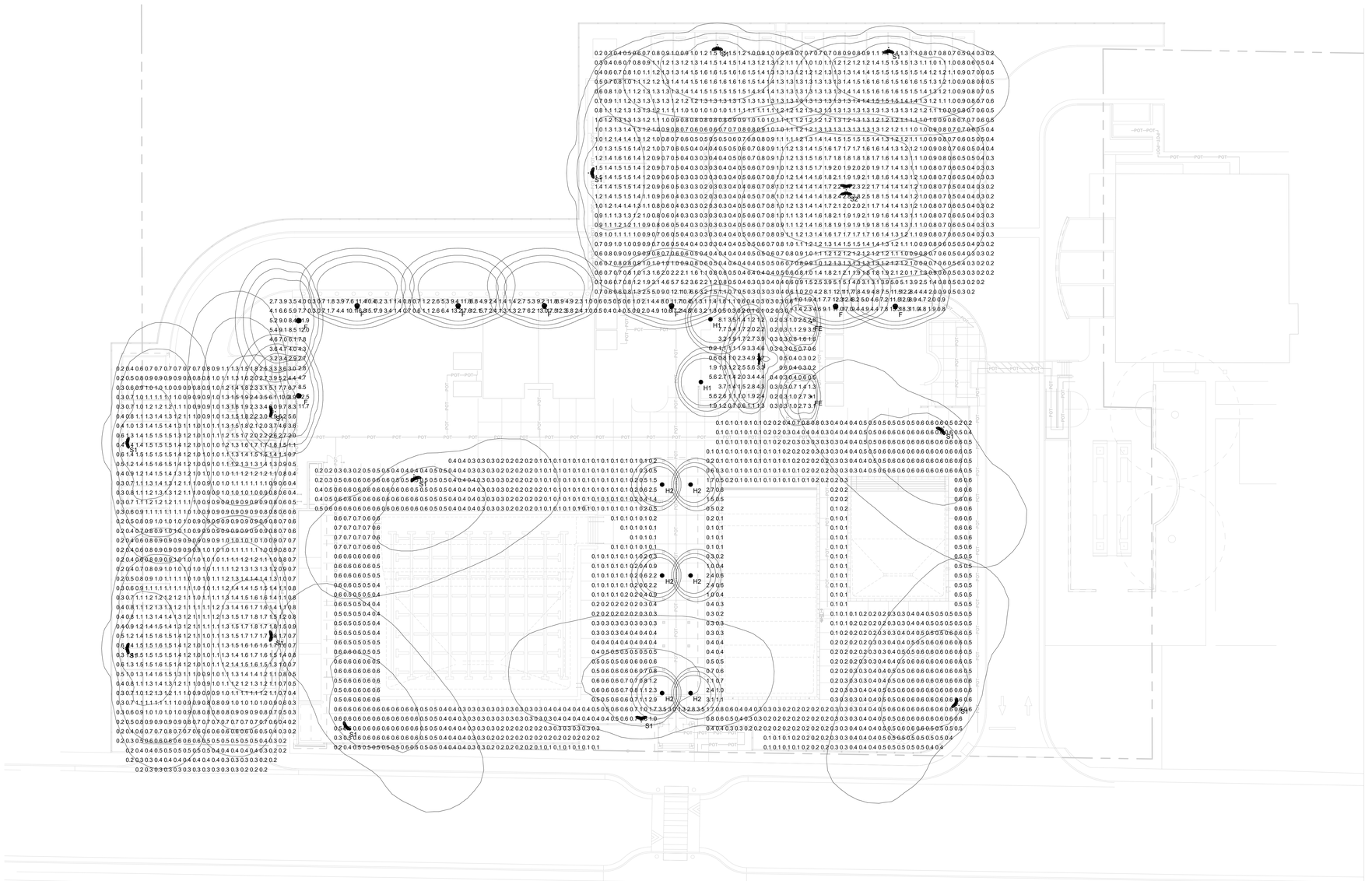

ELECTRICAL SITE LIGHTING PHOTOMETRICS

SCALE: 1" = 20'-0"

1 / E3.01

N

STATISTICS						
DESCRIPTION	SYMBOL	AVG	MAX	MIN	MAX/MIN	AVG/MIN
EXIT TO PARKING	+	1.0 fc	3.5 fc	0.2 fc	17.5:1	5.0:1
OUTDOOR SITTING AREA	+	2.5 fc	8.1 fc	0.2 fc	40.5:1	12.5:1
PARKING ZONE-1	+	1.1 fc	10.0 fc	0.2 fc	50.0:1	5.5:1
PARKING ZONE-2	+	1.2 fc	12.2 fc	0.2 fc	61.0:1	6.0:1
POOL DECK AREA	+	0.4 fc	3.5 fc	0.1 fc	35.0:1	4.0:1
STORAGE BUILDING FACADE	+	7.4 fc	18.3 fc	0.8 fc	22.9:1	9.3:1
COMMUNITY BUILDING FACADE	+	4.9 fc	17.6 fc	0.1 fc	176.0:1	49.0:1

AGENCY

REVIEWED FOR CODE COMPLIANCE BY: WILLDAN ENGINEERING

Approval of these plans & specifications shall not be construed to be a permit for, or an approval of any violation of any Federal, State, County or City laws or ordinances. One set of approved plans must be kept on the job until completion.

10:06:43 AM Jul 21, 2025

FLEWELLING & MOODY
architecture planning interiors

HEADQUARTERS OFFICE:
99 S. Lake Avenue, Suite 300
Pasadena, CA 91101
Phone: 323.543.8300
E-Mail: fm-pasadena@flewelling-moody.com

ANTELOPE VALLEY OFFICE:
1035 West Lancaster Boulevard
Lancaster, California 93534
Phone: 661.949.0771
E-Mail: fm-lancaster@flewelling-moody.com

An Employee Owned Corporation

ARCHITECT

CONSULTANT

Budlong
An MBE|SBE|DBE|LSBE Firm
Glendale|Downtown LA|Fremont|Camarillo
W W W . B U D L O N G . C O M
Job No. 23-140

REGISTERED PROFESSIONAL ENGINEER — MARK H. CHRISTIAN — No. 22864 — ELECTRICAL — STATE OF CALIFORNIA

Drawn by: Author

Check by: Checker

Revisions

No.	Date	Description
	05/09/24	90% CD
	08/05/24	100% CD
	11/25/24	100% CD V2
	01/31/25	100% CD V3

All dimensions must be checked at the job by the contractor who accepts full responsibility for their accuracy under the contract. These plans & the specifications in connection therewith have been prepared for a specific site. Any and all responsibility for their use in whole or in part on any other site is hereby disclaimed by Flewelling & Moody.

CITY OF RIDGECREST

SGT. JOHN PINNEY MEMORIAL POOL REPLACEMENT

205 S WARNER ST, RIDGECREST, CA 93555

Drawing Title

ELECTRICAL SITE LIGHTING PHOTOMETRICS

Job No. 3055-0100

Sheet No. **E3.01**

Date 05/09/2025

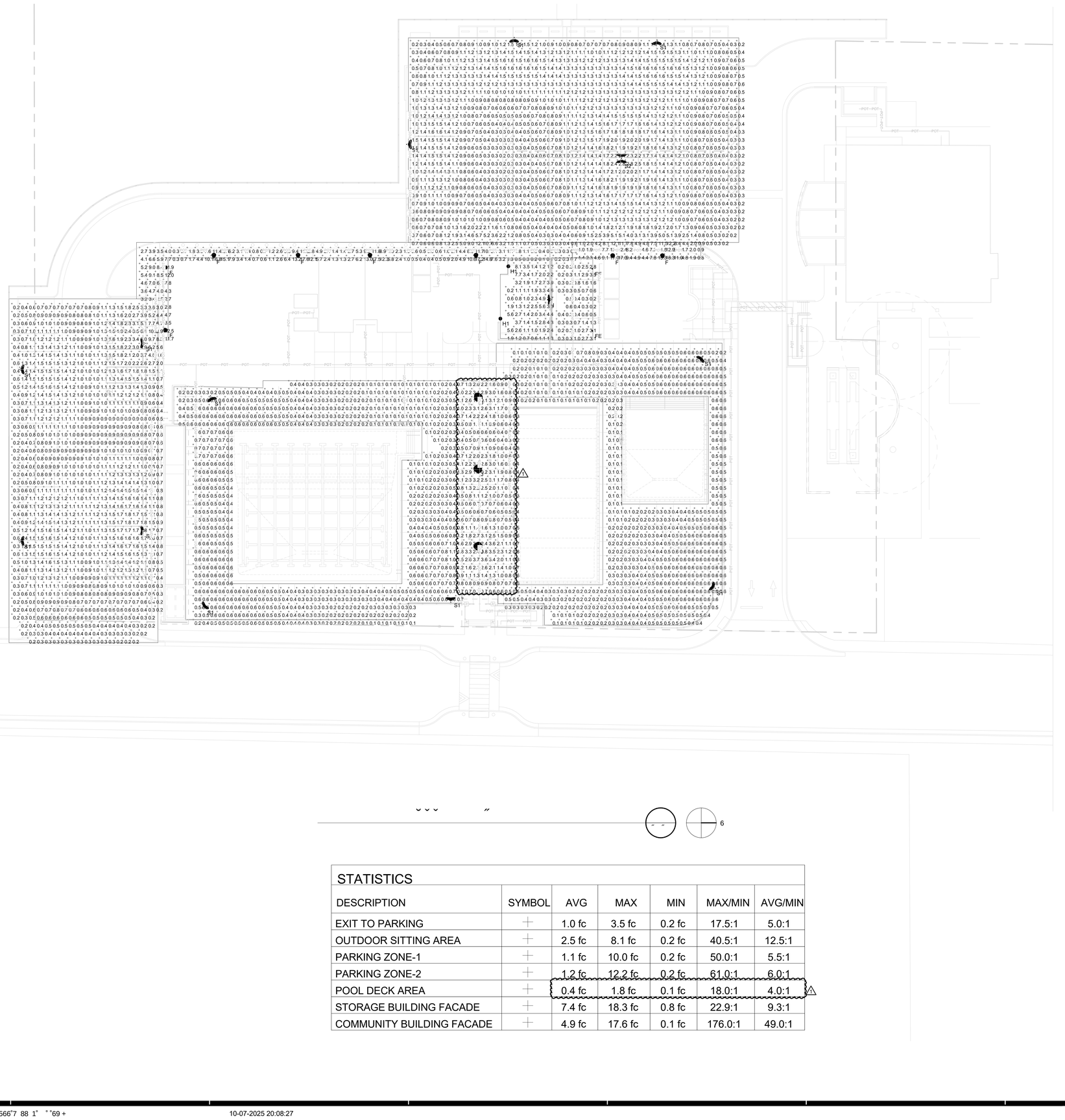
POT
POT-POT
POT-POT-POT
POT-POT-POT-POT
POT-POT-POT-POT-POT
POT-POT-POT-POT-POT-POT
POT-POT-POT-POT-POT-POT-POT
POT-POT-POT-POT-POT-POT-POT-POT
POT-POT-POT-POT-POT-POT-POT-POT-POT
POT-POT-POT-POT-POT-POT-POT-POT-POT-POT
POT-POT-POT-POT-POT-POT-POT-POT-POT-POT-POT
POT-POT-POT-POT-POT-POT-POT-POT-POT-POT-POT-POT
POT-POT-POT-POT-POT-POT-POT-POT-POT-POT-POT-POT-POT
POT-POT-POT-POT-POT-POT-POT-POT-POT-POT-POT-POT-POT-POT
POT-POT-POT-POT-POT-POT-POT-POT-POT-POT-POT-POT-POT-POT-POT
POT-POT-POT-POT-POT-POT-POT-POT-POT-POT-POT-POT-POT-POT-POT-POT
POT-POT-POT-POT-POT-POT-POT-POT-POT-POT-POT-POT-POT-POT-POT-POT-POT
POT-POT-POT-POT-POT-POT-POT-POT-POT-POT-POT-POT-POT-POT-POT-POT-POT-POT
POT-POT-POT-POT-POT-POT-POT-POT-POT-POT-POT-POT-POT-POT-POT-POT-POT-POT-POT
POT-POT-POT-POT-POT-POT-POT-POT-POT-POT-POT-POT-POT-POT-POT-POT-POT-POT-POT-POT
POT-POT-POT-POT-POT-POT-POT-POT-POT-POT-POT-POT-POT-POT-POT-POT-POT-POT-POT-POT-POT
POT-POT-POT-POT-POT-POT-POT-POT-POT-POT-POT-POT-POT-POT-POT-POT-POT-POT-POT-POT-POT-POT
POT-POT-POT-POT-POT-POT-POT-POT-POT-POT-POT-POT-POT-POT-POT-POT-POT-POT-POT-POT-POT-POT-POT
POT-POT-POT-POT-POT-POT-POT-POT-POT-POT-POT-POT-POT-POT-POT-POT-POT-POT-POT-POT-POT-POT-POT-POT
POT-POT-POT-POT-POT-POT-POT-POT-POT-POT-POT-POT-POT-POT-POT-POT-POT-POT-POT-POT-POT-POT-POT-POT-POT
POT-POT-POT-POT-POT-POT-POT-POT-POT-POT-POT-POT-POT-POT-POT-POT-POT-POT-POT-POT-POT-POT-POT-POT-POT-POT
POT-POT-POT-POT-POT-POT-POT-POT-POT-POT-POT-POT-POT-POT-POT-POT-POT-POT-POT-POT-POT-POT-POT-POT-POT-POT-POT
POT-POT-POT-POT-POT-POT-POT-POT-POT-POT-POT-POT-POT-POT-POT-POT-POT-POT-POT-POT-POT-POT-POT-POT-POT-POT-POT-POT
POT-POT-POT-POT-POT-POT-POT-POT-POT-POT-POT-POT-POT-POT-POT-POT-POT-POT-POT-POT-POT-POT-POT-POT-POT-POT-POT-POT-POT
POT-POT-POT-POT-POT-POT-POT-POT-POT-POT-POT-POT-POT-POT-POT-POT-POT-POT-POT-POT-POT-POT-POT-POT-POT-POT-POT-POT-POT-POT
POT-POT-POT-POT-POT-POT-POT-POT-POT-POT-POT-POT-POT-POT-POT-POT-POT-POT-POT-POT-POT-POT-POT-POT-POT-POT-POT-POT-POT-POT-POT
POT-POT-POT-POT-POT-POT-POT-POT-POT-POT-POT-POT-POT-POT-POT-POT-POT-POT-POT-POT-POT-POT-POT-POT-POT-POT-POT-POT-POT-POT-POT-POT
POT-POT-POT-POT-POT-POT-POT-POT-POT-POT-POT-POT-POT-POT-POT-POT-POT-POT-POT-POT-POT-POT-POT-POT-POT-POT-POT-POT-POT-POT-POT-POT-POT
POT-POT-POT-POT-POT-POT-POT-POT-POT-POT-POT-POT-POT-POT-POT-POT-POT-POT-POT-POT-POT-POT-POT-POT-POT-POT-POT-POT-POT-POT-POT-POT-POT-POT
POT-POT-POT-POT-POT-POT-POT-POT-POT-POT-POT-POT-POT-POT-POT-POT-POT-POT-POT-POT-POT-POT-POT-POT-POT-POT-POT-POT-POT-POT-POT-POT-POT-POT-POT
POT-POT-POT-POT-POT-POT-POT-POT-POT-POT-POT-POT-POT-POT-POT-POT-POT-POT-POT-POT-POT-POT-POT-POT-POT-POT-POT-POT-POT-POT-POT-POT-POT-POT-POT-POT
POT-POT-POT-POT-POT-POT-POT-POT-POT-POT-POT-POT-POT-POT-POT-POT-POT-POT-POT-POT-POT-POT-POT-POT-POT-POT-POT-POT-POT-POT-POT-POT-POT-POT-POT-POT-POT
POT-POT-POT-POT-POT-POT-POT-POT-POT-POT-POT-POT-POT-POT-POT-POT-POT-POT-POT-POT-POT-POT-POT-POT-POT-POT-POT-POT-POT-POT-POT-POT-POT-POT-POT-POT-POT-POT
POT-POT-POT-POT-POT-POT-POT-POT-POT-POT-POT-POT-POT-POT-POT-POT-POT-POT-POT-POT-POT-POT-POT-POT-POT-POT-POT-POT-POT-POT-POT-POT-POT-POT-POT-POT-POT-POT-POT
POT-POT-POT-POT-POT-POT-POT-POT-POT-POT-POT-POT-POT-POT-POT-POT-POT-POT-POT-POT-POT-POT-POT-POT-POT-POT-POT-POT-POT-POT-POT-POT-POT-POT-POT-POT-POT-POT-POT-POT
POT-POT-POT-POT-POT-POT-POT-POT-POT-POT-POT-POT-POT-POT-POT-POT-POT-POT-POT-POT-POT-POT-POT-POT-POT-POT-POT-POT-POT-POT-POT-POT-POT-POT-POT-POT-POT-POT-POT-POT-POT
POT-POT-POT-POT-POT-POT-POT-POT-POT-POT-POT-POT-POT-POT-POT-POT-POT-POT-POT-POT-POT-POT-POT-POT-POT-POT-POT-POT-POT-POT-POT-POT-POT-POT-POT-POT-POT-POT-POT-POT-POT-POT
POT-POT-POT-POT-POT-POT-POT-POT-POT-POT-POT-POT-POT-POT-POT-POT-POT-POT-POT-POT-POT-POT-POT-POT-POT-POT-POT-POT-POT-POT-POT-POT-POT-POT-POT-POT-POT-POT-POT-POT-POT-POT-POT
POT-POT-POT-POT-POT-POT-POT-POT-POT-POT-POT-POT-POT-POT-POT-POT-POT-POT-POT-POT-POT-POT-POT-POT-POT-POT-POT-POT-POT-POT-POT-POT-POT-POT-POT-POT-POT-POT-POT-POT-POT-POT-POT-POT
POT-POT-POT-POT-POT-POT-POT-POT-POT-POT-POT-POT-POT-POT-POT-POT-POT-POT-POT-POT-POT-POT-POT-POT-POT-POT-POT-POT-POT-POT-POT-POT-POT-POT-POT-POT-POT-POT-POT-POT-POT-POT-POT-POT-POT
POT-POT-POT-POT-POT-POT-POT-POT-POT-POT-POT-POT-POT-POT-POT-POT-POT-POT-POT-POT-POT-POT-POT-POT-POT-POT-POT-POT-POT-POT-POT-POT-POT-POT-POT-POT-POT-POT-POT-POT-POT-POT-POT-POT-POT-POT
POT-POT-POT-POT-POT-POT-POT-POT-POT-POT-POT-POT-POT-POT-POT-POT-POT-POT-POT-POT-POT-POT-POT-POT-POT-POT-POT-POT-POT-POT-POT-POT-POT-POT-POT-POT-POT-POT-POT-POT-POT-POT-POT-POT-POT-POT-POT
POT-POT-POT-POT-POT-POT-POT-POT-POT-POT-POT-POT-POT-POT-POT-POT-POT-POT-POT-POT-POT-POT-POT-POT-POT-POT-POT-POT-POT-POT-POT-POT-POT-POT-POT-POT-POT-POT-POT-POT-POT-POT-POT-POT-POT-POT-POT-POT
POT-POT-POT-POT-POT-POT-POT-POT-POT-POT-POT-POT-POT-POT-POT-POT-POT-POT-POT-POT-POT-POT-POT-POT-POT-POT-POT-POT-POT-POT-POT-POT-POT-POT-POT-POT-POT-POT-POT-POT-POT-POT-POT-POT-POT-POT-POT-POT-POT
POT-POT-POT-POT-POT-POT-POT-POT-POT-POT-POT-POT-POT-POT-POT-POT-POT-POT-POT-POT-POT-POT-POT-POT-POT-POT-POT-POT-POT-POT-POT-POT-POT-POT-POT-POT-POT-POT-POT-POT-POT-POT-POT-POT-POT-POT-POT-POT-POT-POT
POT-POT-POT-POT-POT-POT-POT-POT-POT-POT-POT-POT-POT-POT-POT-POT-POT-POT-POT-POT-POT-POT-POT-POT-POT-POT-POT-POT-POT-POT-POT-POT-POT-POT-POT-POT-POT-POT-POT-POT-POT-POT-POT-POT-POT-POT-POT-POT-POT-POT-POT
POT-POT-POT-POT-POT-POT-POT-POT-POT-POT-POT-POT-POT-POT-POT-POT-POT-POT-POT-POT-POT-POT-POT-POT-POT-POT-POT-POT-POT-POT-POT-POT-POT-POT-POT-POT-POT-POT-POT-POT-POT-POT-POT-POT-POT-POT-POT-POT-POT-POT-POT-POT
POT-POT-POT-POT-POT-POT-POT-POT-POT-POT-POT-POT-POT-POT-POT-POT-POT-POT-POT-POT-POT-POT-POT-POT-POT-POT-POT-POT-POT-POT-POT-POT-POT-POT-POT-POT-POT-POT-POT-POT-POT-POT-POT-POT-POT-POT-POT-POT-POT-POT-POT-POT-POT
POT-POT-POT-POT-POT-POT-POT-POT-POT-POT-POT-POT-POT-POT-POT-POT-POT-POT-POT-POT-POT-POT-POT-POT-POT-POT-POT-POT-POT-POT-POT-POT-POT-POT-POT-POT-POT-POT-POT-POT-POT-POT-POT-POT-POT-POT-POT-POT-POT-POT-POT-POT-POT-POT
POT-POT-POT-POT-POT-POT-POT-POT-POT-POT-POT-POT-POT-POT-POT-POT-POT-POT-POT-POT-POT-POT-POT-POT-POT-POT-POT-POT-POT-POT-POT-POT-POT-POT-POT-POT-POT-POT-POT-POT-POT-POT-POT-POT-POT-POT-POT-POT-POT-POT-POT-POT-POT-POT-POT
POT-POT-POT-POT-POT-POT-POT-POT-POT-POT-POT-POT-POT-POT-POT-POT-POT-POT-POT-POT-POT-POT-POT-POT-POT-POT-POT-POT-POT-POT-POT-POT-POT-POT-POT-POT-POT-POT-POT-POT-POT-POT-POT-POT-POT-POT-POT-POT-POT-POT-POT-POT-POT-POT-POT-POT
POT-POT-POT-POT-POT-POT-POT-POT-POT-POT-POT-POT-POT-POT-POT-POT-POT-POT-POT-POT-POT-POT-POT-POT-POT-POT-POT-POT-POT-POT-POT-POT-POT-POT-POT-POT-POT-POT-POT-POT-POT-POT-POT-POT-POT-POT-POT-POT-POT-POT-POT-POT-POT-POT-POT-POT-POT
POT-

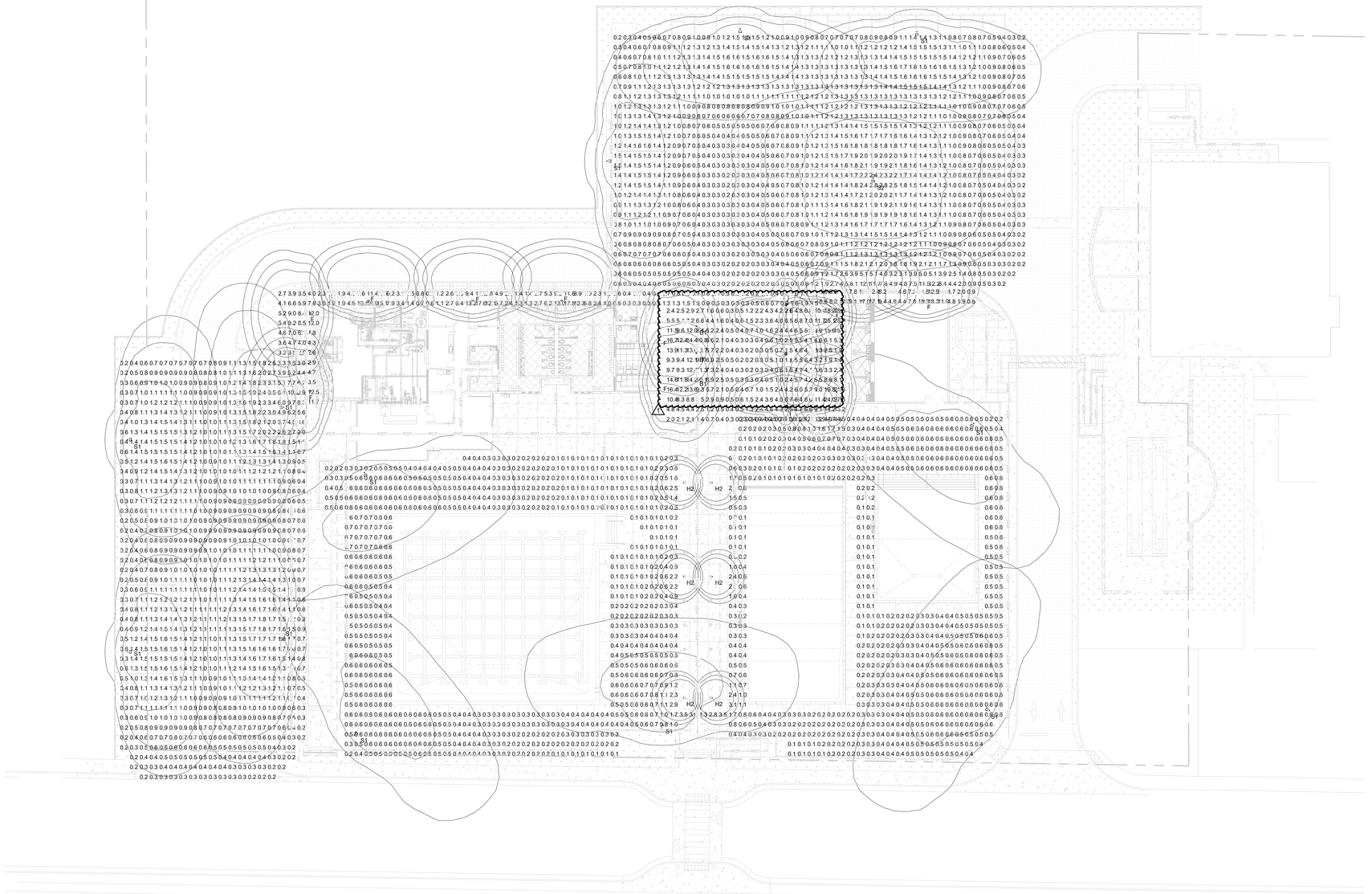

ELECTRICAL SITE LIGHTING PHOTOMETRICS ALT 6

SCALE: 1" = 20'-0"

1 / E3.01A6

N

STATISTICS						
DESCRIPTION	SYMBOL	AVG	MAX	MIN	MAX/MIN	AVG/MIN
PARKING ZONE-1	+	1.1 fc	10.0 fc	0.2 fc	50.0:1	5.5:1
PARKING ZONE-2	+	1.1 fc	12.2 fc	0.2 fc	61.0:1	5.5:1
PATH OF TRAVEL	+	5.2 fc	28.9 fc	0.2 fc	144.5:1	26.0:1
POOL DECK AREA	+	0.5 fc	4.7 fc	0.1 fc	47.0:1	5.0:1
STORAGE BUILDING FACADE	+	8.1 fc	18.3 fc	0.8 fc	22.9:1	10.1:1
COMMUNITY BUILDING FACADE	+	4.2 fc	17.6 fc	0.2 fc	88.0:1	21.0:1

AGENCY

FLEWELLING & MOODY
architecture planning interiors

HEADQUARTERS OFFICE:
99 S. Lake Avenue, Suite 300
Pasadena, CA 91101
Phone: 323.543.8300
E-Mail: fm-pasadena@flewelling-moody.com

ANTELOPE VALLEY OFFICE:
1035 West Lancaster Boulevard
Lancaster, California 93534
Phone: 661.949.0711
E-Mail: fm-lancaster@flewelling-moody.com

An Employee Owned Corporation

ARCHITECT

CONSULTANT

Budlong
An MBE|SBE|DBE|LSBE Firm
Glendale|Downtown LA|Fremont|Camarillo
WWW.BUDLONG.COM
Job No. 23-140

REGISTERED PROFESSIONAL ENGINEER MANAN H. CHRISTIAN E 22864 ELECTRICAL STATE OF CALIFORNIA

Drawn by: Author

Check by: Checker

Revisions

No.	Date	Description
1	08/27/2025	BID ALTERNATE

All dimensions must be checked at the job by the contractor who accepts full responsibility for their accuracy under the contract. These plans & the specifications in connection therewith have been prepared for a specific site. Any and all responsibility for their use in whole or in part on any other site is hereby disclaimed by Flewelling & Moody.

CITY OF RIDGECREST

SGT. JOHN PINNEY MEMORIAL POOL REPLACEMENT

205 S WARNER ST, RIDGECREST, CA 93555

Drawing Title

ELECTRICAL SITE LIGHTING PHOTOMETRICS ALT 6

Job No. 3055-0000

Sheet No. E3.01A6

Date 08/07/2024

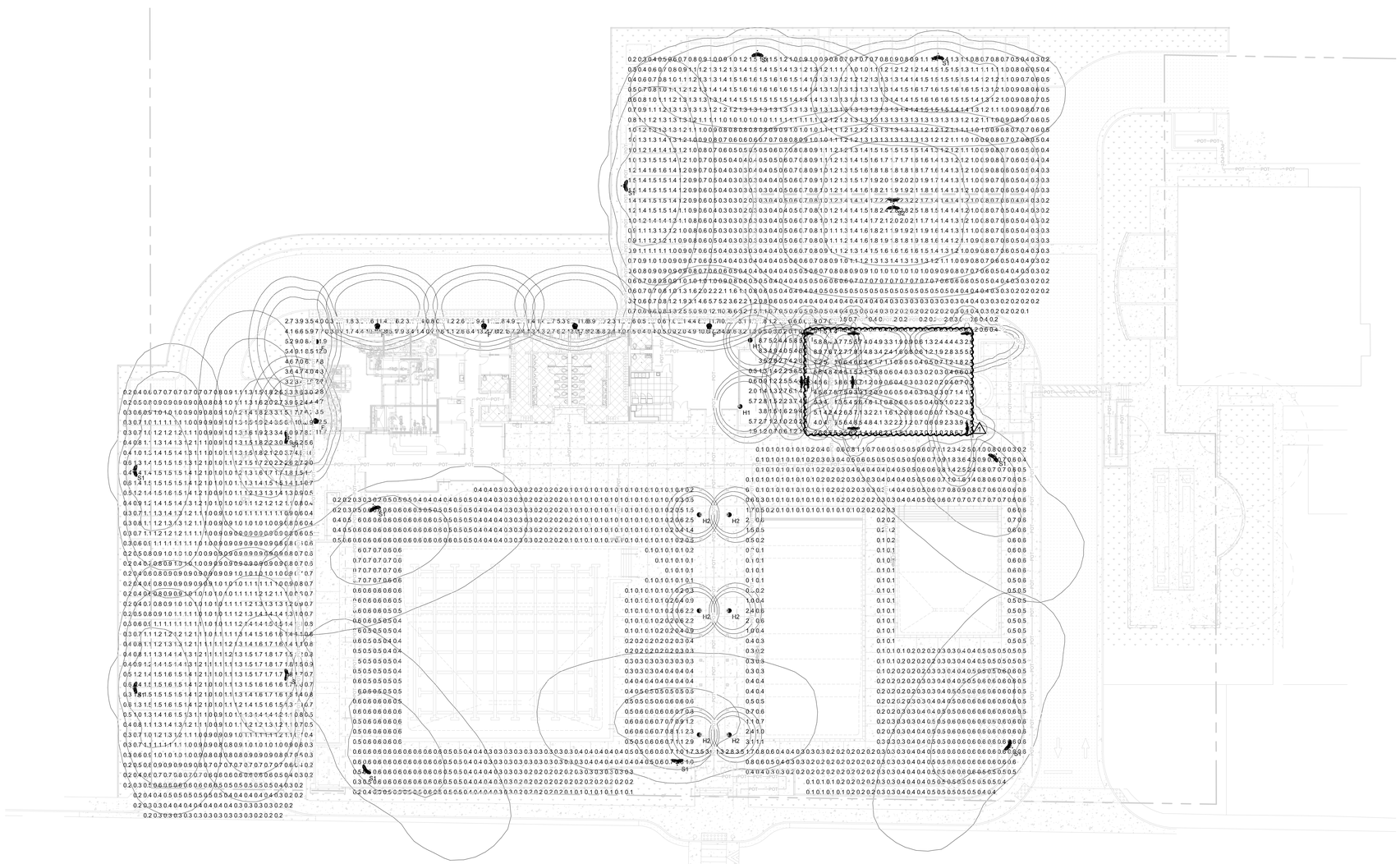

ELECTRICAL SITE LIGHTING PHOTOMETRICS ALT 7

SCALE: 1" = 20'-0"

1 / E3.01A7

N

STATISTICS

DESCRIPTION	SYMBOL	AVG	MAX	MIN	MAX/MIN	AVG/MIN
EXTERIOR LIGHTING	+	3.0 fc	9.7 fc	0.2 fc	48.5:1	15.0:1
OUTDOOR SITTING AREA	+	3.3 fc	8.7 fc	0.3 fc	29.0:1	11.0:1
PARKING ZONE-1	+	1.1 fc	10.0 fc	0.2 fc	50.0:1	5.5:1
PARKING ZONE-2	+	1.0 fc	12.1 fc	0.1 fc	121.0:1	10.0:1
POOL DECK AREA	+	0.5 fc	5.0 fc	0.1 fc	50.0:1	5.0:1
STORAGE BUILDING FACADE	+	0.5 fc	1.2 fc	0.2 fc	6.0:1	2.5:1
COMMUNITY BUILDING FACADE	+	4.9 fc	17.6 fc	0.1 fc	176.0:1	49.0:1

AGENCY

FLEWELLING & MOODY
architecture planning interiors

HEADQUARTERS OFFICE:
99 S. Lake Avenue, Suite 300
Pasadena, CA 91101
Phone: 323.543.8300
E-Mail: fm-pasadena@flewelling-moody.com

ANTELOPE VALLEY OFFICE:
1035 West Lancaster Boulevard
Lancaster, California 93534
Phone: 661.949.0771
E-Mail: fm-lancaster@flewelling-moody.com

An Employee Owned Corporation

ARCHITECT

CONSULTANT

Budlong
An MBE|SBE|DBE|LSBE Firm
Glendale|Downtown LA|Fremont|Camarillo
WWW.BUDLONG.COM
Job No. 23-140

REGISTERED PROFESSIONAL ENGINEER
MANAN H. CHRISTIAN
E 22864
9/30/25
ELECTRICAL
STATE OF CALIFORNIA

Drawn by: Author

Check by: Checker

Revisions

No.	Date	Description
1	08/27/2025	BID ALTERNATE

All dimensions must be checked at the job by the contractor who accepts full responsibility for their accuracy under the contract. These plans & the specifications in connection therewith have been prepared for a specific site. Any and all responsibility for their use in whole or in part on any other site is hereby disclaimed by Flewelling & Moody.

CITY OF RIDGECREST

SGT. JOHN PINNEY MEMORIAL POOL REPLACEMENT

205 S WARNER ST, RIDGECREST, CA 93555

Drawing Title

ELECTRICAL SITE LIGHTING PHOTOMETRICS ALT 7

Job No. 3055-0000

Sheet No. E3.01A7

Date 08/07/2024

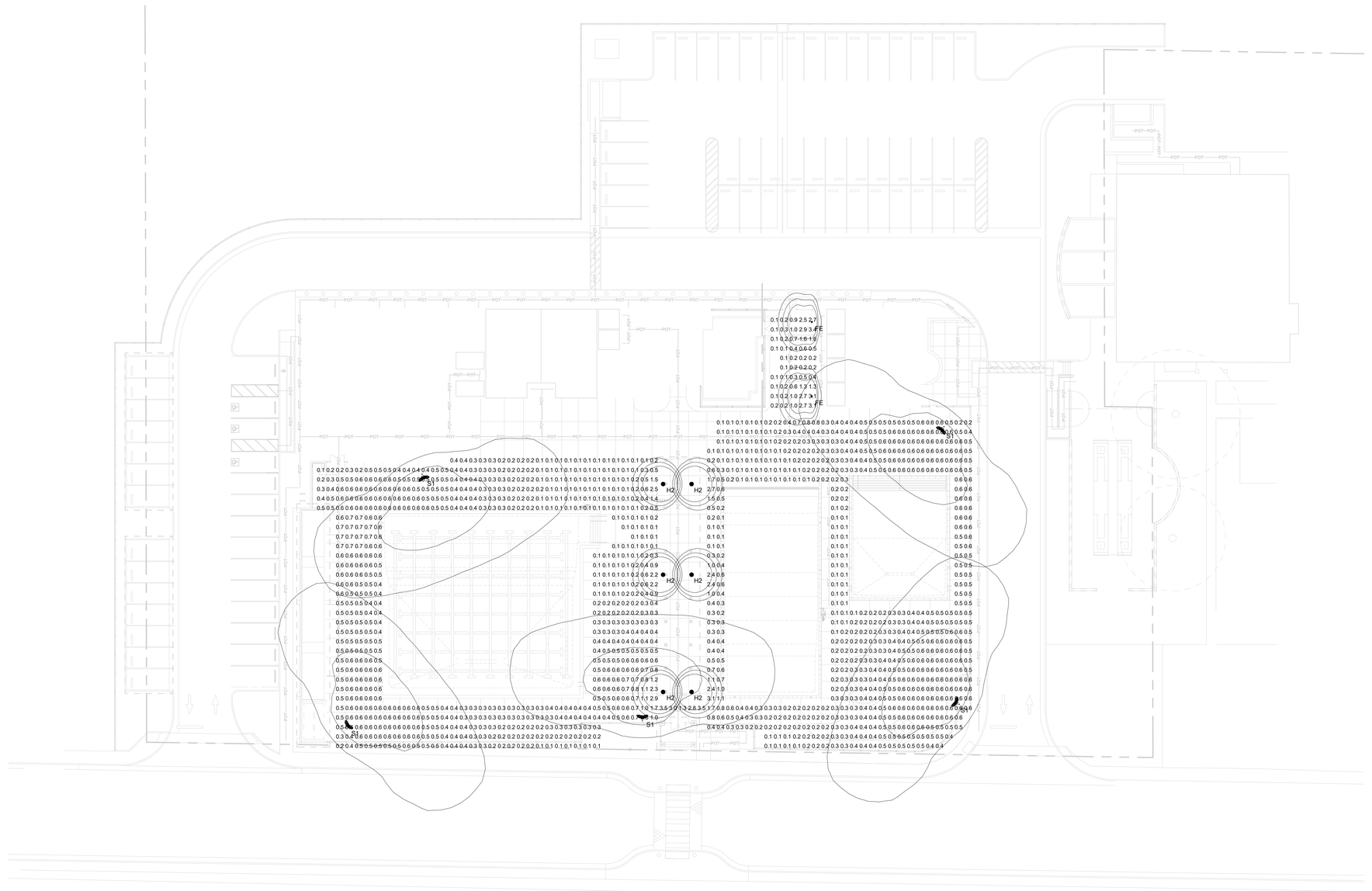
POOL
POOL DECK
POOL DECK
POOL DECK

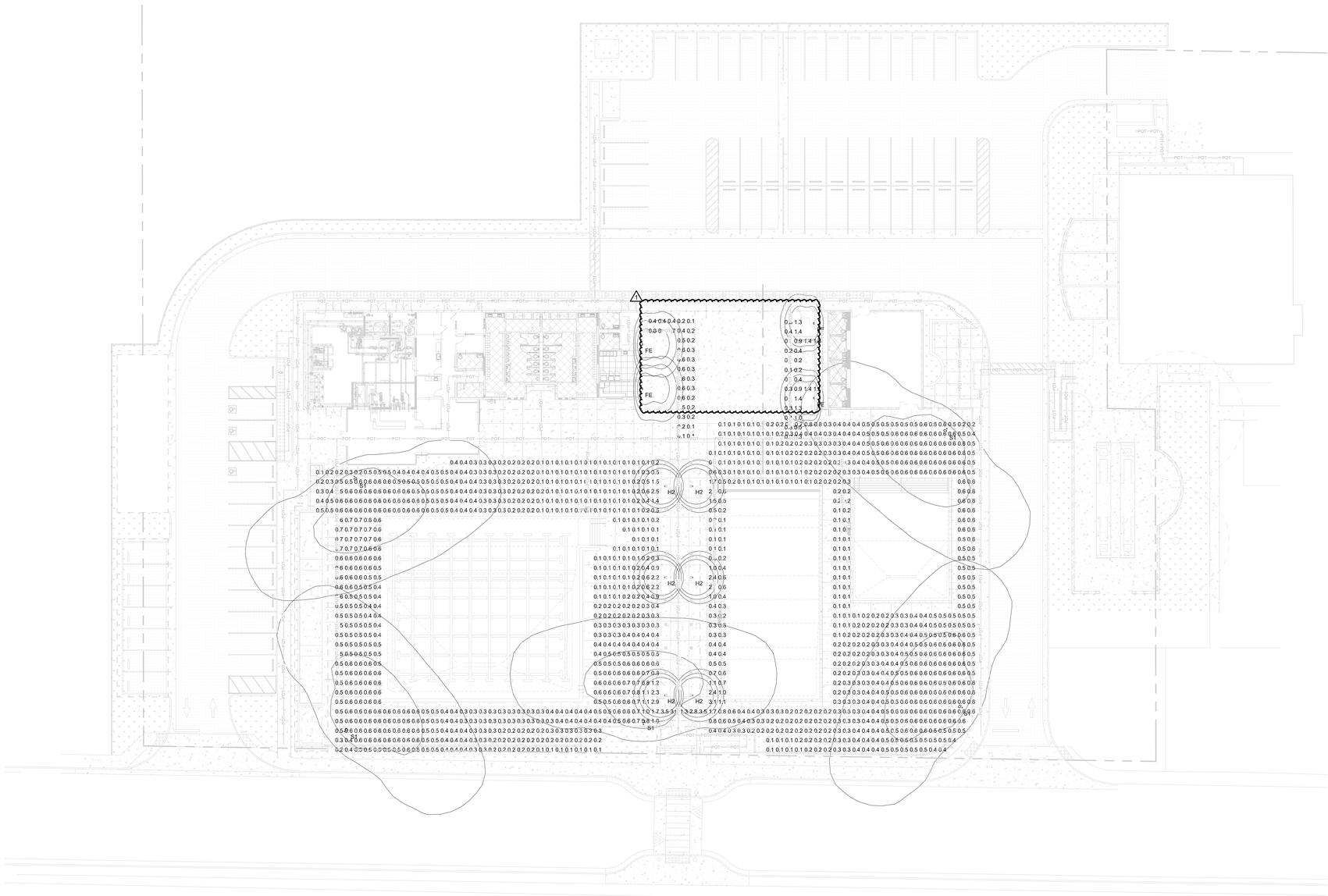

ELECTRICAL SITE EMERGENCY LIGHTING PHOTOMETRICS ALT 6

SCALE: 1" = 20'-0"

1 E3.02A6

N

STATISTICS						
DESCRIPTION	SYMBOL	AVG	MAX	MIN	MAX/MIN	AVG/MIN
PATHWAY 01-EMG	+	0.4 fc	0.8 fc	0.1 fc	8.0:1	4.0:1
PATHWAY 02-EMG	+	0.7 fc	1.6 fc	0.1 fc	16.0:1	7.0:1
POOL DECK AREA	+	0.4 fc	3.5 fc	0.1 fc	35.0:1	4.0:1

AGENCY

FLEWELLING & MOODY
architecture planning interiors

HEADQUARTERS OFFICE:
99 S. Lake Avenue, Suite 300
Pasadena, CA 91101
Phone: 323.543.8300
E-Mail: fm-pasadena@flewelling-moody.com

ANTELOPE VALLEY OFFICE:
1035 West Lancaster Bouldvard
Lancaster, California 93534
Phone: 661.949.0771
E-Mail: fm-lancaster@flewelling-moody.com

An Employee Owned Corporation

ARCHITECT

CONSULTANT

Budlong
An MBE|SBE|DBE|LSBE Firm
Glendale|Downtown LA|Fremont|Camarillo
W W W . B U D L O N G . C O M
Job No. 23-140

REGISTERED PROFESSIONAL ENGINEER
MANAN H. CHRISTIAN
E 22864
Exp. 9/30/25
ELECTRICAL
STATE OF CALIFORNIA

Drawn by: Author

Check by: Checker

Revisions

No.	Date	Description
	05/09/24	90% CD
	08/05/24	100% CD
	11/25/24	100% CD V2
	01/31/25	100% CD V3
1	08/27/2025	BID ALTERNATE

All dimensions must be checked at the job by the contractor who accepts full responsibility for their accuracy under the contract. These plans & the specifications in connection therewith have been prepared for a specific site. Any and all responsibility for their use in whole or in part on any other site is hereby disclaimed by Flewelling & Moody.

CITY OF RIDGECREST

SGT. JOHN PINNEY MEMORIAL POOL REPLACEMENT

205 S WARNER ST, RIDGECREST, CA 93555

Drawing Title

ELECTRICAL SITE EMERGENCY LIGHTING PHOTOMETRICS ALT 6

Job No. 3055-0000

Date 08/07/2024

Sheet No. **E3.02A6**

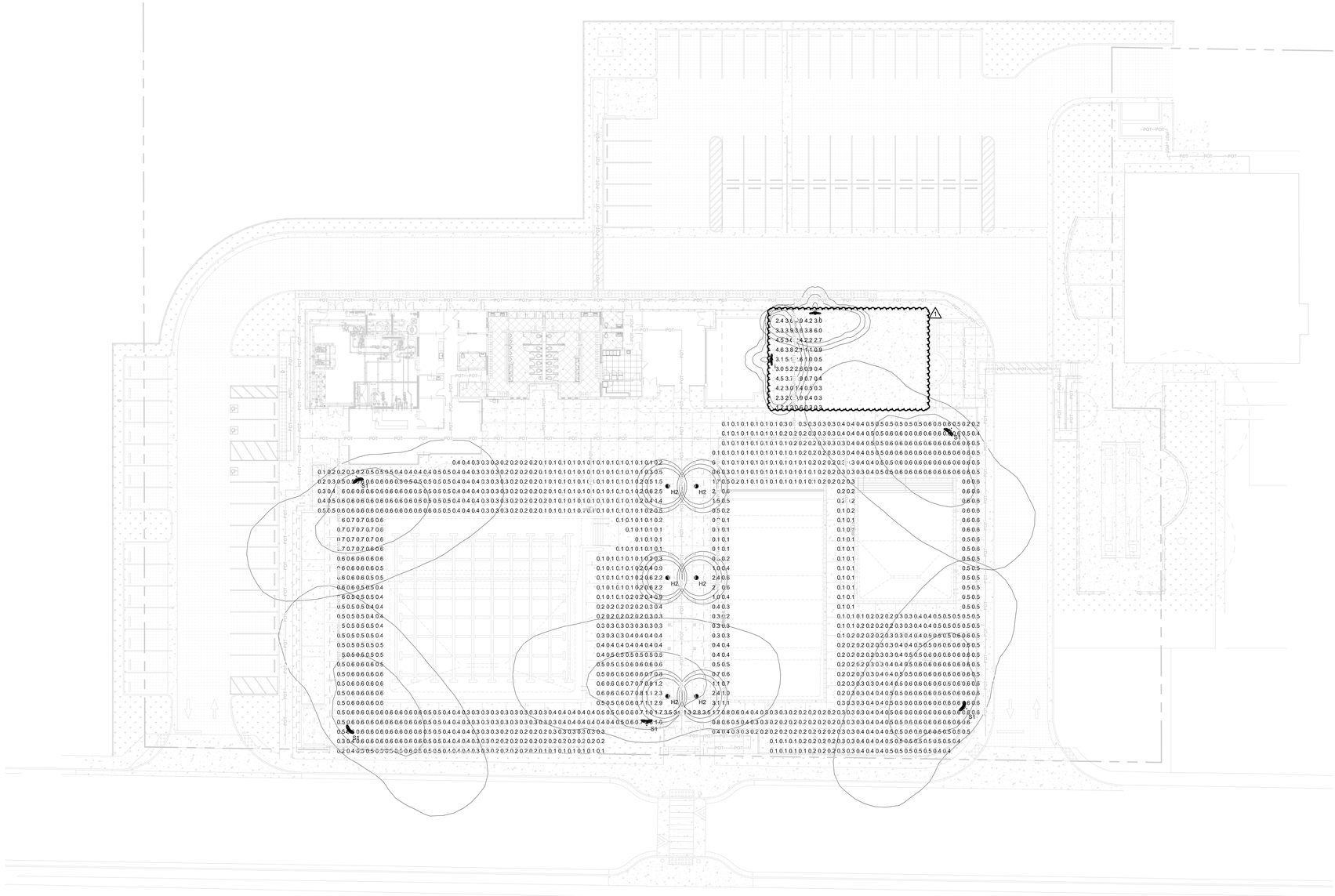

ELECTRICAL SITE EMERGENCY LIGHTING PHOTOMETRICS ALT 7

SCALE: 1" = 20'-0"

1 E3.02A7

N

STATISTICS						
DESCRIPTION	SYMBOL	AVG	MAX	MIN	MAX/MIN	AVG/MIN
EXTERIOR PATHWAY-EMERGENCY	+	2.4 fc	6.0 fc	0.3 fc	20.0:1	8.0:1
POOL DECK AREA	+	0.4 fc	3.5 fc	0.1 fc	35.0:1	4.0:1

AGENCY

FLEWELLING & MOODY
architecture planning interiors

HEADQUARTERS OFFICE:
99 S. Lake Avenue, Suite 300
Pasadena, CA 91101
Phone: 323.543.8300
E-Mail: fm-pasadena@flewelling-moody.com

ANTELOPE VALLEY OFFICE:
1035 West Lancaster Bouldvard
Lancaster, California 93534
Phone: 661.949.0771
E-Mail: fm-lancaster@flewelling-moody.com

An Employee Owned Corporation

ARCHITECT

CONSULTANT

Budlong
An MBE|SBE|DBE|LSBE Firm
Glendale|Downtown LA|Fremont|Camarillo
W W W . B U D L O N G . C O M
Job No. 23-140

REGISTERED PROFESSIONAL ENGINEER
MARK R. CHRISTIAN
No. E 22864
07/31/25
ELECTRICAL
STATE OF CALIFORNIA

Drawn by: Author

Check by: Checker

Revisions

No.	Date	Description
	05/09/24	90% CD
	08/05/24	100% CD
	11/25/24	100% CD V2
	01/31/25	100% CD V3
1	08/27/2025	BID ALTERNATE

All dimensions must be checked at the job by the contractor who accepts full responsibility for their accuracy under the contract. These plans & the specifications in connection therewith have been prepared for a specific site. Any and all responsibility for their use in whole or in part on any other site is hereby disclaimed by Flewelling & Moody.

CITY OF RIDGECREST

SGT. JOHN PINNEY MEMORIAL POOL REPLACEMENT

205 S WARNER ST, RIDGECREST, CA 93555

Drawing Title

ELECTRICAL SITE EMERGENCY LIGHTING PHOTOMETRICS ALT 7

Job No. 3055-0000

Sheet No. **E3.02A7**

Date 08/07/2024

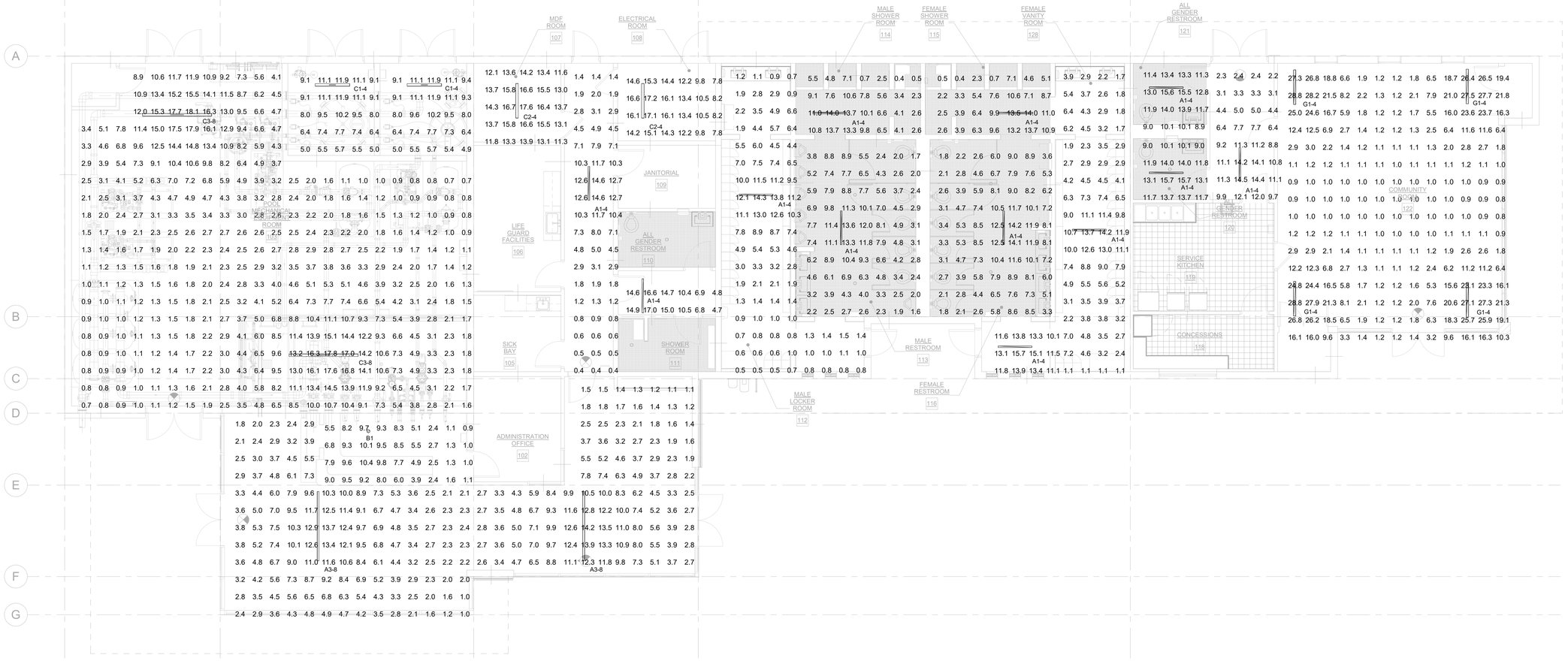

ELECTRICAL COMMUNITY BUILDING EMERGENCY PHOTOMETRICS

SCALE: 3/16" = 1'-0"

1 / E3.03

N

STATISTICS

DESCRIPTION	SYMBOL	AVG	MAX	MIN	MAX/MIN	AVG/MIN
ACCESSIBLE RESTRM-2	+	12.4 fc	15.7 fc	9.0 fc	1.7:1	1.4:1
ACID STORAGE	+	8.5 fc	11.9 fc	4.9 fc	2.4:1	1.7:1
CHECK IN	+	5.9 fc	10.4 fc	0.9 fc	11.6:1	6.6:1
CHLORINE STORAGE	+	8.5 fc	11.9 fc	5.0 fc	2.4:1	1.7:1
COMMUNITY RM	+	7.0 fc	28.8 fc	0.8 fc	36.0:1	8.8:1
ELECT RM	+	13.0 fc	17.2 fc	7.8 fc	2.2:1	1.7:1
HALL-1	+	4.8 fc	14.6 fc	0.4 fc	36.5:1	12.0:1
HALL-2	+	8.0 fc	14.5 fc	2.2 fc	6.6:1	3.6:1
MAIN ENTRY LOBBY	+	5.3 fc	14.2 fc	1.0 fc	14.2:1	5.3:1
MDF RM	+	14.3 fc	17.6 fc	11.3 fc	1.6:1	1.3:1
MENS LOCKER RM	+	4.1 fc	14.3 fc	0.5 fc	28.6:1	8.2:1
MENS RESTRM	+	5.8 fc	13.6 fc	1.6 fc	8.5:1	3.6:1
MENS SHOWER RM	+	6.8 fc	14.0 fc	0.4 fc	35.0:1	17.0:1
POOL EQ RM	+	4.7 fc	18.1 fc	0.7 fc	25.9:1	6.7:1
UNKNOWN ROOM	+	11.4 fc	17.0 fc	4.7 fc	3.6:1	2.4:1
WOMENS LOCKER RM	+	6.4 fc	15.7 fc	1.1 fc	14.3:1	5.8:1
WOMENS RESTRM	+	6.6 fc	14.2 fc	1.8 fc	7.9:1	3.7:1
WOMENS SHOWER	+	6.7 fc	14.0 fc	0.4 fc	35.0:1	16.8:1
ACCESSIBLE RESTRM-1	+	12.2 fc	15.6 fc	8.9 fc	1.8:1	1.4:1

AGENCY

REVIEWED FOR CODE COMPLIANCE BY: WILLDAN ENGINEERING

Approval of these plans & specifications shall not be construed to be a permit for, or an approval of any violation of any Federal, State, County or City laws or ordinances. One set of approved plans must be kept on the job until completion.

10:06:46 AM Jul 21, 2025

FLEWELLING & MOODY
architecture planning interiors

HEADQUARTERS OFFICE:
99 S. Lake Avenue, Suite 300
Pasadena, CA 91101
Phone: 323.543.8300
E-Mail: fm-pasadena@flewelling-moody.com

ANTELOPE VALLEY OFFICE:
1035 West Lancaster Boulevard
Lancaster, California 93534
Phone: 661.949.0771
E-Mail: fm-lancaster@flewelling-moody.com

An Employee Owned Corporation

ARCHITECT

CONSULTANT

Budlong
An MBE|SBE|DBE|LSBE Firm
Glendale|Downtown LA|Fremont|Camarillo
W W W . B U D L O N G . C O M
Job No. 23-140

REGISTERED PROFESSIONAL ENGINEER — JAMES H. CHRISTIAN — E 22864 — ELECTRICAL — STATE OF CA

Drawn by: Author

Check by: Checker

Revisions

No.	Date	Description
	05/09/24	90% CD
	08/05/24	100% CD
	11/25/24	100% CD V2
	01/31/25	100% CD V3
	12/17/24	PC CHANGES

All dimensions must be checked at the job by the contractor who accepts full responsibility for their accuracy under the contract. These plans & the specifications in connection therewith have been prepared for a specific site. Any and all responsibility for their use in whole or in part on any other site is hereby disclaimed by Flewelling & Moody.

CITY OF RIDGECREST

SGT. JOHN PINNEY MEMORIAL POOL REPLACEMENT

205 S WARNER ST, RIDGECREST, CA 93555

Drawing Title

ELECTRICAL COMMUNITY BUILDING EMERGENCY PHOTOMETRICS

Job No. 3055-0100

Sheet No. E3.03

Date 05/09/2025

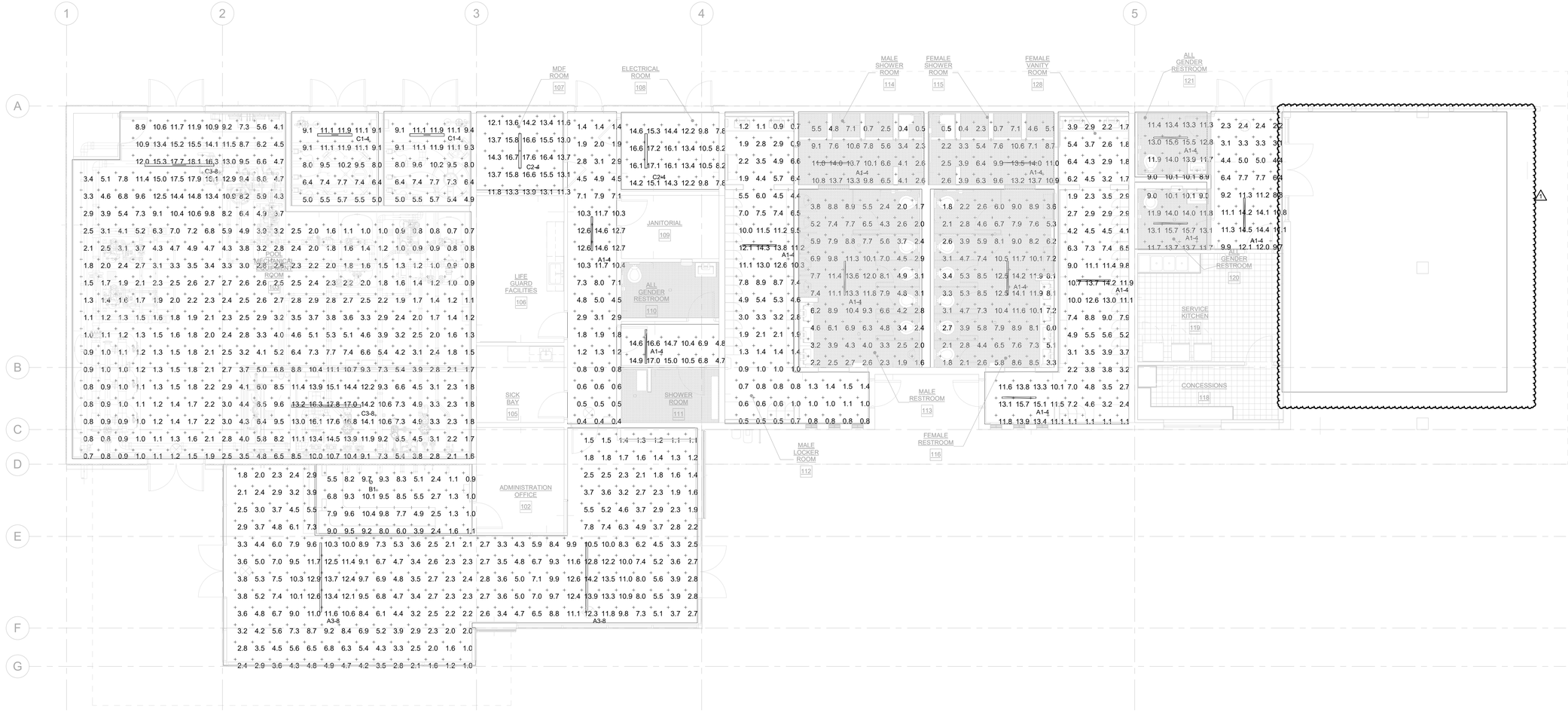

ELECTRICAL COMMUNITY BUILDING EMERGENCY PHOTOMETRICS ALT 6

SCALE: 3/16" = 1'-0"

1 E3.03A6

N

STATISTICS

DESCRIPTION	SYMBOL	AVG	MAX	MIN	MAX/MIN	AVG/MIN
ACCESSIBLE RESTRM-2	+	12.4 fc	15.7 fc	9.0 fc	1.7:1	1.4:1
ACID STORAGE	+	8.5 fc	11.9 fc	4.9 fc	2.4:1	1.7:1
CHECK IN	+	5.9 fc	10.4 fc	0.9 fc	11.6:1	6.6:1
CHLORINE STORAGE	+	8.5 fc	11.9 fc	5.0 fc	2.4:1	1.7:1
ELECT RM	+	13.0 fc	17.2 fc	7.8 fc	2.2:1	1.7:1
HALL-1	+	4.8 fc	14.6 fc	0.4 fc	36.5:1	12.0:1
HALL-2	+	8.0 fc	14.5 fc	2.2 fc	6.6:1	3.6:1
MAIN ENTRY LOBBY	+	5.3 fc	14.2 fc	1.0 fc	14.2:1	5.3:1
MDF RM	+	14.3 fc	17.6 fc	11.3 fc	1.6:1	1.3:1
MENS LOCKER RM	+	4.1 fc	14.3 fc	0.5 fc	28.6:1	8.2:1
MENS RESTRM	+	5.8 fc	13.6 fc	1.6 fc	8.5:1	3.6:1
MENS SHOWER RM	+	6.8 fc	14.0 fc	0.4 fc	35.0:1	17.0:1
POOL EQ RM	+	4.7 fc	18.1 fc	0.7 fc	25.9:1	6.7:1
UNKNOWN ROOM	+	11.4 fc	17.0 fc	4.7 fc	3.6:1	2.4:1
WOMENS LOCKER RM	+	6.4 fc	15.7 fc	1.1 fc	14.3:1	5.8:1
WOMENS RESTRM	+	6.6 fc	14.2 fc	1.8 fc	7.9:1	3.7:1
WOMENS SHOWER	+	6.7 fc	14.0 fc	0.4 fc	35.0:1	16.8:1
ACCESSIBLE RESTRM-1	+	12.2 fc	15.6 fc	8.9 fc	1.8:1	1.4:1

AGENCY

FLEWELLING & MOODY
architecture planning interiors

HEADQUARTERS OFFICE:
99 S. Lake Avenue, Suite 300
Pasadena, CA 91101
Phone: 323.543.8300
E-Mail: fm-pasadena@flewelling-moody.com

ANTELOPE VALLEY OFFICE:
1035 West Lancaster Bouldvard
Lancaster, California 93534
Phone: 661.949.0771
E-Mail: fm-lancaster@flewelling-moody.com

An Employee Owned Corporation

ARCHITECT

CONSULTANT

Budlong
An MBE|SBE|DBE|LSBE Firm
Glendale|Downtown LA|Fremont|Camarillo
WWW.BUDLONG.COM
Job No. 23-140

REGISTERED PROFESSIONAL ENGINEER MANAV K. CHRISTIAN E 22864 ELECTRICAL STATE OF CA

Drawn by: Author

Check by: Checker

Revisions

No.	Date	Description
	12/17/24	PC CHANGES
1	08/27/2025	BID ALTERNATE

All dimensions must be checked at the job by the contractor who accepts full responsibility for their accuracy under the contract. These plans & the specifications in connection therewith have been prepared for a specific site. Any and all responsibility for their use in whole or in part on any other site is hereby disclaimed by Flewelling & Moody.

CITY OF RIDGECREST

SGT. JOHN PINNEY MEMORIAL POOL REPLACEMENT

205 S WARNER ST, RIDGECREST, CA 93555

Drawing Title

ELECTRICAL COMMUNITY BUILDING EMERGENCY PHOTOMETRICS ALT 6

Job No. 3055-0000

Sheet No. **E3.03A6**

Date 08/07/2024

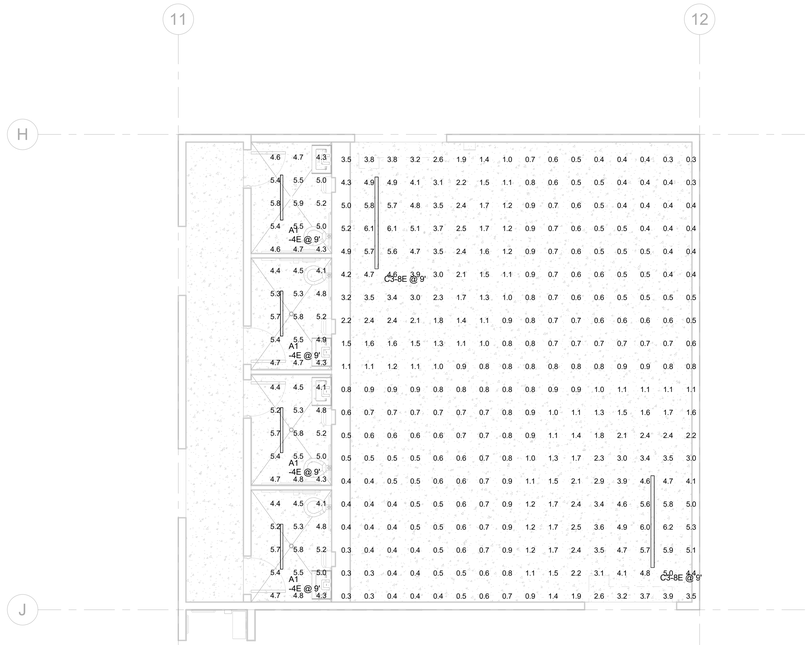

ELECTRICAL STORAGE BUILDING EMERGENCY PHOTOMETRICS

SCALE: 3/16" = 1'-0"

1
E3.04

N

STATISTICS						
DESCRIPTION	SYMBOL	AVG	MAX	MIN	MAX/MIN	AVG/MIN
RESTROOM-1	+	5.1 fc	5.9 fc	4.3 fc	1.4:1	1.2:1
RESTROOM-2	+	5.0 fc	5.8 fc	4.1 fc	1.4:1	1.2:1
RESTROOM-3	+	5.0 fc	5.8 fc	4.1 fc	1.4:1	1.2:1
RESTROOM-4	+	5.0 fc	5.8 fc	4.1 fc	1.4:1	1.2:1
POOL EQUIPMENT STORAGE-17	+	1.6 fc	6.2 fc	0.3 fc	20.7:1	5.3:1

AGENCY

REVIEWED FOR CODE COMPLIANCE BY:
WILLDAN ENGINEERING

Approval of these plans & specifications shall not be construed to be a permit for, or an approval of any violation of any Federal, State, County or City laws or ordinances. One set of approved plans must be kept on the job until completion.

10:06:48 AM Jul 21, 2025

FLEWELLING & MOODY
architecture planning interiors

HEADQUARTERS OFFICE:
99 S. Lake Avenue, Suite 300
Pasadena, CA 91101
Phone: 323.543.8300
E-Mail: fm-pasadena@flewelling-moody.com

ANTELOPE VALLEY OFFICE:
1035 West Lancaster Bouldvard
Lancaster, California 93534
Phone: 661.949.0771
E-Mail: fm-lancaster@flewelling-moody.com

An Employee Owned Corporation

ARCHITECT

CONSULTANT

Budlong
An MBE|SBE|DBE|LSBE Firm
Glendale|Downtown LA|Fremont|Camarillo
WWW.BUDLONG.COM
Job No. 23-140

REGISTERED PROFESSIONAL ENGINEER
MANAN H. CHRISTIAN
E 22864
07/30/25
ELECTRICAL
STATE OF CALIFORNIA

Drawn by: Author

Check by: Checker

Revisions

No.	Date	Description
	05/09/24	90% CD
	08/05/24	100% CD
	11/25/24	100% CD V2
	01/31/25	100% CD V3

All dimensions must be checked at the job by the contractor who accepts full responsibility for their accuracy under the contract. These plans & the specifications in connection therewith have been prepared for a specific site. Any and all responsibility for their use in whole or in part on any other site is hereby disclaimed by Flewelling & Moody.

CITY OF RIDGECREST

SGT. JOHN PINNEY MEMORIAL POOL REPLACEMENT

205 S WARNER ST, RIDGECREST, CA 93555

Drawing Title

ELECTRICAL STORAGE BUILDING EMERGENCY PHOTOMETRICS

Job No. 3055-0100

Date 05/09/2025

Sheet No. E3.04

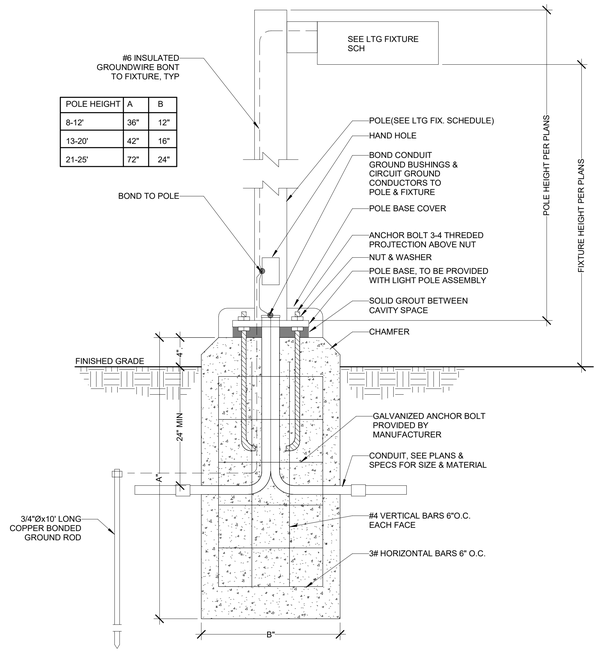

LIGHT POLE DETAIL(NON-VEHICULAR TRAFFIC AREA)

SCALE:N.T.S.

8 E6.01

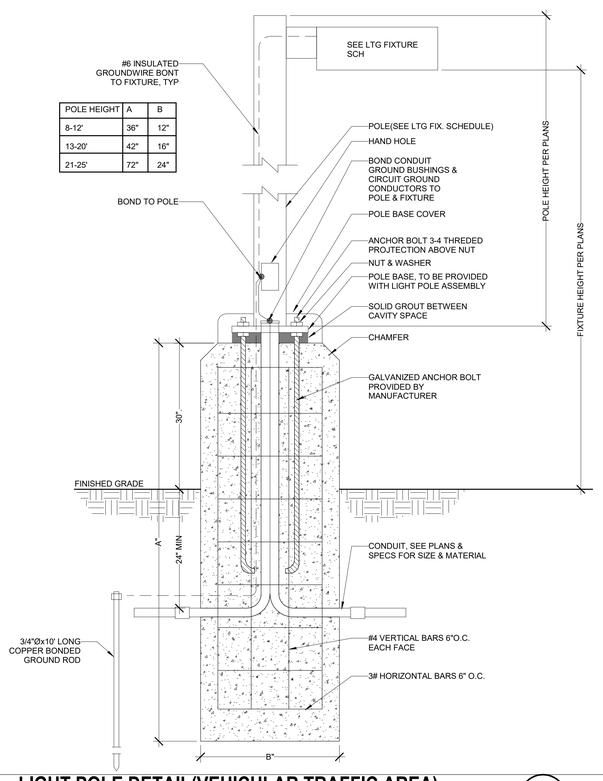

LIGHT POLE DETAIL(VEHICULAR TRAFFIC AREA)

SCALE:N.T.S.

3 E6.01

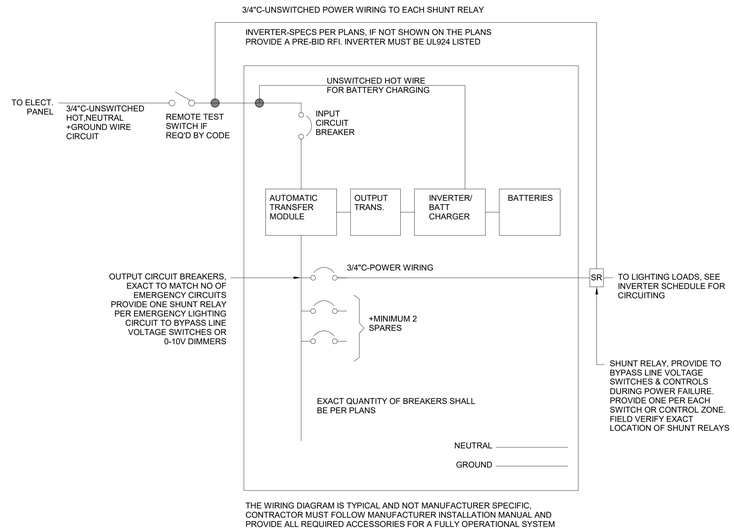

INVERTER WIRING DIAGRAM-MULTI CIRCUIT

SCALE:N.T.S.

7 E6.01

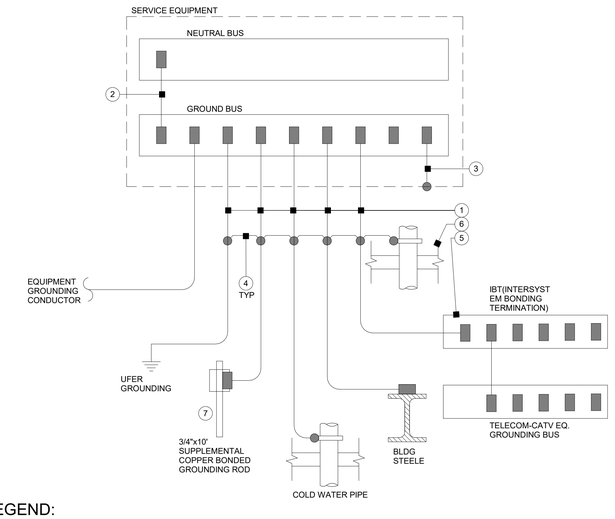

LEGEND:

- EXOTHERMIC WELD CONNECTION SUCH AS CADWELD, COMPATIBLE WITH JOINTS.
- MECHANICAL/BOLTD CONNECTION

KEYNOTES :

1. GROUNDING ELECTRODE CONDUCTOR SIZE PER PLAN
2. MAIN BONDING JUMPER SIZE PER PLAN
3. SYSTEM BONDING JUMPER SIZE PER PLAN
4. ALL GROUNDING ELECTRODES AS SHOWS THAT ARE PRESENT AT EACH BUILDING OR STRUCTURE SERVED SHALL BE BONDED TOGETHER TO FORM THE GROUNDING SYSTEM, WHERE NONE OF THESE GROUNDING ELECTRODE EXIST, ONE OR MORE OF THE GROUNDING ELECTRODES SPECIFIED IN 250.52(A)(4) THROUGH 250.52(A)(8) SHALL BE INSTALLED AND USED PER CEC250.50 SIZE PER PLAN
5. CONTRACTOR TO USE INTERSYSTEM BONDING TERMINATION DEVICE PER CEC 800.1. DEVICE MUST COMPLY WITH THE REQUIREMENTS OF CEC 250.94
6. BONDING OF METALLIC GAS OR OTHER PIPES THAT ARE LIKELY TO BE ENERGIZED, SIZE PER PLANS
7. IF MULTIPLE RODS ARE USE, THEY SHALL NOT BE LESS THAN 6FT. APART

SERVICE EQ GROUNDING

SCALE:N.T.S.

2 E6.01

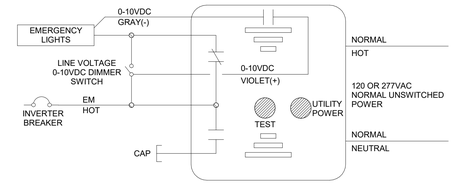

1. SHUNT RELAY FOR LINE VOLTAGE TOGGLE ON/OFF AND LINE VOLTAGE DIMMER SWITCH AND OTHER LINE VOLTAGE CONTROLS. USE MYERS RRU-X-UNV OR APPROVED EQUAL. SHUNT RELAY MUST BE UL924 APPROVED
2. PROVIDE ONE SHUNT RELAY PER SWITCH LEG, USE SHUNT RELAY WHEN LINE VOLTAGE CONTROLS NEEDS BYPASS. WHEN LOW VOLTAGE DIGITAL LIGHTING CONTROLS ARE USED , CONTRACTOR MUST PROVIDE EMERGENCY POWER PACKS FOR CONTROL BYPASS AND MUST BE INCLUDED AS PART OF THE CONTROL SYSTEM
3. CAP UNUSED WIRES
4. THE WIRING DIAGRAM IS TYPICAL AND NOT MANUFACTURER SPECIFIC, CONTRACTOR MUST FOLLOW MANUFACTURER INSTALLATION MANUAL AND PROVIDE ALL REQUIRED ACCESSORIES FOR A FULLY OPERATIONAL SYSTEM

SHUNT RELAY WIRING

SCALE:N.T.S.

6 E6.01

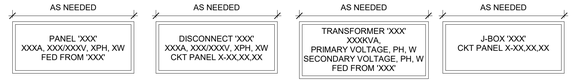

SPECS:
LABELS : LAMACOID ENGRAVED
PLATE : PLASTIC PLATE W/ADHESIVE BACK & HOLES IN ALL CORNERS
WEATHERPROOF FOR EXTERIOR, ALUMINUM FOR ALL HAZADOUS AREAS
BACKGROUND : BLACK/BLUE BACKGROUND
FONTS : 3/8"(27pt) MIN., AERIAL, WHITE, CENTERED

NOTES:
1. CONTRACTOR TO USE AMP, VOLT, PHASE, WIRE, KVA, EQ., LABEL NAME AS NOTED PER PLANS FOR TAGS
2. LABELS FOR UTILITY COMPANY EQ. SHALL BE PER UTILITY COMPANY REQUIREMENTS

ELECTRICAL EQ. LABELS

SCALE:N.T.S.

5 E6.01

NOT USED

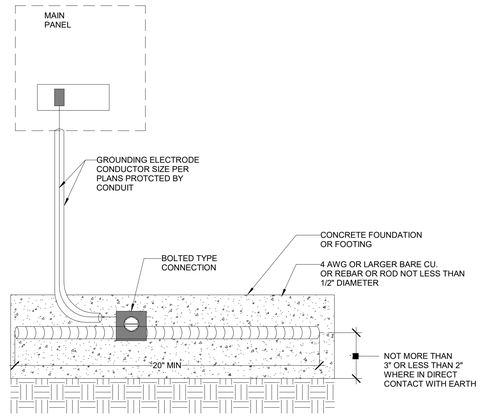

UFER GROUNDING

SCALE:N.T.S.

1 E6.01

AGENCY

REVIEWED FOR CODE COMPLIANCE BY: WILLDAN ENGINEERING

Approval of these plans & specifications shall not be construed to be a permit for, or an approval of any violation of any Federal, State, County or City laws or ordinances. One set of approved plans must be kept on the job until completion.

10:06:49 AM Jul 21, 2025

FLEWELLING & MOODY
architecture planning interiors

HEADQUARTERS OFFICE:
99 S. Lake Avenue, Suite 300
Pasadena, CA 91101
Phone: 323.543.8300
E-Mail: fm-pasadena@flewelling-moody.com

ANTELOPE VALLEY OFFICE:
1035 West Lancaster Boulevard
Lancaster, California 93534
Phone: 661.949.0771
E-Mail: fm-lancaster@flewelling-moody.com

An Employee Owned Corporation

ARCHITECT

CONSULTANT

Budlong
An MBE|SBE|DBE|LSBE Firm
Glendale|Downtown LA|Fremont|Camarillo
W W W . B U D L O N G . C O M
Job No. 23-140

REGISTERED PROFESSIONAL ENGINEER DANIEL H. CHRISTIAN CIVIL E 22864 3/20/25 STATE OF CA

Drawn by: Author
Check by: Checker
Revisions

No.	Date	Description
	01/26/24	100% DD
	03/01/24	50% CD
	05/09/24	90% CD
	08/05/24	100% CD
	11/25/24	100% CD V2
	01/31/25	100% CD V3

All dimensions must be checked at the job by the contractor who accepts full responsibility for their accuracy under the contract. These plans & the specifications in connection therewith have been prepared for a specific site. Any and all responsibility for their use in whole or in part on any other site is hereby disclaimed by Flewelling & Moody.

CITY OF RIDGECREST

SGT. JOHN PINNEY MEMORIAL POOL REPLACEMENT

205 S WARNER ST, RIDGECREST, CA 93555

Drawing Title

ELECTRICAL DETAILS-1

Job No. 3055-0100
Sheet No. **E6.01**
Date 05/09/2025

Kit and that the motor is powered.

Wiring

All wiring should be in accordance with local ordinances and the National Electrical Code, NFPA 70. Ensure the power supply (voltage, frequency, and current carrying capacity of wires) is in accordance with the motor nameplate.

⚠ **Follow the proper wiring diagram provided with the Air Balance Kit and Remote Control Accessory (if applicable).**

⚠WARNING

Voltage Warning:

Low-voltage control wires and line voltage power wires must not be installed in same conduit. Failure to follow these instructions could result in malfunction or damage.

Disconnect Warning:

ALWAYS disconnect power prior to working on fan. Failure to comply with these safety precautions could result in property damage, serious injury, or death.

Wiring Diagram

Notes

1. For remote on/off control remove jumper and wire to SPDT switch or relay
2. Schematic is intended to show interconnection of devices provided by Cook
3. All other devices, wiring, installation and control schemes are the responsibility of others
4. For more information, refer to IOMs and Vari-Flow controls application guide.
5. For detailed wiring see EC motor or Motor controller specific submittals, supplements, and IOMs.
6. Three phase motor controllers will require separate power source.
7. 24V has a combined 0.5A Max output
8. Aux Contact relay rated for 10A @ 24 - 250VAC, 10A @ 30VDC

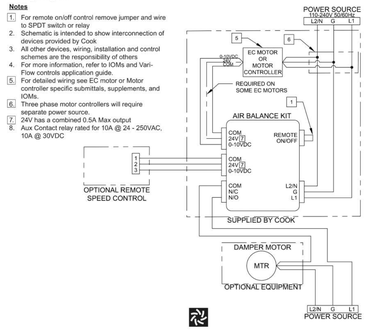

LOREN COOK COMPANY

Corporate Offices: 2015 E. Dale St. Springfield, MO 65803
Phone 417-869-6474 | Fax 417-862-3820 | lorencook.com

\\FTA\BK IOMI\

September 2018

2

THERMOSTAT & EF-11 INTERLOCK WIRING DIAGRAM

SCALE:N.T.S.

3 E6.02

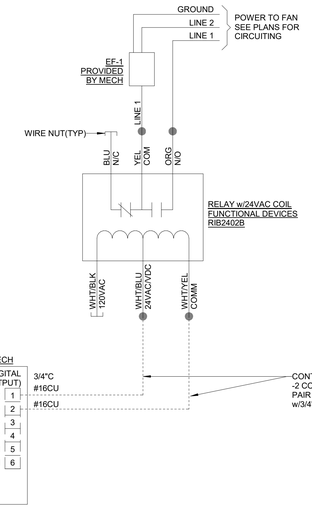

DOAS & EF-1 INTERLOCK WIRING DIAGRAM

SCALE:N.T.S.

2 E6.02

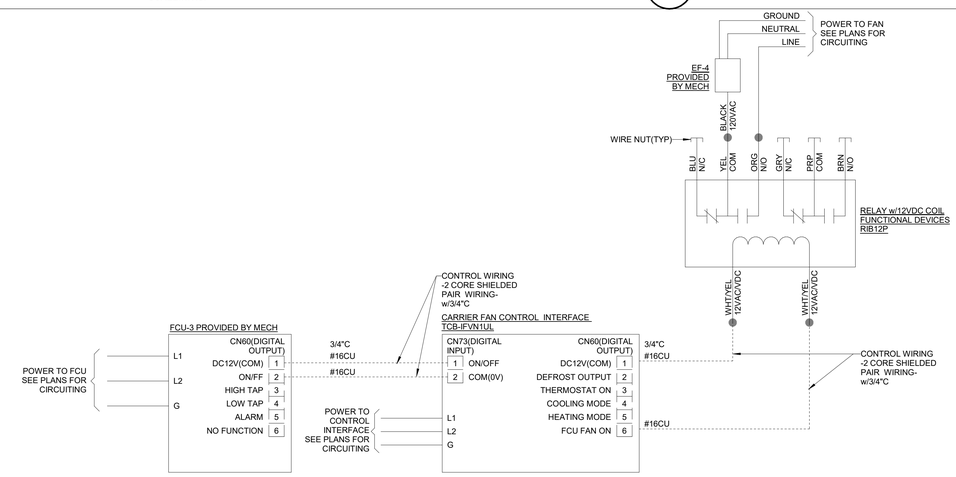

FCU-3 & EF-4 INTERLOCK WIRING DIAGRAM

SCALE:N.T.S.

1 E6.02

AGENCY

REVIEWED FOR CODE COMPLIANCE BY: WILLDAN ENGINEERING

Approval of these plans & specifications shall not be construed to be a permit for, or an approval of any violation of any Federal, State, County or City laws or ordinances. One set of approved plans must be kept on the job until completion.

10:06:51 AM Jul 21, 2025

FLEWELLING & MOODY
architecture planning interiors

HEADQUARTERS OFFICE:
99 S. Lake Avenue, Suite 300
Pasadena, CA 91101
Phone: 323.543.8300
E-Mail: fm-pasadena@flewelling-moody.com

ANTELOPE VALLEY OFFICE:
1035 West Lancaster Boulevard
Lancaster, California 93534
Phone: 661.949.0771
E-Mail: fm-lancaster@flewelling-moody.com

An Employee Owned Corporation

ARCHITECT

CONSULTANT

Budlong
An MBE|SBE|DBE|LSBE Firm
Glendale|Downtown LA|Fremont|Camarillo
W W W . B U D L O N G . C O M
Job No. 23-140

REGISTERED PROFESSIONAL ENGINEER MARK H. CHRISTIAN CE 23864 07/31/25 REGISTERED ENGINEER STATE OF CA

Drawn by: Author

Check by: Checker

Revisions

No.	Date	Description
	05/09/24	90% CD
	08/05/24	100% CD
	11/25/24	100% CD V2
	01/31/25	100% CD V3

All dimensions must be checked at the job by the contractor who accepts full responsibility for their accuracy under the contract. These plans & the specifications in connection therewith have been prepared for a specific site. Any and all responsibility for their use in whole or in part on any other site is hereby disclaimed by Flewelling & Moody.

CITY OF RIDGECREST

SGT. JOHN PINNEY MEMORIAL POOL REPLACEMENT

205 S WARNER ST, RIDGECREST, CA 93555

Drawing Title

ELECTRICAL DETAILS-2

Job No. 3055-0100

Sheet No. **E6.02**

Date 05/09/2025

STATE OF CALIFORNIA
Indoor Lighting CALIFORNIA ENERGY COMMISSION

CERTIFICATE OF COMPLIANCE		NRCC-LTI-E
Project Name: SGT. JOHN PINNEY MEMORIAL POOL REPLACEMENT	Report Page:	(Page 1 of 13)
Project Address: 205 S WARNER ST	Date Prepared:	01-05-2024

A. GENERAL INFORMATION

01	Project Location (city)	RIDGECREST	04 Total Conditioned Floor Area (ft²)	4,513
02	Climate Zone	14	05 Total Unconditioned Floor Area (ft²)	2,400
03	Occupancy Types Within Project (select all that apply):		06 # of Stories (Habitable Above Grade)	1

● Office ● Support Areas ● Warehouse ● All Other Occupancies

B. PROJECT SCOPE

This table includes any lighting systems that are within the scope of the permit application and are demonstrating compliance using the prescriptive path outlined in 140.6 / 170.2(e) or 141.0(b)2 / 180.2(b)4 for alterations.

Scope of Work	Conditioned Spaces		Unconditioned Spaces	
01	02	03	04	05
My Project Consists of (check all that apply):	Calculation Method	Area (ft²)	Calculation Method	Area (ft²)
☒ New Lighting System	Area Category Method	4513	Area Category Method	2400
☐ New Lighting System - Parking Garage				
Total Area of Work (ft²)	4513		2400	

STATE OF CALIFORNIA
Indoor Lighting CALIFORNIA ENERGY COMMISSION

CERTIFICATE OF COMPLIANCE		NRCC-LTI-E
Project Name: SGT. JOHN PINNEY MEMORIAL POOL REPLACEMENT	Report Page:	(Page 2 of 13)
	Date Prepared:	01-05-2024

C. COMPLIANCE RESULTS

If any cell on this table says "DOES NOT COMPLY" or "COMPLIES with Exceptional Conditions" refer to Table D. for guidance.

	Allowed Lighting Power per 140.6(b) / 170.2(e) (Watts)						Adjusted Lighting Power per 140.6(a) / 170.2(e) (Watts)					Compliance Results
Lighting in conditioned and unconditioned spaces must not be combined for compliance per 140.6(b)1 / 170.2(e)	01 Complete Building 140.6(c)1 (See Table I)	02 Area Category 140.6(c)2 / 170.2(e)4A (See Table I)	03 Area Category Additional 140.6(c)2G / 170.2(e)4Av (+) (See Table I)	04 Tailored 140.6(c)3 / 170.2(e)4B (+) (See Table K)	05 Total Allowed (Watts)		06 Total Designed (Watts) (See Table F)	07 Adjustments PAF Lighting Control Credits 140.6(a)2 / 170.2(e)1B (-) (See Table P)		08 Total Adjusted (Watts) *Includes Adjustments		09 05 must be >= 08 140.6 / 170.2(e)
Conditioned		2,920.8	282		= 3,203	≥	2,945	0	=	2945		COMPLIES
Unconditioned		1,028.8	0		= 1,029	≥	992	0	=	992		COMPLIES
							Controls Compliance (See Table H for Details)					COMPLIES
							Rated Power Reduction Compliance (See Table Q for Details)					

D. EXCEPTIONAL CONDITIONS

This table is auto-filled with uneditable comments because of selections made or data entered in tables throughout the form.

E. ADDITIONAL REMARKS

This table includes remarks made by the permit applicant to the Authority Having Jurisdiction.

Generated Date/Time: Documentation Software: EnergyPro
CA Building Energy Efficiency Standards - 2022 Nonresidential Compliance Report Version: 2022.0.000 Schema Version: rev 20220101 Compliance ID: EnergyPro-5468-0524-1270 Report Generated: 2024-05-01 04:41:46

STATE OF CALIFORNIA
Indoor Lighting CALIFORNIA ENERGY COMMISSION

CERTIFICATE OF COMPLIANCE		NRCC-LTI-E
Project Name: SGT. JOHN PINNEY MEMORIAL POOL REPLACEMENT	Report Page:	(Page 3 of 13)
	Date Prepared:	01-05-2024

F. INDOOR LIGHTING FIXTURE SCHEDULE

This table includes all planned permanent and portable lighting other than dwelling unit/ hotel/ motel room lighting. Multifamily dwelling unit and hotel/motel room lighting is documented in Table T. If using Table T to document lighting in multifamily common use areas providing shared provisions for living, eating, cooking or sanitation, those luminaires are not included here.

Designed Wattage: Conditioned Spaces

01	02	03	04	05	06	07	08	09	10	
Name or Item Tag	Complete Luminaire Description	Modular (Track) Fixture	Small Aperture & Color Change[1]	Watts per luminaire[2]	How is Wattage determined	Total Number of Luminaires	Excluded per 140.6(a)3 / 170.2(e)2C	Design Watts	Field Inspector Pass	Field Inspector Fail
A1-4	A1-4 - 4ft Recessed Linear	No	NA	24	Mfr. Spec	35	No	840	☐	☐
A1-8	A1-8 - 8ft Recessed Linear	No	NA	48	Mfr. Spec	5	No	240	☐	☐
A2-4	A2 - 4ft Recessed Linear	No	NA	32	Mfr. Spec	9	No	288	☐	☐
A3-8	A3-8 - Linear Pendant	No	NA	38	Mfr. Spec	10	No	380	☐	☐
B1	B1- 6" Recessed downlight	No	NA	8.8	Mfr. Spec	27	No	237.6	☐	☐
B2	B2 - 2" Adjustable recessed downlight	No	NA	9	Mfr. Spec	8	No	72	☐	☐
C2-4	C2-4 - Surface Slip Light	No	NA	32	Mfr. Spec	3	No	96	☐	☐
E	E - Circular Pendant	No	NA	45	Mfr. Spec	6	No	270	☐	☐
G1-4	G1-4 - Recessed Slot Linear(Downlights)	No	NA	24	Mfr. Spec	8	No	192	☐	☐
G1-8	G1-8 - Recessed Slot Linear(Downlights)	No	NA	47	Mfr. Spec	7	No	329	☐	☐
							Total Designed Watts: CONDITIONED SPACES	2,945		

Designed Wattage: Unconditioned Spaces

01	02	03	04	05	06	07	08	09	10	
Name or Item Tag	Complete Luminaire Description	Modular (Track) Fixture	Small Aperture & Color Change[1]	Watts per luminaire[2]	How is Wattage determined	Total Number of Luminaires	Excluded per 140.6(a)3 / 170.2(e)2C	Design Watts	Field Inspector Pass	Field Inspector Fail
A1-4	A1-4 - 4ft Recessed Linear	No	NA	24	Mfr. Spec	9	No	216	☐	☐
B1	B1- 6" Recessed downlight	No	NA	8.8	Mfr. Spec	7	No	61.6	☐	☐

Generated Date/Time: Documentation Software: EnergyPro
CA Building Energy Efficiency Standards - 2022 Nonresidential Compliance Report Version: 2022.0.000 Schema Version: rev 20220101 Compliance ID: EnergyPro-5468-0524-1270 Report Generated: 2024-05-01 04:41:46

STATE OF CALIFORNIA
Indoor Lighting CALIFORNIA ENERGY COMMISSION

CERTIFICATE OF COMPLIANCE		NRCC-LTI-E
Project Name: SGT. JOHN PINNEY MEMORIAL POOL REPLACEMENT	Report Page:	(Page 4 of 13)
	Date Prepared:	01-05-2024

F. INDOOR LIGHTING FIXTURE SCHEDULE

C1-4	C1-4 - 4ft Pendant Slip Light	No	NA	26	Mfr. Spec	12	No	312	☐	☐
C2-4	C2-4 - Surface Slip Light	No	NA	32	Mfr. Spec	1	No	32	☐	☐
C3-8	C3-8 - 8ft Pendant Slip Light	No	NA	37	Mfr. Spec	10	No	370	☐	☐
							Total Designed Watts: UNCONDITIONED SPACES	992		

[1]*FOOTNOTE: Design Watts for small aperture and color changing luminaires which qualify per 140.6(a)4B / 170.2(e)2D is adjusted to be 75%./80% of their rated wattage. Table F automatically makes this adjustment, the permit applicant should enter full rated wattage in column 05.*

[2]*Authority Having Jurisdiction may ask for luminaire cut sheets to confirm wattage used for compliance per 130.0(c) / 160.5(b). Wattage used must be the maximum rated for the luminaire, not the lamp.*

G. MODULAR LIGHTING SYSTEMS

This section does not apply to this project.

H. INDOOR LIGHTING CONTROLS (Not including PAFs)

This table includes lighting controls for conditioned and unconditioned spaces.

Building Level Controls

01	02	03	
		Field Inspector	
Mandatory Demand Response 110.12(c)	Shut-off controls 130.1(c) / 160.5(b)4C	Pass	Fail
Required >= 4,000W subject to multilevel	See Area/Space Level Controls	☐	☐

Generated Date/Time: Documentation Software: EnergyPro
CA Building Energy Efficiency Standards - 2022 Nonresidential Compliance Report Version: 2022.0.000 Schema Version: rev 20220101 Compliance ID: EnergyPro-5468-0524-1270 Report Generated: 2024-05-01 04:41:46

STATE OF CALIFORNIA
Indoor Lighting CALIFORNIA ENERGY COMMISSION

CERTIFICATE OF COMPLIANCE		NRCC-LTI-E
Project Name: SGT. JOHN PINNEY MEMORIAL POOL REPLACEMENT	Report Page:	(Page 5 of 13)
	Date Prepared:	01-05-2024

H. INDOOR LIGHTING CONTROLS (Not including PAFs)

Area Level Controls

04	05	06	07	08	09	10	11	12	
Area Description	Complete Building or Area Category Primary Function Area	Manual Area Controls 130.1(a) / 160.5(b)4A	Multi-Level Controls 130.1(b) / 160.5(b)4B	Shut-Off Controls 130.1(c) // 160.5(b)4C	Primary/Sky lit Daylighting 130.1(d) / 160.5(b)4D	Secondary Daylighting 130.1(d) / 160.5(b)4D	Interlocked Systems 140.6(a)1/ 170.2(e)2A	Field Inspector Pass	Field Inspector Fail
Main Entry Lobby	Main Entry Lobby	Readily Accessible	Dimmer	Occupancy Sensor	Included	Included	No	☐	☐
Check In-Reception	Main Entry Lobby	Readily Accessible	Dimmer	Occupancy Sensor	Included	Included	No	☐	☐
Administration Office	Office (>250 square feet)	Readily Accessible	Dimmer	Occupancy Sensor	NA: General Ltg < 120W	NA: General Ltg < 120W	No	☐	☐
Sick Bay	All Other Space Types	Readily Accessible	Dimmer	Occupancy Sensor	NA: General Ltg < 120W	NA: General Ltg < 120W	No	☐	☐
Life Guard Facilities	Office (<=250 square feet)	Readily Accessible	Dimmer	Partial On 130.1(c)/ 160.5(b)4C	NA: General Ltg < 120W	NA: General Ltg < 120W	No	☐	☐
MDF	Electrical Mechancial Telephone Room	Readily Accessible	NA: General Ltg <= 0.5W/Sf	NA: Elec. equip. rm	NA: General Ltg < 120W	NA: General Ltg < 120W	No	☐	☐
Corridor-1	Corridor	Readily Accessible	NA: General Ltg <= 0.5W/Sf	Occupancy Sensor	NA: General Ltg < 120W	NA: General Ltg < 120W	No	☐	☐
Elect Rm	Electrical Mechancial Telephone Room	Readily Accessible	Dimmer	NA: Elec. equip. rm	NA: General Ltg < 120W	NA: General Ltg < 120W	No	☐	☐
Janitor	All Other Space Types	Readily Accessible	NA: General Ltg <= 0.5W/Sf	Occupancy Sensor	NA: General Ltg < 120W	NA: General Ltg < 120W	No	☐	☐
Employee Restrm	Restroom	Readily Accessible	NA: Restrooms	Occupancy Sensor	NA: General Ltg < 120W	NA: General Ltg < 120W	No	☐	☐
Storage	Commercial Industrial Storage Shipping	Readily Accessible	Dimmer	Occupancy Sensor	NA: General Ltg < 120W	NA: General Ltg < 120W	No	☐	☐

Generated Date/Time: Documentation Software: EnergyPro
CA Building Energy Efficiency Standards - 2022 Nonresidential Compliance Report Version: 2022.0.000 Schema Version: rev 20220101 Compliance ID: EnergyPro-5468-0524-1270 Report Generated: 2024-05-01 04:41:46

STATE OF CALIFORNIA
Indoor Lighting CALIFORNIA ENERGY COMMISSION

CERTIFICATE OF COMPLIANCE		NRCC-LTI-E
Project Name: SGT. JOHN PINNEY MEMORIAL POOL REPLACEMENT	Report Page:	(Page 6 of 13)
	Date Prepared:	01-05-2024

H. INDOOR LIGHTING CONTROLS (Not including PAFs)

Employee Shower	Restroom	Readily Accessible	NA: Restrooms	Occupancy Sensor	NA: General Ltg < 120W	NA: General Ltg < 120W	No	☐	☐
Mens Shower	Restroom	Readily Accessible		Occupancy Sensor	NA: General Ltg < 120W	NA: General Ltg < 120W	No	☐	☐
Mens Locker	Locker/Dressing Room	Readily Accessible	Dimmer	Occupancy Sensor	NA: General Ltg < 120W	NA: General Ltg < 120W	No	☐	☐
Mens Restroom	Restroom	Readily Accessible	NA: Restrooms	Occupancy Sensor	NA: General Ltg < 120W	NA: General Ltg < 120W	No	☐	☐
Womens Shower	Restroom	Readily Accessible	NA: Restrooms	Occupancy Sensor	NA: General Ltg < 120W	NA: General Ltg < 120W	No	☐	☐
Womens Locker	Locker/Dressing Room	Readily Accessible	Dimmer	Occupancy Sensor	NA: General Ltg < 120W	NA: General Ltg < 120W	No	☐	☐
Womens Restroom	Restroom	Readily Accessible	NA: Restrooms	Occupancy Sensor	NA: General Ltg < 120W	NA: General Ltg < 120W	No	☐	☐
Accesible Restroom - 120	Restroom	Readily Accessible	NA: Restrooms	Occupancy Sensor	NA: General Ltg < 120W	NA: General Ltg < 120W	No	☐	☐
Accesible Restroom - 121	Restroom	Readily Accessible	NA: Restrooms	Occupancy Sensor	NA: General Ltg < 120W	NA: General Ltg < 120W	No	☐	☐
Corridor-2	Corridor	Readily Accessible		Occupancy Sensor	NA: General Ltg <= 0.5W/Sf	NA: General Ltg < 120W	No	☐	☐
Service Kitchen	Kitchen/ Food Preparation	Readily Accessible	Dimmer	Occupancy Sensor	NA: General Ltg < 120W	NA: General Ltg < 120W	No	☐	☐
Concessions	All Other Space Types	Readily Accessible	Dimmer	Occupancy Sensor	NA: General Ltg < 120W	NA: General Ltg < 120W	No	☐	☐
Community Room	Convention, Conference, Multipurpose and Meeting Center	Readily Accessible	Dimmer	Partial On 130.1(c)/ 160.5(b)4C	Included	Included	No	☐	☐
Community Closet-1	All Other Space Types	Readily Accessible	NA: General Ltg <= 0.5W/Sf	Countdown Timer	NA: General Ltg < 120W	NA: General Ltg < 120W	No	☐	☐
Community Closet-2	All Other Space Types	Readily Accessible	NA: General Ltg <= 0.5W/Sf	Countdown Timer	NA: General Ltg < 120W	NA: General Ltg < 120W	No	☐	☐

Generated Date/Time: Documentation Software: EnergyPro
CA Building Energy Efficiency Standards - 2022 Nonresidential Compliance Report Version: 2022.0.000 Schema Version: rev 20220101 Compliance ID: EnergyPro-5468-0524-1270 Report Generated: 2024-05-01 04:41:46

STATE OF CALIFORNIA
Indoor Lighting CALIFORNIA ENERGY COMMISSION

CERTIFICATE OF COMPLIANCE		NRCC-LTI-E
Project Name: SGT. JOHN PINNEY MEMORIAL POOL REPLACEMENT	Report Page:	(Page 7 of 13)
	Date Prepared:	01-05-2024

H. INDOOR LIGHTING CONTROLS (Not including PAFs)

Pool Mechanical equipment rm	Electrical Mechancial Telephone Room	Readily Accessible	NA: General Ltg <= 0.5W/Sf	Occupancy Sensor	NA: General Ltg < 120W	NA: General Ltg < 120W	No	☐	☐
Pool mech equipment storage-1	All Other Space Types	Readily Accessible	NA: General Ltg <= 0.5W/Sf	Occupancy Sensor	NA: General Ltg < 120W	NA: General Ltg < 120W	No	☐	☐
Pool mech equipment storage-2	All Other Space Types	Readily Accessible	NA: General Ltg <= 0.5W/Sf	Occupancy Sensor	NA: General Ltg < 120W	NA: General Ltg < 120W	No	☐	☐
Fire Sprinkler Riser Room	Electrical Mechancial Telephone Room	Readily Accessible	Dimmer	Occupancy Sensor	NA: General Ltg < 120W	NA: General Ltg < 120W	No	☐	☐
							13		
							Plan Sheet Showing Davlit Zones:		
							E2.03		

I. LIGHTING POWER ALLOWANCE: COMPLETE BUILDING OR AREA CATEGORY METHODS

Each area complying using the Complete Building or Area Category Methods per 140.6(b) are included in this table. Column 06 indicates if additional lighting power allowances per 140.6(c) or adjustments per 140.6(a) are being used .

Conditioned Spaces

01	02	03	04	05	06	
Area Description	Complete Building or Area Category Primary Function Area	Allowed Density (W/ft²)	Area (ft²)	Allowed Wattage (Watts)	Additional Allowance / Adjustment Area Category	Additional Allowance / Adjustment PAF
FCU-1 Front Desk	Main Entry Lobby	0.7	1,129.7	790.8	Yes	No
FCU-2 Admin Office # 2	Office (<=250 square feet)	0.65	118.3	76.9	No	No
FCU-3 Sick Bay # 3	All Other Space Types	0.4	90	36	No	No
FCU-4 Life Guard Facilities # 4	Office (<=250 square feet)	0.65	170	110.5	No	No
FCU-4 Corridor	Corridor	0.4	205.2	82.1	No	No
FCU-5 & FCU-6 Community Room # 20	Convention, Conference, Multipurpose and Meeting Center	0.75	841	630.8	No	No
Service Kitchen # 18/Concession	Kitchen/ Food Preparation	0.95	316.2	300.4	No	No
MDF # 5	Electrical Mechancial Telephone Room	0.4	90	36	No	No

Generated Date/Time: Documentation Software: EnergyPro
CA Building Energy Efficiency Standards - 2022 Nonresidential Compliance Report Version: 2022.0.000 Schema Version: rev 20220101 Compliance ID: EnergyPro-5468-0524-1270 Report Generated: 2024-05-01 04:41:46

STATE OF CALIFORNIA
Indoor Lighting CALIFORNIA ENERGY COMMISSION

CERTIFICATE OF COMPLIANCE		NRCC-LTI-E
Project Name: SGT. JOHN PINNEY MEMORIAL POOL REPLACEMENT	Report Page:	(Page 8 of 13)
	Date Prepared:	01-05-2024

i. LIGHTING POWER ALLOWANCE: COMPLETE BUILDING OR AREA CATEGORY METHODS

Women's/Men's Locker Rooms	Locker/Dressing Room	0.45	630.8	283.8	No	No
Women's/Men's Shower Room	Restroom	0.65	229.6	149.2	No	No
Women's/Men's Rest Room	Restroom	0.65	590	383.5	No	No
FCU-9/HP-3 Electrical Room #108	Electrical Mechancial Telephone Room	0.4	102	40.8	No	No
		TOTALS:	4,512.8	2,920.8	See Tables J, or P for detail	

Unconditioned Spaces

01	02	03	04	05	06	
Area Description	Complete Building or Area Category Primary Function Area	Allowed Density (W/ft²)	Area (ft²)	Allowed Wattage (Watts)	Additional Allowance / Adjustment Area Category	Additional Allowance / Adjustment PAF
POOL MECHANICAL EQUIPMENT	Electrical Mechancial Telephone Room	0.4	1,570	628	No	No
POOL EQ. STORAGE ZONES	Commercial Industrial Warehouse	0.4	220	88	No	No
JANITOR	Commercial Industrial Warehouse	0.4	85	34	No	No
Fire Sprinkler Riser Room	Electrical Mechancial Telephone Room	0.4	25	10	No	No
EMPLOYEE SHOWER ROOM	Restroom	0.65	70	45.5	No	No
STORAGE ROOM	Commercial Industrial Warehouse	0.4	100.3	40.1	No	No
Restrooms	Restroom	0.65	205	133.2	No	No
Corridor-2	Corridor	0.4	125	50	No	No
		TOTALS:	2,400.3	1,028.8	See Tables J, or P for detail	

Generated Date/Time: Documentation Software: EnergyPro
CA Building Energy Efficiency Standards - 2022 Nonresidential Compliance Report Version: 2022.0.000 Schema Version: rev 20220101 Compliance ID: EnergyPro-5468-0524-1270 Report Generated: 2024-05-01 04:41:46

STATE OF CALIFORNIA
Indoor Lighting CALIFORNIA ENERGY COMMISSION

CERTIFICATE OF COMPLIANCE		NRCC-LTI-E
Project Name: SGT. JOHN PINNEY MEMORIAL POOL REPLACEMENT	Report Page:	(Page 9 of 13)
	Date Prepared:	01-05-2024

J. ADDITIONAL ALLOWANCE: AREA CATEGORY METHOD QUALIFYING LIGHTING SYSTEM

All areas indicated in Table I as using an additional allowance using the Area Category Method have been included in this table to calculate the additional allowance per Table 140.6-C /170.2-M

Conditioned Spaces

01	02	03	04	05	06	07	08	09	10
Area Description	Primary Function Area	Applicable Qualifying Lighting System from Table 140.6-C	Allowed Density (W/ft² or W/ft or W/unit)	Ltg Area, Length or ATM/Mirror (ft², lf or #)	Extra Allowance (Watts)	Luminaire Name or Item Tag	Watts per Luminaire	Number of Luminaires	Total Design Watts
FCU-1 Front Desk	Main Entry Lobby	DecorativeDisplay A	0.25	1129.7	282.4	A3-8	38	5	190
						E	45	3	135
						A3-8	38	5	190
						E	45	3	135
Total Design Watts	Calculated Allowance (Watts)	Total Additional Allowance for this area:							
650	282.4	282.4							
11									
Total Additional Allowance (Watts) CONDITIONED SPACES		282							

K. TAILORED METHOD GENERAL LIGHTING POWER ALLOWANCE

This section does not apply to this project.

L. ADDITIONAL LIGHTING ALLOWANCE: TAILORED WALL DISPLAY

This section does not apply to this project.

Generated Date/Time: Documentation Software: EnergyPro
CA Building Energy Efficiency Standards - 2022 Nonresidential Compliance Report Version: 2022.0.000 Schema Version: rev 20220101 Compliance ID: EnergyPro-5468-0524-1270 Report Generated: 2024-05-01 04:41:46

STATE OF CALIFORNIA
Indoor Lighting CALIFORNIA ENERGY COMMISSION

CERTIFICATE OF COMPLIANCE		NRCC-LTI-E
Project Name: SGT. JOHN PINNEY MEMORIAL POOL REPLACEMENT	Report Page:	(Page 10 of 13)
	Date Prepared:	01-05-2024

M. ADDITIONAL LIGHTING ALLOWANCE: TAILORED FLOOR AND TASK LIGHTING

This section does not apply to this project.

N. ADDITIONAL LIGHTING ALLOWANCE: TAILORED DECORATIVE /SPECIAL EFFECTS

This section does not apply to this project.

O. ADDITIONAL LIGHTING ALLOWANCE: TAILORED VERY VALUABLE MERCHANDISE

This section does not apply to this project.

P. POWER ADJUSTMENT: LIGHTING CONTROL CREDIT (POWER ADJUSTMENT FACTOR (PAF))

This section does not apply to this project.

Q. RATED POWER REDUCTION COMPLIANCE FOR ONE-FOR-ONE ALTERATIONS

This section does not apply to this project.

R. 80% LIGHTING POWER FOR ALL ALTERATIONS - CONTROLS EXCEPTIONS

This section does not apply to this project.

S. DAYLIGHT DESIGN POWER ADJUSTMENT FACTOR (PAF)

This section does not apply to this project.

T. DWELLING UNIT LIGHTING

This section does not apply to this project.

Generated Date/Time: Documentation Software: EnergyPro
CA Building Energy Efficiency Standards - 2022 Nonresidential Compliance Report Version: 2022.0.000 Schema Version: rev 20220101 Compliance ID: EnergyPro-5468-0524-1270 Report Generated: 2024-05-01 04:41:46

STATE OF CALIFORNIA
Indoor Lighting CALIFORNIA ENERGY COMMISSION

CERTIFICATE OF COMPLIANCE		NRCC-LTI-E
Project Name: SGT. JOHN PINNEY MEMORIAL POOL REPLACEMENT	Report Page:	(Page 11 of 13)
	Date Prepared:	01-05-2024

U. DECLARATION OF REQUIRED CERTIFICATES OF INSTALLATION

Selections have been made based on information provided in this document. If any selections have been changed by permit applicant, an explanation should be included in Table E. Additional Remarks. These documents must be provided to the building inspector during construction and any with "-A" in the form name must be completed through an Acceptance Test Technician Certification Provider (ATTCP). For more information visit: http://www.energy.ca.gov/title24/attcp/providers.html

Form/Title
NRCI-LTI-E - Must be submitted for all buildings

Generated Date/Time: Documentation Software: EnergyPro
CA Building Energy Efficiency Standards - 2022 Nonresidential Compliance Report Version: 2022.0.000 Schema Version: rev 20220101 Compliance ID: EnergyPro-5468-0524-1270 Report Generated: 2024-05-01 04:41:46

STATE OF CALIFORNIA
Indoor Lighting CALIFORNIA ENERGY COMMISSION

CERTIFICATE OF COMPLIANCE		NRCC-LTI-E
Project Name: SGT. JOHN PINNEY MEMORIAL POOL REPLACEMENT	Report Page:	(Page 12 of 13)
	Date Prepared:	01-05-2024

V. DECLARATION OF REQUIRED CERTIFICATES OF ACCEPTANCE

Selections have been made based on information provided in this document. If any selections have been changed by the permit applicant, an explanation should be included in Table E. Additional Remarks. These documents must be provided to the building inspector during construction and any with "-A" in the form name must be completed through an Acceptance Test Technician Certification Provider (ATTCP). For more information visit: http://www.energy.ca.gov/title24/attcp/providers.html

Form/Title	Systems/Spaces To Be Field Verified
NRCA-LTI-02-A - Must be submitted for occupancy sensors and automatic time switch controls.	Main Entry Lobby; Check In-Reception; Sick Bay; Corridor-1; Janitor; Employee Restrm; Storage; Employee Shower; Mens Shower; Mens Locker; Mens Restroom; Womens Shower; Womens Locker; Womens Restroom; Accessible Restroom - 120; Accessible Restroom - 121; Corridor-2; Service Kitchen; Concessions; Pool Mechanical equipment rm; Pool mech equipment storage-1; Pool mech equipment storage-2; Fire Sprinkler Riser Room;
NRCA-LTI-03-A - Must be submitted for automatic daylight controls.	Main Entry Lobby; Check In-Reception; Community Room;
NRCA-LTI-04-A - Must be submitted for demand responsive lighting controls.	Whole Building Demand Response;

Generated Date/Time: Documentation Software: EnergyPro
CA Building Energy Efficiency Standards - 2022 Nonresidential Compliance Report Version: 2022.0.000 Schema Version: rev 20220101 Compliance ID: EnergyPro-5468-0524-1270 Report Generated: 2024-05-01 04:41:46

STATE OF CALIFORNIA
Indoor Lighting CALIFORNIA ENERGY COMMISSION

CERTIFICATE OF COMPLIANCE		NRCC-LTI-E
Project Name: SGT. JOHN PINNEY MEMORIAL POOL REPLACEMENT	Report Page:	(Page 13 of 13)
Project Address: 205 S WARNER ST	Date Prepared:	01-05-2024

DOCUMENTATION AUTHOR'S DECLARATION STATEMENT

I certify that this Certificate of Compliance documentation is accurate and complete.

Documentation Author Name: Manan H. Christian	Documentation Author Signature:
Company: Budlong & Associates	Signature Date: 2024-05-01
Address: 400 W. Ventura Blvd Suite 240	CEA/ HERS Certification Identification (if applicable):
City/State/Zip: Camarillo CA 93010	Phone: (805) 987-4001

RESPONSIBLE PERSON'S DECLARATION STATEMENT

I certify the following under penalty of perjury, under the laws of the State of California:

1. The information provided on this Certificate of Compliance is true and correct.
2. I am eligible under Division 3 of the Business and Professions Code to accept responsibility for the building design or system design identified on this Certificate of Compliance (responsible designer)
3. The energy features and performance specifications, materials, components, and manufactured devices for the building design or system design identified on this Certificate of Compliance conform to the requirements of Title 24, Part 1 and Part 6 of the California Code of Regulations.
4. The building design features or system design features identified on this Certificate of Compliance are consistent with the information provided on other applicable compliance documents, worksheets, calculations, plans and specifications submitted to the enforcement agency for approval with this building permit application.
5. I will ensure that a completed signed copy of this Certificate of Compliance shall be made available with the building permit(s) issued for the building, and made available to the enforcement agency for all applicable inspections. I understand that a completed signed copy of this Certificate of Compliance is required to be included with the documentation the builder provides to the building owner at occupancy.

Responsible Designer Name: Manan H. Christian	Responsible Designer Signature:
Company: Budlong & Associates	Date Signed: 2024-05-01
Address: 400 W. Ventura Blvd Suite 240	License: E 22864
City/State/Zip: Camarillo CA 93010	Phone: (805) 987-4001

Generated Date/Time: Documentation Software: EnergyPro
CA Building Energy Efficiency Standards - 2022 Nonresidential Compliance Report Version: 2022.0.000 Schema Version: rev 20220101 Compliance ID: EnergyPro-5468-0524-1270 Report Generated: 2024-05-01 04:41:46

AGENCY

REVIEWED FOR CODE COMPLIANCE BY: WILLDAN ENGINEERING

Approval of these plans & specifications shall not be construed to be a permit for, or an approval of any violation of any Federal, State, County or City laws or ordinances. One set of approved plans must be kept on the job until completion.

10:06:53 AM Jul 21, 2025

FLEWELLING & MOODY
architecture planning interiors

HEADQUARTERS OFFICE:
99 S. Lake Avenue, Suite 300
Pasadena, CA 91101
Phone: 323.543.8300
E-Mail: fm-pasadena@flewelling-moody.com

ANTELOPE VALLEY OFFICE:
1035 West Lancaster Boulevard
Lancaster, California 93534
Phone: 661.949.0771
E-Mail: fm-lancaster@flewelling-moody.com

An Employee Owned Corporation

ARCHITECT

CONSULTANT

Budlong
An MBE|SBE|DBE|LSBE Firm
Glendale|Downtown LA|Fremont|Camarillo
WWW.BUDLONG.COM
Job No. 23-140

MANAN H. CHRISTIAN
E 22864
07/2025
CIVIL
STATE OF CALIFORNIA

Drawn by: Author

Check by: Checker

Revisions

No.	Date	Description
	01/26/24	100% DD
	03/01/24	50% CD
	05/09/24	90% CD
	08/05/24	100% CD
	11/25/24	100% CD V2
	01/31/25	100% CD V3

All dimensions must be checked at the job by the contractor who accepts full responsibility for their accuracy under the contract. These plans & the specifications in connection therewith have been prepared for a specific site. Any and all responsibility for their use in whole or in part on any other site is hereby disclaimed by Flewelling & Moody.

CITY OF RIDGECREST

SGT. JOHN PINNEY MEMORIAL POOL REPLACEMENT

205 S WARNER ST, RIDGECREST, CA 93555

Drawing Title

ELECTRICAL T-24 FORMS - INDOOR (COMMUNITY BUILDING)

Job No. 3055-0100

Sheet No. **E7.01**

Date 05/09/2025

Autodesk Docs://23-140 - Pinney Pool Replacement/M

STATE OF CALIFORNIA
Indoor Lighting
CALIFORNIA ENERGY COMMISSION

CERTIFICATE OF COMPLIANCE — **NRCC-LTI-E**

This document is used to demonstrate compliance with requirements in 110.9, 110.12(c), 130.0, 130.1, 140.6 and 141.0(b)2 for indoor lighting scopes using the prescriptive path for nonresidential and hotel/motel occupancies. It is also used to document compliance with requirements in 160.5, 170.2(e) and 180.2(b)4 for indoor lighting scopes using the prescriptive path for multifamily occupancies. Multifamily includes dormitory and senior living facilities.

Project Name:	SGT. JOHN PINNEY MEMORIAL POOL REPLACEMENT	**Report Page:**	**(Page 1 of 13)**
Project Address:	205 S WARNER ST	**Date Prepared:**	10-06-2025

A. GENERAL INFORMATION

01	Project Location (city)	RIDGECREST	04 Total Conditioned Floor Area (ft²)	3,672
02	Climate Zone	14	05 Total Unconditioned Floor Area (ft²)	2,357
03	Occupancy Types Within Project (select all that apply):		06 # of Stories (Habitable Above Grade)	1

● Office ● Support Areas ● Warehouse ● All Other Occupancies

B. PROJECT SCOPE

This table includes any lighting systems that are within the scope of the permit application and are demonstrating compliance using the prescriptive path outlined in 140.6 / 170.2(e) or 141.0(b)2 / 180.2(b)4 for alterations.

Scope of Work	Conditioned Spaces		Unconditioned Spaces	
01	02	03	04	05
My Project Consists of (check all that apply):	Calculation Method	Area (ft²)	Calculation Method	Area (ft²)
☒ New Lighting System	Area Category Method	3672	Area Category Method	2357
☐ New Lighting System - Parking Garage				
Total Area of Work (ft²)	3672		2357	

STATE OF CALIFORNIA
Indoor Lighting
CALIFORNIA ENERGY COMMISSION
CERTIFICATE OF COMPLIANCE — **NRCC-LTI-E**
Project Name: SGT. JOHN PINNEY MEMORIAL POOL REPLACEMENT — **Report Page:** **(Page 2 of 13)** — **Date Prepared:** 10-06-2025

C. COMPLIANCE RESULTS

If any cell on this table says "DOES NOT COMPLY" or "COMPLIES with Exceptional Conditions" refer to Table D. for guidance.

	Allowed Lighting Power per 140.6(b) / 170.2(e) (Watts)						Adjusted Lighting Power per 140.6(a) / 170.2(e) (Watts)					Compliance Results
Lighting in conditioned and unconditioned spaces must not be combined for compliance per 140.6(b)1 / 170.2(e)	01 Complete Building 140.6(c)1 (See Table I)	02 Area Category 140.6(c)2 / 170.2(e)4 (See Table I)	03 Area Category Additional 140.6(c)2G / 170.2(e)4Av (+) (See Table I)	04 Tailored 140.6(c)3 / 170.2(e)4B (+) (See Table K)	05 Total Allowed (Watts)		06 Total Designed (Watts) (See Table F)	07 Adjustments PAF Lighting Control Credits 140.6(a)2 / 170.2(e)1B (-) (See Table P)		08 Total Adjusted (Watts) *Includes Adjustments		09
Conditioned		2,290	282		2,572	≥	2,352	0	=	2352		COMPLIES
Unconditioned		1,011.5	0		1,012	≥	974	0	=	974		COMPLIES
Controls Compliance (See Table H for Details)												COMPLIES
Rated Power Reduction Compliance (See Table Q for Details)												

D. EXCEPTIONAL CONDITIONS

This table is auto-filled with uneditable comments because of selections made or data entered in tables throughout the form.

E. ADDITIONAL REMARKS

This table includes remarks made by the permit applicant to the Authority Having Jurisdiction.

STATE OF CALIFORNIA
Indoor Lighting
CALIFORNIA ENERGY COMMISSION
CERTIFICATE OF COMPLIANCE — **NRCC-LTI-E**
Project Name: SGT. JOHN PINNEY MEMORIAL POOL REPLACEMENT — **Report Page:** **(Page 3 of 13)** — **Date Prepared:** 10-06-2025

F. INDOOR LIGHTING FIXTURE SCHEDULE

This table includes all planned permanent and portable lighting other than dwelling unit/ hotel/ motel room lighting. Multifamily dwelling unit and hotel/motel room lighting is documented in Table T. If using Table T to document lighting in multifamily common use areas providing shared provisions for living, eating, cooking or sanitation, those luminaires are not included here.

Designed Wattage: Conditioned Spaces

01 Name or Item Tag	02 Complete Luminaire Description	03 Modular (Track) Fixture	04 Small Aperture & Color Change[1]	05 Watts per luminaire[2]	06 How is Wattage determined	07 Total Number of Luminaires	08 Excluded per 140.6(a)3 / 170.2(e)2C	09 Design Watts	10 Field Inspector Pass	10 Field Inspector Fail
A1-4	A1-4 - 4ft Recessed Linear	No	NA	24	Mfr. Spec	35	No	840	☐	☐
A1-8	A1-8 - 8ft Recessed Linear	No	NA	48	Mfr. Spec	5	No	240	☐	☐
A2-4	A2 - 4ft Recessed Linear	No	NA	32	Mfr. Spec	9	No	288	☐	☐
A3-8	A3-8 - Linear Pendant	No	NA	38	Mfr. Spec	10	No	380	☐	☐
B1	B1- 6" Recessed downlight	No	NA	8.8	Mfr. Spec	27	No	237.6	☐	☐
C2-4	C2-4 - Surface Stip Light	No	NA	32	Mfr. Spec	3	No	96	☐	☐
E	E - Circular Pendant	No	NA	45	Mfr. Spec	6	No	270	☐	☐
					Total Designed Watts: CONDITIONED SPACES			2,352		

Designed Wattage: Unconditioned Spaces

01 Name or Item Tag	02 Complete Luminaire Description	03 Modular (Track) Fixture	04 Small Aperture & Color Change[1]	05 Watts per luminaire[2]	06 How is Wattage determined	07 Total Number of Luminaires	08 Excluded per 140.6(a)3 / 170.2(e)2C	09 Design Watts	10 Field Inspector Pass	10 Field Inspector Fail
A1-4	A1-4 - 4ft Recessed Linear	No	NA	24	Mfr. Spec	9	No	216	☐	☐
B1	B1- 6" Recessed downlight	No	NA	8.8	Mfr. Spec	5	No	44	☐	☐
C1-4	C1-4 - 4ft Pendant Stip Light	No	NA	26	Mfr. Spec	12	No	312	☐	☐
C2-4	C2-4 - Surface Stip Light	No	NA	32	Mfr. Spec	1	No	32	☐	☐
C3-8	C3-8 - 8ft Pendant Stip Light	No	NA	37	Mfr. Spec	10	No	370	☐	☐
					Total Designed Watts: UNCONDITIONED SPACES			974		

[1]*FOOTNOTE: Design Watts for small aperture and color changing luminaires which qualify per 140.6(a)4B / 170.2(e)2D is adjusted to be 75%/80% of their rated wattage. Table F automatically makes this adjustment, the permit applicant should enter full rated wattage in column 05.*

STATE OF CALIFORNIA
Indoor Lighting
CALIFORNIA ENERGY COMMISSION
CERTIFICATE OF COMPLIANCE — **NRCC-LTI-E**
Project Name: SGT. JOHN PINNEY MEMORIAL POOL REPLACEMENT — **Report Page:** **(Page 4 of 13)** — **Date Prepared:** 10-06-2025

G. MODULAR LIGHTING SYSTEMS

This section does not apply to this project.

H. INDOOR LIGHTING CONTROLS (Not including PAFs)

This table includes lighting controls for conditioned and unconditioned spaces.

Building Level Controls

01	02	03 Field Inspector Pass	03 Field Inspector Fail
Mandatory Demand Response 110.12(c)	Shut-off controls 130.1(c) / 160.5(b)4C		
Required >= 4,000W subject to multilevel	See Area/Space Level Controls	☐	☐

STATE OF CALIFORNIA
Indoor Lighting
CALIFORNIA ENERGY COMMISSION
CERTIFICATE OF COMPLIANCE — **NRCC-LTI-E**
Project Name: SGT. JOHN PINNEY MEMORIAL POOL REPLACEMENT — **Report Page:** **(Page 5 of 13)** — **Date Prepared:** 10-06-2025

H. INDOOR LIGHTING CONTROLS (Not including PAFs)

Area Level Controls

04 Area Description	05 Complete Building or Area Category Primary Function Area	06 Manual Area Controls 130.1(a) / 160.5(b)4A	07 Multi-Level Controls 130.1(b) / 160.5(b)4B	08 Shut-Off Controls 130.1(c) // 160.5(b)4C	09 Primary/Skylit Daylighting 130.1(d) / 160.5(b)4D	10 Secondary Daylighting 130.1(d) / 160.5(b)4D	11 Interlocked Systems 140.6(a)1/ 170.2(e)2A	12 Field Inspector Pass	12 Field Inspector Fail
Main Entry Lobby	Main Entry Lobby	Readily Accessible	Dimmer	Occupancy Sensor	Included	Included	No	☐	☐
Check In-Reception	Main Entry Lobby	Readily Accessible	Dimmer	Occupancy Sensor	Included	Included	No	☐	☐
Administration Office	Office (>250 square feet)	Readily Accessible	Dimmer	Partial On 130.1(c)/ 160.5(b)4C	NA: General Ltg < 120W	NA: General Ltg < 120W	No	☐	☐
Sick Bay	All Other Space Types	Readily Accessible	Dimmer	Occupancy Sensor	NA: General Ltg < 120W	NA: General Ltg < 120W	No	☐	☐
Life Guard Facilities	Office (<=250 square feet)	Readily Accessible	Dimmer	Partial On 130.1(c)/ 160.5(b)4C	NA: General Ltg < 120W	NA: General Ltg < 120W	No	☐	☐
MDF	Electrical Mechancial Telephone Room	Readily Accessible	NA: General Ltg <= 0.5W/SF	NA: Elec. equip. rm	NA: General Ltg < 120W	NA: General Ltg < 120W	No	☐	☐
Corridor-1	Corridor	Readily Accessible	NA: General Ltg <= 0.5W/SF	Occupancy Sensor	NA: General Ltg < 120W	NA: General Ltg < 120W	No	☐	☐
Elect Rm	Electrical Mechancial Telephone Room	Readily Accessible	Dimmer	NA: Elec. equip. rm	NA: General Ltg < 120W	NA: General Ltg < 120W	No	☐	☐
Janitor	All Other Space Types	Readily Accessible	NA: General Ltg <= 0.5W/SF	Occupancy Sensor	NA: General Ltg < 120W	NA: General Ltg < 120W	No	☐	☐
Employee Restrm	Restroom	Readily Accessible	NA: Restrooms	Occupancy Sensor	NA: General Ltg < 120W	NA: General Ltg < 120W	No	☐	☐
Storage	Commercial Industrial Storage Shipping	Readily Accessible	Dimmer	Occupancy Sensor	NA: General Ltg < 120W	NA: General Ltg < 120W	No	☐	☐

STATE OF CALIFORNIA
Indoor Lighting
CALIFORNIA ENERGY COMMISSION
CERTIFICATE OF COMPLIANCE — **NRCC-LTI-E**
Project Name: SGT. JOHN PINNEY MEMORIAL POOL REPLACEMENT — **Report Page:** **(Page 6 of 13)** — **Date Prepared:** 10-06-2025

H. INDOOR LIGHTING CONTROLS (Not including PAFs)

Employee Shower	Restroom	Readily Accessible	NA: Restrooms	Occupancy Sensor	NA: General Ltg < 120W	NA: General Ltg < 120W	No	☐	☐
Mens Shower	Restroom	Readily Accessible	NA: Restrooms	Occupancy Sensor	NA: General Ltg < 120W	NA: General Ltg < 120W	No	☐	☐
Mens Locker	Locker/Dressing Room	Readily Accessible	Dimmer	Occupancy Sensor	NA: General Ltg < 120W	NA: General Ltg < 120W	No	☐	☐
Mens Restroom	Restroom	Readily Accessible	NA: Restrooms	Occupancy Sensor	NA: General Ltg < 120W	NA: General Ltg < 120W	No	☐	☐
Womens Shower	Restroom	Readily Accessible	NA: Restrooms	Occupancy Sensor	NA: General Ltg < 120W	NA: General Ltg < 120W	No	☐	☐
Womens Locker	Locker/Dressing Room	Readily Accessible	Dimmer	Occupancy Sensor	NA: General Ltg < 120W	NA: General Ltg < 120W	No	☐	☐
Womens Restroom	Restroom	Readily Accessible	NA: Restrooms	Occupancy Sensor	NA: General Ltg < 120W	NA: General Ltg < 120W	No	☐	☐
Accessible Restroom - 120	Restroom	Readily Accessible	NA: Restrooms	Occupancy Sensor	NA: General Ltg < 120W	NA: General Ltg < 120W	No	☐	☐
Accessible Restroom - 121	Restroom	Readily Accessible	NA: Restrooms	Occupancy Sensor	NA: General Ltg < 120W	NA: General Ltg < 120W	No	☐	☐
Corridor-2	Corridor	Readily Accessible	NA: General Ltg <= 0.5W/SF	Occupancy Sensor	NA: General Ltg < 120W	NA: General Ltg < 120W	No	☐	☐
Service Kitchen	Kitchen/ Food Preparation	Readily Accessible	Dimmer	Occupancy Sensor	NA: General Ltg < 120W	NA: General Ltg < 120W	No	☐	☐
Concessions	All Other Space Types	Readily Accessible	Dimmer	Occupancy Sensor	NA: General Ltg < 120W	NA: General Ltg < 120W	No	☐	☐
Pool Mechanical equipment rm	Electrical Mechancial Telephone Room	Readily Accessible	NA: General Ltg <= 0.5W/SF	Occupancy Sensor	NA: General Ltg < 120W	NA: General Ltg < 120W	No	☐	☐
Pool mech equipment storage-1	All Other Space Types	Readily Accessible	NA: General Ltg <= 0.5W/SF	Occupancy Sensor	NA: General Ltg < 120W	NA: General Ltg < 120W	No	☐	☐
Pool mech equipment storage-2	All Other Space Types	Readily Accessible	NA: General Ltg <= 0.5W/SF	Occupancy Sensor	NA: General Ltg < 120W	NA: General Ltg < 120W	No	☐	☐

STATE OF CALIFORNIA
Indoor Lighting
CALIFORNIA ENERGY COMMISSION
CERTIFICATE OF COMPLIANCE — **NRCC-LTI-E**
Project Name: SGT. JOHN PINNEY MEMORIAL POOL REPLACEMENT — **Report Page:** **(Page 7 of 13)** — **Date Prepared:** 10-06-2025

H. INDOOR LIGHTING CONTROLS (Not including PAFs)

Fire Sprinkler Riser Room	Electrical Mechancial Telephone Room	Readily Accessible	Dimmer	Occupancy Sensor	NA: General Ltg < 120W	NA: General Ltg < 120W	No	☐	☐
							13		
						Plan Sheet Showing Daylit Zones:			
							Ed.03		

I. LIGHTING POWER ALLOWANCE: COMPLETE BUILDING OR AREA CATEGORY METHODS

Each area complying using the Complete Building or Area Category Methods per 140.6(b) are included in this table. Column 06 indicates if additional lighting power allowances per 140.6(c) or adjustments per 140.6(a) are being used..

Conditioned Spaces

01 Area Description	02 Complete Building or Area Category Primary Function Area	03 Allowed Density (W/ft²)	04 Area (ft²)	05 Allowed Wattage (Watts)	06 Additional Allowance / Adjustment Area Category	06 Additional Allowance / Adjustment PAF
FCU-1 Front Desk	Main Entry Lobby	0.7	1,129.7	790.8	Yes	No
FCU-2 Admin Office # 2	Office (<=250 square feet)	0.65	118.3	76.9	No	No
FCU-3 Sick Bay # 3	All Other Space Types	0.4	90	36	No	No
FCU-4 Life Guard Facilities # 4	Office (<=250 square feet)	0.65	170	110.5	No	No
FCU-4 Corridor	Corridor	0.4	205.2	82.1	No	No
Service Kitchen # 1&Concession	Kitchen/ Food Preparation	0.95	316.2	300.4	No	No
MDF # 5	Electrical Mechancial Telephone Room	0.4	90	36	No	No
Women's/Men's Locker Rooms	Locker/Dressing Room	0.45	630.8	283.8	No	No
Women's/Men's Shower Room	Restroom	0.65	229.6	149.2	No	No
Women's/Men's Rest Room	Restroom	0.65	590	383.5	No	No
FCU-9/HP-3 Electrical Room #108	Electrical Mechancial Telephone Room	0.4	102	40.8	No	No
		TOTALS:	3,671.8	2,290	See Tables J, or P for detail	

Unconditioned Spaces

01	02	03	04	05	06

STATE OF CALIFORNIA
Indoor Lighting
CALIFORNIA ENERGY COMMISSION
CERTIFICATE OF COMPLIANCE — **NRCC-LTI-E**
Project Name: SGT. JOHN PINNEY MEMORIAL POOL REPLACEMENT — **Report Page:** **(Page 8 of 13)** — **Date Prepared:** 10-06-2025

I. LIGHTING POWER ALLOWANCE: COMPLETE BUILDING OR AREA CATEGORY METHODS

Area Description	Complete Building or Area Category Primary Function Area	Allowed Density (W/ft²)	Area (ft²)	Allowed Wattage (Watts)	Additional Allowance / Adjustment Area Category	Additional Allowance / Adjustment PAF
POOL MECHANICAL EQUIPMENT	Electrical Mechancial Telephone Room	0.4	1,570	628	No	No
POOL EQ. STORAGE ZONES	Commercial Industrial Warehouse	0.4	220	88	No	No
JANITOR	Commercial Industrial Warehouse	0.4	85	34	No	No
Fire Sprinkler Riser Room	Electrical Mechancial Telephone Room	0.4	25	10	No	No
EMPLOYEE SHOWER ROOM	Restroom	0.65	70	45.5	No	No
STORAGE ROOM	Commercial Industrial Warehouse	0.4	57	22.8	No	No
Restrooms	Restroom	0.65	205	133.2	No	No
Corridor-2	Corridor	0.4	125	50	No	No
		TOTALS:	2,357	1,011.5	See Tables J, or P for detail	

STATE OF CALIFORNIA
Indoor Lighting
CALIFORNIA ENERGY COMMISSION
CERTIFICATE OF COMPLIANCE — **NRCC-LTI-E**
Project Name: SGT. JOHN PINNEY MEMORIAL POOL REPLACEMENT — **Report Page:** **(Page 9 of 13)** — **Date Prepared:** 10-06-2025

J. ADDITIONAL ALLOWANCE: AREA CATEGORY METHOD QUALIFYING LIGHTING SYSTEM

All areas indicated in Table I as using an additional allowance using the Area Category Method have been included in this table to calculate the additional allowance per Table 140.6-C (170.2-M

Conditioned Spaces

01 Area Description	02 Primary Function Area	03 Applicable Qualifying Lighting System from Table 140.6-C	04 Allowed Density (W/ft² or W/lf or W/unit)	05 Ltg Area, Length or ATM/Mirror (ft², f or #)	06 Extra Allowance (Watts)	07 Luminaire Name or Item Tag	08 Watts per Luminaire	09 Number of Luminaires	10 Total Design Watts
FCU-1 Front Desk	Main Entry Lobby	Decorative/Display A	0.25	1129.7	282.4	A3-8	38	5	190
						E	45	3	135
						A3-8	38	5	190
						E	45	3	135

Total Design Watts	Calculated Allowance (Watts)	Total Additional Allowance for this area:
650	282.4	282.4
	11	
Total Additional Allowance (Watts) CONDITIONED SPACES	282	

K. TAILORED METHOD GENERAL LIGHTING POWER ALLOWANCE

This section does not apply to this project.

L. ADDITIONAL LIGHTING ALLOWANCE: TAILORED WALL DISPLAY

This section does not apply to this project.

STATE OF CALIFORNIA
Indoor Lighting
CALIFORNIA ENERGY COMMISSION
CERTIFICATE OF COMPLIANCE — **NRCC-LTI-E**
Project Name: SGT. JOHN PINNEY MEMORIAL POOL REPLACEMENT — **Report Page:** **(Page 10 of 13)** — **Date Prepared:** 10-06-2025

M. ADDITIONAL LIGHTING ALLOWANCE: TAILORED FLOOR AND TASK LIGHTING

This section does not apply to this project.

N. ADDITIONAL LIGHTING ALLOWANCE: TAILORED DECORATIVE /SPECIAL EFFECTS

This section does not apply to this project.

O. ADDITIONAL LIGHTING ALLOWANCE: TAILORED VERY VALUABLE MERCHANDISE

This section does not apply to this project.

P. POWER ADJUSTMENT: LIGHTING CONTROL CREDIT (POWER ADJUSTMENT FACTOR (PAF))

This section does not apply to this project.

Q. RATED POWER REDUCTION COMPLIANCE FOR ONE-FOR-ONE ALTERATIONS

This section does not apply to this project.

R. 80% LIGHTING POWER FOR ALL ALTERATIONS - CONTROLS EXCEPTIONS

This section does not apply to this project.

S. DAYLIGHT DESIGN POWER ADJUSTMENT FACTOR (PAF)

This section does not apply to this project.

T. DWELLING UNIT LIGHTING

This section does not apply to this project.

STATE OF CALIFORNIA
Indoor Lighting
CALIFORNIA ENERGY COMMISSION
CERTIFICATE OF COMPLIANCE — **NRCC-LTI-E**
Project Name: SGT. JOHN PINNEY MEMORIAL POOL REPLACEMENT — **Report Page:** **(Page 11 of 13)** — **Date Prepared:** 10-06-2025

U. DECLARATION OF REQUIRED CERTIFICATES OF INSTALLATION

Selections have been made based on information provided in this document. If any selections have been changed by permit applicant, an explanation should be included in Table E. Additional Remarks. These documents must be provided to the building inspector during construction and can be found online

Form/Title
NRCI-LTI-E - Must be submitted for all buildings

STATE OF CALIFORNIA
Indoor Lighting
CALIFORNIA ENERGY COMMISSION
CERTIFICATE OF COMPLIANCE — **NRCC-LTI-E**
Project Name: SGT. JOHN PINNEY MEMORIAL POOL REPLACEMENT — **Report Page:** **(Page 12 of 13)** — **Date Prepared:** 10-06-2025

V. DECLARATION OF REQUIRED CERTIFICATES OF ACCEPTANCE

Selections have been made based on information provided in this document. If any selections have been changed by the permit applicant, an explanation should be included in Table E. Additional Remarks. These documents must be provided to the building inspector during construction and any with "LA" in the form name must be completed through an Acceptance Test Technician Certification Provider (ATTCP). For more information visit: http://www.energy.ca.gov/title24/attcp/providers.html

Form/Title	System/Spaces To Be Field Verified
NRCA-LTI-02-A - Must be submitted for occupancy sensors and automatic time switch controls.	Main Entry Lobby; Check In-Reception; Sick Bay; Corridor-1; Janitor; Employee Restrm; Storage; Employee Shower; Mens Shower; Mens Locker; Mens Restroom; Womens Shower; Womens Locker; Womens Restroom; Accessible Restroom - 120; Accessible Restroom - 121; Corridor-2; Service Kitchen; Concessions; Pool Mechanical equipment rm; Pool mech equipment storage-1; Pool mech equipment storage-2; Fire Sprinkler Riser Room;
NRCA-LTI-03-A - Must be submitted for automatic daylight controls.	Main Entry Lobby; Check In-Reception;
NRCA-LTI-04-A - Must be submitted for demand responsive lighting controls.	Whole Building Demand Response;

STATE OF CALIFORNIA
Indoor Lighting
CALIFORNIA ENERGY COMMISSION
CERTIFICATE OF COMPLIANCE — **NRCC-LTI-E**
Project Name: SGT. JOHN PINNEY MEMORIAL POOL REPLACEMENT — **Report Page:** **(Page 13 of 13)** — **Date Prepared:** 10-06-2025

DOCUMENTATION AUTHOR'S DECLARATION STATEMENT

I certify that this Certificate of Compliance documentation is accurate and complete.

Documentation Author Name: Manan H. Christian	Documentation Author Signature:
Company: Budlong & Associates	Signature Date: 2025-06-10
Address: 400 W. Ventura Blvd Suite 240	CEA/ HERS Certification Identification (if applicable):
City/State/Zip: Camarillo CA 93010	Phone: (805) 987-4001

RESPONSIBLE PERSON'S DECLARATION STATEMENT

I certify the following under penalty of perjury, under the laws of the State of California:

1. The information provided on this Certificate of Compliance is true and correct.
2. I am eligible under Division 3 of the Business and Professions Code to accept responsibility for the building design or system design identified on this Certificate of Compliance (responsible designer)
3. The energy features and performance specifications, materials, components, and manufactured devices for the building design or system design identified on this Certificate of Compliance conform to the requirements of Title 24, Part 1 and Part 6 of the California Code of Regulations.
4. The building design features or system design features identified on this Certificate of Compliance are consistent with the information provided on other applicable compliance documents, worksheets, calculations, plans and specifications submitted to the enforcement agency for approval with this building permit application.
5. I will ensure that a completed signed copy of this Certificate of Compliance shall be made available with the building permit(s) issued for the building, and made available to the enforcement agency for all applicable inspections. I understand that a completed signed copy of this Certificate of Compliance is required to be included with the documentation the builder provides to the building owner at occupancy.

Responsible Designer Name: Manan H. Christian	Responsible Designer Signature:
Company: Budlong & Associates	Date Signed: 2025-06-10
Address: 400 W. Ventura Blvd Suite 240	License: E 22864
City/State/Zip: Camarillo CA 93010	Phone: (805) 987-4001

AGENCY

FLEWELLING & MOODY
architecture planning interiors

HEADQUARTERS OFFICE:
99 S. Lake Avenue, Suite 300
Pasadena, CA 91101
Phone: 323.543.8300
E-Mail: fm-pasadena@flewelling-moody.com

ANTELOPE VALLEY OFFICE:
1035 West Lancaster Boulevard
Lancaster, California 93534
Phone: 661.949.0771
E-Mail: fm-lancaster@flewelling-moody.com

An Employee Owned Corporation

ARCHITECT

CONSULTANT

Budlong
An MBE|SBE|DBE|LSBE Firm
Glendale|Downtown LA|Fremont|Camarillo
WWW.BUDLONG.COM
Job No. 23-140

REGISTERED PROFESSIONAL ENGINEER MANAN H. CHRISTIAN E 22864 ELECTRICAL STATE OF CALIFORNIA

Drawn by: Author
Check by: Checker

Revisions

No.	Date	Description
	01/26/24	100% DD
	03/01/24	50% CD
	05/09/24	90% CD
	08/05/24	100% CD
	11/25/24	100% CD V2
	01/31/25	100% CD V3
1	08/27/2025	BID ALTERNATE

All dimensions must be checked at the job by the contractor who accepts full responsibility for their accuracy under the contract. These plans & the specifications in connection therewith have been prepared for a specific site. Any and all responsibility for their use in whole or in part on any other site is hereby disclaimed by Flewelling & Moody.

CITY OF RIDGECREST

SGT. JOHN PINNEY MEMORIAL POOL REPLACEMENT

205 S WARNER ST, RIDGECREST, CA 93555

Drawing Title

ELECTRICAL T-24 FORMS - INDOOR (COMMUNITY BUILDING) ALT 6

Job No. 3055-0000
Sheet No. **E7.01A6**
Date 08/07/2024

STATE OF CALIFORNIA
Outdoor Lighting CALIFORNIA ENERGY COMMISSION

CERTIFICATE OF COMPLIANCE		NRCC-LTO-E
Project Name: SGT. JOHN PINNEY MEMORIAL POOL REPLACEMENT	Report Page:	(Page 1 of 9)
Project Address: 205 S WARNER ST	Date Prepared:	20-11-2024

A. GENERAL INFORMATION

01	Project Location (city)	RIDGECREST	04	Total Illuminated Hardscape Area (ft²)	66198
02	Climate Zone	14			
03	Outdoor Lighting Zone per Title 24 Part 1	10.114 or as designated by Authority Having Jurisdiction (AHJ):			
☐	LZ-0: Very Low - Undeveloped Parkland	☒ LZ-2: Moderate - Urban Clusters	☐	LZ-4: High - Must be reviewed by CA Energy Commission for Approval	
☐	LZ-1: Low - Rural Areas	☐ LZ-3: Moderately High - Urban Areas			
05	Occupancy Types within Project				

● Office ● Support Areas ● Warehouse ● All Other Occupancies

B. PROJECT SCOPE

This table includes outdoor lighting systems that are within the scope of the permit application and are demonstrating compliance using the prescriptive path outlined in 140.7 / 170.2(e)6 or 141.0(b)2I. / 180.2(b)4Bv for alterations.

My Project Consists of:

01	02
☒ New Lighting System	Must Comply with Allowances from 140.7 / 170.2(e)6
☐ Altered Lighting System	Is your alteration increasing the connected lighting load (Watts)? ○ Yes ○ No

03	04	05
% of Existing Luminaires Being Altered[1]	Sum Total of Luminaires Being Added or Altered	Calculation Method
☐ < 10% ☐ >= 10% and < 50% ☐ >= 50%		

Please proceed to Table F, Outdoor Lighting Fixture Schedule to define the project's luminaires.

[1] FOOTNOTES: % of Existing Luminaires Being Altered = (Sum Total of Luminaires Being Added or Altered / Existing Luminaires within the Scope of the Permit Application) x 100.

Generated Date/Time: Documentation Software: EnergyPro
CA Building Energy Efficiency Standards - 2022 Nonresidential Compliance Report Version: 2022.0.000 Schema Version: rev 20220101 Compliance ID: EnergyPro-5468-1124-1748 Report Generated: 2024-11-19 22:23:48

STATE OF CALIFORNIA
Outdoor Lighting CALIFORNIA ENERGY COMMISSION

CERTIFICATE OF COMPLIANCE		NRCC-LTO-E
Project Name: SGT. JOHN PINNEY MEMORIAL POOL REPLACEMENT	Report Page:	(Page 2 of 9)
	Date Prepared:	20-11-2024

C. COMPLIANCE RESULTS

Results in this table are automatically calculated from data input and calculations in Tables F through N. Note: if any cell on this table says "COMPLIES with Exceptional Conditions" refer to Table D. Exceptional Conditions for guidance or see applicable Table referenced below.

Calculations of Total Allowed Lighting Power (Watts) 140.7 / 170.2(e)6i or 141.0(b)2L / 180.2(b)4Bv												Compliance Results		
01		02		03		04		05		06		07		08	09
General Hardscape Allowance 140.7(d)1 / 170.2(e)6i (See Table I)	+	Per Application 140.7(d)2 / 170.2(e)6i (See Table J)	+	Sales Frontage 140.7(d)2 (See Table K)	+	Ornamental 140.7(d)2 / 170.2(e)6i (See Table L)	+	Per Specific Area 140.7(d)2 / 170.2(e)6i (See Table M)	OR	Existing Power Allowance 141.0(b)2L / 180.2(b)4Bv (See Table N)	=	**Total Allowed** (Watts)	≥	**Total Actual** (Watts)	**07 must be >= 08**
1,851	+	15	+	---	+	---	+	---	OR	---	+	1,866	≥	1,010	COMPLIES
Shielding Compliance (See Table G for Details)															N/A
Controls Compliance (See Table H for Details)															COMPLIES

D. EXCEPTIONAL CONDITIONS

This table is auto-filled with uneditable comments because of selections made or data entered in tables throughout the form.

E. ADDITIONAL REMARKS

This table includes remarks made by the permit applicant to the Authority Having Jurisdiction.

Generated Date/Time: Documentation Software: EnergyPro
CA Building Energy Efficiency Standards - 2022 Nonresidential Compliance Report Version: 2022.0.000 Schema Version: rev 20220101 Compliance ID: EnergyPro-5468-1124-1748 Report Generated: 2024-11-19 22:23:48

STATE OF CALIFORNIA
Outdoor Lighting CALIFORNIA ENERGY COMMISSION

CERTIFICATE OF COMPLIANCE		NRCC-LTO-E
Project Name: SGT. JOHN PINNEY MEMORIAL POOL REPLACEMENT	Report Page:	(Page 3 of 9)
	Date Prepared:	20-11-2024

F. OUTDOOR LIGHTING FIXTURE SCHEDULE

For new or altered lighting systems demonstrating compliance with 140.7 / 170.2(e)6 all new luminaires being installed and any existing luminaires remaining or being moved within the spaces covered by the permit application are included in the Table below. For altered lighting systems using the Existing Power method per 141.0(b)2L only new luminaires being installed and replacement luminaires being installed as part of the project scope are included (ie, existing luminaires remaining or existing luminaires being moved are not included). Outdoor lighting attached to multifamily buildings and controlled from the inside of a dwelling unit are included in Table H, and are not included here. All other multifamily outdoor lighting is included here.

Designed Wattage:

01	02	03	04	05	06	07	08	09	10
Name or Item Tag	Complete Luminaire Description	Watts per luminaire[1, 2]	How is Wattage determined	Total Number Luminaires [3]	Luminaire Status[5]	Excluded per 140.7(a) / 170.2(e)6A	Design Watts	Cutoff Req. > 6,200 initial lumen output 130.2(b) / 160.5(c)1[4]	Field Inspector: Pass / Fail
B1	B1- 6" Recessed downlight	☐ Linear	8.8	Mfr. Spec	2	New	☐	17.6	NA; < 6200 lumens	☐ ☐
F	F - Wallpack LED Fixture	☐ Linear	35	Mfr. Spec	10	New	☐	350	NA; < 6200 lumens	☐ ☐
H1	H1 - Wall Mount Cylindrical Fixture	☐ Linear	26	Mfr. Spec	2	New	☐	52	NA; < 6200 lumens	☐ ☐
H2	H2 - Wall Mount Cylindrical Fixture	☐ Linear	14	Mfr. Spec	6	New	☐	84	NA; < 6200 lumens	☐ ☐
I	I- BOLLARD	☐ Linear	11	Mfr. Spec	1	New	☐	11	NA; < 6200 lumens	☐ ☐
S1	S1-Parking Pole Light	☐ Linear	33	Mfr. Spec	13	New	☐	429	NA; < 6200 lumens	☐ ☐
S2	S2-Parking Pole Light	☐ Linear	33	Mfr. Spec	2	New	☐	66	NA; < 6200 lumens	☐ ☐
							Total Design Watts:	1010		

* NOTES: Selections with a * require a note in the space below explaining how compliance is achieved.
EX: Luminaire is lighting a statue; EXCEPTION 2 to 130.2(b)

[1] FOOTNOTES: Authority Having Jurisdiction may ask for luminaire cut sheets to confirm wattage used for compliance per 130.0(c) / 160.5(b)
[2] For linear luminaires, wattage should be indicated as W/lf instead of Watts/luminaire. Total linear feet should be indicated in column 05 instead of number of luminaires.

Generated Date/Time: Documentation Software: EnergyPro
CA Building Energy Efficiency Standards - 2022 Nonresidential Compliance Report Version: 2022.0.000 Schema Version: rev 20220101 Compliance ID: EnergyPro-5468-1124-1748 Report Generated: 2024-11-19 22:23:48

STATE OF CALIFORNIA
Outdoor Lighting CALIFORNIA ENERGY COMMISSION

CERTIFICATE OF COMPLIANCE		NRCC-LTO-E
Project Name: SGT. JOHN PINNEY MEMORIAL POOL REPLACEMENT	Report Page:	(Page 4 of 9)
	Date Prepared:	20-11-2024

F. OUTDOOR LIGHTING FIXTURE SCHEDULE

For new or altered lighting systems demonstrating compliance with 140.7 / 170.2(e)6 all new luminaires being installed and any existing luminaires remaining or being moved within the spaces covered by the permit application are included in the Table below. For altered lighting systems using the Existing Power method per 141.0(b)2L only new luminaires being installed and replacement luminaires being installed as part of the project scope are included (ie, existing luminaires remaining or existing luminaires being moved are not included). Outdoor lighting attached to multifamily buildings and controlled from the inside of a dwelling unit are included in Table H, and are not included here. All other multifamily outdoor lighting is included here.

Designed Wattage:

01	02	03	04	05	06	07	08	09	10

[1] Select "New" for new luminaires in a new outdoor lighting project, or for added luminaires in an alteration. Select "Altered" for replacement luminaires in an alteration. Select "Existing to Remain" for existing luminaires within the project scope that are not being altered and are remaining. Select "Existing Reinstalled" for existing luminaires which are being removed and reinstalled as part of the project scope.
[4] Compliance with mandatory shielding requirements is required for luminaires with initial lumen output >= 6,200 unless exempted by 130.2(b)/ 160.5(c)

G. SHIELDING REQUIREMENTS (BUG)

This section does not apply to this project.

Generated Date/Time: Documentation Software: EnergyPro
CA Building Energy Efficiency Standards - 2022 Nonresidential Compliance Report Version: 2022.0.000 Schema Version: rev 20220101 Compliance ID: EnergyPro-5468-1124-1748 Report Generated: 2024-11-19 22:23:48

STATE OF CALIFORNIA
Outdoor Lighting CALIFORNIA ENERGY COMMISSION

CERTIFICATE OF COMPLIANCE		NRCC-LTO-E
Project Name: SGT. JOHN PINNEY MEMORIAL POOL REPLACEMENT	Report Page:	(Page 5 of 9)
	Date Prepared:	20-11-2024

H. OUTDOOR LIGHTING CONTROLS

This table demonstrates compliance with controls requirements for all new or altered luminaires installed as part of the permit application. For alteration projects, luminaires which are existing to remain (ie untouched) and luminaires which are removed and reinstalled (wiring only) do not need to be included in this table even if they are within the spaces covered by the permit application.
Outdoor lighting for nonresidential buildings, parking garages and common service areas in multifamily buildings must be documented separately from outdoor lighting attached to multifamily buildings and controlled from the inside of a dwelling unit

Mandatory Controls for Nonresidential Occupancies, Parking Garages & Common Areas in Multifamily Buildings

01	02	03	04	05	
Area Description	Shut-Off 130.2(c)1 / 160.5(c)	Auto-Schedule 130.2(c)2 / 160.5(c)	Motion Sensor 130.2(c)3 / 160.5(c)	Field Inspector	
				Pass	Fail
Building Exterior Lighting	Astronomical Timer	Provided	NA: Each Luminaire <= 40 Watts	☐	☐
Building Entrance	Astronomical Timer	Provided	NA: Each Luminaire <= 40 Watts	☐	☐
Parking Lot	Astronomical Timer	Provided	NA: Each Luminaire <= 40 Watts	☐	☐
Exterior Sitting Area	Astronomical Timer	Provided	NA: Each Luminaire <= 40 Watts	☐	☐
Pool Deck Lighting	Astronomical Timer	Provided	NA: Each Luminaire <= 40 Watts	☐	☐

[1] FOOTNOTE: Text has been abbreviated, please refer to Table 160.5-A to confirm compliance with the specific light source technologies listed.
[2] Authority having jurisdiction may ask for cutsheets or other documentation to confirm compliance of light source.
[3] Recessed luminaires marked for use in fire-rated installations, and recessed luminaires installed in non-insulated ceilings are excepted from ii and iii.

Generated Date/Time: Documentation Software: EnergyPro
CA Building Energy Efficiency Standards - 2022 Nonresidential Compliance Report Version: 2022.0.000 Schema Version: rev 20220101 Compliance ID: EnergyPro-5468-1124-1748 Report Generated: 2024-11-19 22:23:48

STATE OF CALIFORNIA
Outdoor Lighting CALIFORNIA ENERGY COMMISSION

CERTIFICATE OF COMPLIANCE		NRCC-LTO-E
Project Name: SGT. JOHN PINNEY MEMORIAL POOL REPLACEMENT	Report Page:	(Page 6 of 9)
	Date Prepared:	20-11-2024

I. LIGHTING POWER ALLOWANCE (per 140.7 / 170.2(e))

This table includes areas using allowance calculations per 140.7 / 170.2(e). General Hardscape Allowance is per Table 140.7-A/Table 170.2-R while "Use it or lose it" Allowances are per Table 140.7-B /Table 170.2-S. Indicate which allowances are being used to expand sections for user input. Luminaires that qualify for one of the "Use it or lose it" allowances shall not qualify for another "Use it or lose it" allowance.
Outdoor lighting attached to multifamily buildings and controlled from the inside of a dwelling unit are included in Table H, and are not included here. All other multifamily outdoor lighting is included here.

Calculated General Hardscape Lighting Power Allowance per Table 140.7-A for Nonresidential & Hotel/Motel

01								
	☒ General Hardscape Allowance Table I (below)	"Use it or lose it" Allowance (select all that apply) (select all that apply)						
		☒ Per Application Table J	☐ Sales Frontage Table K	☐ Ornamental Table L		☐ Per Specific Area Table M		
02	03	04	05	06	07	08	09	
Area Description	Area Wattage Allowance (AWA)			Linear Wattage Allowance (LWA)			Total General AWA + LWA (Watts)	
	Illuminated Area (ft^2)	Allowed Density (W/ft^2)	Area Allowance (Watts)	Perimeter Length (lf)	Allowed Density (W/lf)	Linear Allowance (Watts)		
Bulding Exterior Lighting	2862	0.019	54.4	632	0.2	94.8	149	
Parking Lot	28011	0.019	532.2	1044	0.2	156.6	689	
EXTERIOR SITTING AREA	1011	0.019	19.2	133	0.2	20	39	
POOL DECK LIGHTING	34314	0.019	652	811	0.2	121.6	774	
Initial Wattage Allowance for Entire Site (Watts):							200	
Instances of Initial Wattage Allowance (LZ 0 only)[1]								
Total General Hardscape Allowance (Watts):							1851	

Generated Date/Time: Documentation Software: EnergyPro
CA Building Energy Efficiency Standards - 2022 Nonresidential Compliance Report Version: 2022.0.000 Schema Version: rev 20220101 Compliance ID: EnergyPro-5468-1124-1748 Report Generated: 2024-11-19 22:23:48

STATE OF CALIFORNIA
Outdoor Lighting CALIFORNIA ENERGY COMMISSION

CERTIFICATE OF COMPLIANCE		NRCC-LTO-E
Project Name: SGT. JOHN PINNEY MEMORIAL POOL REPLACEMENT	Report Page:	(Page 7 of 9)
	Date Prepared:	20-11-2024

J. LIGHTING ALLOWANCE: PER APPLICATION

This table includes areas using the wattage allowance per application from Table 140.7-B / Table 170.2-S.

01	02	03	04	05	06	07	08	09	10
Area Description	Application per Table 140.7-B[1]	CALCULATED ALLOWANCE (Watts)			DESIGN WATTS				Additional Allowance (Watts)
		# of Locations	Allowance per Location[2]	Extra Allowance (Watts)	Luminaire Name or Item Tag	Watts per Luminaire	# of Luminaires	Design Watts	
Building Entrance	Building Entrance/Exit	1	15	15	B1	8.8	2	17.6	15
							Total Design Watts for this Area:	17.6	
							Total Allowance (Watts) All Areas:		15

[1] FOOTNOTES: Primary entrance applications are only available for senior care facilities, healthcare facilities, police stations, hospitals, fire stations, and emergency vehicle facilities.
[2] The Allowance per Location for ATMs is 100W for the first ATM and 35W for each additional per Table 140.7-B /Table 170.2-S.
[3] For luminaires indicated in Table F as linear, wattage in column 07 is W/lf instead of Watts/luminaire. Total linear feet should be indicated in column 08 instead of number of luminaires.

K. LIGHTING ALLOWANCE: SALES FRONTAGE

This section does not apply to this project.

L. LIGHTING ALLOWANCE: ORNAMENTAL

This section does not apply to this project.

M. LIGHTING ALLOWANCE: PER SPECIFIC AREA

This section does not apply to this project.

N. EXISTING CONDITIONS POWER ALLOWANCE (alterations only)

This section does not apply to this project.

Generated Date/Time: Documentation Software: EnergyPro
CA Building Energy Efficiency Standards - 2022 Nonresidential Compliance Report Version: 2022.0.000 Schema Version: rev 20220101 Compliance ID: EnergyPro-5468-1124-1748 Report Generated: 2024-11-19 22:23:48

STATE OF CALIFORNIA
Outdoor Lighting CALIFORNIA ENERGY COMMISSION

CERTIFICATE OF COMPLIANCE		NRCC-LTO-E
Project Name: SGT. JOHN PINNEY MEMORIAL POOL REPLACEMENT	Report Page:	(Page 8 of 9)
	Date Prepared:	20-11-2024

O. DECLARATION OF REQUIRED CERTIFICATES OF INSTALLATION

Selections have been made based on information provided in this document. If any selection has been changed by permit applicant, an explanation should be included in Table E. Additional Remarks. These documents must be provided to the building inspector during construction and can be found online

Form/Title
NRCI-LTO-E - Must be submitted for all buildings

P. DECLARATION OF REQUIRED CERTIFICATES OF ACCEPTANCE

Selections have been made based on information provided in this document. If any selection has been changed by permit applicant, an explanation should be included in Table E. Additional Remarks. These documents must be provided to the building inspector during construction and must be completed through an Acceptance Test Technician Certification Provider (ATTCP). For more information visit: http://www.energy.ca.gov/title24/attcp/providers.html

Form/Title	Systems/Spaces To Be Field Verified
NRCA-LTO-02-A - Must be submitted for all outdoor lighting controls except for alterations where controls are added to <= 20 luminaires.	Building Exterior Lighting; Building Entrance; Parking Lot; Exterior Sitting Area; Pool Deck Lighting;

Generated Date/Time: Documentation Software: EnergyPro
CA Building Energy Efficiency Standards - 2022 Nonresidential Compliance Report Version: 2022.0.000 Schema Version: rev 20220101 Compliance ID: EnergyPro-5468-1124-1748 Report Generated: 2024-11-19 22:23:48

STATE OF CALIFORNIA
Outdoor Lighting CALIFORNIA ENERGY COMMISSION

CERTIFICATE OF COMPLIANCE		NRCC-LTO-E
Project Name: SGT. JOHN PINNEY MEMORIAL POOL REPLACEMENT	Report Page:	(Page 9 of 9)
Project Address: 205 S WARNER ST	Date Prepared:	20-11-2024

DOCUMENTATION AUTHOR'S DECLARATION STATEMENT	
I certify that this Certificate of Compliance documentation is accurate and complete.	
Documentation Author Name: Manan H. Christian	Documentation Author Signature:
Company: Budlong & Associates	Signature Date: 2024-11-20
Address: 400 W. Ventura Blvd Suite 240	CEA/ HERS Certification Identification (if applicable):
City/State/Zip: Camarillo CA 93010	Phone: (805) 987-4001
RESPONSIBLE PERSON'S DECLARATION STATEMENT	
I certify the following under penalty of perjury, under the laws of the State of California: 1. The information provided on this Certificate of Compliance is true and correct. 2. I am eligible under Division 3 of the Business and Professions Code to accept responsibility for the building design or system design identified on this Certificate of Compliance (responsible designer) 3. The energy features and performance specifications, materials, components, and manufactured devices for the building design or system design identified on this Certificate of Compliance conform to the requirements of Title 24, Part 1 and Part 6 of the California Code of Regulations. 4. The building design features or system design features identified on this Certificate of Compliance are consistent with the information provided on other applicable compliance documents, worksheets, calculations, plans and specifications submitted to the enforcement agency for approval with this building permit application. 5. I will ensure that a completed signed copy of this Certificate of Compliance shall be made available with the building permit(s) issued for the building, and made available to the enforcement agency for all applicable inspections. I understand that a completed signed copy of this Certificate of Compliance is required to be included with the documentation the builder provides to the building owner at occupancy.	
Responsible Designer Name: Manan H. Christian	Responsible Designer Signature:
Company: Budlong & Associates	Date Signed: 2024-11-20
Address: 400 W. Ventura Blvd Suite 240	License: E 22864
City/State/Zip: Camarillo CA 93010	Phone: (805) 987-4001

Generated Date/Time: Documentation Software: EnergyPro
CA Building Energy Efficiency Standards - 2022 Nonresidential Compliance Report Version: 2022.0.000 Schema Version: rev 20220101 Compliance ID: EnergyPro-5468-1124-1748 Report Generated: 2024-11-19 22:23:48

AGENCY

REVIEWED FOR CODE COMPLIANCE BY: WILLDAN ENGINEERING
Approval of these plans & specifications shall not be construed to be a permit for, or an approval of any violation of any Federal, State, County or City laws or ordinances. One set of approved plans must be kept on the job until completion.
10:06:55 AM Jul 21, 2025

FLEWELLING & MOODY
architecture planning interiors

HEADQUARTERS OFFICE:
99 S. Lake Avenue, Suite 300
Pasadena, CA 91101
Phone: 323.543.8300
E-Mail: fm-pasadena@flewelling-moody.com

ANTELOPE VALLEY OFFICE:
1035 West Lancaster Boulvard
Lancaster, California 93534
Phone: 661.949.0771
E-Mail: fm-lancaster@flewelling-moody.com

An Employee Owned Corporation

ARCHITECT

CONSULTANT

Budlong
An MBE|SBE|DBE|LSBE Firm
Glendale|Downtown LA|Fremont|Camarillo
W W W . B U D L O N G . C O M
Job No. 23-140

REGISTERED PROFESSIONAL ENGINEER MANAN H. CHRISTIAN E 22864 11/30/25 ELECTRICAL STATE OF CALIFORNIA

Drawn by: Author
Check by: Checker

Revisions

No.	Date	Description
	01/26/24	100% DD
	03/01/24	50% CD
	05/09/24	90% CD
	08/05/24	100% CD
	11/25/24	100% CD V2
	01/31/25	100% CD V3

All dimensions must be checked at the job by the contractor who accepts full responsibility for their accuracy under the contract. These plans & the specifications in connection therewith have been prepared for a specific site. Any and all responsibility for their use in whole or in part on any other site is hereby disclaimed by Flewelling & Moody.

CITY OF RIDGECREST

SGT. JOHN PINNEY MEMORIAL POOL REPLACEMENT

205 S WARNER ST, RIDGECREST, CA 93555

Drawing Title

ELECTRICAL T-24 FORMS - OUTDOOR (COMMUNITY BUILDING)

Job No. 3055-0100
Date 05/09/2025
Sheet No. **E7.02**

STATE OF CALIFORNIA
Outdoor Lighting CALIFORNIA ENERGY COMMISSION

CERTIFICATE OF COMPLIANCE		NRCC-LTO-E
Project Name: SGT. JOHN PINNEY MEMORIAL POOL REPLACEMENT	Report Page:	(Page 1 of 9)
Project Address: 205 S WARNER ST	Date Prepared:	10-07-2025

This document is used to demonstrate compliance with requirements in 110.9, 130.0, 130.2, 140.7, and 141.0(b)2I, for outdoor lighting scopes using the prescriptive path for nonresidential and hotel/motel occupancies. It is also used to document compliance with requirements in 160.5, 170.2(e)6, 180.1(a) and 180.2(b)4iBv for outdoor lighting scopes using the prescriptive path for multifamily and mixed-use occupancies. Multifamily includes dormitory and senior living facilities.

A. GENERAL INFORMATION

01	Project Location (city)	RIDGECREST	04	Total Illuminated Hardscape Area (ft^2)	16198
02	Climate Zone	14			

03 Outdoor Lighting Zone per Title 24 Part 1 10.114 or as designated by Authority Having Jurisdiction (AHJ):

☐ LZ-0: Very Low - Undeveloped Parkland ☒ LZ-2: Moderate - Urban Clusters ☐ LZ-4: High - Must be reviewed by CA Energy Commission for Approval

☐ LZ-1: Low - Rural Areas ☐ LZ-3: Moderately High - Urban Areas

05 Occupancy Types within Project

● Office ● Support Areas ● Warehouse ● All Other Occupancies

B. PROJECT SCOPE

This table includes outdoor lighting systems that are within the scope of the permit application and are demonstrating compliance using the prescriptive path outlined in 140.7 / 170.2(e)6 or 141.0(b)2I. / 180.2(b)4Bv for alterations.

My Project Consists of:

01	02			
☒ New Lighting System	Must Comply with Allowances from 140.7 / 170.2(e)6			
☐ Altered Lighting System	Is your alteration increasing the connected lighting load (Watts)?		○ Yes	○ No
03	04		05	
% of Existing Luminaires Being Altered[1]	Sum Total of Luminaires Being Added or Altered		Calculation Method	
☐ < 10% ☐ >= 10% and < 50% ☐ >= 50%				

Please proceed to Table F. Outdoor Lighting Fixture Schedule to define the project's luminaires.

[1] FOOTNOTES: % of Existing Luminaires Being Altered = (Sum Total of Luminaires Being Added or Altered / Existing Luminaires within the Scope of the Permit Application) x 100.

Generated Date/Time: Documentation Software: EnergyPro

CA Building Energy Efficiency Standards - 2022 Nonresidential Compliance | Report Version: 2022.0.000 Schema Version: rev 20220101 | Compliance ID: EnergyPro-5468-0725-2428 Report Generated: 2025-07-10 04:31:09

STATE OF CALIFORNIA
Outdoor Lighting CALIFORNIA ENERGY COMMISSION

CERTIFICATE OF COMPLIANCE		NRCC-LTO-E
Project Name: SGT. JOHN PINNEY MEMORIAL POOL REPLACEMENT	Report Page:	(Page 2 of 9)
	Date Prepared:	10-07-2025

H. OUTDOOR LIGHTING CONTROLS

This table demonstrates compliance with controls requirements for all new or altered luminaires installed as part of the permit application. For alteration projects, luminaires which are existing to remain (ie untouched) and luminaires which are removed and reinstalled (wiring only) do not need to be included in this table even if they are within the spaces covered by the permit application.
Outdoor lighting for nonresidential buildings, parking garages and common service areas in multifamily buildings must be documented separately from outdoor lighting attached to multifamily buildings and controlled from the inside of a dwelling unit

Mandatory Controls for Nonresidential Occupancies, Parking Garages & Common Areas in Multifamily Buildings

01	02	03	04	05	
Area Description	Shut-Off 130.2(c)1 / 160.5(c)	Auto-Schedule 130.2(c)2 / 160.5(c)	Motion Sensor 130.2(c)3 / 160.5(c)	Field Inspector	
				Pass	Fail
Building Exterior Lighting	Astronomical Timer	Provided	NA: Each Luminaire <= 40 Watts	☐	☐
Building Entrance	Astronomical Timer	Provided	NA: Each Luminaire <= 40 Watts	☐	☐
Parking Lot	Astronomical Timer	Provided	NA: Each Luminaire <= 40 Watts	☐	☐
Exterior Sitting Area	Astronomical Timer	Provided	NA: Each Luminaire <= 40 Watts	☐	☐
Pool Deck Lighting	Astronomical Timer	Provided	NA: Each Luminaire <= 40 Watts	☐	☐

[1] FOOTNOTE: Text has been abbreviated, please refer to Table 160.5-A to confirm compliance with the specific light source technologies listed.
[2] Authority having jurisdiction may ask for cutsheets or other documentation to confirm compliance of light source.
[3] Recessed luminaires marked for use in fire-rated installations, and recessed luminaires installed in non-insulated ceilings are exempt from ii and iii.

Generated Date/Time: Documentation Software: EnergyPro

CA Building Energy Efficiency Standards - 2022 Nonresidential Compliance | Report Version: 2022.0.000 Schema Version: rev 20220101 | Compliance ID: EnergyPro-5468-0725-2428 Report Generated: 2025-07-10 04:31:09

STATE OF CALIFORNIA
Outdoor Lighting CALIFORNIA ENERGY COMMISSION

CERTIFICATE OF COMPLIANCE		NRCC-LTO-E
Project Name: SGT. JOHN PINNEY MEMORIAL POOL REPLACEMENT	Report Page:	(Page 3 of 9)
	Date Prepared:	10-07-2025

I. LIGHTING POWER ALLOWANCE (per 140.7 / 170.2(e))

This table includes areas using allowance calculations per 140.7 / 170.2(e). General Hardscape Allowance is per Table 140.7-A/Table 170.2-R while "Use it or lose it" Allowances are per Table 140.7-B /Table 170.2-S. Indicate which allowances are being used to expand sections for user input. Luminaires that qualify for one of the "Use it or lose it" allowances shall not qualify for another "Use it or lose it" allowance.
Outdoor lighting attached to multifamily buildings and controlled from the inside of a dwelling unit are included in Table H, and are not included here. All other multifamily outdoor lighting is included here.

01					
	"Use it or lose it" Allowance (select all that apply) (select all that apply)				
☒ General Hardscape Allowance Table I (below)	☒ Per Application Table J	☐ Sales Frontage Table K	☐ Ornamental Table L	☐ Per Specific Area Table M	

Calculated General Hardscape Lighting Power Allowance per Table 140.7-A for Nonresidential & Hotel/Motel

02	03	04	05	06	07	08	09
Area Description	Area Wattage Allowance (AWA)			Linear Wattage Allowance (LWA)			Total General AWA + LWA (Watts)
	Illuminated Area (ft^2)	Allowed Density (W/ft^2)	Area Allowance (Watts)	Perimeter Length (lf)	Allowed Density (W/lf)	Linear Allowance (Watts)	
Bulding Exterior Lighting	2862	0.019	54.4	632	0.2	94.8	149
Parking Lot	28011	0.019	532.2	1044	0.2	156.6	689
EXTERIOR SITTING AREA	1011	0.019	19.2	133	0.2	20	39
POOL DECK LIGHTING	34314	0.019	652	811	0.2	121.6	774
				Initial Wattage Allowance for Entire Site (Watts):			200
				Instances of Initial Wattage Allowance (LZ 0 only)[1]			
				Total General Hardscape Allowance (Watts):			1851

Generated Date/Time: Documentation Software: EnergyPro

CA Building Energy Efficiency Standards - 2022 Nonresidential Compliance | Report Version: 2022.0.000 Schema Version: rev 20220101 | Compliance ID: EnergyPro-5468-0725-2428 Report Generated: 2025-07-10 04:31:09

STATE OF CALIFORNIA
Outdoor Lighting CALIFORNIA ENERGY COMMISSION

CERTIFICATE OF COMPLIANCE		NRCC-LTO-E
Project Name: SGT. JOHN PINNEY MEMORIAL POOL REPLACEMENT	Report Page:	(Page 9 of 9)
Project Address: 205 S WARNER ST	Date Prepared:	10-07-2025

DOCUMENTATION AUTHOR'S DECLARATION STATEMENT

I certify that this Certificate of Compliance documentation is accurate and complete.

Documentation Author Name: Manan H. Christian	Documentation Author Signature:
Company: Budlong & Associates	Signature Date: 2025-07-10
Address: 400 W. Ventura Blvd Suite 240	CEA/ HERS Certification Identification (if applicable): Budlong & Associates
City/State/Zip: Camarillo CA 93010	Phone: (805) 987-4001

RESPONSIBLE PERSON'S DECLARATION STATEMENT

I certify the following under penalty of perjury, under the laws of the State of California:

1. The information provided on this Certificate of Compliance is true and correct.
2. I am eligible under Division 3 of the Business and Professions Code to accept responsibility for the building design or system design identified on this Certificate of Compliance (responsible designer)
3. The energy features and performance specifications, materials, components, and manufactured devices for the building design or system design identified on this Certificate of Compliance conform to the requirements of Title 24, Part 1 and Part 6 of the California Code of Regulations.
4. The building design features or system design features identified on this Certificate of Compliance are consistent with the information provided on other applicable compliance documents, worksheets, calculations, plans and specifications submitted to the enforcement agency for approval with this building permit application.
5. I will ensure that a completed signed copy of this Certificate of Compliance shall be made available with the building permit(s) issued for the building, and made available to the enforcement agency for all applicable inspections. I understand that a completed signed copy of this Certificate of Compliance is required to be included with the documentation the builder provides to the building owner at occupancy.

Responsible Designer Name: Manan H. Christian	Responsible Designer Signature:
Company: Budlong & Associates	Date Signed: 2025-07-10
Address: 400 W. Ventura Blvd Suite 240	License: E 22864
City/State/Zip: Camarillo CA 93010	Phone: (805) 987-4001

Generated Date/Time: Documentation Software: EnergyPro

CA Building Energy Efficiency Standards - 2022 Nonresidential Compliance | Report Version: 2022.0.000 Schema Version: rev 20220101 | Compliance ID: EnergyPro-5468-0725-2428 Report Generated: 2025-07-10 04:31:09

STATE OF CALIFORNIA
Outdoor Lighting CALIFORNIA ENERGY COMMISSION

CERTIFICATE OF COMPLIANCE		NRCC-LTO-E
Project Name: SGT. JOHN PINNEY MEMORIAL POOL REPLACEMENT	Report Page:	(Page 4 of 9)
	Date Prepared:	10-07-2025

C. COMPLIANCE RESULTS

Results in this table are automatically calculated from data input and calculations in Tables F through N. Note: if any cell on this table says "COMPLIES with Exceptional Conditions" refer to Table D. Exceptional Conditions for guidance or see applicable Table referenced below.

Calculations of Total Allowed Lighting Power (Watts) 140.7 / 170.2(e)6 or 141.0(b)2I. / 180.2(b)4Bv										Compliance Results		
01		02		03		04		05	06	07		08	09
General Hardscape Allowance 140.7(d)1 / 170.2(e)6 (See Table I)	+	Per Application 140.7(d)2 / 170.2(e)6 (See Table J)	+	Sales Frontage 140.7(d)2 (See Table K)	+	Ornamental 140.7(d)2 (See Table L)	+	Per Specific Area 140.7(d)2 / 170.2(e)6 (See Table M)	OR Existing Power Allowance 141.0(b)2I. / 180.2(b)4Bv (See Table N)	= **Total Allowed** (Watts)	≥	**Total Actual** (Watts)	**07 must be >= 08**
1,851	+	15	+	---	+	---	+	---	OR ---	= 1,866	≥	1,034	COMPLIES
Shielding Compliance (See Table G for Details)													N/A
Controls Compliance (See Table H for Details)													COMPLIES

D. EXCEPTIONAL CONDITIONS

This table is auto-filled with uneditable comments because of selections made or data entered in tables throughout the form.

E. ADDITIONAL REMARKS

This table includes remarks made by the permit applicant to the Authority Having Jurisdiction.

Generated Date/Time: Documentation Software: EnergyPro

CA Building Energy Efficiency Standards - 2022 Nonresidential Compliance | Report Version: 2022.0.000 Schema Version: rev 20220101 | Compliance ID: EnergyPro-5468-0725-2428 Report Generated: 2025-07-10 04:31:09

STATE OF CALIFORNIA
Outdoor Lighting CALIFORNIA ENERGY COMMISSION

CERTIFICATE OF COMPLIANCE		NRCC-LTO-E
Project Name: SGT. JOHN PINNEY MEMORIAL POOL REPLACEMENT	Report Page:	(Page 5 of 9)
	Date Prepared:	10-07-2025

F. OUTDOOR LIGHTING FIXTURE SCHEDULE

For new or altered lighting systems demonstrating compliance with 140.7 / 170.2(e)6 all new luminaires being installed and any existing luminaires remaining or being moved within the spaces covered by the permit application are included in the Table below. For altered lighting systems using the Existing Power method per 141.0(b)2I. only new luminaires being installed and replacement luminaires being installed as part of the project scope are included (ie, existing luminaires remaining or existing luminaires being moved are not included). Outdoor lighting attached to multifamily buildings and controlled from the inside of a dwelling unit are included in Table H, and are not included here. All other multifamily outdoor lighting is included here.

Designed Wattage:

01	02	03	04	05	06	07	08	09	10	
Name or Item Tag	Complete Luminaire Description		Watts per luminaire* [1]	How is Wattage determined	Total Number Luminaires *	Luminaire Status[2]	Excluded per 140.7(a) / 170.2(e)6A	Design Watts	Cutoff Req. > 6,200 initial lumen output 130.2(b) / 160.5(c)1[3]	Field Inspector	
										Pass	Fail
B1	B1- 6" Recessed downlight	☐ Linear	8.8	Mfr. Spec	2	New	☐	17.6	NA: < 6200 lumens	☐	☐
F	F - Wallpack LED Fixture	☐ Linear	35	Mfr. Spec	10	New	☐	350	NA: < 6200 lumens	☐	☐
H1	H1 - Wall Mount Cylindrical Fixture	☐ Linear	26	Mfr. Spec	2	New	☐	52	NA: < 6200 lumens	☐	☐
I	I- BOLLARD	☐ Linear	11	Mfr. Spec	1	New	☐	11	NA: < 6200 lumens	☐	☐
J	J-BOLLARD	☐ Linear	36	Mfr. Spec	3	New	☐	108	NA: < 6200 lumens	☐	☐
S1	S1-Parking Pole Light	☐ Linear	33	Mfr. Spec	13	New	☐	429	NA: < 6200 lumens	☐	☐
S2	S2-Parking Pole Light	☐ Linear	33	Mfr. Spec	2	New	☐	66	NA: < 6200 lumens	☐	☐
							Total Design Watts:	1034			

** NOTES: Selections with a * require a note in the space below explaining how compliance is achieved.*
EX: Luminaire is lighting a statue; EXCEPTION 2 to 130.2(b)

[1] FOOTNOTES: Authority Having Jurisdiction may ask for luminaire cut sheets to confirm wattage used for compliance per 130.0(c) / 160.5(b)
[2] For linear luminaires, wattage should be indicated as W/lf instead of Watts/luminaire. Total linear feet should be indicated in column O5 instead of number of luminaires.

Generated Date/Time: Documentation Software: EnergyPro

CA Building Energy Efficiency Standards - 2022 Nonresidential Compliance | Report Version: 2022.0.000 Schema Version: rev 20220101 | Compliance ID: EnergyPro-5468-0725-2428 Report Generated: 2025-07-10 04:31:09

STATE OF CALIFORNIA
Outdoor Lighting CALIFORNIA ENERGY COMMISSION

CERTIFICATE OF COMPLIANCE		NRCC-LTO-E
Project Name: SGT. JOHN PINNEY MEMORIAL POOL REPLACEMENT	Report Page:	(Page 6 of 9)
	Date Prepared:	10-07-2025

J. LIGHTING ALLOWANCE: PER APPLICATION

This table includes areas using the wattage allowance per application from Table 140.7-B / Table 170.2-S.

01	02	03	04	05	06	07	08	09	10
Area Description	Application per Table 140.7-B[1]	CALCULATED ALLOWANCE (Watts)			DESIGN WATTS				Additional Allowance (Watts)
		# of Locations	Allowance per Location[2]	Extra Allowance (Watts)	Luminaire Name or Item Tag	Watts per Luminaire	# of Luminaires	Design Watts	
Building Enterance	Building Entrance/Exit	1	15	15	B1	8.8	2	17.6	15
					Total Design Watts for this Area:			17.6	
					Total Allowance (Watts) All Areas:				15

[1] FOOTNOTES: Primary entrance applications are only available for senior care facilities, healthcare facilities, police stations, hospitals, fire stations, and emergency vehicle facilities.
[2] The Allowance per Location for ATMs is 100W for the first ATM and 35W for each additional per Table 140.7-B / Table 170.2-S.
[3] For luminaires indicated in Table F as linear, wattage in column O7 is W/lf instead of Watts/luminaire. Total linear feet should be indicated in column O8 instead of number of luminaires.

K. LIGHTING ALLOWANCE: SALES FRONTAGE

This section does not apply to this project.

L. LIGHTING ALLOWANCE: ORNAMENTAL

This section does not apply to this project.

M. LIGHTING ALLOWANCE: PER SPECIFIC AREA

This section does not apply to this project.

N. EXISTING CONDITIONS POWER ALLOWANCE (alterations only)

This section does not apply to this project.

Generated Date/Time: Documentation Software: EnergyPro

CA Building Energy Efficiency Standards - 2022 Nonresidential Compliance | Report Version: 2022.0.000 Schema Version: rev 20220101 | Compliance ID: EnergyPro-5468-0725-2428 Report Generated: 2025-07-10 04:31:09

STATE OF CALIFORNIA
Outdoor Lighting CALIFORNIA ENERGY COMMISSION

CERTIFICATE OF COMPLIANCE		NRCC-LTO-E
Project Name: SGT. JOHN PINNEY MEMORIAL POOL REPLACEMENT	Report Page:	(Page 7 of 9)
	Date Prepared:	10-07-2025

F. OUTDOOR LIGHTING FIXTURE SCHEDULE

For new or altered lighting systems demonstrating compliance with 140.7 / 170.2(e)6 all new luminaires being installed and any existing luminaires remaining or being moved within the spaces covered by the permit application are included in the Table below. For altered lighting systems using the Existing Power method per 141.0(b)2I. only new luminaires being installed and replacement luminaires being installed as part of the project scope are included (ie, existing luminaires remaining or existing luminaires being moved are not included). Outdoor lighting attached to multifamily buildings and controlled from the inside of a dwelling unit are included in Table H, and are not included here. All other multifamily outdoor lighting is included here.

Designed Wattage:

01	02	03	04	05	06	07	08	09	10	
Name or Item Tag	Complete Luminaire Description		Watts per luminaire* [1]	How is Wattage determined	Total Number Luminaires *	Luminaire Status[2]	Excluded per 140.7(a) / 170.2(e)6A	Design Watts	Cutoff Req. > 6,200 initial lumen output 130.2(b) / 160.5(c)1[3]	Field Inspector	
										Pass	Fail
B1	B1- 6" Recessed downlight	☐ Linear	8.8	Mfr. Spec	2	New	☐	17.6	NA: < 6200 lumens	☐	☐
F	F - Wallpack LED Fixture	☐ Linear	35	Mfr. Spec	10	New	☐	350	NA: < 6200 lumens	☐	☐
H1	H1 - Wall Mount Cylindrical Fixture	☐ Linear	26	Mfr. Spec	2	New	☐	52	NA: < 6200 lumens	☐	☐
I	I- BOLLARD	☐ Linear	11	Mfr. Spec	1	New	☐	11	NA: < 6200 lumens	☐	☐
J	J-BOLLARD	☐ Linear	36	Mfr. Spec	3	New	☐	108	NA: < 6200 lumens	☐	☐
S1	S1-Parking Pole Light	☐ Linear	33	Mfr. Spec	13	New	☐	429	NA: < 6200 lumens	☐	☐
S2	S2-Parking Pole Light	☐ Linear	33	Mfr. Spec	2	New	☐	66	NA: < 6200 lumens	☐	☐
							Total Design Watts:	1034			

** NOTES: Selections with a * require a note in the space below explaining how compliance is achieved.*
EX: Luminaire is lighting a statue; EXCEPTION 2 to 130.2(b)

[1] FOOTNOTES: Authority Having Jurisdiction may ask for luminaire cut sheets to confirm wattage used for compliance per 130.0(c) / 160.5(b)
[2] For linear luminaires, wattage should be indicated as W/lf instead of Watts/luminaire. Total linear feet should be indicated in column O5 instead of number of luminaires.

Generated Date/Time: Documentation Software: EnergyPro

CA Building Energy Efficiency Standards - 2022 Nonresidential Compliance | Report Version: 2022.0.000 Schema Version: rev 20220101 | Compliance ID: EnergyPro-5468-0725-2428 Report Generated: 2025-07-10 04:31:09

STATE OF CALIFORNIA
Outdoor Lighting CALIFORNIA ENERGY COMMISSION

CERTIFICATE OF COMPLIANCE		NRCC-LTO-E
Project Name: SGT. JOHN PINNEY MEMORIAL POOL REPLACEMENT	Report Page:	(Page 8 of 9)
	Date Prepared:	10-07-2025

G. SHIELDING REQUIREMENTS (BUG)

This section does not apply to this project.

O. DECLARATION OF REQUIRED CERTIFICATES OF INSTALLATION

Selections have been made based on information provided in this document. If any selection has been changed by permit applicant, an explanation should be included in Table E. Additional Remarks. These documents must be provided to the building inspector during construction and can be found online

Form/Title
NRCI-LTO-E - Must be submitted for all buildings

P. DECLARATION OF REQUIRED CERTIFICATES OF ACCEPTANCE

Selections have been made based on information provided in this document. If any selection has been changed by permit applicant, an explanation should be included in Table E. Additional Remarks. These documents must be provided to the building inspector during construction and must be completed through an Acceptance Test Technician Certification Provider (ATTCP). For more information visit: http://www.energy.ca.gov/title24/attcp/providers.html

Form/Title	Systems/Spaces To Be Field Verified
NRCA-LTO-02-A - Must be submitted for all outdoor lighting controls except for alterations where controls are added to <= 20 luminaires.	Building Exterior Lighting; Building Entrance; Parking Lot; Exterior Sitting Area; Pool Deck Lighting;

Generated Date/Time: Documentation Software: EnergyPro

CA Building Energy Efficiency Standards - 2022 Nonresidential Compliance | Report Version: 2022.0.000 Schema Version: rev 20220101 | Compliance ID: EnergyPro-5468-0725-2428 Report Generated: 2025-07-10 04:31:09

AGENCY

FLEWELLING & MOODY
architecture planning interiors

HEADQUARTERS OFFICE:
99 S. Lake Avenue, Suite 300
Pasadena, CA 91101
Phone: 323.543.8300
E-Mail: fm-pasadena@flewelling-moody.com

ANTELOPE VALLEY OFFICE:
1035 West Lancaster Boulvard
Lancaster, California 93534
Phone: 661.949.0771
E-Mail: fm-lancaster@flewelling-moody.com

An Employee Owned Corporation

ARCHITECT

CONSULTANT

Budlong
An MBE|SBE|DBE|LSBE Firm
Glendale|Downtown LA|Fremont|Camarillo
W W W . B U D L O N G . C O M
Job No. 23-140

REGISTERED PROFESSIONAL ENGINEER
MANAN H. CHRISTIAN
No. E 22864
ELECTRICAL
STATE OF CALIFORNIA

Drawn by: Author
Check by: Checker

Revisions

No.	Date	Description
1	08/27/2025	BID ALTERNATE

All dimensions must be checked at the job by the contractor who accepts full responsibility for their accuracy under the contract. These plans & the specifications in connection therewith have been prepared for a specific site. Any and all responsibility for their use in whole or in part on any other site is hereby disclaimed by Flewelling & Moody.

CITY OF RIDGECREST

SGT. JOHN PINNEY MEMORIAL POOL REPLACEMENT

205 S WARNER ST, RIDGECREST, CA 93555

Drawing Title

ELECTRICAL T-24 FORMS - OUTDOOR (COMMUNITY BUILDING) ALT 3

Job No. 3055-0000
Date 08/07/2024
Sheet No. **E7.02A3**

STATE OF CALIFORNIA
Outdoor Lighting
CALIFORNIA ENERGY COMMISSION

CERTIFICATE OF COMPLIANCE		NRCC-LTO-E
Project Name: SGT. JOHN PINNEY MEMORIAL POOL REPLACEMENT	Report Page:	(Page 1 of 9)
Project Address: 205 S WARNER ST	Date Prepared:	10-07-2025

This document is used to demonstrate compliance with requirements in 110.9, 130.0, 130.2, 140.7, and 141.0(b)2), for outdoor lighting scopes using the prescriptive path for nonresidential and hotel/motel occupancies. It is also used to document compliance with requirements in 160.5, 170.2(e)6, 180.1(a) and 180.2(b)4Bv for outdoor lighting scopes using the prescriptive path for multifamily and mixed-use occupancies. Multifamily includes dormitory and senior living facilities.

A. GENERAL INFORMATION

01	Project Location (city)	RIDGECREST	04	Total Illuminated Hardscape Area (ft²)	68604
02	Climate Zone	14			
03	Outdoor Lighting Zone per Title 24 Part 1	10.114 or as designated by Authority Having Jurisdiction (AHJ):			

☐ LZ-0: Very Low - Undeveloped Parklland ☒ LZ-2: Moderate - Urban Clusters ☐ LZ-4: High - Must be reviewed by CA Energy Commission for Approval
☐ LZ-1: Low - Rural Areas ☐ LZ-3: Moderately High - Urban Areas

05 Occupancy Types within Project

● Office ● Support Areas ● Warehouse ● All Other Occupancies

B. PROJECT SCOPE

This table includes outdoor lighting systems that are within the scope of the permit application and are demonstrating compliance using the prescriptive path outlined in 140.7 / 170.2(e)6 or 141.0(b)2I. / 180.2(b)4Bv for alterations.

My Project Consists of:

01	02
☒ New Lighting System	Must Comply with Allowances from 140.7 / 170.2(e)6
☐ Altered Lighting System	Is your alteration increasing the connected lighting load (Watts)? ○ Yes ○ No

03	04	05
	% of Existing Luminaires Being Altered[1]	Sum Total of Luminaires Being Added or Altered	Calculation Method
☐ < 10% ☐ >= 10% and < 50% ☐ >= 50%		

Please proceed to Table F, Outdoor Lighting Fixture Schedule to define the project's luminaires.

[1 FOOTNOTES: % of Existing Luminaires Being Altered = (Sum Total of Luminaires Being Added or Altered / Existing Luminaires within the Scope of the Permit Application) x 100.

STATE OF CALIFORNIA
Outdoor Lighting
CALIFORNIA ENERGY COMMISSION
CERTIFICATE OF COMPLIANCE NRCC-LTO-E
Project Name: SGT. JOHN PINNEY MEMORIAL POOL REPLACEMENT Report Page: (Page 2 of 9)
Date Prepared: 10-07-2025

C. COMPLIANCE RESULTS

Results in this table are automatically calculated from data input and calculations in Tables F through N. Note: if any cell on this table says "COMPLIES with Exceptional Conditions" refer to Table D. Exceptional Conditions for guidance or see applicable Table referenced below.

Calculations of Total Allowed Lighting Power (Watts) 140.7 / 170.2(e)6i or 141.0(b)2I. / 180.2(b)4Bv												Compliance Results		
01		02		03		04		05		06		07		08	09
General Hardscape Allowance 140.7(d)1 / 170.2(e)6i (See Table I)	+	Per Application 140.7(d)2 / 170.2(e)6i (See Table J)	+	Sales Frontage 140.7(d)2 (See Table K)	+	Ornamental 140.7(d)2 / 170.2(e)6i (See Table L)	+	Per Specific Area 140.7(d)2 / 170.2(e)6i (See Table M)	OR	Existing Power Allowance 141.0(b)2L / 180.2(b)4Bv (See Table N)	=	**Total Allowed** (Watts)	≥	**Total Actual** (Watts)	**07 must be >= 08**
1,912	+	15	+	---	+	---	+	---	OR	---	+	1,927	≥	1,076	COMPLIES

Shielding Compliance (See Table G for Details)	N/A
Controls Compliance (See Table H for Details)	COMPLIES

D. EXCEPTIONAL CONDITIONS

This table is auto-filled with uneditable comments because of selections made or data entered in tables throughout the form.

E. ADDITIONAL REMARKS

This table includes remarks made by the permit applicant to the Authority Having Jurisdiction.

STATE OF CALIFORNIA
Outdoor Lighting
CALIFORNIA ENERGY COMMISSION
CERTIFICATE OF COMPLIANCE NRCC-LTO-E
Project Name: SGT. JOHN PINNEY MEMORIAL POOL REPLACEMENT Report Page: (Page 3 of 9)
Date Prepared: 10-07-2025

F. OUTDOOR LIGHTING FIXTURE SCHEDULE

For new or altered lighting systems demonstrating compliance with 140.7 / 170.2(e)6 all new luminaires being installed and any existing luminaires remaining or being moved within the spaces covered by the permit application are included in the Table below. For altered lighting systems using the Existing Power method per 141.0(b)2I. only new luminaires being installed and replacement luminaires being installed as part of the project scope are included (ie, existing luminaires remaining or existing luminaires being moved are not included). Outdoor lighting attached to multifamily buildings and controlled from the inside of a dwelling unit are included in Table H, and are not included here. All other multifamily outdoor lighting is included here.

Designed Wattage:

01	02	03	04	05	06	07	08	09	10	
Name or Item Tag	Complete Luminaire Description		Watts per luminaire[2, 3]	How is Wattage determined	Total Number Luminaires [3]	Luminaire Status[3]	Excluded per 140.7(a) / 170.2(e)6A	Design Watts	Cutoff Req. > 6,200 initial lumen output 130.2(b) / 160.5(c)1[4]	Field Inspector: Pass	Field Inspector: Fail
B1	B1- 6" Recessed downlight	☐ Linear	8.8	Mfr. Spec	5	New	☐	44	NA; < 6200 lumens	☐	☐
F	F - Wallpack LED Fixture	☐ Linear	35	Mfr. Spec	12	New	☐	420	NA; < 6200 lumens	☐	☐
H2	H2 - Wall Mount Cylindrical Fixture	☐ Linear	14	Mfr. Spec	6	New	☐	84	NA; < 6200 lumens	☐	☐
I	I- BOLLARD	☐ Linear	11	Mfr. Spec	3	New	☐	33	NA; < 6200 lumens	☐	☐
S1	S1-Parking Pole Light	☐ Linear	33	Mfr. Spec	13	New	☐	429	NA; < 6200 lumens	☐	☐
S2	S2-Parking Pole Light	☐ Linear	33	Mfr. Spec	2	New	☐	66	NA; < 6200 lumens	☐	☐
						Total Design Watts:		1076			

* NOTES: Selections with a * require a note in the space below explaining how compliance is achieved.
EX: Luminaire is lighting a statue; EXCEPTION 2 to 130.2(b)

[1 FOOTNOTES: Authority Having Jurisdiction may ask for Luminaire cut sheets to confirm wattage used for compliance per 130.0(c) / 160.5(b)
[2 For linear luminaires, wattage should be indicated as W/ft instead of Watts/luminaire. Total linear feet should be indicated in column 05 instead of number of luminaires.
[3 Select "New" for new luminaires in a new outdoor lighting project, or for added luminaires in an alteration. Select "Altered" for replacement luminaires in an alteration. Select "Existing to Remain" for existing luminaires within the project scope that are not being altered and are remaining. Select "Existing Reinstalled" for existing luminaires which are being removed and reinstalled as part of the project scope.

STATE OF CALIFORNIA
Outdoor Lighting
CALIFORNIA ENERGY COMMISSION
CERTIFICATE OF COMPLIANCE NRCC-LTO-E
Project Name: SGT. JOHN PINNEY MEMORIAL POOL REPLACEMENT Report Page: (Page 4 of 9)
Date Prepared: 10-07-2025

F. OUTDOOR LIGHTING FIXTURE SCHEDULE

For new or altered lighting systems demonstrating compliance with 140.7 / 170.2(e)6 all new luminaires being installed and any existing luminaires remaining or being moved within the spaces covered by the permit application are included in the Table below. For altered lighting systems using the Existing Power method per 141.0(b)2I. only new luminaires being installed and replacement luminaires being installed as part of the project scope are included (ie, existing luminaires remaining or existing luminaires being moved are not included). Outdoor lighting attached to multifamily buildings and controlled from the inside of a dwelling unit are included in Table H, and are not included here. All other multifamily outdoor lighting is included here.

Designed Wattage:

01	02	03	04	05	06	07	08	09	10

** Compliance with mandatory shielding requirements is required for luminaires with initial lumen output >= 6,200 unless exempted by 130.2(b)/ 160.5(c)*

G. SHIELDING REQUIREMENTS (BUG)

This section does not apply to this project.

STATE OF CALIFORNIA
Outdoor Lighting
CALIFORNIA ENERGY COMMISSION
CERTIFICATE OF COMPLIANCE NRCC-LTO-E
Project Name: SGT. JOHN PINNEY MEMORIAL POOL REPLACEMENT Report Page: (Page 5 of 9)
Date Prepared: 10-07-2025

H. OUTDOOR LIGHTING CONTROLS

This table demonstrates compliance with controls requirements for all new or altered luminaires installed as part of the permit application. For alteration projects, luminaires which are existing to remain (ie untouched) and luminaires which are removed and reinstalled (wiring only) do not need to be included in this table even if they are within the spaces covered by the permit application.
Outdoor lighting for nonresidential buildings, parking garages and common service areas in multifamily buildings must be documented separately from outdoor lighting attached to multifamily buildings and controlled from the inside of a dwelling unit

Mandatory Controls for Nonresidential Occupancies, Parking Garages & Common Areas in Multifamily Buildings

01	02	03	04	05	
Area Description	Shut-Off 130.2(c)1 / 160.5(c)	Auto-Schedule 130.2(c)2 / 160.5(c)	Motion Sensor 130.2(c)3 / 160.5(c)	Field Inspector: Pass	Field Inspector: Fail
Building Exteior Lighting	Astronomical Timer	Provided	NA; Each Luminaire <= 40 Watts	☐	☐
Building Entrance	Astronomical Timer	Provided	NA; Each Luminaire <= 40 Watts	☐	☐
Parking Lot	Astronomical Timer	Provided	NA; Each Luminaire <= 40 Watts	☐	☐
Exterior Sitting Area	Astronomical Timer	Provided	NA; Each Luminaire <= 40 Watts	☐	☐
Pool Deck Lighting	Astronomical Timer	Provided	NA; Each Luminaire <= 40 Watts	☐	☐
EXIT TO PARKING LIGHTING	Astronomical Timer	Provided	NA; Each Luminaire <= 40 Watts	☐	☐

[1 FOOTNOTE: Tnvi has been abbreviated, please refer to Table 160.5-A to confirm compliance with the specific light source technologies listed.
[2 Authority having jurisdiction may ask for cutsheets or other documentation to confirm compliance of light source.
[3 Recessed luminaires marked for use in fire-rated installations, and recessed luminaires installed in non-insulated ceilings are excepted from ii and iii.

STATE OF CALIFORNIA
Outdoor Lighting
CALIFORNIA ENERGY COMMISSION
CERTIFICATE OF COMPLIANCE NRCC-LTO-E
Project Name: SGT. JOHN PINNEY MEMORIAL POOL REPLACEMENT Report Page: (Page 6 of 9)
Date Prepared: 10-07-2025

I. LIGHTING POWER ALLOWANCE (per 140.7 / 170.2(e))

This table includes areas using allowance calculations per 140.7 / 170.2(e). General Hardscape Allowance is per Table 140.7-A/Table 170.2-R while "Use it or lose it" Allowances are per Table 140.7-B /Table 170.2-S. Indicate which allowances are being used to expand sections for user input. Luminaires that qualify for one of the "Use it or lose it" allowances shall not qualify for another "Use it or lose it" allowance. Outdoor lighting attached to multifamily buildings and controlled from the inside of a dwelling unit are included in Table H, and are not included here. All other multifamily outdoor lighting is included here.

01				
☒ General Hardscape Allowance Table I (below)	"Use it or lose it" Allowance (select all that apply) (select all that apply)			
	☒ Per Application Table J	☐ Sales Frontage Table K	☐ Ornamental Table L	☐ Per Specific Area Table M

Calculated General Hardscape Lighting Power Allowance per Table 140.7-A for Nonresidential & Hotel/Motel

02	03	04	05	06	07	08	09
Area Description	Area Wattage Allowance (AWA)			Linear Wattage Allowance (LWA)			Total General AWA + LWA (Watts)
	Illuminated Area (ft²)	Allowed Density (W/ft²)	Area Allowance (Watts)	Perimeter Length (lf)	Allowed Density (W/lf)	Linear Allowance (Watts)	
Bulding Exterior Lighting	2862	0.019	54.4	632	0.2	94.8	149
Parking Lot	28031	0.019	532.2	1044	0.2	156.6	689
POOL DECK LIGHTING	34314	0.019	652	811	0.2	121.6	774
EXIT TO PARKING LIGHTING	3416	0.019	64.9	239	0.2	35.8	101
				Initial Wattage Allowance for Entire Site (Watts):			200
				Instances of Initial Wattage Allowance (LZ 0 only)[1]			
				Total General Hardscape Allowance (Watts):			1912

STATE OF CALIFORNIA
Outdoor Lighting
CALIFORNIA ENERGY COMMISSION
CERTIFICATE OF COMPLIANCE NRCC-LTO-E
Project Name: SGT. JOHN PINNEY MEMORIAL POOL REPLACEMENT Report Page: (Page 7 of 9)
Date Prepared: 10-07-2025

J. LIGHTING ALLOWANCE: PER APPLICATION

This table includes areas using the wattage allowance per application from Table 140.7-B / Table 170.2-S.

01	02	03	04	05	06	07	08	09	10
Area Description	Application per Table 140.7-B[1]	CALCULATED ALLOWANCE (Watts)			DESIGN WATTS				Additional Allowance (Watts)
		# of Locations	Allowance per Location[2]	Extra Allowance (Watts)	Luminaire Name or Item Tag	Watts per Luminaire	# of Luminaires	Design Watts	
Building Enterance	Building Entrance/Exit	1	15	15	B1	8.8	2	17.6	15
					Total Design Watts for this Area:			17.6	
					Total Allowance (Watts) All Areas:				15

[1 FOOTNOTES: Primary entrance applications are only available for senior care facilities, healthcare facilities, police stations, hospitals, fire stations, and emergency vehicle facilities.
[2 The Allowance per Location for ATMs is 100W for the first ATM and 35W for each additional per Table 140.7-B/Table 170.2-S.
[3 For luminaires indicated in Table F as linear, wattage in column 07 is W/lf instead of Watts/luminaire. Total linear feet should be indicated in column 08 instead of number of luminaires.

K. LIGHTING ALLOWANCE: SALES FRONTAGE

This section does not apply to this project.

L. LIGHTING ALLOWANCE: ORNAMENTAL

This section does not apply to this project.

M. LIGHTING ALLOWANCE: PER SPECIFIC AREA

This section does not apply to this project.

N. EXISTING CONDITIONS POWER ALLOWANCE (alterations only)

This section does not apply to this project.

STATE OF CALIFORNIA
Outdoor Lighting
CALIFORNIA ENERGY COMMISSION
CERTIFICATE OF COMPLIANCE NRCC-LTO-E
Project Name: SGT. JOHN PINNEY MEMORIAL POOL REPLACEMENT Report Page: (Page 8 of 9)
Date Prepared: 10-07-2025

O. DECLARATION OF REQUIRED CERTIFICATES OF INSTALLATION

Selections have been made based on information provided in this document. If any selection has been changed by permit applicant, an explanation should be included in Table E. Additional Remarks. These documents must be provided to the building inspector during construction and can be found online

Form/Title
NRCI-LTO-E - Must be submitted for all buildings

P. DECLARATION OF REQUIRED CERTIFICATES OF ACCEPTANCE

Selections have been made based on information provided in this document. If any selection has been changed by permit applicant, an explanation should be included in Table E. Additional Remarks. These documents must be provided to the building inspector during construction and must be completed through an Acceptance Test Technician Certification Provider (ATTCP). For more information visit: http://www.energy.ca.gov/title24/attcp/providers.html

Form/Title	Systems/Spaces To Be Field Verified
NRCA-LTO-02-A - Must be submitted for all outdoor lighting controls except for alterations where controls are added to <= 20 luminaires.	Building Exterior Lighting; Building Entrance; Parking Lot; Exterior Sitting Area; Pool Deck Lighting; EXIT TO PARKING LIGHTING.

STATE OF CALIFORNIA
Outdoor Lighting
CALIFORNIA ENERGY COMMISSION
CERTIFICATE OF COMPLIANCE NRCC-LTO-E
Project Name: SGT. JOHN PINNEY MEMORIAL POOL REPLACEMENT Report Page: (Page 9 of 9)
Project Address: 205 S WARNER ST Date Prepared: 10-07-2025

DOCUMENTATION AUTHOR'S DECLARATION STATEMENT

I certify that this Certificate of Compliance documentation is accurate and complete.

Documentation Author Name: Manan H. Christian	Documentation Author Signature:
Company: Budlong & Associates	Signature Date: 2025-07-10
Address: 400 W. Ventura Blvd Suite 240	CEA/ HERS Certification Identification (if applicable): Budlong & Associates
City/State/Zip: Camarillo CA 93010	Phone: (805) 987-4001

RESPONSIBLE PERSON'S DECLARATION STATEMENT

I certify the following under penalty of perjury, under the laws of the State of California:

1. The information provided on this Certificate of Compliance is true and correct.
2. I am eligible under Division 3 of the Business and Professions Code to accept responsibility for the building design or system design identified on this Certificate of Compliance (responsible designer)
3. The energy features and performance specifications, materials, components, and manufactured devices for the building design or system design identified on this Certificate of Compliance conform to the requirements of Title 24, Part 1 and Part 6 of the California Code of Regulations.
4. The building design features or system design features identified on this Certificate of Compliance are consistent with the information provided on other applicable compliance documents, worksheets, calculations, plans and specifications submitted to the enforcement agency for approval with this building permit application.
5. I will ensure that a completed signed copy of this Certificate of Compliance shall be made available with the building permit(s) issued for the building, and made available to the enforcement agency for all applicable inspections. I understand that a completed signed copy of this Certificate of Compliance is required to be included with the documentation the builder provides to the building owner at occupancy.

Responsible Designer Name: Manan H. Christian	Responsible Designer Signature:
Company: Budlong & Associates	Date Signed: 2025-07-10
Address: 400 W. Ventura Blvd Suite 240	License: E 22864
City/State/Zip: Camarillo CA 93010	Phone: (805) 987-4001

Generated Date/Time: Documentation Software: EnergyPro
CA Building Energy Efficiency Standards - 2022 Nonresidential Compliance Report Version: 2022.0.000 Schema Version: rev 20220101 Compliance ID: EnergyPro-5468-0725-2426 Report Generated: 2025-07-10 02:57:03

AGENCY

FLEWELLING & MOODY
architecture planning interiors

HEADQUARTERS OFFICE:
99 S. Lake Avenue, Suite 300
Pasadena, CA 91101
Phone: 323.543.8300
E-Mail: fm-pasadena@flewelling-moody.com

ANTELOPE VALLEY OFFICE:
1035 West Lancaster Boulvard
Lancaster, California 93534
Phone: 661.949.0771
E-Mail: fm-lancaster@flewelling-moody.com

An Employee Owned Corporation

ARCHITECT

CONSULTANT

Budlong
An MBE|SBE|DBE|LSBE Firm
Glendale|Downtown LA|Fremont|Camarillo
W W W . B U D L O N G . C O M
Job No. 23-140

REGISTERED PROFESSIONAL ENGINEER MANAN H. CHRISTIAN No. E 22864 ELECTRICAL STATE OF CALIFORNIA

Drawn by: Author
Check by: Checker

Revisions

No.	Date	Description
	01/26/24	100% DD
	03/01/24	50% CD
	05/09/24	90% CD
	08/05/24	100% CD
	11/25/24	100% CD V2
	01/31/25	100% CD V3
1	08/27/2025	BID ALTERNATE

All dimensions must be checked at the job by the contractor who accepts full responsibility for their accuracy under the contract. These plans & the specifications in connection therewith have been prepared for a specific site. Any and all responsibility for their use in whole or in part on any other site is hereby disclaimed by Flewelling & Moody.

CITY OF RIDGECREST

SGT. JOHN PINNEY MEMORIAL POOL REPLACEMENT

205 S WARNER ST, RIDGECREST, CA 93555

Drawing Title

ELECTRICAL T-24 FORMS - OUTDOOR (COMMUNITY BUILDING) ALT 6

Job No. 3055-0000
Sheet No. **E7.02A6**
Date 08/07/2024

STATE OF CALIFORNIA
Outdoor Lighting
CALIFORNIA ENERGY COMMISSION

CERTIFICATE OF COMPLIANCE — **NRCC-LTO-E**

Project Name: SGT. JOHN PINNEY MEMORIAL POOL REPLACEMENT — **Report Page:** (Page 1 of 9)
Project Address: 205 S WARNER ST — **Date Prepared:** 10-07-2025

This document is used to demonstrate compliance with requirements in 110.9, 130.0, 130.2, 140.7, and 141.0(b)2I, for outdoor lighting scopes using the prescriptive path for nonresidential and hotel/motel occupancies. It is also used to document compliance with requirements in 160.5, 170.2(e)6, 180.1(a) and 180.2(b)4Bv for outdoor lighting scopes using the prescriptive path for multifamily and mixed-use occupancies. Multifamily includes dormitory and senior living facilities.

A. GENERAL INFORMATION

01	Project Location (city)	RIDGECREST	04	Total Illuminated Hardscape Area (ft^2)	69227
02	Climate Zone	14			
03	Outdoor Lighting Zone per Title 24 Part 1	10.114 or as designated by Authority Having Jurisdiction (AHJ):			
☐	LZ-0: Very Low - Undeveloped Parklands	☒ LZ-2: Moderate - Urban Clusters	☐	LZ-4: High - Must be reviewed by CA Energy Commission for Approval	
☐	LZ-1: Low - Rural Areas	☐ LZ-3: Moderately High - Urban Areas			
05	Occupancy Types within Project				

● Office ● Support Areas ● Warehouse ● All Other Occupancies

B. PROJECT SCOPE

This table includes outdoor lighting systems that are within the scope of the permit application and are demonstrating compliance using the prescriptive path outlined in 140.7 / 170.2(e)6 or 141.0(b)2I. / 180.2(b)4Bv for alterations.

My Project Consists of:

01	02
☒ New Lighting System	Must Comply with Allowances from 140.7 / 170.2(e)6
☐ Altered Lighting System	Is your alteration increasing the connected lighting load (Watts)? ○ Yes ○ No

03	04	05
	% of Existing Luminaires Being Altered[1]	Sum Total of Luminaires Being Added or Altered	Calculation Method
☐ < 10% ☐ >= 10% and < 50% ☐ >= 50%		

Please proceed to Table I. Outdoor Lighting Fixture Schedule to define the project's luminaires.

[1] FOOTNOTES: % of Existing Luminaires Being Altered = (Sum Total of Luminaires Being Added or Altered / Existing Luminaires within the Scope of the Permit Application) x 100.

Generated Date/Time: — Documentation Software: EnergyPro
CA Building Energy Efficiency Standards - 2022 Nonresidential Compliance — Report Version: 2022.0.000 Schema Version: rev 20220101 — Compliance ID: EnergyPro-5468-0725-2425 Report Generated: 2025-07-10 02:32:14

STATE OF CALIFORNIA
Outdoor Lighting
CALIFORNIA ENERGY COMMISSION
CERTIFICATE OF COMPLIANCE — **NRCC-LTO-E**
Project Name: SGT. JOHN PINNEY MEMORIAL POOL REPLACEMENT — **Report Page:** (Page 2 of 9)
Date Prepared: 10-07-2025

C. COMPLIANCE RESULTS

Results in this table are automatically calculated from data input and calculations in Tables F through N. Note: if any cell on this table says "COMPLIES with Exceptional Conditions" refer to Table D. Exceptional Conditions for guidance or see applicable Table referenced below.

Calculations of Total Allowed Lighting Power (Watts) 140.7 / 170.2(e)6 or 141.0(b)2I. / 180.2(b)4Bv												Compliance Results		
01		02		03		04		05		06		07		08	09
General Hardscape Allowance 140.7(d)1 / 170.2(e)6 (See Table I)	+	Per Application 140.7(d)2 / 170.2(e)6 (See Table J)	+	Sales Frontage 140.7(d)2 (See Table K)	+	Ornamental 140.7(d)2 / 170.2(e)6 (See Table L)	+	Per Specific Area 140.7(d)2 / 170.2(e)6 (See Table M)	OR	Existing Power Allowance 141.0(b)2I. / 180.2(b)4Bv (See Table N)	=	**Total Allowed** (Watts)	≥	**Total Actual** (Watts)	**07 must be >= 08**
1,942	+	15	+	---	+	---	+	---	OR	---	=	1,957	≥	1,087	COMPLIES

Shielding Compliance (See Table G for Details)	N/A
Controls Compliance (See Table H for Details)	COMPLIES

D. EXCEPTIONAL CONDITIONS

This table is auto-filled with uneditable comments because of selections made or data entered in tables throughout the form.

E. ADDITIONAL REMARKS

This table includes remarks made by the permit applicant to the Authority Having Jurisdiction.

STATE OF CALIFORNIA
Outdoor Lighting
CALIFORNIA ENERGY COMMISSION
CERTIFICATE OF COMPLIANCE — **NRCC-LTO-E**
Project Name: SGT. JOHN PINNEY MEMORIAL POOL REPLACEMENT — **Report Page:** (Page 3 of 9)
Date Prepared: 10-07-2025

F. OUTDOOR LIGHTING FIXTURE SCHEDULE

For new or altered lighting systems demonstrating compliance with 140.7 / 170.2(e)6 all new luminaires being installed and any existing luminaires remaining or being moved within the spaces covered by the permit application are included in the Table below. For altered lighting systems using the Existing Power method per 141.0(b)2I. only new luminaires being installed and replacement luminaires being installed as part of the project scope are included (ie, existing luminaires remaining or existing luminaires being moved are not included). Outdoor lighting attached to multifamily buildings and controlled from the inside of a dwelling unit are included in Table H. and are not included here. All other multifamily outdoor lighting is included here.

Designed Wattage:

01	02	03	04	05	06	07	08	09	10	
Name or Item Tag	Complete Luminaire Description		Watts per luminaire* [1]	How is Wattage determined	Total Number Luminaires [2]	Luminaire Status[3]	Excluded per 140.7(a) / 170.2(e)6A	Design Watts	Cutoff Req. > 6,200 initial lumen output 130.2(b) / 160.5(c)1[4]	Pass	Field Inspector Fail
B1	B1- 6" Recessed downlight	☐ Linear	8.8	Mfr. Spec	2	New	☐	17.6	NA; < 6200 lumens	☐	☐
F	F - Wallpack LED Fixture	☐ Linear	35	Mfr. Spec	10	New	☐	350	NA; < 6200 lumens	☐	☐
H1	H1 - Wall Mount Cylindrical Fixture	☐ Linear	26	Mfr. Spec	2	New	☐	52	NA; < 6200 lumens	☐	☐
H2	H2 - Wall Mount Cylindrical Fixture	☐ Linear	14	Mfr. Spec	6	New	☐	84	NA; < 6200 lumens	☐	☐
I	I- BOLLARD	☐ Linear	11	Mfr. Spec	8	New	☐	88	NA; < 6200 lumens	☐	☐
S1	S1-Parking Pole Light	☐ Linear	33	Mfr. Spec	13	New	☐	429	NA; < 6200 lumens	☐	☐
S2	S2-Parking Pole Light	☐ Linear	33	Mfr. Spec	2	New	☐	66	NA; < 6200 lumens	☐	☐
							Total Design Watts:	1087			

* NOTES: Selections with a * require a note in the space below explaining how compliance is achieved.
EX: Luminaire is lighting a statue; EXCEPTION 2 to 130.2(b)

[1] FOOTNOTES: Authority Having Jurisdiction may ask for luminaire cut sheets to confirm wattage used for compliance per 130.0(c) / 160.5(b)
[2] For linear luminaires, wattage should be indicated as W/ft instead of Watts/luminaire. Total linear feet should be indicated in column D5 instead of number of luminaires.

STATE OF CALIFORNIA
Outdoor Lighting
CALIFORNIA ENERGY COMMISSION
CERTIFICATE OF COMPLIANCE — **NRCC-LTO-E**
Project Name: SGT. JOHN PINNEY MEMORIAL POOL REPLACEMENT — **Report Page:** (Page 4 of 9)
Date Prepared: 10-07-2025

F. OUTDOOR LIGHTING FIXTURE SCHEDULE

For new or altered lighting systems demonstrating compliance with 140.7 / 170.2(e)6 all new luminaires being installed and any existing luminaires remaining or being moved within the spaces covered by the permit application are included in the Table below. For altered lighting systems using the Existing Power method per 141.0(b)2I. only new luminaires being installed and replacement luminaires being installed as part of the project scope are included (ie, existing luminaires remaining or existing luminaires being moved are not included). Outdoor lighting attached to multifamily buildings and controlled from the inside of a dwelling unit are included in Table H. and are not included here. All other multifamily outdoor lighting is included here.

Designed Wattage:

01	02	03	04	05	06	07	08	09	10

[3] Select "New" for new luminaires in a new outdoor lighting project, or for added luminaires in an alteration. Select "Altered" for replacement luminaires in an alteration. Select "Existing to Remain" for existing luminaires within the project scope that are not being altered and are remaining. Select "Existing Reinstalled" for existing luminaires which are being removed and reinstalled as part of the project scope.
[4] Compliance with mandatory shielding requirements is required for luminaires with initial lumen output >= 6,200 unless exempted by 130.2(b)/ 160.5(c)

G. SHIELDING REQUIREMENTS (BUG)

This section does not apply to this project.

STATE OF CALIFORNIA
Outdoor Lighting
CALIFORNIA ENERGY COMMISSION
CERTIFICATE OF COMPLIANCE — **NRCC-LTO-E**
Project Name: SGT. JOHN PINNEY MEMORIAL POOL REPLACEMENT — **Report Page:** (Page 5 of 9)
Date Prepared: 10-07-2025

H. OUTDOOR LIGHTING CONTROLS

This table demonstrates compliance with controls requirements for all new or altered luminaires installed as part of the permit application. For alteration projects, luminaires which are existing to remain (ie untouched) and luminaires which are removed and reinstalled (wiring only) do not need to be included in this table even if they are within the spaces covered by the permit application.
Outdoor lighting for nonresidential buildings, parking garages and common service areas in multifamily buildings must be documented separately from outdoor lighting attached to multifamily buildings and controlled from the inside of a dwelling unit

Mandatory Controls for Nonresidential Occupancies, Parking Garages & Common Areas in Multifamily Buildings

01	02	03	04	05	
Area Description	Shut-Off 130.2(c)1 / 160.5(c)	Auto-Schedule 130.2(c)2 / 160.5(c)	Motion Sensor 130.2(c)3 / 160.5(c)	Field Inspector Pass	Fail
Building Exterior Lighting	Astronomical Timer	Provided	NA; Each Luminaire <= 40 Watts	☐	☐
Building Entrance	Astronomical Timer	Provided	NA; Each Luminaire <= 40 Watts	☐	☐
Parking Lot	Astronomical Timer	Provided	NA; Each Luminaire <= 40 Watts	☐	☐
Exterior Sitting Area	Astronomical Timer	Provided	NA; Each Luminaire <= 40 Watts	☐	☐
Pool Deck Lighting	Astronomical Timer	Provided	NA; Each Luminaire <= 40 Watts	☐	☐
BUILDING EXTERIOR LIGHTING - ALT 7	Astronomical Timer	Provided	NA; Each Luminaire <= 40 Watts	☐	☐

[1] FOOTNOTE: Text has been abbreviated, please refer to Table 160.5-A to confirm compliance with the specific light source technologies listed.
[2] Authority having jurisdiction may ask for cutsheets or other documentation to confirm compliance of light source.
[3] Recessed luminaires marked for use in fire-rated installations, and recessed luminaires installed in non-insulated ceilings are excepted from ii and iii.

Generated Date/Time: — Documentation Software: EnergyPro
CA Building Energy Efficiency Standards - 2022 Nonresidential Compliance — Report Version: 2022.0.000 Schema Version: rev 20220101 — Compliance ID: EnergyPro-5468-0725-2425 Report Generated: 2025-07-10 02:32:14

STATE OF CALIFORNIA
Outdoor Lighting
CALIFORNIA ENERGY COMMISSION
CERTIFICATE OF COMPLIANCE — **NRCC-LTO-E**
Project Name: SGT. JOHN PINNEY MEMORIAL POOL REPLACEMENT — **Report Page:** (Page 6 of 9)
Date Prepared: 10-07-2025

I. LIGHTING POWER ALLOWANCE (per 140.7 / 170.2(e))

This table includes areas using allowance calculations per 140.7 / 170.2(e). General Hardscape Allowance is per Table 140.7-A/Table 170.2-R while "Use it or lose it" Allowances are per Table 140.7-B /Table 170.2-S. Indicate which allowances are being used to expand sections for user input. Luminaires that qualify for one of the "Use it or lose it" allowances shall not qualify for another "Use it or lose it" allowance. Outdoor lighting attached to multifamily buildings and controlled from the inside of a dwelling unit are included in Table H. and are not included here. All other multifamily outdoor lighting is included here.

	01				
	"Use it or lose it" Allowance (select all that apply)				(select all that apply)
☒ General Hardscape Allowance Table I (below)	☒ Per Application Table J	☐ Sales Frontage Table K	☐ Ornamental Table L	☐ Per Specific Area Table M	

Calculated General Hardscape Lighting Power Allowance per Table 140.7-A for Nonresidential & Hotel/Motel

02	03	04	05	06	07	08	09
Area Description	Area Wattage Allowance (AWA)			Linear Wattage Allowance (LWA)			Total General AWA + LWA (Watts)
	Illuminated Area (ft^2)	Allowed Density (W/ft^2)	Area Allowance (Watts)	Perimeter Length (lf)	Allowed Density (W/lf)	Linear Allowance (Watts)	
Bulding Exterior Lighting	2862	0.019	54.4	632	0.2	94.8	149
Parking Lot	28011	0.019	532.2	1044	0.2	156.6	689
EXTERIOR SITTING AREA	1011	0.019	19.2	133	0.2	20	39
POOL DECK LIGHTING	34314	0.019	652	811	0.2	121.6	774
BUILDING EXTERIOR LIGHTING - ALT 7	3029	0.019	57.5	223	0.2	33.4	91

Initial Wattage Allowance for Entire Site (Watts):	200
Instances of Initial Wattage Allowance (LZ 0 only)[1]	
Total General Hardscape Allowance (Watts):	1942

STATE OF CALIFORNIA
Outdoor Lighting
CALIFORNIA ENERGY COMMISSION
CERTIFICATE OF COMPLIANCE — **NRCC-LTO-E**
Project Name: SGT. JOHN PINNEY MEMORIAL POOL REPLACEMENT — **Report Page:** (Page 7 of 9)
Date Prepared: 10-07-2025

J. LIGHTING ALLOWANCE: PER APPLICATION

This table includes areas using the wattage allowance per application from Table 140.7-B / Table 170.2-S.

01	02	03	04	05	06	07	08	09	10
Area Description	Application per Table 140.7-B[1]	CALCULATED ALLOWANCE (Watts)			DESIGN WATTS				Additional Allowance (Watts)
		# of Locations	Allowance per Location[2]	Extra Allowance (Watts)	Luminaire Name or Item Tag	Watts per Luminaire	# of Luminaires	Design Watts	
Building Enterance	Building Entrance/Exit	1	15	15	B1	8.8	2	17.6	15
					Total Design Watts for this Area:			17.6	
					Total Allowance (Watts) All Areas:				15

[1] FOOTNOTES: Primary entrance applications are only available for senior care facilities, healthcare facilities, police stations, hospitals, fire stations, and emergency vehicle facilities.
[2] The Allowance per Location for ATMs is 100W for the first ATM and 35W for each additional per Table 140.7-B /Table 170.2-S.
[3] For luminaires indicated in Table F as linear, wattage in column G7 is W/lf instead of Watts/luminaire. Total linear feet should be indicated in column D8 instead of number of luminaires.

K. LIGHTING ALLOWANCE: SALES FRONTAGE

This section does not apply to this project.

L. LIGHTING ALLOWANCE: ORNAMENTAL

This section does not apply to this project.

M. LIGHTING ALLOWANCE: PER SPECIFIC AREA

This section does not apply to this project.

N. EXISTING CONDITIONS POWER ALLOWANCE (alterations only)

This section does not apply to this project.

Generated Date/Time: — Documentation Software: EnergyPro
CA Building Energy Efficiency Standards - 2022 Nonresidential Compliance — Report Version: 2022.0.000 Schema Version: rev 20220101 — Compliance ID: EnergyPro-5468-0725-2425 Report Generated: 2025-07-10 02:32:14

STATE OF CALIFORNIA
Outdoor Lighting
CALIFORNIA ENERGY COMMISSION
CERTIFICATE OF COMPLIANCE — **NRCC-LTO-E**
Project Name: SGT. JOHN PINNEY MEMORIAL POOL REPLACEMENT — **Report Page:** (Page 8 of 9)
Date Prepared: 10-07-2025

O. DECLARATION OF REQUIRED CERTIFICATES OF INSTALLATION

Selections have been made based on information provided in this document. If any selection has been changed by permit applicant, an explanation should be included in Table E. Additional Remarks. These documents must be provided to the building inspector during construction and can be found online

Form/Title
NRCI-LTO-E - Must be submitted for all buildings

P. DECLARATION OF REQUIRED CERTIFICATES OF ACCEPTANCE

Selections have been made based on information provided in this document. If any selection has been changed by permit applicant, an explanation should be included in Table E. Additional Remarks. These documents must be provided to the building inspector during construction and must be completed through an Acceptance Test Technician Certification Provider (ATTCP). For more information visit: http://www.energy.ca.gov/title24/attcp/providers.html

Form/Title	Systems/Spaces To Be Field Verified
NRCA-LTO-02-A - Must be submitted for all outdoor lighting controls except for alterations where controls are added to <= 20 luminaires.	Building Exterior Lighting; Building Entrance; Parking Lot; Exterior Sitting Area; Pool Deck Lighting; BUILDING EXTERIOR LIGHTING - ALT 7;

Generated Date/Time: — Documentation Software: EnergyPro
CA Building Energy Efficiency Standards - 2022 Nonresidential Compliance — Report Version: 2022.0.000 Schema Version: rev 20220101 — Compliance ID: EnergyPro-5468-0725-2425 Report Generated: 2025-07-10 02:32:14

STATE OF CALIFORNIA
Outdoor Lighting
CALIFORNIA ENERGY COMMISSION
CERTIFICATE OF COMPLIANCE — **NRCC-LTO-E**
Project Name: SGT. JOHN PINNEY MEMORIAL POOL REPLACEMENT — **Report Page:** (Page 9 of 9)
Project Address: 205 S WARNER ST — **Date Prepared:** 10-07-2025

DOCUMENTATION AUTHOR'S DECLARATION STATEMENT

I certify that this Certificate of Compliance documentation is accurate and complete.

Documentation Author Name: Manan H. Christian	Documentation Author Signature:
Company: Budlong & Associates	Signature Date: 2025-07-10
Address: 400 W. Ventura Blvd Suite 240	CEA/ HERS Certification Identification (if applicable): Budlong & Associates
City/State/Zip: Camarillo CA 93010	Phone: (805) 987-4001

RESPONSIBLE PERSON'S DECLARATION STATEMENT

I certify the following under penalty of perjury, under the laws of the State of California:

1. The information provided on this Certificate of Compliance is true and correct.
2. I am eligible under Division 3 of the Business and Professions Code to accept responsibility for the building design or system design identified on this Certificate of Compliance (responsible designer)
3. The energy features and performance specifications, materials, components, and manufactured devices for the building design or system design identified on this Certificate of Compliance conform to the requirements of Title 24, Part 1 and Part 6 of the California Code of Regulations.
4. The building design features or system design features identified on this Certificate of Compliance are consistent with the information provided on other applicable compliance documents, worksheets, calculations, plans and specifications submitted to the enforcement agency for approval with this building permit application.
5. I will ensure that a completed signed copy of this Certificate of Compliance shall be made available with the building permit(s) issued for the building, and made available to the enforcement agency for all applicable inspections. I understand that a completed signed copy of this Certificate of Compliance is required to be included with the documentation the builder provides to the building owner at occupancy.

Responsible Designer Name: Manan H. Christian	Responsible Designer Signature:
Company: Budlong & Associates	Date Signed: 2025-07-10
Address: 400 W. Ventura Blvd Suite 240	License: E 22864
City/State/Zip: Camarillo CA 93010	Phone: (805) 987-4001

Generated Date/Time: — Documentation Software: EnergyPro
CA Building Energy Efficiency Standards - 2022 Nonresidential Compliance — Report Version: 2022.0.000 Schema Version: rev 20220101 — Compliance ID: EnergyPro-5468-0725-2425 Report Generated: 2025-07-10 02:32:14

AGENCY

FLEWELLING & MOODY
architecture planning interiors

HEADQUARTERS OFFICE:
99 S. Lake Avenue, Suite 300
Pasadena, CA 91101
Phone: 323.543.8300
E-Mail: fm-pasadena@flewelling-moody.com

ANTELOPE VALLEY OFFICE:
1035 West Lancaster Boulvard
Lancaster, California 93534
Phone: 661.949.0771
E-Mail: fm-lancaster@flewelling-moody.com

An Employee Owned Corporation

ARCHITECT

CONSULTANT

Budlong
An MBE|SBE|DBE|LSBE Firm
Glendale|Downtown LA|Fremont|Camarillo
WWW.BUDLONG.COM
Job No. 23-140

REGISTERED PROFESSIONAL ENGINEER — MANAN H. CHRISTIAN — No. E 22864 — 07/31/25 — ELECTRICAL — STATE OF CALIFORNIA

Drawn by: Author
Check by: Checker

Revisions

No.	Date	Description
	01/26/24	100% DD
	03/01/24	50% CD
	05/09/24	90% CD
	08/05/24	100% CD
	11/25/24	100% CD V2
	01/31/25	100% CD V3
1	08/27/2025	BID ALTERNATE

All dimensions must be checked at the job by the contractor who accepts full responsibility for their accuracy under the contract. These plans & the specifications in connection therewith have been prepared for a specific site. Any and all responsibility for their use in whole or in part on any other site is hereby disclaimed by Flewelling & Moody.

CITY OF RIDGECREST

SGT. JOHN PINNEY MEMORIAL POOL REPLACEMENT

205 S WARNER ST, RIDGECREST, CA 93555

Drawing Title

ELECTRICAL T-24 FORMS - OUTDOOR (COMMUNITY BUILDING) ALT 7

Job No. 3055-0000
Date 08/07/2024
Sheet No. **E7.02A7**

STATE OF CALIFORNIA
Indoor Lighting CALIFORNIA ENERGY COMMISSION

CERTIFICATE OF COMPLIANCE NRCC-LTI-E

This document is used to demonstrate compliance with requirements in 110.9, 110.12(c), 130.0, 130.1, 140.6 and 141.0(b)2 for indoor lighting scopes using the prescriptive path for nonresidential and hotel/motel occupancies. It is also used to document compliance with requirements in 160.5, 170.2(e) and 180.2(b)4 for indoor lighting scopes using the prescriptive path for multifamily occupancies. Multifamily includes dormitory and senior living facilities.

Project Name:	SGT. JOHN PINNEY MEMORIAL POOL REPLACEMENT	**Report Page:**	**(Page 1 of 8)**
Project Address:	205 S WARNER ST	**Date Prepared:**	20-11-2024

A. GENERAL INFORMATION

01	Project Location (city)	RIDGECREST	04 Total Conditioned Floor Area (ft²)	0
02	Climate Zone	14	05 Total Unconditioned Floor Area (ft²)	1,505
03	Occupancy Types Within Project (select all that apply):		06 # of Stories (Habitable Above Grade)	1

● Support Areas ● Warehouse

B. PROJECT SCOPE

This table includes any lighting systems that are within the scope of the permit application and are demonstrating compliance using the prescriptive path outlined in 140.6 / 170.2(e) or 141.0(b)2 / 180.2(b)4 for alterations.

Scope of Work	Conditioned Spaces		Unconditioned Spaces	
01	02	03	04	05
My Project Consists of (check all that apply):	Calculation Method	Area (ft²)	Calculation Method	Area (ft²)
☒ New Lighting System	Area Category Method	0	Area Category Method	1505
☐ New Lighting System - Parking Garage				
Total Area of Work (ft²)	0		1505	

Generated Date/Time: | Documentation Software: EnergyPro

CA Building Energy Efficiency Standards - 2022 Nonresidential Compliance | Report Version: 2022.0.000 | Schema Version: rev 20220101 | Compliance ID: EnergyPro-5468-1124-1750 | Report Generated: 2024-11-19 22:31:02

STATE OF CALIFORNIA
Indoor Lighting CALIFORNIA ENERGY COMMISSION
CERTIFICATE OF COMPLIANCE NRCC-LTI-E
Project Name: SGT. JOHN PINNEY MEMORIAL POOL REPLACEMENT | **Report Page:** (Page 2 of 8) | **Date Prepared:** 20-11-2024

C. COMPLIANCE RESULTS

If any cell on this table says "DOES NOT COMPLY" or "COMPLIES with Exceptional Conditions" refer to Table O. for guidance.

Lighting in conditioned and unconditioned spaces must not be combined for compliance per 140.6(b)1 / 170.2(e)	Allowed Lighting Power per 140.6(b) / 170.2(e) (Watts)						Adjusted Lighting Power per 140.6(a) / 170.2(e) (Watts)				Compliance Results
	01	02	03	04	05		06	07		08	09
	Complete Building 140.6(c)1	Area Category 140.6(c)2 / 170.2(e)4	Area Category Additional 140.6(c)2G / 170.2(e)4Av (+)	Tailored 140.6(c)3 / 170.2(e)4B (+)			Total Designed (Watts)	Adjustments PAF Lighting Control Credits 140.6(a)2 / 170.2(e)1B (-)		Total Adjusted (Watts) *Includes Adjustments	
	(See Table I)	(See Table I)	(See Table J)	(See Table K)			(See Table F)	(See Table P)			
Conditioned					=	≥			=		
Unconditioned		670	0		=	670 ≥	610	0	=	610	COMPLIES
Controls Compliance (See Table H for Details)											COMPLIES
Rated Power Reduction Compliance (See Table Q for Details)											

D. EXCEPTIONAL CONDITIONS

This table is auto-filled with uneditable comments because of selections made or data entered in tables throughout the form.

E. ADDITIONAL REMARKS

This table includes remarks made by the permit applicant to the Authority Having Jurisdiction.

Generated Date/Time: | Documentation Software: EnergyPro

CA Building Energy Efficiency Standards - 2022 Nonresidential Compliance | Report Version: 2022.0.000 | Schema Version: rev 20220101 | Compliance ID: EnergyPro-5468-1124-1750 | Report Generated: 2024-11-19 22:31:02

STATE OF CALIFORNIA
Indoor Lighting CALIFORNIA ENERGY COMMISSION
CERTIFICATE OF COMPLIANCE NRCC-LTI-E
Project Name: SGT. JOHN PINNEY MEMORIAL POOL REPLACEMENT | **Report Page:** (Page 3 of 8) | **Date Prepared:** 20-11-2024

F. INDOOR LIGHTING FIXTURE SCHEDULE

This table includes all planned permanent and portable lighting other than dwelling unit/ hotel/ motel room lighting. Multifamily dwelling unit and hotel/motel room lighting is documented in Table T. If using Table T to document lighting in multifamily common use areas providing shared provisions for living, eating, cooking or sanitation, those luminaires are not included here.

Designed Wattage: Unconditioned Spaces

01	02	03	04	05	06	07	08	09	10	
Name or Item Tag	Complete Luminaire Description	Modular (Track) Fixture	Small Aperture & Color Change[1]	Watts per luminaire[2]	How is Wattage determined	Total Number of Luminaires	Excluded per 140.6(a)3 / 170.2(e)3C	Design Watts	Field Inspector	
									Pass	Fail
A1-4	A1-4 - 4ft Recessed Linear	No	NA	24	Mfr. Spec	4	No	96	☐	☐
B1	B1- 6" Recessed downlight	No	NA	8.8	Mfr. Spec	8	No	70.4	☐	☐
C3-8	C3 - 8ft Pendant Slip Light	No	NA	37	Mfr. Spec	12	No	444	☐	☐
					Total Designed Watts: UNCONDITIONED SPACES			610		

[1]*FOOTNOTE: Design Watts for small aperture and color changing luminaires which qualify per 140.6(a)4B / 170.2(e)2D is adjusted to be 75%./80% of their rated wattage. Table F automatically makes this adjustment, the permit applicant should enter full rated wattage in column 05.*

[2]*Authority Having Jurisdiction may ask for Luminaire cut sheets to confirm wattage used for compliance per 130.0(c) / 160.5(b). Wattage used must be the maximum rated for the luminaire, not the lamp.*

G. MODULAR LIGHTING SYSTEMS

This section does not apply to this project.

H. INDOOR LIGHTING CONTROLS (Not including PAFs)

This table includes lighting controls for conditioned and unconditioned spaces.

Building Level Controls

01	02	03	
		Field Inspector	
		Pass	Fail
Mandatory Demand Response 110.12(c)	Shut-off controls 130.1(c) / 160.5(b)4C		
Required >= 4,000W subject to multilevel	See Area/Space Level Controls	☐	☐

Generated Date/Time: | Documentation Software: EnergyPro

CA Building Energy Efficiency Standards - 2022 Nonresidential Compliance | Report Version: 2022.0.000 | Schema Version: rev 20220101 | Compliance ID: EnergyPro-5468-1124-1750 | Report Generated: 2024-11-19 22:31:02

STATE OF CALIFORNIA
Indoor Lighting CALIFORNIA ENERGY COMMISSION
CERTIFICATE OF COMPLIANCE NRCC-LTI-E
Project Name: SGT. JOHN PINNEY MEMORIAL POOL REPLACEMENT | **Report Page:** (Page 4 of 8) | **Date Prepared:** 20-11-2024

H. INDOOR LIGHTING CONTROLS (Not including PAFs)

Area Level Controls

04	05	06	07	08	09	10	11	12	
Area Description	Complete Building or Area Category Primary Function Area	Manual Area Controls 130.1(a) / 160.5(b)4A	Multi-Level Controls 130.1(b) / 160.5(b)4B	Shut-Off Controls 130.1(c) / 160.5(b)4C	Primary/Sky lit Daylighting 130.1(d) / 160.5(b)4D	Secondary Daylighting 130.1(d) / 160.5(b)4D	Interlocked Systems 140.6(a)1/ 170.2(e)2A	Field Inspector	
								Pass	Fail
Restroom-1	Restroom	Readily Accesible	NA: Restrooms	Occupancy Sensor	NA: General Ltg < 120W / NA: General Ltg < 120W		No	☐	☐
Restroom-2	Restroom	Readily Accesible	NA: Restrooms	Occupancy Sensor	NA: General Ltg < 120W / NA: General Ltg < 120W		No	☐	☐
Restroom-3	Restroom	Readily Accesible	NA: Restrooms	Occupancy Sensor	NA: General Ltg < 120W / NA: General Ltg < 120W		No	☐	☐
Restroom-4	Restroom	Readily Accesible	NA: Restrooms	Occupancy Sensor	NA: General Ltg < 120W / NA: General Ltg < 120W		No	☐	☐
Pool Equipment Storage	All Other Space Types	Readily Accesible	Dimmer	Occupancy Sensor	NA: General Ltg < 120W / NA: General Ltg < 120W		No	☐	☐
							13		
							Plan Sheet Showing Daylit Zones:		
							E2.03		

I. LIGHTING POWER ALLOWANCE: COMPLETE BUILDING OR AREA CATEGORY METHODS

Each area complying using the Complete Building or Area Category Methods per 140.6(b) are included in this table. Column 06 indicates if additional lighting power allowances per 140.6(c) or adjustments per 140.6(a) are being used .

Unconditioned Spaces

01	02	03	04	05	06	
Area Description	Complete Building or Area Category Primary Function Area	Allowed Density (W/ft²)	Area (ft²)	Allowed Wattage (Watts)	Additional Allowance / Adjustment	
					Area Category	PAF
Pool Equipment Storage	Commercial Industrial Warehouse	0.4	1,233	493.2	No	No

Generated Date/Time: | Documentation Software: EnergyPro

CA Building Energy Efficiency Standards - 2022 Nonresidential Compliance | Report Version: 2022.0.000 | Schema Version: rev 20220101 | Compliance ID: EnergyPro-5468-1124-1750 | Report Generated: 2024-11-19 22:31:02

STATE OF CALIFORNIA
Indoor Lighting CALIFORNIA ENERGY COMMISSION
CERTIFICATE OF COMPLIANCE NRCC-LTI-E
Project Name: SGT. JOHN PINNEY MEMORIAL POOL REPLACEMENT | **Report Page:** (Page 5 of 8) | **Date Prepared:** 20-11-2024

I. LIGHTING POWER ALLOWANCE: COMPLETE BUILDING OR AREA CATEGORY METHODS

Restrooms	Restroom	0.65	272	176.8	No	No
	TOTALS:	1,505	670		See Tables I, or P for detail	

J. ADDITIONAL ALLOWANCE: AREA CATEGORY METHOD QUALIFYING LIGHTING SYSTEM

This section does not apply to this project.

K. TAILORED METHOD GENERAL LIGHTING POWER ALLOWANCE

This section does not apply to this project.

L. ADDITIONAL LIGHTING ALLOWANCE: TAILORED WALL DISPLAY

This section does not apply to this project.

M. ADDITIONAL LIGHTING ALLOWANCE: TAILORED FLOOR AND TASK LIGHTING

This section does not apply to this project.

N. ADDITIONAL LIGHTING ALLOWANCE: TAILORED DECORATIVE /SPECIAL EFFECTS

This section does not apply to this project.

O. ADDITIONAL LIGHTING ALLOWANCE: TAILORED VERY VALUABLE MERCHANDISE

This section does not apply to this project.

P. POWER ADJUSTMENT: LIGHTING CONTROL CREDIT (POWER ADJUSTMENT FACTOR (PAF))

This section does not apply to this project.

Generated Date/Time: | Documentation Software: EnergyPro

CA Building Energy Efficiency Standards - 2022 Nonresidential Compliance | Report Version: 2022.0.000 | Schema Version: rev 20220101 | Compliance ID: EnergyPro-5468-1124-1750 | Report Generated: 2024-11-19 22:31:02

STATE OF CALIFORNIA
Indoor Lighting CALIFORNIA ENERGY COMMISSION
CERTIFICATE OF COMPLIANCE NRCC-LTI-E
Project Name: SGT. JOHN PINNEY MEMORIAL POOL REPLACEMENT | **Report Page:** (Page 6 of 8) | **Date Prepared:** 20-11-2024

Q. RATED POWER REDUCTION COMPLIANCE FOR ONE-FOR-ONE ALTERATIONS

This section does not apply to this project.

R. 80% LIGHTING POWER FOR ALL ALTERATIONS - CONTROLS EXCEPTIONS

This section does not apply to this project.

S. DAYLIGHT DESIGN POWER ADJUSTMENT FACTOR (PAF)

This section does not apply to this project.

T. DWELLING UNIT LIGHTING

This section does not apply to this project.

U. DECLARATION OF REQUIRED CERTIFICATES OF INSTALLATION

Selections have been made based on information provided in this document. If any selections have been changed by permit applicant, an explanation should be included in Table E. Additional Remarks. These documents must be provided to the building inspector during construction and can be found online

Form/Title
NRCI-LTI-E - Must be submitted for all buildings

Generated Date/Time: | Documentation Software: EnergyPro

CA Building Energy Efficiency Standards - 2022 Nonresidential Compliance | Report Version: 2022.0.000 | Schema Version: rev 20220101 | Compliance ID: EnergyPro-5468-1124-1750 | Report Generated: 2024-11-19 22:31:02

STATE OF CALIFORNIA
Indoor Lighting CALIFORNIA ENERGY COMMISSION
CERTIFICATE OF COMPLIANCE NRCC-LTI-E
Project Name: SGT. JOHN PINNEY MEMORIAL POOL REPLACEMENT | **Report Page:** (Page 7 of 8) | **Date Prepared:** 20-11-2024

V. DECLARATION OF REQUIRED CERTIFICATES OF ACCEPTANCE

Selections have been made based on information provided in this document. If any selections have been changed by the permit applicant, an explanation should be included in Table E: Additional Remarks. These documents must be provided to the building inspector during construction and any with "-A" in the form name must be completed through an Acceptance Test Technician Certification Provider (ATTCP). For more information visit: http://www.energy.ca.gov/title24/attcp/providers.html

Form/Title	Systems/Spaces To Be Field Verified
NRCA-LTI-02-A - Must be submitted for occupancy sensors and automatic time switch controls.	Restroom-1; Restroom-2; Restroom-3; Restroom-4; Pool Equipment Storage;
NRCA-LTI-04-A - Must be submitted for demand responsive lighting controls.	Whole Building Demand Response;

Generated Date/Time: | Documentation Software: EnergyPro

CA Building Energy Efficiency Standards - 2022 Nonresidential Compliance | Report Version: 2022.0.000 | Schema Version: rev 20220101 | Compliance ID: EnergyPro-5468-1124-1750 | Report Generated: 2024-11-19 22:31:02

STATE OF CALIFORNIA
Indoor Lighting CALIFORNIA ENERGY COMMISSION
CERTIFICATE OF COMPLIANCE NRCC-LTI-E
Project Name: SGT. JOHN PINNEY MEMORIAL POOL REPLACEMENT | **Report Page:** (Page 8 of 8) | **Project Address:** 205 S WARNER ST | **Date Prepared:** 20-11-2024

DOCUMENTATION AUTHOR'S DECLARATION STATEMENT

I certify that this Certificate of Compliance documentation is accurate and complete.

Documentation Author Name: Manan H. Christian	Documentation Author Signature:
Company: Budlong & Associates	Signature Date: 2024-11-20
Address: 400 W. Ventura Blvd Suite 240	CEA/ HERS Certification Identification (if applicable):
City/State/Zip: Camarillo CA 93010	Phone: (805) 987-4001

RESPONSIBLE PERSON'S DECLARATION STATEMENT

I certify the following under penalty of perjury, under the laws of the State of California:

1. The information provided on this Certificate of Compliance is true and correct.
2. I am eligible under Division 3 of the Business and Professions Code to accept responsibility for the building design or system design identified on this Certificate of Compliance (responsible designer)
3. The building design features or system design features identified on this Certificate of Compliance conform to the requirements of Title 24, Part 1 and Part 6 of the California Code of Regulations.
4. The building design features or system design features identified on this Certificate of Compliance are consistent with the information provided on other applicable compliance documents, worksheets, calculations, plans and specifications submitted to the enforcement agency for approval with this building permit application.
5. I will ensure that a completed signed copy of this Certificate of Compliance shall be made available with the building permit(s) issued for the building, and made available to the enforcement agency for all applicable inspections. I understand that a completed signed copy of this Certificate of Compliance is required to be included with the documentation the builder provides to the building owner at occupancy.

Responsible Designer Name: Manan H. Christian	Responsible Designer Signature:
Company: Budlong & Associates	Date Signed: 2024-11-20
Address: 400 W. Ventura Blvd Suite 240	License: E 22864
City/State/Zip: Camarillo CA 93010	Phone: (805) 987-4001

Generated Date/Time: | Documentation Software: EnergyPro

CA Building Energy Efficiency Standards - 2022 Nonresidential Compliance | Report Version: 2022.0.000 | Schema Version: rev 20220101 | Compliance ID: EnergyPro-5468-1124-1750 | Report Generated: 2024-11-19 22:31:02

AGENCY

REVIEWED FOR CODE COMPLIANCE BY: WILLDAN ENGINEERING

Approval of these plans & specifications shall not be construed to be a permit for, or an approval of any violation of any Federal, State, County or City laws or ordinances. One set of approved plans must be kept on the job until completion.

10:06:57 AM Jul 21, 2025

FLEWELLING & MOODY
architecture planning interiors

HEADQUARTERS OFFICE:
99 S. Lake Avenue, Suite 300
Pasadena, CA 91101
Phone: 323.543.8300
E-Mail: fm-pasadena@flewelling-moody.com

ANTELOPE VALLEY OFFICE:
1035 West Lancaster Boulvard
Lancaster, California 93534
Phone: 661.949.0771
E-Mail: fm-lancaster@flewelling-moody.com

An Employee Owned Corporation

ARCHITECT

CONSULTANT

Budlong
An MBE|SBE|DBE|LSBE Firm
Glendale|Downtown LA|Fremont|Camarillo
W W W . B U D L O N G . C O M
Job No. 23-140

REGISTERED PROFESSIONAL ENGINEER MANAN H. CHRISTIAN E 22864 CIVIL ELECTRICAL STATE OF CA

Drawn by: Author

Check by: Checker

Revisions

No.	Date	Description
	01/26/24	100% DD
	03/01/24	50% CD
	05/09/24	90% CD
	08/05/24	100% CD
	11/25/24	100% CD V2
	01/31/25	100% CD V3

All dimensions must be checked at the job by the contractor who accepts full responsibility for their accuracy under the contract. These plans & the specifications in connection therewith have been prepared for a specific site. Any and all responsibility for their use in whole or in part on any other site is hereby disclaimed by Flewelling & Moody.

CITY OF RIDGECREST

SGT. JOHN PINNEY MEMORIAL POOL REPLACEMENT

205 S WARNER ST, RIDGECREST, CA 93555

Drawing Title

ELECTRICAL T-24 FORMS - INDOOR (STORAGE BUILDING)

Job No. 3055-0100

Date 05/09/2025

Sheet No. **E7.03**

STATE OF CALIFORNIA
Outdoor Lighting
CALIFORNIA ENERGY COMMISSION

CERTIFICATE OF COMPLIANCE		NRCC-LTO-E
Project Name: SGT. JOHN PINNEY MEMORIAL POOL REPLACEMENT	Report Page:	(Page 1 of 8)
Project Address: 205 S WARNER ST	Date Prepared:	20-11-2024

This document is used to demonstrate compliance with requirements in 110.9, 130.0, 130.2, 140.7, and 141.0(b)2), for outdoor lighting scopes using the prescriptive path for nonresidential and hotel/motel occupancies. It is also used to document compliance with requirements in 160.5, 170.2(e)6, 180.1(a) and 180.2(b)4Bv for outdoor lighting scopes using the prescriptive path for multifamily and mixed-use occupancies. Multifamily includes dormitory and senior living facilities.

A. GENERAL INFORMATION

01	Project Location (city)	RIDGECREST	04	Total Illuminated Hardscape Area (ft²)	1303
02	Climate Zone	14			
03	Outdoor Lighting Zone per Title 24 Part 1	10.114 or as designated by Authority Having Jurisdiction (AHJ):			
☐	LZ-0: Very Low - Undeveloped Parklland	☒ LZ-2: Moderate - Urban Clusters	☐	LZ-4: High - Must be reviewed by CA Energy Commission for Approval	
☐	LZ-1: Low - Rural Areas	☐ LZ-3: Moderately High - Urban Areas			
05	Occupancy Types within Project				

★ Support Areas ★ Warehouse

B. PROJECT SCOPE

This table includes outdoor lighting systems that are within the scope of the permit application and are demonstrating compliance using the prescriptive path outlined in 140.7 / 170.2(e)6 or 141.0(b)2I. / 180.2(b)4Bv for alterations.

My Project Consists of:

01	02
☒ New Lighting System ☐ Altered Lighting System	Must Comply with Allowances from 140.7 / 170.2(e)6 Is your alteration increasing the connected lighting load (Watts)? ○ Yes ○ No

03	04	05
% of Existing Luminaires Being Altered[1]	Sum Total of Luminaires Being Added or Altered	Calculation Method
☐ < 10% ☐ >= 10% and < 50% ☐ >= 50%		

Please proceed to Table I. Outdoor Lighting Fixture Schedule to define the project's luminaires.

[1] FOOTNOTES: % of Existing Luminaires Being Altered = (Sum Total of Luminaires Being Added or Altered / Existing Luminaires within the Scope of the Permit Application) x 100.

Generated Date/Time: CA Building Energy Efficiency Standards - 2022 Nonresidential Compliance
Documentation Software: EnergyPro
Report Version: 2022.0.000 Schema Version: rev 20220101
Compliance ID: EnergyPro-5468-1124-1751 Report Generated: 2024-11-19 22:37:53

STATE OF CALIFORNIA
Outdoor Lighting
CALIFORNIA ENERGY COMMISSION

CERTIFICATE OF COMPLIANCE		NRCC-LTO-E
Project Name: SGT. JOHN PINNEY MEMORIAL POOL REPLACEMENT	Report Page:	(Page 2 of 8)
	Date Prepared:	20-11-2024

C. COMPLIANCE RESULTS

Results in this table are automatically calculated from data input and calculations in Tables F through N. Note: if any cell on this table says "COMPLIES with Exceptional Conditions" refer to Table D. Exceptional Conditions for guidance or see applicable Table referenced below.

Calculations of Total Allowed Lighting Power (Watts) 140.7 / 170.2(e)6 or 141.0(b)2I. / 180.2(b)4Bv													Compliance Results		
01		02		03		04		05		06		07		08	09
General Hardscape Allowance 140.7(d)1 / 170.2(e)6 (See Table I)	+	Per Application 140.7(d)2 / 170.2(e)6 (See Table J)	+	Sales Frontage 140.7(d)2 (See Table K)	+	Ornamental 140.7(d)2 / 170.2(e)6 (See Table L)	+	Per Specific Area 140.7(d)2 / 170.2(e)6 (See Table M)	OR	Existing Power Allowance 141.0(b)2L / 180.2(b)4Bv (See Table N)	=	**Total Allowed** (Watts)	≥	**Total Actual** (Watts)	**07 must be >= 08**
272	+	---	+	---	+	---	+	27.4	OR	---	=	299	≥	254	COMPLIES

Shielding Compliance (See Table G for Details)	N/A
Controls Compliance (See Table H for Details)	COMPLIES

D. EXCEPTIONAL CONDITIONS

This table is auto-filled with uneditable comments because of selections made or data entered in tables throughout the form.

E. ADDITIONAL REMARKS

This table includes remarks made by the permit applicant to the Authority Having Jurisdiction.

Generated Date/Time: CA Building Energy Efficiency Standards - 2022 Nonresidential Compliance
Documentation Software: EnergyPro
Report Version: 2022.0.000 Schema Version: rev 20220101
Compliance ID: EnergyPro-5468-1124-1751 Report Generated: 2024-11-19 22:37:53

STATE OF CALIFORNIA
Outdoor Lighting
CALIFORNIA ENERGY COMMISSION

CERTIFICATE OF COMPLIANCE		NRCC-LTO-E
Project Name: SGT. JOHN PINNEY MEMORIAL POOL REPLACEMENT	Report Page:	(Page 3 of 8)
	Date Prepared:	20-11-2024

F. OUTDOOR LIGHTING FIXTURE SCHEDULE

For new or altered lighting systems demonstrating compliance with 140.7 / 170.2(e)6 all new luminaires being installed and any existing luminaires remaining or being moved within the spaces covered by the permit application are included in the Table below. For altered lighting systems using the Existing Power method per 141.0(b)2I, only new luminaires being installed and replacement luminaires being installed as part of the project scope are included (ie, existing luminaires remaining or existing luminaires being moved are not included). Outdoor lighting attached to multifamily buildings and controlled from the inside of a dwelling unit are included in Table H, and are not included here. All other multifamily outdoor lighting is included here.

Designed Wattage:

01	02		03	04	05	06	07	08	09	10	
Name or Item Tag	Complete Luminaire Description		Watts per luminaire[2, 3]	How is Wattage determined	Total Number Luminaires [3]	Luminaire Status[5]	Excluded per 140.7(a) / 170.2(e)6A	Design Watts	Cutoff Req. > 6,200 initial lumen output 130.2(b) / 160.5(c)[4]	Field Inspector	
										Pass	Fail
B1	B1- 6" Recessed downlight	☐ Linear	8.8	Mfr. Spec	5	New	☐	44	N/A; < 6200 lumens	☐	☐
F	F - Wallpack LED Fixture	☐ Linear	35	Mfr. Spec	6	New	☐	210	N/A; < 6200 lumens	☐	☐
					Total Design Watts:			254			

* NOTES: Selections with a * require a note in the space below explaining how compliance is achieved.
EX: Luminaire is lighting a statue; EXCEPTION 2 to 130.2(b)

[1] FOOTNOTES: Authority Having Jurisdiction may ask for Luminaire cut sheets to confirm wattage used for compliance per 130.0(c) / 160.5(b)
[2] For linear luminaires, wattage should be indicated as W/ft instead of Watts/luminaire. Total linear feet should be indicated in column 05 instead of number of luminaires.
[3] Select "New" for new luminaires in a new outdoor lighting project, or for added luminaires in an alteration. Select "Altered" for replacement luminaires in an alteration. Select "Existing to Remain" for existing luminaires within the project scope that are not being altered and are remaining. Select "Existing Reinstalled" for existing luminaires which are being removed and reinstalled as part of the project scope.
[4] Compliance with mandatory shielding requirements is required for luminaires with initial lumen output >= 6,200 unless exempted by 130.2(b)/ 160.5(c)

G. SHIELDING REQUIREMENTS (BUG)

This section does not apply to this project.

Generated Date/Time: CA Building Energy Efficiency Standards - 2022 Nonresidential Compliance
Documentation Software: EnergyPro
Report Version: 2022.0.000 Schema Version: rev 20220101
Compliance ID: EnergyPro-5468-1124-1751 Report Generated: 2024-11-19 22:37:53

STATE OF CALIFORNIA
Outdoor Lighting
CALIFORNIA ENERGY COMMISSION

CERTIFICATE OF COMPLIANCE		NRCC-LTO-E
Project Name: SGT. JOHN PINNEY MEMORIAL POOL REPLACEMENT	Report Page:	(Page 4 of 8)
	Date Prepared:	20-11-2024

H. OUTDOOR LIGHTING CONTROLS

This table demonstrates compliance with controls requirements for all new or altered luminaires installed as part of the permit application. For alteration projects, luminaires which are existing to remain (ie untouched) and luminaires which are removed and reinstalled (wiring only) do not need to be included in this table even if they are within the spaces covered by the permit application.
Outdoor lighting for nonresidential buildings, parking garages and common service areas in multifamily buildings must be documented separately from outdoor lighting attached to multifamily buildings and controlled from the inside of a dwelling unit

Mandatory Controls for Nonresidential Occupancies, Parking Garages & Common Areas in Multifamily Buildings

01	02	03	04	05	
Area Description	Shut-Off 130.2(c)1 / 160.5(c)	Auto-Schedule 130.2(c)2 / 160.5(c)	Motion Sensor 130.2(c)3 / 160.5(c)	Field Inspector	
				Pass	Fail
Exterior Lighting	Astronomical Timer	Provided	NA: Each Luminaire <= 40 Watts	☐	☐
Exterior Lobby	Astronomical Timer	Provided	NA: Each Luminaire <= 40 Watts	☐	☐

[1] FOOTNOTE: Text has been abbreviated, please refer to Table 160.5.4 to confirm compliance with the specific light source technologies listed.
[2] Authority having jurisdiction may ask for cutsheets or other documentation to confirm compliance of light source.
[3] Recessed luminaires marked for use in fire-rated installations, and recessed luminaires installed in non-insulated ceilings are excepted from ii and iii.

Generated Date/Time: CA Building Energy Efficiency Standards - 2022 Nonresidential Compliance
Documentation Software: EnergyPro
Report Version: 2022.0.000 Schema Version: rev 20220101
Compliance ID: EnergyPro-5468-1124-1751 Report Generated: 2024-11-19 22:37:53

STATE OF CALIFORNIA
Outdoor Lighting
CALIFORNIA ENERGY COMMISSION

CERTIFICATE OF COMPLIANCE		NRCC-LTO-E
Project Name: SGT. JOHN PINNEY MEMORIAL POOL REPLACEMENT	Report Page:	(Page 5 of 8)
	Date Prepared:	20-11-2024

I. LIGHTING POWER ALLOWANCE (per 140.7 / 170.2(e))

This table includes areas using allowance calculations per 140.7 / 170.2(e). General Hardscape Allowance is per Table 140.7-A/Table 170.2-A while "Use it or lose it" Allowances are per Table 140.7-B /Table 170.2-S. Indicate which allowances are being used to expand sections for user input. Luminaires that qualify for one of the "Use it or lose it" allowances shall not qualify for another "Use it or lose it" allowance. Outdoor lighting attached to multifamily buildings and controlled from the inside of a dwelling unit are included in Table H, and are not included here. All other multifamily outdoor lighting is included here.

01						
"Use it or lose it" Allowance (select all that apply) (select all that apply)						
☒ General Hardscape Allowance Table I (below)	☐ Per Application Table J	☐ Sales Frontage Table K	☐ Ornamental Table L	☒ Per Specific Area Table M		

Calculated General Hardscape Lighting Power Allowance per Table 140.7-A for Nonresidential & Hotel/Motel

02	03	04	05	06	07	08	09
Area Description	Area Wattage Allowance (AWA)		Linear Wattage Allowance (LWA)				Total General AWA + LWA (Watts)
	Illuminated Area (ft²)	Allowed Density (W/ft²)	Area Allowance (Watts)	Perimeter Length (lf)	Allowed Density (W/lf)	Linear Allowance (Watts)	
EXTERIOR LIGHTING	1303	0.019	24.8	312	0.2	46.8	72
				Initial Wattage Allowance for Entire Site (Watts):			200
				Instances of Initial Wattage Allowance (LZ 0 only)[1]			
				Total General Hardscape Allowance (Watts):			272

J. LIGHTING ALLOWANCE: PER APPLICATION

This section does not apply to this project.

K. LIGHTING ALLOWANCE: SALES FRONTAGE

This section does not apply to this project.

L. LIGHTING ALLOWANCE: ORNAMENTAL

This section does not apply to this project.

Generated Date/Time: CA Building Energy Efficiency Standards - 2022 Nonresidential Compliance
Documentation Software: EnergyPro
Report Version: 2022.0.000 Schema Version: rev 20220101
Compliance ID: EnergyPro-5468-1124-1751 Report Generated: 2024-11-19 22:37:53

STATE OF CALIFORNIA
Outdoor Lighting
CALIFORNIA ENERGY COMMISSION

CERTIFICATE OF COMPLIANCE		NRCC-LTO-E
Project Name: SGT. JOHN PINNEY MEMORIAL POOL REPLACEMENT	Report Page:	(Page 6 of 8)
	Date Prepared:	20-11-2024

M. LIGHTING ALLOWANCE: PER SPECIFIC AREA

This table includes areas using the wattage allowance per specific area from Table 140.7-B /Table 170.2-S. More than one specific area allowance may be taken in a single project, if applicable. However, multiple specific area allowances may not be taken for the exact same area on the site.

01	02	03	04	05	06	07	08	09	10
Area Description	Specific Area Type per Table 140.7-B	CALCULATED ALLOWANCE (Watts)			DESIGN WATTS				Additional Allowance (Watts)
		Specific Area (ft²)[1]	Allowed Density (W/ft²)	Extra Allowance (Watts)	Luminaire Name or Item Tag	Watts per Luminaire	# of Luminaires	Design Watts	
EXTERIOR LOBBY	NonSalesCanopy	200	0.1	27.4	B1	8.8	5	44	27.4
					Total Design Watts for this Area			44	
					Total Allowance (Watts) All Areas:				27.4

[1] FOOTNOTES: See Table 140.7-B /Table 170.2-S for rules for calculating the specific areas (ft²) for these additional lighting allowances.
[2] For luminaires indicated in Table F as linear, wattage in column 07 is W/ft instead of Watts/luminaire. Total linear feet should be indicated in column 08 instead of number of luminaires.

N. EXISTING CONDITIONS POWER ALLOWANCE (alterations only)

This section does not apply to this project.

O. DECLARATION OF REQUIRED CERTIFICATES OF INSTALLATION

Selections have been made based on information provided in this document. If any selection has been changed by permit applicant, an explanation should be included in Table E. Additional Remarks. These documents must be provided to the building inspector during construction and can be found online

Form/Title
NRCI-LTO-E - Must be submitted for all buildings

Generated Date/Time: CA Building Energy Efficiency Standards - 2022 Nonresidential Compliance
Documentation Software: EnergyPro
Report Version: 2022.0.000 Schema Version: rev 20220101
Compliance ID: EnergyPro-5468-1124-1751 Report Generated: 2024-11-19 22:37:53

STATE OF CALIFORNIA
Outdoor Lighting
CALIFORNIA ENERGY COMMISSION

CERTIFICATE OF COMPLIANCE		NRCC-LTO-E
Project Name: SGT. JOHN PINNEY MEMORIAL POOL REPLACEMENT	Report Page:	(Page 7 of 8)
	Date Prepared:	20-11-2024

P. DECLARATION OF REQUIRED CERTIFICATES OF ACCEPTANCE

Selections have been made based on information provided in this document. If any selection has been changed by permit applicant, an explanation should be included in Table E. Additional Remarks. These documents must be provided to the building inspector during construction and must be completed through an Acceptance Test Technician Certification Provider (ATTCP). For more information visit: http://www.energy.ca.gov/title24/attcp/providers.html

Form/Title	Systems/Spaces To Be Field Verified
NRCA-LTO-02-A - Must be submitted for all outdoor lighting controls except for alterations where controls are added to <= 20 luminaires.	Exterior Lighting; Exterior Lobby;

Generated Date/Time: CA Building Energy Efficiency Standards - 2022 Nonresidential Compliance
Documentation Software: EnergyPro
Report Version: 2022.0.000 Schema Version: rev 20220101
Compliance ID: EnergyPro-5468-1124-1751 Report Generated: 2024-11-19 22:37:53

STATE OF CALIFORNIA
Outdoor Lighting
CALIFORNIA ENERGY COMMISSION

CERTIFICATE OF COMPLIANCE		NRCC-LTO-E
Project Name: SGT. JOHN PINNEY MEMORIAL POOL REPLACEMENT	Report Page:	(Page 8 of 8)
Project Address: 205 S WARNER ST	Date Prepared:	20-11-2024

DOCUMENTATION AUTHOR'S DECLARATION STATEMENT

I certify that this Certificate of Compliance documentation is accurate and complete.

Documentation Author Name: Manan H. Christian	Documentation Author Signature:
Company: Budlong & Associates	Signature Date: 2024-11-20
Address: 400 W. Ventura Blvd Suite 240	CEA/ HERS Certification Identification (if applicable):
City/State/Zip: Camarillo CA 93010	Phone: (805) 987-4001

RESPONSIBLE PERSON'S DECLARATION STATEMENT

I certify the following under penalty of perjury, under the laws of the State of California:

1. The information provided on this Certificate of Compliance is true and correct.
2. I am eligible under Division 3 of the Business and Professions Code to accept responsibility for the building design or system design identified on this Certificate of Compliance (responsible designer)
3. My responsible design firm is responsible for the building design or system design identified on this Certificate of Compliance conform to the requirements of Title 24, Part 1 and Part 6 of the California Code of Regulations.
4. The building design features or system design features identified on this Certificate of Compliance are consistent with the information provided on other applicable compliance documents, worksheets, calculations, plans and specifications submitted to the enforcement agency for approval with this building permit application.
5. I will ensure that a completed signed copy of this Certificate of Compliance shall be made available with the building permit(s) issued for the building, and made available to the enforcement agency for all applicable inspections. I understand that a completed signed copy of this Certificate of Compliance is required to be included with the documentation the builder provides to the building owner at occupancy.

Responsible Designer Name: Manan H. Christian	Responsible Designer Signature:
Company: Budlong & Associates	Date Signed: 2024-11-20
Address: 400 W. Ventura Blvd Suite 240	License: E 22864
City/State/Zip: Camarillo CA 93010	Phone: (805) 987-4001

Generated Date/Time: CA Building Energy Efficiency Standards - 2022 Nonresidential Compliance
Documentation Software: EnergyPro
Report Version: 2022.0.000 Schema Version: rev 20220101
Compliance ID: EnergyPro-5468-1124-1751 Report Generated: 2024-11-19 22:37:53

AGENCY

REVIEWED FOR CODE COMPLIANCE BY: WILLDAN ENGINEERING

Approval of these plans & specifications shall not be construed to be a permit for, or an approval of any violation of any Federal, State, County or City laws or ordinances. One set of approved plans must be kept on the job until completion.

10:06:59 AM Jul 21, 2025

FLEWELLING & MOODY
architecture planning interiors

HEADQUARTERS OFFICE:
99 S. Lake Avenue, Suite 300
Pasadena, CA 91101
Phone: 323.543.8300
E-Mail: fm-pasadena@flewelling-moody.com

ANTELOPE VALLEY OFFICE:
1035 West Lancaster Boulvard
Lancaster, California 93534
Phone: 661.949.0771
E-Mail: fm-lancaster@flewelling-moody.com

An Employee Owned Corporation

ARCHITECT

CONSULTANT

Budlong
An MBE|SBE|DBE|LSBE Firm
Glendale|Downtown LA|Fremont|Camarillo
W W W . B U D L O N G . C O M
Job No. 23-140

REGISTERED PROFESSIONAL ENGINEER MANAN H. CHRISTIAN E 22864 ELECTRICAL STATE OF CALIFORNIA

Drawn by: Author
Check by: Checker

Revisions

No.	Date	Description
	01/26/24	100% DD
	03/01/24	50% CD
	05/09/24	90% CD
	08/05/24	100% CD
	11/25/24	100% CD V2
	01/31/25	100% CD V3

All dimensions must be checked at the job by the contractor who accepts full responsibility for their accuracy under the contract. These plans & the specifications in connection therewith have been prepared for a specific site. Any and all responsibility for their use in whole or in part on any other site is hereby disclaimed by Flewelling & Moody.

CITY OF RIDGECREST

SGT. JOHN PINNEY MEMORIAL POOL REPLACEMENT

205 S WARNER ST, RIDGECREST, CA 93555

Drawing Title

ELECTRICAL T-24 FORMS - OUTDOOR (STORAGE BUILDING)

Job No.	Sheet No.
3055-0100	**E7.04**
Date: 05/09/2025	

STATE OF CALIFORNIA
Electrical Power Distribution CALIFORNIA ENERGY COMMISSION

CERTIFICATE OF COMPLIANCE		NRCC-ELC-E
Project Name: SGT. JOHN PINNEY MEMORIAL POOL REPLACEMENT	Report Page:	(Page 1 of 6)
Project Address: 205 S WARNER ST	Date Prepared:	29-01-2025

This document is used to demonstrate compliance with mandatory requirements in 130.5, for electrical systems in newly constructed nonresidential and hotel/motel occupancies and 160.6 and 160.9 for electrical systems in newly constructed multifamily occupancies. Additions and alterations to electrical service systems in nonresidential and hotel/motel occupancies will also use this document to demonstrate compliance per 141.0(a) or 141.0(b)1F for alterations. For multifamily addition or alterations compliance will be documented per 180.1(a) or 180.2 (b)4bvii

A. GENERAL INFORMATION

01	Project Location (city)	RIDGECREST	02	Climate Zone	14
			03	Occupancy Types Within Project:	All Other OccupanciesOfficeSupport AreasWarehouse

B. PROJECT SCOPE

This table includes electrical systems that are within the scope of the permit application.

01	02	03	04	05	06	07
Electrical Service Designation/ Description	Scope of Work[1]	Rating[2] (kVA)	Utility Provided Metering System Exception to 130.5(a)/ 160.6(a)[3]	System subject to CA Elec Code Article 517 Exception to 130.5(a)and (b)	Demand Response Controls	Provides power to dwelling units/common living areas only in multifamily occupancy
DISTRIBUTION SECTION MS2	New electrical service equipment and meter	455	☐	☐	Where required, demand response controls must be specified which are capable of receiving and automatically responding to at least one standards based messaging protocol which enables demand response after receiving a demand response signal. Sections 120.2/ 160.3, 130.1/ 160.5, and 130.3/ 160.9, and mechanical, indoor lighting, and sign lighting Certificate of Compliance documents will indicate when demand response controls are required.	☐

[1] FOOTNOTES: Adding only new feeders and branch circuits triggers Voltage Drop (30.5(c)/160.6(c)), no other requirements from 130.5/160.6 are required.
[2] If common use areas in a multifamily are submetered, rating is for submeter size serving common use areas.
[3] Applicable if the utility company is providing a metering system that indicates instantaneous kW demand and kWh for a utility-defined period.

STATE OF CALIFORNIA
Electrical Power Distribution CALIFORNIA ENERGY COMMISSION

CERTIFICATE OF COMPLIANCE		NRCC-ELC-E
Project Name: SGT. JOHN PINNEY MEMORIAL POOL REPLACEMENT	Report Page:	(Page 2 of 6)
	Date Prepared:	29-01-2025

C. COMPLIANCE RESULTS

Results in this table are automatically calculated from data input and calculations in Tables F through J. Note: If any cell on this table says "COMPLIES with Exceptional Conditions" refer to Table D. Exceptional Conditions for guidance or see applicable Table referenced below.

01		02		03		04	05	06
Service Electrical Metering 130.5(a)/ 160.6(a) (See Table F)	AND	Separation for Monitoring 130.5(b)/ 160.6(b) (See Table G)	AND	Voltage Drop 130.5(c)/ 160.6(c) (See Table H)	AND	Controlled Receptacles 130.5(d)/ 160.6(d) (See Table I)	Electric Ready 160.9 (See Table J)	**Compliance Results**
Yes	AND	Yes	AND	Yes	AND	Yes		COMPLIES

D. EXCEPTIONAL CONDITIONS

This table is auto-filled with uneditable comments because of selections made or data entered in tables throughout the form.

E. ADDITIONAL REMARKS

This table includes remarks made by the permit applicant to the Authority Having Jurisdiction.

F. SERVICE ELECTRICAL METERING

This table includes new or replacement electrical service systems OR equipment to demonstrate compliance with 130.5(a) / 160.6(a). For multifamily occupancies, submetered systems that provide power to common use areas must meet the following metering requirements. Submetered systems providing power to dwelling units do not.

01	02	03			04	05	
Electrical Service Designation/ Description	Rating[1] (kVA)	Required Metering Capabilities per Table 130.5-A			Location of Requirements in Construction Documents	Field Inspector	
		Instantaneous Demand (kW)	Historical Peak Demand (kW)	Tracking kWh for user-defined period	kWh per rate period		Pass	Fail
DISTRIBUTION SECTION MS2	455	☒	☒	☒	☐	E0.02	☐	☐

[1] FOOTNOTES: If common use areas in a multifamily are submetered, rating is for submeter size serving common use areas.

STATE OF CALIFORNIA
Electrical Power Distribution CALIFORNIA ENERGY COMMISSION

CERTIFICATE OF COMPLIANCE		NRCC-ELC-E
Project Name: SGT. JOHN PINNEY MEMORIAL POOL REPLACEMENT	Report Page:	(Page 3 of 6)
	Date Prepared:	29-01-2025

G. SEPARATION OF ELECTRICAL CIRCUITS FOR ENERGY MONITORING

This table includes entirely new or complete replacement electrical power distribution systems to demonstrate compliance with 130.5(b)/ 160.6(b). Any load types that are not included in the service do not need to be shown. For multifamily occupancies, submetered systems that provide power to dwelling units do not need to meet these separation requirements and therefore load types on those submetered systems also do not need to be shown.

01	02	03	04	05	
Load Type per Table 130.5-B[1]	Minimum Required Separation of Load per Table 130.5-B	Compliance Method[2]	Location of Requirements in Construction Documents	Field Inspector	
				Pass	Fail
DISTRIBUTION SECTION MS2					
Lighting including exit, egress and exterior	All lighting disaggregated by floor, type or area	Method 3: Branch circuits serve load types individually & provisions for adding future branch curcuit monitoring	E0.04	☐	☐
HVAC systems and components	All HVAC in aggregate and each HVAC load rated at least 50 kVA	Method 3: Branch circuits serve load types individually & provisions for adding future branch curcuit monitoring	E0.04	☐	☐
Domestic and service water systems	All loads in aggregate	Method 3: Branch circuits serve load types individually & provisions for adding future branch curcuit monitoring	E0.04	☐	☐
Plug Loads and appliances less than 25kVA	All plug loads separated by floor, type or area Groups of plug loads exceeding 25 kVA connected load in an area less than 5000 sf	Method 3: Branch circuits serve load types individually & provisions for adding future branch curcuit monitoring	E0.04	☐	☐

STATE OF CALIFORNIA
Electrical Power Distribution CALIFORNIA ENERGY COMMISSION

CERTIFICATE OF COMPLIANCE		NRCC-ELC-E
Project Name: SGT. JOHN PINNEY MEMORIAL POOL REPLACEMENT	Report Page:	(Page 4 of 6)
	Date Prepared:	29-01-2025

G. SEPARATION OF ELECTRICAL CIRCUITS FOR ENERGY MONITORING

This table includes entirely new or complete replacement electrical power distribution systems to demonstrate compliance with 130.5(b)/ 160.6(b). Any load types that are not included in the service do not need to be shown. For multifamily occupancies, submetered systems that provide power to dwelling units do not need to meet these separation requirements and therefore load types on those submetered systems also do not need to be shown.

01	02	03	04	05	
Load Type per Table 130.5-B[1]	Minimum Required Separation of Load per Table 130.5-B	Compliance Method[2]	Location of Requirements in Construction Documents	Field Inspector	
				Pass	Fail
Other non-HVAC loads and appliances greater than or equal to 25kVA	All loads in aggregate	Method 3: Branch circuits serve load types individually & provisions for adding future branch curcuit monitoring	E0.04	☐	☐

** NOTES: If "Other**" is selected under Compliance Method above, please indicate how compliance has been achieved in the space provided below.*

[1] FOOTNOTES: For each separate load type, up to 10% of the connected load may be of any type.
[2] Method 1: Switchboards/ motor control centers/ panelboard loads disaggregated for each load type.
Method 2: Switchboards/ motor control centers/ panelboard supply other distribution equipment with loads disaggregated for each load type.
Method 3: Branch circuits serve load types individually and provisions for adding future branch circuit monitoring.
Method 4: Complete metering system measures and reports loads by type.
See Chapter 8 of the Nonresidential Compliance Manual for more detail on Compliance Methods.

H. VOLTAGE DROP

This table includes entirely new or complete replacement electrical power distribution systems, or alterations that add, modify or replace both feeders and branch circuits to demonstrate compliance with 130.5(c)/ 160.6(c). For alterations, only the altered circuits must demonstrate compliance per 141.0(b)2Pii/ 180.2(b)4bviic.

01	02			03	04	05	
Electrical Service Designation/Description	Combined Voltage Drop on Installed Feeder/Branch Circuit Conductors Compliance Method			Location of Voltage Drop Calculations?	Sheet Number for Voltage Drop Calculations in Construction Documents	Field Inspector	
						Pass	Fail
DISTRIBUTION SECTION MS2	☒	Voltage drop less than 5%	☐	Attached	E1.02	☐	☐
			Permitted by CA Elec Code (Exception to 130.5(c))*				

** NOTES: If "Permitted by CA Elec Code **" is selected under Compliance Method above, please indicate where the exception applies in the space provided below.*

STATE OF CALIFORNIA
Electrical Power Distribution CALIFORNIA ENERGY COMMISSION

CERTIFICATE OF COMPLIANCE		NRCC-ELC-E
Project Name: SGT. JOHN PINNEY MEMORIAL POOL REPLACEMENT	Report Page:	(Page 5 of 6)
	Date Prepared:	29-01-2025

H. VOLTAGE DROP

[1] FOOTNOTES: Voltage drop calculations may be attached to the permit application outside the construction documents if allowed by the Authority Having Jurisdiction. Select "attached" if applicable. If calculations will be the responsibility of the installing contractor, select "Contractor Responsible".

I. CIRCUIT CONTROLS FOR 120-VOLT RECEPTACLES AND CONTROLLED RECEPTACLES

This table includes entirely new or complete replacement electrical power distribution systems to demonstrate compliance with 130.5(d)/ 160.6(d). . Both controlled and uncontrolled receptacles must be provided in office areas, lobbies, conference rooms, kitchen areas in office spaces, copy rooms and hotel/motel guest rooms.

01	02	03	04	05	06	07	
Room name or Description	Location/ Type of Controlled Receptacles[1]	Shut-Off Controls	Demand Responsive Controls	Permanent Durable Marking Will be Used	Location of Requirements in Construction Documents	Field Inspector	
						Pass	Fail
ADMINISTRATION OFFICE	Split-wired receptacle	Other*	NA: Building does not require demand responsive lighting controls per 110.12(c)	☒		☐	☐
DISTRIBUTION SECTION MS2							

** NOTES: If "Other*" is selected under Shut-Off Controls above, please indicate how compliance has been achieved in the space provided below.*

[1] FOOTNOTES: Receptacles dedicated to refrigerators and water dispensers in kitchens, located a minimum of 6ft above the floor specifically for clocks, network copiers, fax machines, A/V and data equipment other than personal computers in copy rooms, circuits rated more than 20 Amps, or connected to a UPS that are intended to be in continuous use and are marked to differentiate them from other receptacles or circuits are excepted from the requirements..

J. ELECTRIC READY BUILDINGS

This section does not apply to this project.

K. DECLARATION OF REQUIRED CERTIFICATES OF INSTALLATION

Selections have been made based on information provided in this document. If any selection have been changed by permit applicant, an explanation should be included in Table E. Additional Remarks. These documents must be provided to the building inspector during construction and can be found online

Form/Title
NRCI-ELC-E - Must be submitted for all buildings

STATE OF CALIFORNIA
Electrical Power Distribution CALIFORNIA ENERGY COMMISSION

CERTIFICATE OF COMPLIANCE		NRCC-ELC-E
Project Name: SGT. JOHN PINNEY MEMORIAL POOL REPLACEMENT	Report Page:	(Page 6 of 6)
Project Address: 205 S WARNER ST	Date Prepared:	29-01-2025

DOCUMENTATION AUTHOR'S DECLARATION STATEMENT

I certify that this Certificate of Compliance documentation is accurate and complete.

Documentation Author Name: Manan H. Christian	Documentation Author Signature:
Company: Budlong & Associates	Signature Date: 2025-01-29
Address: 400 W. Ventura Blvd Suite 240	CEA/ HERS Certification Identification (if applicable):
City/State/Zip: Camarillo CA 93010	Phone: (805) 987-4001

RESPONSIBLE PERSON'S DECLARATION STATEMENT

I certify the following under penalty of perjury, under the laws of the State of California:

1. The information provided on this Certificate of Compliance is true and correct.
2. I am eligible under Division 3 of the Business and Professions Code to accept responsibility for the building design or system design identified on this Certificate of Compliance (responsible designer)
3. I am responsible for the building design or system design identified on this certificate of compliance. Any mandatory requirements, and manufactured devices for the building design or system design identified on this Certificate of Compliance conform to the requirements of Title 24, Part 1 and Part 6 of the California Code of Regulations.
4. The building design features or system design features identified on this Certificate of Compliance are consistent with the information provided on other applicable compliance documents, worksheets, calculations, plans and specifications submitted to the enforcement agency for approval with this building permit application.
5. I will ensure that a completed signed copy of this Certificate of Compliance shall be made available with the building permit(s) issued for the building, and made available to the enforcement agency for all applicable inspections. I understand that a completed signed copy of this Certificate of Compliance is required to be included with the documentation the builder provides to the building owner at occupancy.

Responsible Designer Name: Manan H. Christian	Responsible Designer Signature:
Company: Budlong & Associates	Date Signed: 2025-01-29
Address: 400 W. Ventura Blvd Suite 240	License: E 22864
City/State/Zip: Camarillo CA 93010	Phone: (805) 987-4001

AGENCY

REVIEWED FOR CODE COMPLIANCE BY: WILLDAN ENGINEERING

Approval of these plans & specifications shall not be construed to be a permit for, or an approval of any violation of any Federal, State, County or City laws or ordinances. One set of approved plans must be kept on the job until completion.

10:07:01 AM Jul 21, 2025

FLEWELLING & MOODY
architecture planning interiors

HEADQUARTERS OFFICE:
99 S. Lake Avenue, Suite 300
Pasadena, CA 91101
Phone: 323.543.8300
E-Mail: fm-pasadena@flewelling-moody.com

ANTELOPE VALLEY OFFICE:
1035 West Lancaster Boulvard
Lancaster, California 93534
Phone: 661.949.0771
E-Mail: fm-lancaster@flewelling-moody.com

An Employee Owned Corporation

ARCHITECT

CONSULTANT

Budlong
An MBE|SBE|DBE|LSBE Firm
Glendale|Downtown LA|Fremont|Camarillo
W W W . B U D L O N G . C O M
Job No. 23-140

REGISTERED PROFESSIONAL ENGINEER MANAN H. CHRISTIAN E 22864 01/30/25 ELECTRICAL POWER STATE OF CA

Drawn by: Author
Check by: Checker

Revisions

No.	Date	Description
	01/31/25	100% CD V3

All dimensions must be checked at the job by the contractor who accepts full responsibility for their accuracy under the contract. These plans & the specifications in connection therewith have been prepared for a specific site. Any and all responsibility for their use in whole or in part on any other site is hereby disclaimed by Flewelling & Moody.

CITY OF RIDGECREST

SGT. JOHN PINNEY MEMORIAL POOL REPLACEMENT

205 S WARNER ST, RIDGECREST, CA 93555

Drawing Title

ELECTRICAL T-24 FORMS - POWER DISTRIBUTION

Job No. 3055-0100
Date 05/09/2025
Sheet No. **E7.05**

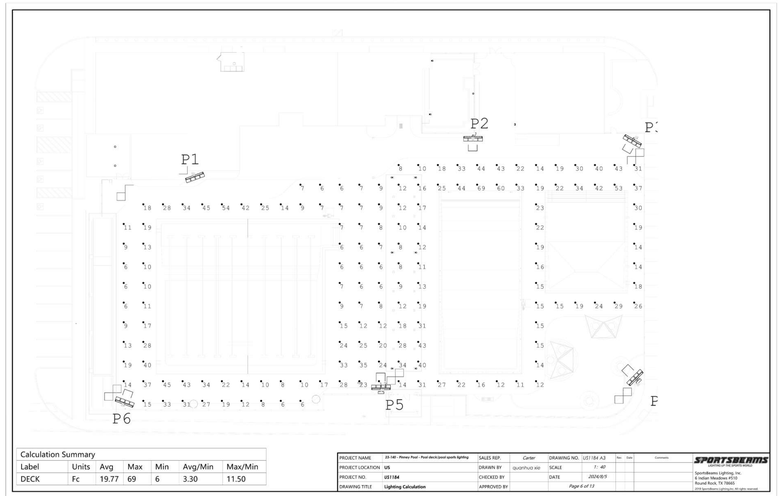

Calculation Summary						
Label	Units	Avg	Max	Min	Avg/Min	Max/Min
DECK	Fc	19.77	69	6	3.30	11.50

PROJECT NAME	23-140 - Pinney Pool - Pool deck/pool sports lighting	SALES REP.	Carter
PROJECT LOCATION	US	DRAWN BY	QUOHTUO XIII
PROJECT NO.	US1184	CHECKED BY	
DRAWING TITLE	Lighting Calculation	APPROVED BY	

SCALE 1" - 40'
DATE 2024/8/9
Page 4 of 13

SportsBeams Lighting, Inc.
6 Indian Meadows #310
Round Rock, TX 78665

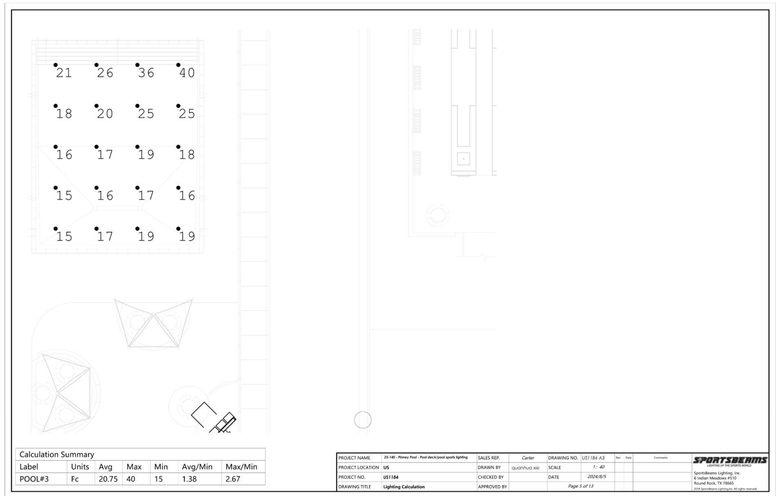

Calculation Summary						
Label	Units	Avg	Max	Min	Avg/Min	Max/Min
POOL#3	Fc	20.75	40	15	1.38	2.67

PROJECT NAME	23-140 - Pinney Pool - Pool deck/pool sports lighting	SALES REP.	Carter
PROJECT LOCATION	US	DRAWN BY	QUOHTUO XIII
PROJECT NO.	US1184	CHECKED BY	
DRAWING TITLE	Lighting Calculation	APPROVED BY	

SCALE 1" - 40'
DATE 2024/8/9
Page 3 of 13

SportsBeams Lighting, Inc.
6 Indian Meadows #310
Round Rock, TX 78665

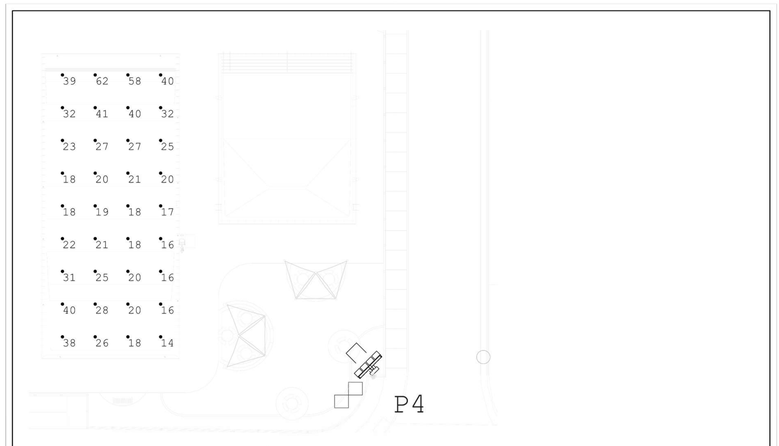

Calculation Summary						
Label	Units	Avg	Max	Min	Avg/Min	Max/Min
POOL#2	Fc	26.83	62	14	1.92	4.43

PROJECT NAME	23-140 - Pinney Pool - Pool deck/pool sports lighting	SALES REP.	Carter
PROJECT LOCATION	US	DRAWN BY	QUOHTUO XIII
PROJECT NO.	US1184	CHECKED BY	
DRAWING TITLE	Lighting Calculation	APPROVED BY	

SCALE 1" - 40'
DATE 2024/8/9
Page 4 of 13

SportsBeams Lighting, Inc.
6 Indian Meadows #310
Round Rock, TX 78665

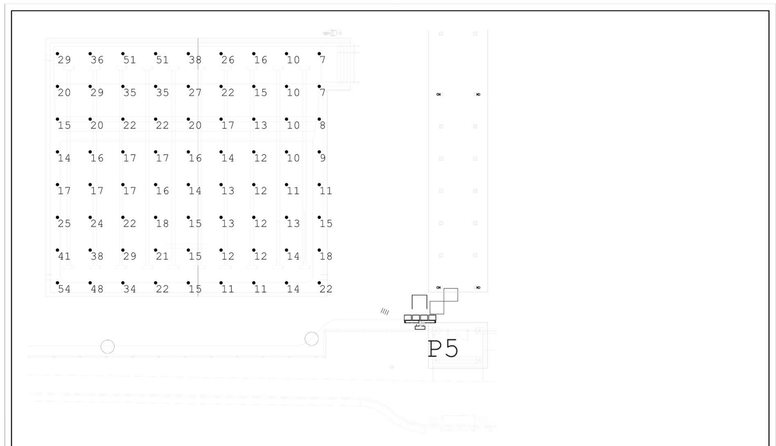

Calculation Summary						
Label	Units	Avg	Max	Min	Avg/Min	Max/Min
POOL#1	Fc	20.17	54	7	2.88	7.71

PROJECT NAME	23-140 - Pinney Pool - Pool deck/pool sports lighting	SALES REP.	Carter
PROJECT LOCATION	US	DRAWN BY	QUOHTUO XIII
PROJECT NO.	US1184	CHECKED BY	
DRAWING TITLE	Lighting Calculation	APPROVED BY	

SCALE 1" - 40'
DATE 2024/8/9
Page 3 of 13

SportsBeams Lighting, Inc.
6 Indian Meadows #310
Round Rock, TX 78665

Numeric Summary				
Obs	Label	CalcType	Max	Obs X	Obs Y
Obs	1	Glare Rating	39	45	36
Obs	2	Glare Rating	37	114	36
Obs	3	Glare Rating	38	164	67
Obs	4	Glare Rating	39	220	67
Obs	5	Glare Rating	34	192	106
Obs	6	Glare Rating	41	192	6

PROJECT NAME	23-140 - Pinney Pool - Pool deck/pool sports lighting	SALES REP.	Carter
PROJECT LOCATION	US	DRAWN BY	QUOHTUO XIII
PROJECT NO.	US1184	CHECKED BY	
DRAWING TITLE	Lighting Summary	APPROVED BY	

SCALE 1" - 40'
DATE 2024/8/9
Page 2 of 13

SportsBeams Lighting, Inc.
6 Indian Meadows #310
Round Rock, TX 78665

Luminaire Schedule					
Symbol	Qty	Tag	LLF	Lumens/Lamp	Description
	22	S350	0.950	39396	Sportsbeams LED 350W NEMA4 5700K CRI75 Visor

Calculation Summary						
Label	Units	Avg	Max	Min	Avg/Min	Max/Min
POOL#1	Fc	20.17	54	7	2.88	7.71
POOL#2	Fc	26.83	62	14	1.92	4.43
POOL#3	Fc	20.75	40	15	1.38	2.67
DECK	Fc	19.77	69	6	3.30	11.50

Luminaire Location Summary					
LumNo	Pole ID	Pole Number	Pole Height	Tag (Qty)	Fixture #/Pole
1	P1	1	30	S350 (1)	4
2	P2	1	30	S350 (1)	4
3	P3	1	30	S350 (1)	3
4	P4	1	30	S350 (1)	3
5	P5	1	30	S350 (1)	4
6	P6	1	30	S350 (1)	4
7	Total	6	30	S350 (1)	22

PROJECT NAME	23-140 - Pinney Pool - Pool deck/pool sports lighting	SALES REP.	Carter
PROJECT LOCATION	US	DRAWN BY	QUOHTUO XIII
PROJECT NO.	US1184	CHECKED BY	
DRAWING TITLE	Lighting Summary	APPROVED BY	

SCALE 1" - 40'
DATE 2024/8/9
Page 1 of 13

SportsBeams Lighting, Inc.
6 Indian Meadows #310
Round Rock, TX 78665

SPORTS LIGHTING PHOTOMETRICS, LIGHT FIXTURE AND POLE QUANTITIES

AGENCY

REVIEWED FOR CODE COMPLIANCE BY:
WILLDAN ENGINEERING

Approval of these plans & specifications shall not be construed to be a permit for, or an approval of any violation of any Federal, State, County or City laws or ordinances. One set of approved plans must be kept on the job until completion.

10:07:02 AM Jul 21, 2025

FLEWELLING & MOODY
architecture planning interiors

HEADQUARTERS OFFICE:
99 S. Lake Avenue, Suite 300
Pasadena, CA 91101
Phone: 323.543.8300
E-Mail: fm-pasadena@flewelling-moody.com

ANTELOPE VALLEY OFFICE:
1035 West Lancaster Boulevard
Lancaster, California 93534
Phone: 661.949.0771
E-Mail: fm-lancaster@flewelling-moody.com

An Employee Owned Corporation

ARCHITECT

CONSULTANT

Budlong
An MBE|SBE|DBE|LSBE Firm
Glendale|Downtown LA|Fremont|Camarillo
W W W . B U D L O N G . C O M
Job No. 23-140

REGISTERED PROFESSIONAL ENGINEER
JAMES H. CHRISTIAN
No. E 22864
Exp. 12/31/25
CIVIL
STATE OF CALIFORNIA

Drawn by: Author

Check by: Checker

Revisions

No.	Date	Description
	11/25/24	100% CD V2
	01/31/25	100% CD V3

All dimensions must be checked at the job by the contractor who accepts full responsibility for their accuracy under the contract. These plans & the specifications in connection therewith have been prepared for a specific site. Any and all responsibility for their use in whole or in part on any other site is hereby disclaimed by Flewelling & Moody.

CITY OF RIDGECREST

SGT. JOHN PINNEY MEMORIAL POOL REPLACEMENT

205 S WARNER ST, RIDGECREST, CA 93555

Drawing Title

SPORTS LIGHTING DRAWINGS

Job No. 3055-0100

Date 05/09/2025

Sheet No. E8.01

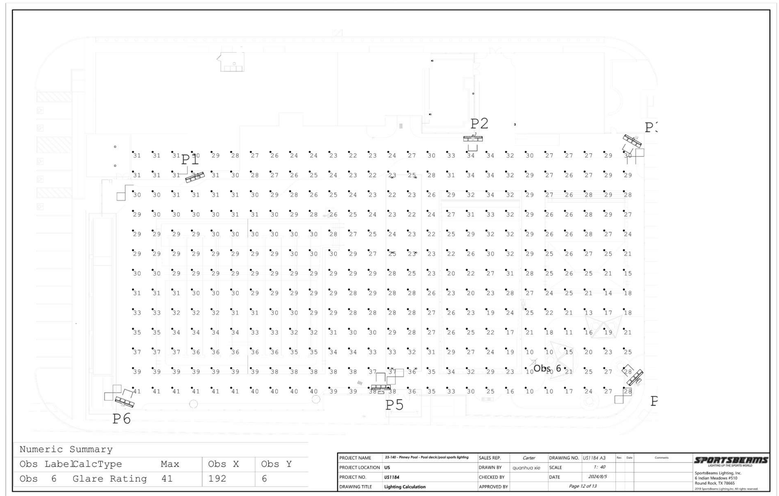

Numeric Summary

Obs	Label	CalcType	Max	Obs X	Obs Y
Obs	6	Glare Rating	41	192	6

PROJECT NAME	23-140 - Pinney Pool - Pool deck/pool sports lighting	SALES REP.	Carter	DRAWING NO.	LIT-1184 A3
PROJECT LOCATION	US	DRAWN BY	QUOHTUO XXII	SCALE	1' - 40"
PROJECT NO.	LIT-1184	CHECKED BY		DATE	JDN/8/9
DRAWING TITLE	Lighting Calculation	APPROVED BY		Page 12 of 13	

SPORTSBEAMS — Sportsbeams Lighting, Inc. — 6 Indian Meadows #310 — Round Rock, TX 78665

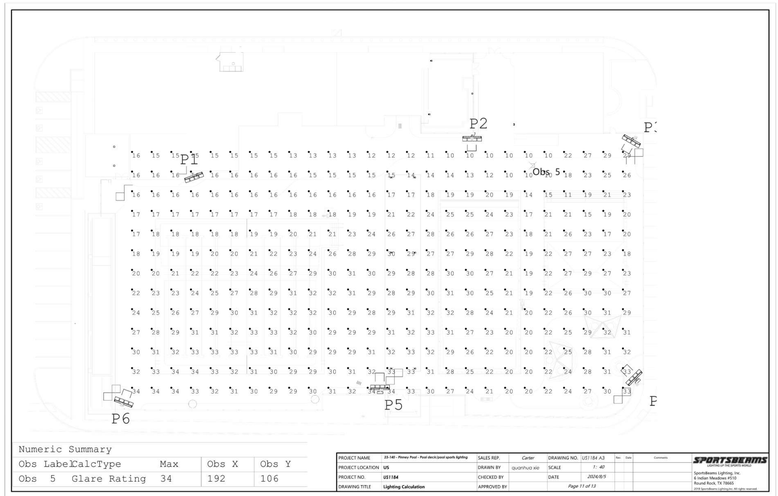

Numeric Summary

Obs	Label	CalcType	Max	Obs X	Obs Y
Obs	5	Glare Rating	34	192	106

PROJECT NAME	23-140 - Pinney Pool - Pool deck/pool sports lighting	SALES REP.	Carter	DRAWING NO.	LIT-1184 A3
PROJECT LOCATION	US	DRAWN BY	QUOHTUO XXII	SCALE	1' - 40"
PROJECT NO.	LIT-1184	CHECKED BY		DATE	JDN/8/9
DRAWING TITLE	Lighting Calculation	APPROVED BY		Page 11 of 13	

SPORTSBEAMS — Sportsbeams Lighting, Inc. — 6 Indian Meadows #310 — Round Rock, TX 78665

Numeric Summary

Obs	Label	CalcType	Max	Obs X	Obs Y
Obs	4	Glare Rating	39	220	67

PROJECT NAME	23-140 - Pinney Pool - Pool deck/pool sports lighting	SALES REP.	Carter	DRAWING NO.	LIT-1184 A3
PROJECT LOCATION	US	DRAWN BY	QUOHTUO XXII	SCALE	1' - 40"
PROJECT NO.	LIT-1184	CHECKED BY		DATE	JDN/8/9
DRAWING TITLE	Lighting Calculation	APPROVED BY		Page 10 of 13	

SPORTSBEAMS — Sportsbeams Lighting, Inc. — 6 Indian Meadows #310 — Round Rock, TX 78665

Numeric Summary

Obs	Label	CalcType	Max	Obs X	Obs Y
Obs	3	Glare Rating	38	164	67

PROJECT NAME	23-140 - Pinney Pool - Pool deck/pool sports lighting	SALES REP.	Carter	DRAWING NO.	LIT-1184 A3
PROJECT LOCATION	US	DRAWN BY	QUOHTUO XXII	SCALE	1' - 40"
PROJECT NO.	LIT-1184	CHECKED BY		DATE	JDN/8/9
DRAWING TITLE	Lighting Calculation	APPROVED BY		Page 9 of 13	

SPORTSBEAMS — Sportsbeams Lighting, Inc. — 6 Indian Meadows #310 — Round Rock, TX 78665

Numeric Summary

Obs	Label	CalcType	Max	Obs X	Obs Y
Obs	2	Glare Rating	37	114	36

PROJECT NAME	23-140 - Pinney Pool - Pool deck/pool sports lighting	SALES REP.	Carter	DRAWING NO.	LIT-1184 A3
PROJECT LOCATION	US	DRAWN BY	QUOHTUO XXII	SCALE	1' - 40"
PROJECT NO.	LIT-1184	CHECKED BY		DATE	JDN/8/9
DRAWING TITLE	Lighting Calculation	APPROVED BY		Page 8 of 13	

SPORTSBEAMS — Sportsbeams Lighting, Inc. — 6 Indian Meadows #310 — Round Rock, TX 78665

Numeric Summary

Obs	Label	CalcType	Max	Obs X	Obs Y
Obs	1	Glare Rating	39	45	36

PROJECT NAME	23-140 - Pinney Pool - Pool deck/pool sports lighting	SALES REP.	Carter	DRAWING NO.	LIT-1184 A3
PROJECT LOCATION	US	DRAWN BY	QUOHTUO XXII	SCALE	1' - 40"
PROJECT NO.	LIT-1184	CHECKED BY		DATE	JDN/8/9
DRAWING TITLE	Lighting Calculation	APPROVED BY		Page 7 of 13	

SPORTSBEAMS — Sportsbeams Lighting, Inc. — 6 Indian Meadows #310 — Round Rock, TX 78665

SPORTS LIGHTING PHOTOMETRICS

AGENCY

REVIEWED FOR CODE COMPLIANCE BY: WILLDAN ENGINEERING

Approval of these plans & specifications shall not be construed to be a permit for, or an approval of any violation of any Federal, State, County or City laws or ordinances. One set of approved plans must be kept on the job until completion.

10:07:04 AM Jul 21, 2025

FLEWELLING & MOODY
architecture planning interiors

HEADQUARTERS OFFICE:
99 S. Lake Avenue, Suite 300
Pasadena, CA 91101
Phone: 323.543.8300
E-Mail: fm-pasadena@flewelling-moody.com

ANTELOPE VALLEY OFFICE:
1035 West Lancaster Bouldvard
Lancaster, California 93534
Phone: 661.949.0771
E-Mail: fm-lancaster@flewelling-moody.com

An Employee Owned Corporation

ARCHITECT

CONSULTANT

Budlong
An MBE|SBE|DBE|LSBE Firm
Glendale|Downtown LA|Fremont|Camarillo
W W W . B U D L O N G . C O M
Job No. 23-140

REGISTERED PROFESSIONAL ENGINEER — JAMES N. CHRISTIAN — No. E 22864 — CIVIL — STATE OF CALIFORNIA

Drawn by: Author

Check by: Checker

Revisions

No.	Date	Description
	11/25/24	100% CD V2
	01/31/25	100% CD V3

All dimensions must be checked at the job by the contractor who accepts full responsibility for their accuracy under the contract. These plans & the specifications in connection therewith have been prepared for a specific site. Any and all responsibility for their use in whole or in part on any other site is hereby disclaimed by Flewelling & Moody.

CITY OF RIDGECREST

SGT. JOHN PINNEY MEMORIAL POOL REPLACEMENT

205 S WARNER ST, RIDGECREST, CA 93555

Drawing Title

SPORTS LIGHTING DRAWINGS

Job No. 3055-0100

Date 05/09/2025

Sheet No. **E8.02**

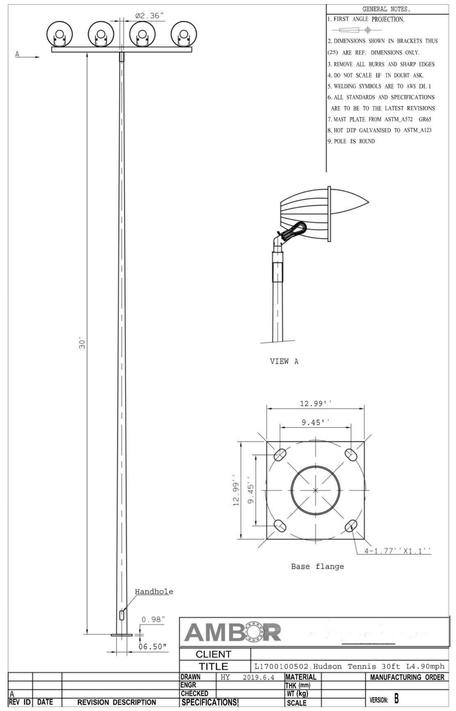

SPORTS LIGHT POLE SPECS

COURT LED 350

SPORTSBEAMS

PROJECT NAME:	TYPE:
PREPARED BY:	DATE:

DRIVER INFO:

Type	Constant Current
90V - 305V	Available
249V - 528V	Available
Input Watts	350W
Current Range	6.7A
Output DC	24V - 64V
Efficiency	92%
THD	<20%

LED INFO:

Watts	320W
Color Temp	2200 to 6500
Color Accuracy	70 to 90+ CRI
L70 Lifespan	100,000
Maximum Lumen	44,695
Efficacy	131 LPW

DIMENSIONS

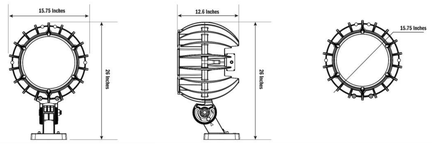

TECHNICAL SPECIFICATIONS

CERTIFICATIONS

UL Listing:
Suitable for wet locations.

Other Certifications:
CE, ETL, ROHS, LM79, 3G, UL, ik08, CB, KC

OPTICAL

Optics Types:
Symmetrical
Asymmetrical (w/visor)

NEMA Types:
NEMA 4, NEMA 5, NEMA 6, NEMA 7

LED

Dimming:
2 ~ 100%

Flicker:
<1%

CONSTRUCTION

IP Rating:
Ingress protection rating of IP66 for dust and water

Maximum Ambient Temperature:
Suitable for use in 122°F

Effective Projected Area:
EPA ~ .82 with visor, .91 without visor

Weight:
37lbs

Thermal Management:
Passively Cooled

Lens:
Tempered glass, transparent & diffusive

Housing:
Aluminum Alloy

Mounting:
High grade steel yoke mount

Reflector:
Parabolic Reflector

ELECTRICAL

Ballast Volts:
90-305V & 320-525V

Drivers:
Constant Current, 1050mA, 50/60Hz, 249-528V, 4kV surge protection, 480V: 0.8A, THD < 20%

Power Factor:
>0.90

OTHER

Warranty:
10 Years Standard, Others Available

Visor:
Included

SPORTSBEAMS — COURT LED 350

MOUNTING OPTIONS



TOP MOUNT — UNDERSLUNG — PENDANT MOUNT

ORDERING MATRIX

WATTAGE	NEMA TYPE	COLOR TEMP	CRI	DRIVER OPTION	FINISH
SB	350	5	5000	70	277	G
	4 = 4H x 4V	**2200** = 2200k	**70** = 70CRI	**277** = 90V - 305V	**G** = Gray
	5 = 5H x 5V	**2700** = 2700k	**80** = 80CRI	**480** = 249V - 528V	**B** = Brown
	6 = 6H x 6V	**3000** = 3000k	**90** = 90CRI		
	7 = 7H x 7V	**3500** = 3500k			
		4000 = 4000k			
		4500 = 4500k			
		5000 = 5000k			
		5700 = 5700k			
		6500 = 6500k			

SAMPLE SKU
SB350-5-5000-70-480-G

KEY FEATURES

- 320W LED illumination
- 44,600+ lumens delivered
- No plastics used in the light path
- 0 to 10V capability
- Glare-reducing, patented single glass optic for even field lighting
- High 90+ CRI color fidelity option
- Built-in over temperature protection
- IP-66 weather-tight housing & system
- Patented cooling ensures years of uninterrupted service
- 100,000+ hour rated LEDs
- IP-67 proprietary power supply with surge protection

NO GLARE
Athletes can see the action with our lights. Our single, glass optic lights every playing surface evenly with smooth, clear light.

44,600 LUMENS
The Sportsbeams Court LED 350 delivers a powerful 44,600 lumen beam efficiently and with significant control.

VARIOUS COLOR TEMPERATURES
While our standard color temperature is 5000k, we can produce custom orders with temperatures ranging from 2200k to 6500k.

ABSOLUTELY RUGGED
Like all of our fixtures, the Sportsbeams Court LED 350 is built for all outdoor conditions. We do complete salt spray and 3G (shock & vibe) tests from verified laboratories.

ADVANCED COOLING SYSTEM
Our advanced cooling system ensures that the Sportsbeams Court LED 350 will operate consistently, year after year. Heat destroys LED fixtures fast. Our design stops damaging heat in its tracks.

©SPORTSBEAMS LIGHTING, INC 3500DUOS-201008

SPORTS LIGHT FIXTURE SPECS

NOTE : REFER TO STRUCTURAL PLANS AND DETAILS FOR SPORTS LIGHTING FOUNDATION REQUIREMENTS

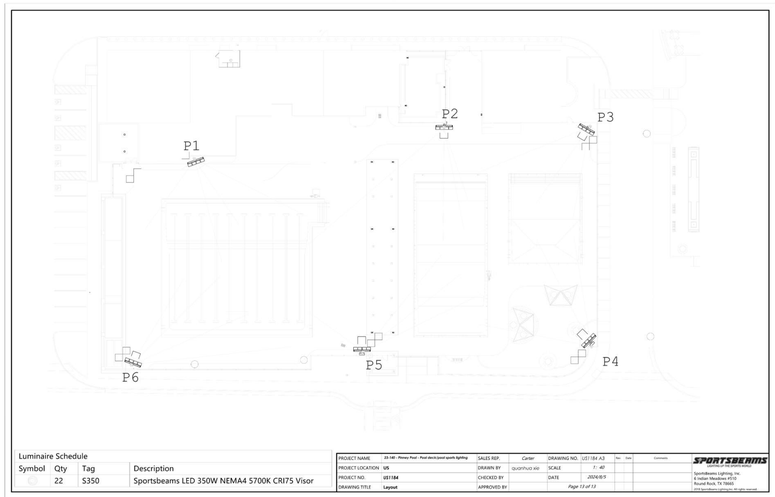

Luminaire Schedule

Symbol	Qty	Tag	Description
	22	S350	Sportsbeams LED 350W NEMA4 5700K CRI75 Visor

PROJECT NAME	23-140 - Pinney Pool - Pool deck/pool sports lighting	SALES REF.	Carter
PROJECT LOCATION	US	DRAWN BY	QUOPPLO XXI
PROJECT NO.	US1164	CHECKED BY	
DRAWING TITLE	Layout	APPROVED BY	
DRAWING NO.	LLT-164 A3	SCALE	1' - 40'
DATE	2024-10-17		

SPORTSBEAMS — QUANTITY OF THE SPORTS WORLD
Sportsbeams Lighting, Inc.
6 Hutton Meadows #310
Red Bluff, CA 96080

Page 13 of 13

SPORTS LIGHTING PHOTOMETRICS

AGENCY

REVIEWED FOR CODE COMPLIANCE BY: WILLDAN ENGINEERING

Approval of these plans & specifications shall not be construed to be a permit for, or an approval of any violation of any Federal, State, County or City laws or ordinances. One set of approved plans must be kept on the job until completion.

10:07:06 AM Jul 21, 2025

FLEWELLING & MOODY
architecture planning interiors

HEADQUARTERS OFFICE:
99 S. Lake Avenue, Suite 300
Pasadena, CA 91101
Phone: 323.543.8300
E-Mail: fm-pasadena@flewelling-moody.com

ANTELOPE VALLEY OFFICE:
1035 West Lancaster Boulevard
Lancaster, California 93534
Phone: 661.949.0771
E-Mail: fm-lancaster@flewelling-moody.com

An Employee Owned Corporation

ARCHITECT

CONSULTANT

Budlong
An MBE|SBE|DBE|LSBE Firm
Glendale|Downtown LA|Fremont|Camarillo
WWW.BUDLONG.COM
Job No. 23-140

REGISTERED PROFESSIONAL ENGINEER — ARAM H. CHRISTIAN — No. EE 22564 — ELECTRICAL — STATE OF CA

Drawn by: Author
Check by: Checker
Revisions

No.	Date	Description
	11/25/24	100% CD V2
	01/31/25	100% CD V3

All dimensions must be checked at the job by the contractor who accepts full responsibility for their accuracy under the contract. These plans & the specifications in connection therewith have been prepared for a specific site. Any and all responsibility for their use in whole or in part on any other site is hereby disclaimed by Flewelling & Moody.

CITY OF RIDGECREST

SGT. JOHN PINNEY MEMORIAL POOL REPLACEMENT

205 S WARNER ST, RIDGECREST, CA 93555

Drawing Title

SPORTS LIGHTING DRAWINGS

Job No. 3055-0100

Sheet No. **E8.03**

Date 05/09/2025

GENERAL NOTES

A. BEFORE STARTING ANY WORK, VERIFY THE ADEQUACY, LOCATION, SIZE, AND AVAILABILITY OF ALL UTILITIES CONCERNED, INCLUDING SEWER INVERT ELEVATIONS, AND WATER PRESSURE.

B. THE CONTRACTOR SHALL COORDINATE WITH ALL OTHER TRADES FOR CLEARANCES AND WORK INCLUDED PRIOR TO START OF WORK.

C. ALL VENTS THRU ROOF SHALL BE MINIMUM OF THREE FEET VERTICALLY OR NO LESS THAN 10 FEET HORIZONTALLY FROM ANY FRESH AIR INTAKES.

D. CLEANOUTS SHALL BE INSTALLED PER CODE REQUIREMENTS.

E. PROVIDE NON AERATOR LAMINAR FLOW RESTRICTOR ON ALL LAVATORY FAUCETS.

F. PENETRATIONS OF RATED ASSEMBLIES SHALL BE FIRE STOPPED. FIRE STOPPING SHALL BE AN APPROVED MATERIAL AS PRESCRIBED IN STATE. FIRE MARSHALL STANDARD 43-1, AND SHALL BE U.L. LISTED.

G. COORDINATE WITH ELECTRICAL SECTION PRIOR TO ORDERING EQUIPMENT FOR AVAILABLE VOLTAGE AT EQUIPMENT LOCATIONS.

H. ALL FIXTURES SHALL BE PROTECTED DURING CONSTRUCTION FROM ANY DAMAGE. REFINISHED FIXTURES WILL NOT BE ACCEPTABLE UNDER ANY CONDITIONS.

I. HANDICAPPED USE PLUMBING FIXTURES SHALL BE MOUNTED AT REQUIRED HEIGHTS AND WITH ALL RELATED ACCESSORIES AS REQUIRED BY THE ADMINISTRATIVE AUTHORITIES.

J. EXPOSED SUPPLY PIPES, TRAP AND TRAP ARM AT HANDICAPPED LAVATORIES AND SINK SHALL BE INSULATED.

K. ALL PIPING SHALL BE SUPPORTED IN ACCORDANCE WITH "GUIDELINES FOR RESTRAINTS OF MECHANICAL SYSTEMS, PLUMBING PIPING SYSTEMS" PUBLISHED BY SMACNA.

L. ALL DOMESTIC WATER FIXTURES, PIPING VALVES, ETC. FOR HUMAN CONSUMPTION SHALL COMPLY WITH CALIFORNIA HEALTH AND SAFETY CODE 116875.

M. THESE PLANS ARE DIAGRAMMATIC AND SHALL NOT BE SCALED TO ESTABLISH LOCATION OF WORK. THE CONTRACTOR SHALL PROVIDE SHOP DRAWINGS BASED ON EXISTING FIELD CONDITIONS AND MAKE ADJUSTMENTS AS NECESSARY FOR THE LOCATIONS, ACTUAL EQUIPMENT TO BE INSTALLED, AND THE MANUFACTURER'S REQUIRED CLEARANCES TO ASSURE PROPER FUNCTIONALITY, CONSTRUCTABILITY, AND CODE COMPLIANCE.

N. ANY EQUIPMENT, DUCTWORK, OR PIPING INSTALLED MORE THAN 1'-0" FROM THE LOCATION SHOWN ON THE DRAWINGS SHALL BE CLEARLY DOCUMENTED IN THE FIELD. CONTRACTOR SHALL PROVIDE AS-BUILT DRAWINGS IN AUTOCAD OR REVIT COMPATIBLE FORMAT THAT CLEARLY SHOW THE LOCATION OF THE EQUIPMENT BEFORE THE COMPLETION OF THE PROJECT. ALL EXPENSE RELATING TO VERIFICATION OF THE AS-BUILT DRAWINGS BY THE DISTRICT OR ITS REPRESENTATIVE(S) DUE TO INACCURATE OR INCOMPLETE RECORD SHALL BE BORNE BY THE CONTRACTOR.

O. ALL HOSE BIBBS SHALL BE EQUIPPED WITH AN APPROVED NON-REMOVABLE VACUUM BREAKER CPC 603.5.7

P. EMERGENCY EYEWASH AND SHOWER EQUIPMENT SHALL COMPLY WITH ISEA Z358.1. THE TEMPERATURE OF THE WATER SUPPLY SHALL BE CONTROLLED BY A TEMPERATURE ACTUATED MIXING VALVE COMPLYING WITH ASSE 1071. THE FLOW RATE, DISCHARGE PATTERN AND TEMPERATURE OF FLUSHING FLUIDS SHALL BE PROVIDED IN ACCORDANCE WITH ISEA Z358.1.416.0 CPC.

Q. FOR POOL EQUIPMENT ROOM TO PROVIDE CPVC ACID WASTE/VENT CHARLOTTE ACID WASTE/VENT AS REQUIRED PER CODE.

R. EACH HORIZONTAL VENT SHALL RISE VERTICALLY TO A POINT NOT LESS THAN 6 INCHES IN HEIGHT ABOVE THE FLOOD RIM LEVEL OF THE FIXTURE BEFORE BEING CONNECTED TO ANY OTHER VENT. CPC 905.3

S. POTABLE WATER SUPPLY TRAP SEAL PRIMER VALVES SHALL COMPLY WITH ASSE 1018, DRAINAGE AND ELECTRONIC DESIGN TYPE SEAL PRIMER DEVICES SHALL COMPLY WITH ASSE 1044. 1007.2

T. POTABLE WATER SYSTEM SHALL BE DISINFECTED PRIOR TO USE ACCORDING TO SECTION 609.9(1-3) CPC.

U. GAS APPLIANCES OTHER THAN NATURAL DRAFT DESIGN AND OTHER CATEGORY 1 VENTED APPLIANCES SHALL BE PROVIDED WITH COMBUSTION, VENTILATION, AND DILUTION AIR IN ACCORDANCE WITH THE APPLIANCE MANUFACTURER'S INSTRUCTIONS 506.1.1. COMBUSTION AIR INTAKE OPENINGS SHALL BE COVERED WITH A SCREEN NOT LESS THAN 1/4" MESH. 506.8.1.

V. ALL EXPOSED GAS PIPING SHALL BE PROTECTED AGAINST CORROSION BY COATING OR WRAPPING WITH AN INERT MATERIAL APPROVED FOR SUCH APPLICATIONS. 1210.2.

PIPE AND FITTING MATERIALS

TYPE	SIZE	MATERIAL	FITTINGS	LOCATION
CW, HW, CONDENSATE, HWR	ALL	TYPE "L" HARD COPPER	WROUGHT COPPER	ABOVE GRADE
	ALL	TYPE "K" HARD COPPER	WROUGHT COPPER SILVER BRAZED	BELOW GRADE
	ALL	CPVC SCH. 40 ASTM D2846, ASTM F441, ASTM F442	SOLDERED SOLVENT CEMENT FITTINGS ASTM B16.15	ABOVE GRADE IN POOL CHEMICAL ROOMS ONLY
WASTE AND VENT & STORM DRAIN	ALL	NO-HUB CAST IRON	NO-HUB CAST IRON	ABOVE GRADE
		BELL & SPIGOT CAST IRON	BELL & SPIGOT CAST IRON	BELOW GRADE
GAS	ALL	SCH. 40 ASTM A53 BLACK STEEL	MALLEABLE FITTINGS	ABOVE GRADE
	ALL	POLYPROPYLENE	MALLEABLE FITTINGS	BELOW GRADE

PLUMBING FIXTURE SCHEDULE

FIXTURE NUMBER	FIXTURE	W	V	T	CW	HW	REMARKS
WC-1	WATER CLOSET	4"	2"	INT.	1-1/2"	-	SLOAN #WETS-2451.1201, ADA-WALL MOUNTED, WHITE, VITREOUS CHINA, BEMIS#1955SSTFR SELF SUSTAINING CHECK HINGES TOILET SEAT,1.1 GPF FLUSHOMETER VALVE, JR SMITH FIG 0410D COMPACT FIXTURE SUPPORT BACK TO BACK VERTICAL ADJUSTABLE CARRIER.
WC-2	WATER CLOSET	4"	2"	INT.	1-1/2"	-	SLOAN #WETS-2451.1201, WALL MOUNTED, WHITE, VITREOUS CHINA, BEMIS#1955SSTFR SELF SUSTAINING CHECK HINGES TOILET SEAT,1.1 GPF FLUSHOMETER VALVE, JR SMITH FIG 0410D COMPACT FIXTURE SUPPORT INDUSTRY STANDARD BACK TO BACK HORIZONTAL ADJUSTABLE CARRIER.
U-1	URINAL	2"	1-1/2"	INT.	1-1/2"	-	SLOAN #HYB-1000, ADA-WALL MOUNTED, WHITE, VITREOUS CHINA, HYBRID URINAL 1 GALLON EVERY 72 HOURS, WATT DRAINAGE CA--311 EPOXY COATED FLOOR MOUNTED CARRIER.
U-2	URINAL	2"	1-1/2"	INT.	1-1/2"	-	SLOAN #HYB-1000, WALL MOUNTED, WHITE, VITREOUS CHINA, HYBRID URINAL 1 GALLON EVERY 72 HOURS, WATT DRAINAGE CA--311 EPOXY COATED FLOOR MOUNTED CARRIER.
SH-1	SHOWER	2"	1-1/2"	2"	1/2"	1/2"	CHICAGO #SH-TP4-04-000 , THERMOSTATIC / PRESSURE BALANCING, WALL MOUNTED FIXED SHOWER HEAD WITH, 1.5 GPM FLOW, INTEGRAL SERVICE STOPS.
SH-2	SHOWER	2"	1-1/2"	2"	1/2"	1/2"	CHICAGO #SH-PB1-16-011 , THERMOSTATIC / PRESSURE BALANCING, SHOWER HEAD AND WALL FLANGE, 1.5 GPM HAND SPRAY, 59" STAINLESS STEEL HOSE, DIVERTER VALVE, 24" SLIDE BAR, INTEGRAL SERVICE STOPS.
SH-3	SHOWER	2"	1-1/2"	2"	-	3/4"	ACORN #900, SINGLE STATION, TYPE 304 STAINLESS STEEL PYLON SHOWER, 1.6 GPM SHOWER HEAD FLOW RATE, 6'-0" SHOWER HEAD DISCHARGE HEIGHT, SINGLE TEMPERATURE FLO-CLOZ PUSH BUTTON CONTROL VALVE.
SH-4	SHOWER	2"	1-1/2"	2"	-	3/4"	ACORN #900-FX, SINGLE STATION, TYPE 304 STAINLESS STEEL PYLON SHOWER, HAND SHOWER WITH 60" STAINLESS STEEL HOSE 1.6 GPM FLOW RATE, 6'-0" SHOWER HEAD DISCHARGE HEIGHT, SINGLE TEMPERATURE FLO-CLOZ PUSH BUTTON CONTROL VALVE MOUNTED AT ADA REQMT'S.
L-1, 2, 3, & 4	LAVATORY	2"	1-1/2"	1-1/4" x 1-1/2"	1/2"	1/2"	BRADLEY #LD-5010, TERREON SOLID SURFACE WALL HUNG LAVATORY, ADA BASIN, WITH WASHBAR 1 FAUCET WITH WATER TEMPERING VALVE TMA #S08-2401TMA, WALL MOUNTING BRACKETS, FRONT ACCESS PANEL APRON, SOAP DISPENSER, HAND DRYER. MAXIMUM 0.20 GAL / CYCLE. SELF CLOSING FAUCET. L-1 = 1 PERSON, P-2 = 2 PERSON, L-3 = 3 PERSON, L-4 = 4 PERSON
KS-1	KITCHEN SINK	2"	1-1/2"	1-1/2"	1/2"	1/2"	JUST #NSFB354-J, FREE-STANDING, TRIPLE COMPARTMENT, 14 GAUGE 304 STAINLESS STEEL, JUST #JS-47-TGSA, 8" CENTERS BACKSPLASH MOUNT WITH POLISHED CHROME PLATED SOLID BRASS BODY, GOOSNECK SPOUT, 4" WRIST BLADE HANDLES, 1.5 GPM FLOW RATE.
S-1	SINK	2"	1-1/2"	2"	3/4"	3/4"	JUST #SLADA2131A60-J, 18 GAUGE, TYPE 304 STAINLESS STEEL, DROP-IN; FAUCET: CHICAGO #116.658.AB.1T, 1.5 GPM LAMINAR FLOW CONTROL OUTLET, 5-1/4" GOOSENECK SPOUT.
S-2	SINK	2"	1-1/2"	1-1/2"	1/2"	1/2"	JUST#SL-1515-A-GR,SINGLE BOWL, FAUCET: CHICAGO #116.658.AB.1T, 1.5 GPM LAMINAR FLOW CONTROL OUTLET, 5-1/4" GOOSENECK SPOUT.
SS-1	SERVICE SINK	3"	2"	3"	3/4"	3/4"	JUST #B33213-J MOP SERVICE BASIN 24x24,STAINLESS STEEL,2" BRASS CAULK DRAIN REMOVABLE GRID STRAINER. CHICAGO #897-CCP, WALL MOUNT, 8" BODY WITH ADJUSTABLE ARMS, VANDAL PROOF 2-3/8" LEVER HANDLES. CERAMIC OPERATING CARTRIDGE, INTERGRAL CHECKS.
FD-1	FLOOR DRAIN	2"	1-1/2"	1-1/2"	-	-	WATT#FD-190-PR CAST IRON ADJUSTABLE FLOOR DRAIN, NO HUB OUTLET.
FD-2	FLOOR DRAIN	4"	2"	4"	-	-	WATT#FD-190-PR CAST IRON ADJUSTABLE FLOOR DRAIN, NO HUB OUTLET.
FD-3	FLOOR DRAIN	8"	4"	8"	-	-	WATTS #FD-470-F, EPOXY COATED CAST IRON, ANCHOR FLANGE, WEEPHOLES, 12-3/4" X 12-3/4" SQUARE FIXED TOP, DUCTILE IRON GRATE, NO HUB OUTLET.
TD-1	TRENCH DRAIN	2"	1-1/2"	1-1/2"	-	-	ZURN #ZS880 STAINLESS STEEL LINEAR SHOWER DRAIN, NO HUB OUTLET.
DF-1	DRINKING FOUNTAIN	2"	1-1/2"	1-1/2"	1/2"	-	HAWS #1119-1920 , DUAL 14 GAUGE TYPE 304 STAINLESS STEEL SATIN FINISH BASINS WITH BOTTLE FILLER #1920.
DF-2	DRINKING FOUNTAIN	2"	1-1/2"	1-1/2"	1/2"	-	HAWS#3602, ADA COMPLIANT PEDESTAL MOUNTED, PUSH-BUTTON OPERATED STAINLESS STEEL VALVES.
ESEW-1	EMERGENCY SHOWER/EYE WASH	-	-	-	1-1/4"	1-1/4	HAWS #8300-8309, EMERGENCY SHOWER/ EYEWASH, STAINLESS STEEL 11" ROUND BOWL, 3.7 GPM FLOW CONTROL, CHROME PLATED BRASS STAY-OPEN BALL VALVE.
HB-1	HOSE BIBB	-	-	-	3/4"	-	ACORN #8151-SSLF, RECESSED HOSE BOX WITH FLANGE AND LOCAKING DOOR, STAINLESS STEEL HOSE BIBB WITH VACUUM BREAKER.
TP-1	TRAP PRIMER	-	-	-	1/2"	-	PRECISION PLUMBING PRODUCT MODEL P-1 PRESSURE DROP ACTIVATED TRAP PRIMER. PROVIDE DISTRIBUTION UNIT AS REQUIRED.
WHA-1	WATER HAMMER ARRESTOR	-	-	-	-	-	MIFAB #MWH.INSTALL BEHIND LOCKABLE ACCESS PANEL WITH SHUT-OFF VALVE.
FS-1	FLOOR SINK	2"	1-1/2"	2"	-	-	SMITH #320-Y02, NO-HUB FLOOR SINK, PORCELAIN ENAMEL, ACID RESISTANT, COATED CAST IRON.
US-1	UTILITY SINK	2"	1-1/2"	2"	3/4"	3/4"	METCRAFT#6350-1, FREE STANDING SINK WITH WALL BRACKET.
RD-1, 2	ROOF DRAIN	SEE PLAN	-	-	-	-	EPOXY COATED CAST IRON, NO-HUB, VANDAL RESISTANT WATTS #300-NH-D-L. ROOF DRAIN SHALL BE IAPMO LISTED.
OD-1, 2	ROOF OVERFLOW DRAIN	SEE PLAN	-	-	-	-	EPOXY COATED CAST IRON, NO-HUB, VANDAL RESISTANT WATTS #300-NH-D-L-W WITH 2" WATER DAM. OVER FLOW DRAIN SHALL BE IAPMO LISTED.
IMB-1	ICE MAKER BOX	-	-	-	1/2"	-	GUY GRAY #BIM875QTSAB, RECESSED, 20 GAUGE GALVANIZED STEEL, LEAD FREE QUARTER TURN VALVE, 1/4" COMPRESSION OUTLET.
HD-1	HUB DRAIN	4"	2"	4"	-	-	6"X4" HUB DRAIN.
HS-1	HAND SINK	2"	1-1/2"	1-1/4" x 1-1/2"	1/2"	1/2"	SPECIFIED BY ARCHITECT. PROVIDE P-TRAP, STOPS, SUPPLIES INSULATION, AND ROUGH-INS AND CONNECT.

PLUMBING EQUIPMENT SCHEDULE

EQUIPMENT NO.	EQUIPMENT	GAS CFH	HOLDING CAPACITY (GAL)	ELECTRICAL			SIZE	MANUFACTURE	MODEL	LBS	REMARKS
				HP	VOLTAGE	PHASE					
WH-1	WATER HEATER	597	-	9 AMPS	120	1	-	AO SMITH	ACI-CRS-33WM-N	350	COMMERCIAL GAS, 3 UNIT TANKLESS WATER HEATER. INSTALL AS PER MANUFACTURER'S RECOMMENDATION.
WH-2	WATER HEATER	398	-	4.5 AMPS	120	1	-	AO SMITH	ACI-CRS-22WM-N	240	COMMERCIAL GAS, 2 UNIT TANKLESS WATER HEATER. INSTALL AS PER MANUFACTURER'S RECOMMENDATION.
WH-3	WATER HEATER	-	-	-	208	3	-	CHRONOMITE	ERB-180L/208_3P	76	ELECTRIC TANKLESS WATER HEATER, BOXER 3 PHASE. INSTALL AS PER MANUFACTURER'S RECOMMENDATION.
ET-1	EXPANSION TANK	-	8.5	-	-	-	-	WATTS	PLT-20	15	INSTALL AS PER MANUFACTURER'S RECOMMENDATION.
CP-1	CIRCULATION PUMP	-	-	1/40	120	1	-	TACO	PLUMB N' PLUG	10	INSTALL AS PER MANUFACTURER'S RECOMMENDATION.
BFP-1 /BFP-2	BACK FLOW PREVENTER	-	-	-	-	-	4", 3"	ZURN	350A	200	INSTALL AS PER MANUFACTURER'S RECOMMENDATION.
MV-1	MIXING VALVE	-	-	-	-	-	-	WATTS	LFISO75OVL	42	INSTALL AS PER MANUFACTURER'S RECOMMENDATION.
EQ-1	EARTHQUAKE VALVE	-	-	-	-	-	3"	PACIFIC SEISMIC PRODUCTS	315	-	INSTALL AS PER MANUFACTURER'S RECOMMENDATION.
BFP-3	BACKFLOW PREVENTER	-	-	-	-	-	3/4"	ZURN	975XL3	4	INSTALL AS PER MANUFACTURER'S RECOMMENDATION.
CDP-1	CONDENSATE PUMP	-	-	1/30	115	1	3/4"	LITTLE GIANT	VCMA-20-PRO	6	INSTALL AS PER MANUFACTURER'S RECOMMENDATION.

HEATED WATER PIPING INSULATION SCHEDULE

FLUID TEMPERATURE RANGE °F	CONNECTIVITY RANGE	INSULATION MEAN RATING TEMPERATURE °F	NOMINAL PIP DIAMETER (IN INCHES)					
			RUNOUTS UP TO 2"	1" AND LESS	1-1/4" TO 2"	2-1/2" TO 4"	5" TO 6"	8" AND LARGER
			INSULATION THICKNESS REQUIRED IN INCHES					
HEATING SYSTEMS (STEAM, STEAM CONDENSATE AND HOT WATER)								
105° TO 140°	0.24 - 0.28	100°	0.5	1.0	2.0	2.0	2.0	2.0
SERVICE WATER - HEATING SYSTEM (RECIRCULATING SECTIONS, ALL PIPING IN ELECTRIC TRACE TAPE SYSTEMS, AND THE FIRST 8 FEET OF PIPING FROM THE STORAGE TANK FOR NONRECIRCULATING SYSTEMS)								
ABOVE 105°	0.24 - 0.28	100°	0.5	1.0	2.5	3.0	3.5	3.5

PLUMBING LEGEND

SYMBOL	ABBR.	DESCRIPTION
—W—	W	SEWER LINE BELOW GRADE
—GR—	GR	GRAY WATER SEWER LINE BELOW GRADE
—V—	V	VENT LINE
	CW	COLD WATER PIPING ABOVE GRADE
	HW	HOT WATER PIPING ABOVE GRADE
	HWR	HOT WATER RETURN PIPING ABOVE GRADE
	CD	CONDENSATE DRAIN PIPING ABOVE GRADE
—MPG—	MPG	MEDIUM PRESSURE GAS LINE
—G—	G	LOW PRESSURE GAS LINE
	TW	TEMPERED WATER
	-	DROP IN PIPE
	-	RISE IN PIPE
	-	DIRECTION OF FLOW
	HB	HOSE BIBB
	CO	CLEANOUT
	WCO	WALL CLEANOUT
	-	FLOOR CLEANOUT TO GRADE
	U	UNION
	BV	BALL VALVE
	CV	CHECK VALVE
	-	GAS SHUT-OFF COCK
	GV	GATE VALVE
	AP	ACCESS PANEL
	CA	COMPRESSED AIR
	CFH	CUBIC FOOT PER HOUR
	FU	FIXTURE UNIT
	GPM	GALLONS PER MINUTE
	I.E.	INVERT ELEVATION
	TDL	TOTAL DEVELOPED LENGTH
	B.F.F.	BELOW FINISH FLOOR
A	A	HAMMER ARRESTOR
P	P	TRAP PRIMER
	VTR	VENT THROUGH ROOF
	FD	FLOOR DRAIN

APPLICABLE CODES

PART 1 2022 BUILDING STANDARDS ADMINISTRATIVE CODE, TITLE 24 C.C.R.

PART 2 2022 CALIFORNIA BUILDING CODE (CBC), TITLE 24 C.C.R. (2022 INTERNATIONAL BUILDING CODE OF THE INTERNATIONAL CODE COUNCIL, WITH CALIFORNIA AMENDMENTS)

PART 3 2022 CALIFORNIA ELECTRICAL CODE (CEC), TITLE 24 C.C.R. (2022 NATIONAL ELECTRICAL CODE OF THE NATIONAL FIRE PROTECTION ASSOCIATION, NFPA.)

PART 4 2022 CALIFORNIA MECHANICAL CODE (CMC), TITLE 24 C.C.R. (2022 UNIFORM MECHANICAL CODE OF THE INTERNATIONAL ASSOCIATION OF PLUMBING AND MECHANICAL OFFICIALS, IAPMO.)

PART 5 2022 CALIFORNIA PLUMBING CODE (CPC), TITLE 24 C.C.R. (2018 UNIFORM PLUMBING CODE OF THE INTERNATIONAL ASSOCIATION OF PLUMBING AND MECHANICAL OFFICIALS, IAPMO.)

PART 6 2022 CALIFORNIA ENERGY CODE, TITLE 24 C.C.R.

PART 9 2022 CALIFORNIA FIR CODE, TITLE 24 C.C.R. (2022 INTERNATIONAL FIRE CODE OF THE INTERNATIONAL CODE COUNCIL)

PART 10 2022 CALIFORNIA EXISTING BUILDING CODE, TITLE 24 C.C.R. (2022 INTERNATIONAL EXISTING BUILDINGS CODE OF THE INTERNATIONAL CODE COUNCIL, WITH AMENDMENTS)

PART 11 2022 CALIFORNIA GREEN BUILDING STANDARDS COD (CALGREEN), TITLE 24 C.C.R.

PART 12 2022 CALIFORNIA REFERENCED STANDARDS, TITLE 24 C.C.R.

PART 19 C.C.R., PUBLIC SAFETY, STATE FIRE MARSHAL REGULATIONS

PLUMBING SHEET INDEX

SHEET NUMBER	SHEET NAME
P0.01	PLUMBING FRONT SHEET
P0.02	PLUMBING SCHEDULE
P0.02A7	PLUMBING SCHEDULE ALT 7
P1.01	PLUMBING SITE PLAN
P1.01A6	PLUMBING SITE PLAN ALT 6
P1.01A7	PLUMBING SITE PLAN ALT 7
P2.01	PLUMBING COMMUNITY BUILDING COLD AND HOT WATER FLOOR PLAN
P2.01A6	PLUMBING COMMUNITY BUILDING COLD AND HOT WATER FLOOR PLAN ALT 6
P2.02	PLUMBING EQUIPMENT STORAGE COLD AND HOT WATER FLOOR PLAN
P2.03	PLUMBING COMMUNITY BUILDING WASTE AND VENT FLOOR PLAN
P2.03A6	PLUMBING COMMUNITY BUILDING WASTE AND VENT FLOOR PLAN ALT 6
P2.04	PLUMBING EQUIPMENT STORAGE WASTE AND VENT FLOOR PLAN
P2.05	PLUMBING COMMUNITY BUILDING ROOF PLAN
P2.05A6	PLUMBING COMMUNITY BUILDING ROOF PLAN ALT 6
P2.06	PLUMBING EQUIPMENT STORAGE ROOF PLAN
P3.01	PLUMBING WATER AND GAS RISER
P3.01A7	PLUMBING WATER AND GAS RISER ALT 7
P3.02	PLUMBING WASTE AND VENT RISER
P3.02A7	PLUMBING WASTE AND VENT RISER ALT 7
P6.01	PLUMBING DETAILS
P6.02	PLUMBING DETAILS

AGENCY

FLEWELLING & MOODY
architecture planning interiors

HEADQUARTERS OFFICE:
99 S. Lake Avenue, Suite 300
Pasadena, CA 91101
Phone: 323.543.8300
E-Mail: fm-pasadena@flewelling-moody.com

ANTELOPE VALLEY OFFICE:
1035 West Lancaster Bouldvard
Lancaster, California 93534
Phone: 661.949.0771
E-Mail: fm-lancaster@flewelling-moody.com

An Employee Owned Corporation

ARCHITECT

CONSULTANT

Budlong
An MBE|SBE|DBE|LSBE Firm
Glendale|Downtown LA|Fremont|Camarillo
WWW.BUDLONG.COM
Job No. 23-140

REGISTERED PROFESSIONAL ENGINEER — JUNTIL PATEL — No. 29448 — EXP. 06-30-25 — CIVIL — STATE OF CALIFORNIA

Drawn by: Author

Check by: Checker

Revisions

No.	Date	Description
	01/26/24	100% DD
	03/01/24	50% CD
	05/09/24	90% CD
	08/05/24	100% CD
	11/25/24	100% CD V2
	01/31/25	100% CD V3
1	6/9/25	BID ALTERNATE

All dimensions must be checked at the job by the contractor who accepts full responsibility for their accuracy under the contract. These plans & the specifications in connection therewith here been prepared for a specific site. Any and all responsibility for their use in whole or in part on any other site is hereby declaimed by Flewelling & Moody.

CITY OF RIDGECREST

SGT. JOHN PINNEY MEMORIAL POOL REPLACEMENT

205 S WARNER ST, RIDGECREST, CA 93555

Drawing Title

PLUMBING FRONT SHEET

Job No. 3055-0000

Sheet No. **P0.01**

Date 08/07/2024

FIXTURE UNIT COUNT

PIPE MATERIAL : COPPER

TYPE OF FIXTURES	QTY.	F.U.	TOTA F.U.
WATER CLOSETS	18	5	90
LAVATORIES	18	1	18
KITCHEN SINK	1	1.5	1.5
SHOWER	17	2	34
URINAL	6	4	24
DRINKING FOUNTAIN	2	0.5	1
SINK	2	2	4
SERVICE SINK	1	3	3
REF/IM	1	0.5	0.5
HOSE BIBB	2.5	1	2.5
HOSE BIBB	3	1	3
TOTAL FIXTURE UNITS			181.5
GPM			86
RECREATION POOL(MAKE UP WATER) GPM			80
TOTAL GPM			166

PLUMBING CALCULATIONS

WATER INFORMATION: 52 PSI MIN AND 59 PSI MAX

METER SIZE: 3" EQUIVALENT LENGTH (DEVELOPED LENGTH 125' + 25%) = 156 FT

PIPING MATERIAL: COPPER TYPE L

BACKFLOW PREVENTION ASSEMBLY: 3" ZURN#375A

HYDRAULIC CALCULATION

A.	PRESSURE LOSS THROUGH 3" METER	3 PSI
B.	PRESSURE LOSS THROUGH 3" REDUCED PRESSURE BACKFLOW PREVENTER	11 PSI
C.	PRESSURE LOSS DUE TO ELEVATION 10 FT X 0.433 =	4.33 PSI
D.	PRESSURE LOSS THROUGH PLUMBING FIXTURE	25 PSI
E.	WH LOSS	15 PSI
F.	PRESSURE AVAILABLE FOR FRICTION LOSS IN THE SYSTEM =	5.67 PSI
G.	PRESSURE/100FT: (5.67 PSI X 100)/156' =	3.63 PSI/100 FT

PIPE SIZING CHART

PIPE MATERIAL : COPPER PSI/100FT : 3.63

ALLOWED FIXTURE UNITS

	FLUSH TANK		FLUSH VALVE
SIZE (INCHES)	HOT WATER	COLD WATER	COLD WATER
1/2	1	1	0
3/4	6	6	0
1	13	13	0
1-1/4	28	28	10
1-1/2	46	54	33
2	119	185	132
2-1/2	245	431	329
3	406	719	666
4	840	1668	1668

WATER HEATER CALCULATION (WH-1&2)

LOCATION : JANITORIAL ROOM

FIXTURE TYPE	GPM	QTY	TOTAL GPM
LAVATORY	0.35	13	4.55
SHOWER	1.5	9	13.5
KITCHEN SINK	1.5	1	1.5
MOP SINK	2.2	1	2.2
SINK	1.75	2	3.5
TOTAL GPM			25.2

25.2 GPM PEAK DEMAND
A.O. SMITH ACT-199I-N AT 6.0 GPM EACH X 5 UNITS = 30 GPM

GAS APPLIANCES SCHEDULE

(AS PER TABLE 1208.4.1 - CPC-2022)

APPLIANCE TYPE	CFH VALUE	QTY	TOTAL
WATER HEATER	199	5	995
POOL BOILER	1,500	3	4,500
POOL BOILER	1,250	1	1.250
TOTAL CFH VALUE			6,745

PIPE SIZE SCHEDULE

LOW PRESSURE GAS SIZING CHART

PRESSURE LOSS: 0.5 TDL:150 FT

SIZE (INCHES)	MAXIMUM CFH
1/2"	40
3/4"	83
1"	157
1-1/4"	322
1-1/2"	482
2"	928
2-1/2"	1480
3"	2610
4"	5330
5"	9650

AGENCY

REVIEWED FOR CODE COMPLIANCE BY: WILLDAN ENGINEERING

Approval of these plans & specifications shall not be construed to be a permit for, or an approval of any violation of any Federal, State, County or City laws or ordinances. One set of approved plans must be kept on the job until completion.

9:27:49 AM Jul 21, 2025

FLEWELLING & MOODY
architecture planning interiors

HEADQUARTERS OFFICE:
99 S. Lake Avenue, Suite 300
Pasadena, CA 91101
Phone: 323.543.8300
E-Mail: fm-pasadena@flewelling-moody.com

ANTELOPE VALLEY OFFICE:
1035 West Lancaster Bouldvard
Lancaster, California 93534
Phone: 661.949.0771
E-Mail: fm-lancaster@flewelling-moody.com

An Employee Owned Corporation

ARCHITECT

CONSULTANT

Budlong
An MBE|SBE|DBE|LSBE Firm
Glendale|Downtown LA|Fremont|Camarillo
W W W . B U D L O N G . C O M
Job No. 23-140

REGISTERED PROFESSIONAL ENGINEER CIVIL PATEL No. 29448 EXP. 06-30-25 STATE OF CALIFORNIA

Drawn by: Author

Check by: Checker

Revisions

No.	Date	Description
	01/26/24	100% DD
	03/01/24	50% CD
	05/09/24	90% CD
	08/05/24	100% CD
	11/25/24	100% CD V2
	01/31/25	100% CD V3

All dimensions must be checked at the job by the contractor who accepts full responsibility for their accuracy under the contract. These plans & the specifications in connection therewith have been prepared for a specific site. Any and all responsibility for their use in whole or in part on any other site is hereby disclaimed by Flewelling & Moody.

CITY OF RIDGECREST

SGT. JOHN PINNEY MEMORIAL POOL REPLACEMENT

205 S WARNER ST, RIDGECREST, CA 93555

Drawing Title

PLUMBING SCHEDULE

Job No. 3055-0100

Sheet No. **P0.02**

Date 05/09/2025

FIXTURE UNIT COUNT

PIPE MATERIAL : COPPER

TYPE OF FIXTURES	QTY.	F.U.	TOTA F.U.
WATER CLOSETS	14	5	70
LAVATORIES	14	1	14
KITCHEN SINK	1	1.5	1.5
SHOWER	13	2	26
URINAL	6	4	24
DRINKING FOUNTAIN	2	0.5	1
SINK	2	2	4
SERVICE SINK	1	3	3
REF/IM	1	0.5	0.5
HOSE BIBB	2.5	1	2.5
HOSE BIBB	2	1	2
TOTAL FIXTURE UNITS			148.5
GPM			82
RECREATION POOL(MAKE UP WATER) GPM			80
TOTAL GPM			162

PLUMBING CALCULATIONS

WATER INFORMATION: 52 PSI MIN AND 59 PSI MAX

METER SIZE: 3" EQUIVALENT LENGTH (DEVELOPED LENGTH 125' + 25%) = 156 FT

PIPING MATERIAL: COPPER TYPE L

BACKFLOW PREVENTION ASSEMBLY: 3" ZURN#375A

HYDRAULIC CALCULATION

A.	PRESSURE LOSS THROUGH 3" METER	3 PSI
B.	PRESSURE LOSS THROUGH 3" REDUCED PRESSURE BACKFLOW PREVENTER	11 PSI
C.	PRESSURE LOSS DUE TO ELEVATION 10 FT X 0.433 =	4.33 PSI
D.	PRESSURE LOSS THROUGH PLUMBING FIXTURE	25 PSI
E.	WH LOSS	15 PSI
F.	PRESSURE AVAILABLE FOR FRICTION LOSS IN THE SYSTEM =	5.67 PSI
G.	PRESSURE/100FT: (5.67 PSI X 100)/156' =	3.63 PSI/100 FT

PIPE SIZING CHART

PIPE MATERIAL : COPPER PSI/100FT : 3.63

ALLOWED FIXTURE UNITS

	FLUSH TANK		FLUSH VALVE
SIZE (INCHES)	HOT WATER	COLD WATER	COLD WATER
1/2	1	1	0
3/4	6	6	0
1	13	13	0
1-1/4	28	28	10
1-1/2	46	54	33
2	119	185	132
2-1/2	245	431	329
3	406	719	666
4	840	1668	1668

WATER HEATER CALCULATION (WH-1&2)

LOCATION : JANITORIAL ROOM

FIXTURE TYPE	GPM	QTY	TOTAL GPM
LAVATORY	0.35	13	4.55
SHOWER	1.5	9	13.5
KITCHEN SINK	1.5	1	1.5
MOP SINK	2.2	1	2.2
SINK	1.75	2	3.5
TOTAL GPM			25.2

25.2 GPM PEAK DEMAND
A.O. SMITH ACT-199I-N AT 6.0 GPM EACH X 5 UNITS = 30 GPM

GAS APPLIANCES SCHEDULE

(AS PER TABLE 1208.4.1 - CPC-2022)

APPLIANCE TYPE	CFH VALUE	QTY	TOTAL
WATER HEATER	199	5	995
POOL BOILER	1,500	3	4,500
POOL BOILER	1,250	1	1.250
TOTAL CFH VALUE			6,745

PIPE SIZE SCHEDULE

LOW PRESSURE GAS SIZING CHART

PRESSURE LOSS: 0.5 TDL:150 FT

SIZE (INCHES)	MAXIMUM CFH
1/2"	40
3/4"	83
1"	157
1-1/4"	322
1-1/2"	482
2"	928
2-1/2"	1480
3"	2610
4"	5330
5"	9650

AGENCY

FLEWELLING & MOODY
architecture planning interiors

HEADQUARTERS OFFICE:
99 S. Lake Avenue, Suite 300
Pasadena, CA 91101
Phone: 323.543.8300
E-Mail: fm-pasadena@flewelling-moody.com

ANTELOPE VALLEY OFFICE:
1035 West Lancaster Bouldvard
Lancaster, California 93534
Phone: 661.949.0771
E-Mail: fm-lancaster@flewelling-moody.com

An Employee Owned Corporation

ARCHITECT

CONSULTANT

Budlong
An MBE|SBE|DBE|LSBE Firm
Glendale|Downtown LA|Fremont|Camarillo
W W W . B U D L O N G . C O M
Job No. 23-140

REGISTERED PROFESSIONAL ENGINEER CIVIL PATEL No. 29448 EXP. 06-30-25 STATE OF CALIFORNIA

Drawn by: Author

Check by: Checker

Revisions

No.	Date	Description
	01/26/24	100% DD
	03/01/24	50% CD
	05/09/24	90% CD
	08/05/24	100% CD
	11/25/24	100% CD V2
	01/31/25	100% CD V3
1	08/27/2025	BID ALTERNATE

All dimensions must be checked at the job by the contractor who accepts full responsibility for their accuracy under the contract. These plans & the specifications in connection therewith have been prepared for a specific site. Any and all responsibility for their use in whole or in part on any other site is hereby disclaimed by Flewelling & Moody.

CITY OF RIDGECREST

SGT. JOHN PINNEY MEMORIAL POOL REPLACEMENT

205 S WARNER ST, RIDGECREST, CA 93555

Drawing Title

PLUMBING SCHEDULE ALT 7

Job No. 3055-0000

Sheet No. **P0.02A7**

Date 08/07/2024

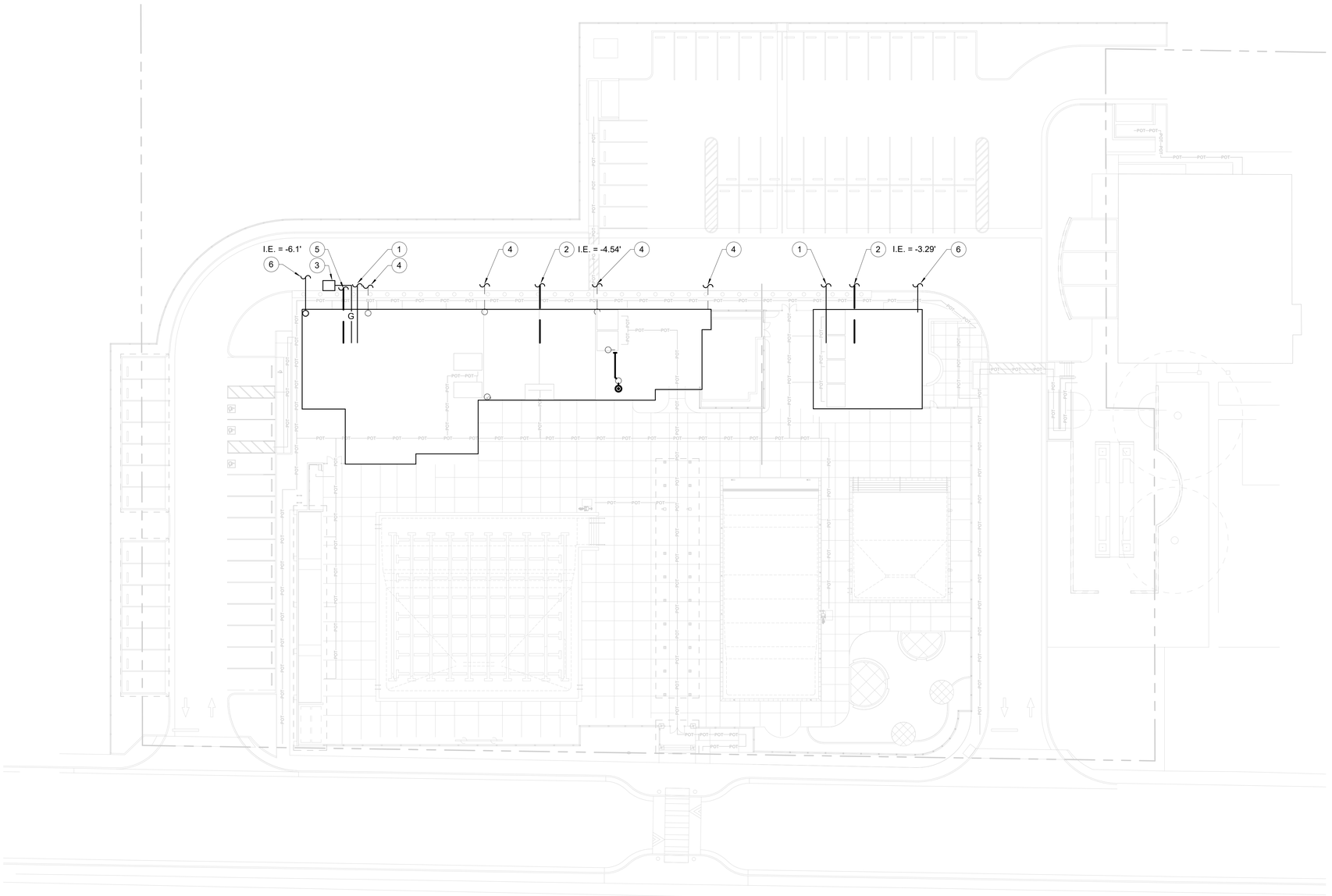

PLUMBING SITE PLAN

SCALE: 1" = 20'-0"

1 / P1.01

N

GENERAL NOTES

A. FOR CONTINUATION REFER TO CIVIL DRAWINGS.

B. PRIOR TO COMMENCING WORK CONTRACTOR SHALL VERIFY EXACT DEPTH AND LOCATION OF EXISTING SEWER LINES AT THE FIELD.

C. CONTRACTOR SHALL COORDINATE WITH SOIL REPORT FOR OTHER RECOMMENDATIONS, REQUIREMENTS AND OPTIONS.

D. ALL PIPING ON THIS PLAN SHALL BE CONCEALED INSIDE THE WALL, FLOOR OR CEILING UNLESS NOTED OTHERWISE.

KEYNOTES

1. 3" (181.5 FU) DOMESTIC COLD WATER POINT OF CONNECTION 5 FEET AWAY FROM THE BUILDING. REFER TO CIVIL PLANS FOR CONTINUATION.
2. 4" (114 FU) WASTE POINT OF CONNECTION 5 FEET AWAY FROM THE BUILDING. REFER TO CIVIL PLANS FOR CONTINUATION.
3. 6" (6745 CFH) LOW PRESSURE GAS POINT OF CONNECTION TO HOUSE LINE. GAS METER/REGULATOR ASSEMBLY BY LOCAL GAS COMPANY. PROVIDE SEISMIC SHUT-OFF VALVE.
4. 4" (1850 SQ. FT.) STORM DRAIN CONNECT TO BELOW GRADE STORM SEWER. REFER TO CIVIL PLANS FOR CONTINUATION.
5. 8" (36 FU) WASTE POINT OF CONNECTION 5 FEET AWAY FROM BUILDING. REFER TO CIVIL PLANS FOR CONTINUATION.
6. 6" FIRE SERVICE ENTRY POINT OF CONNECTION 5 FEET AWAY FROM BUILDING. REFER TO CIVIL PLANS FOR CONTINUATION.

AGENCY

REVIEWED FOR CODE COMPLIANCE BY: WILLDAN ENGINEERING

Approval of these plans & specifications shall not be construed to be a permit for, or an approval of any violation of any Federal, State, County or City laws or ordinances. One set of approved plans must be kept on the job until completion.

9:27:50 AM Jul 21, 2025

FLEWELLING & MOODY
architecture planning interiors

HEADQUARTERS OFFICE:
99 S. Lake Avenue, Suite 300
Pasadena, CA 91101
Phone: 323.543.8300
E-Mail: fm-pasadena@flewelling-moody.com

ANTELOPE VALLEY OFFICE:
1035 West Lancaster Bouldvard
Lancaster, California 93534
Phone: 661.949.0771
E-Mail: fm-lancaster@flewelling-moody.com

An Employee Owned Corporation

ARCHITECT

CONSULTANT

Budlong
An MBE|SBE|DBE|LSBE Firm
Glendale|Downtown LA|Fremont|Camarillo
W W W . B U D L O N G . C O M

Job No. 23-140

REGISTERED PROFESSIONAL ENGINEER — CIVIL — PATRICK — No. 29448 — EXP. 06-30-25 — STATE OF CALIFORNIA

Drawn by: Author

Check by: Checker

Revisions

No.	Date	Description
	01/26/24	100% DD
	03/01/24	50% CD
	05/09/24	90% CD
	08/05/24	100% CD
	11/25/24	100% CD V2
	01/31/25	100% CD V3

All dimensions must be checked at the job by the contractor who accepts full responsibility for their accuracy under the contract. These plans & the specifications in connection therewith have been prepared for a specific site. Any and all responsibility for their use in whole or in part on any other site is hereby disclaimed by Flewelling & Moody.

CITY OF RIDGECREST

SGT. JOHN PINNEY MEMORIAL POOL REPLACEMENT

205 S WARNER ST, RIDGECREST, CA 93555

Drawing Title

PLUMBING SITE PLAN

Job No. 3055-0100

Date 05/09/2025

Sheet No. **P1.01**

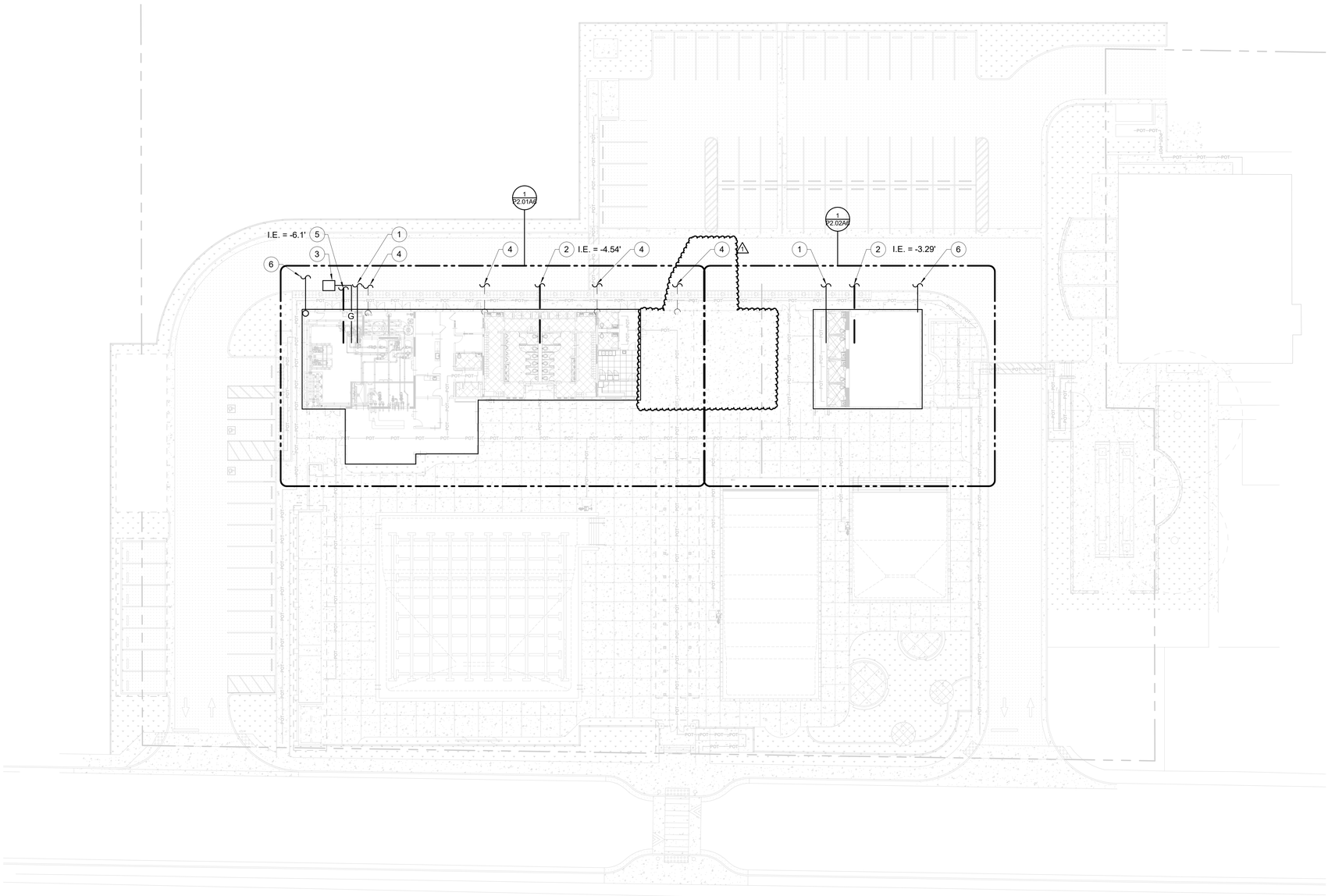

PLUMBING SITE PLAN ALT 6

SCALE: 1" = 20'-0"

1 P1.01A6

N

GENERAL NOTES

A. FOR CONTINUATION REFER TO CIVIL DRAWINGS.

B. PRIOR TO COMMENCING WORK CONTRACTOR SHALL VERIFY EXACT DEPTH AND LOCATION OF EXISTING SEWER LINES AT THE FIELD.

C. CONTRACTOR SHALL COORDINATE WITH SOIL REPORT FOR OTHER RECOMMENDATIONS, REQUIREMENTS AND OPTIONS.

D. ALL PIPING ON THIS PLAN SHALL BE CONCEALED INSIDE THE WALL, FLOOR OR CEILING UNLESS NOTED OTHERWISE.

KEYNOTES

1. 3" (181.5 FU) DOMESTIC COLD WATER POINT OF CONNECTION 5 FEET AWAY FROM THE BUILDING. REFER TO CIVIL PLANS FOR CONTINUATION.
2. 4" (114 FU) WASTE POINT OF CONNECTION 5 FEET AWAY FROM THE BUILDING. REFER TO CIVIL PLANS FOR CONTINUATION.
3. 6" (6745 CFH) LOW PRESSURE GAS POINT OF CONNECTION TO HOUSE LINE. GAS METER/REGULATOR ASSEMBLY BY LOCAL GAS COMPANY. PROVIDE SEISMIC SHUT-OFF VALVE.
4. 4" (1850 SQ. FT.) STORM DRAIN CONNECT TO BELOW GRADE STORM SEWER. REFER TO CIVIL PLANS FOR CONTINUATION.
5. 8" (36 FU) WASTE POINT OF CONNECTION 5 FEET AWAY FROM BUILDING. REFER TO CIVIL PLANS FOR CONTINUATION.
6. 6" FIRE SERVICE ENTRY POINT OF CONNECTION 5 FEET AWAY FROM BUILDING. REFER TO CIVIL PLANS FOR CONTINUATION.

AGENCY

FLEWELLING & MOODY
architecture planning interiors

HEADQUARTERS OFFICE:
99 S. Lake Avenue, Suite 300
Pasadena, CA 91101
Phone: 323.543.8300
E-Mail: fm-pasadena@flewelling-moody.com

ANTELOPE VALLEY OFFICE:
1035 West Lancaster Bouldvard
Lancaster, California 93534
Phone: 661.949.0771
E-Mail: fm-lancaster@flewelling-moody.com

An Employee Owned Corporation

ARCHITECT

CONSULTANT

Budlong
An MBE|SBE|DBE|LSBE Firm
Glendale|Downtown LA|Fremont|Camarillo
W W W . B U D L O N G . C O M
Job No. 23-140

REGISTERED PROFESSIONAL ENGINEER
CONTL PATEL
No. 29448
EXP. 06-30-25
CIVIL
STATE OF CALIFORNIA

Drawn by: Author

Check by: Checker

Revisions

No.	Date	Description
	01/26/24	100% DD
	03/01/24	50% CD
	05/09/24	90% CD
	08/05/24	100% CD
	11/25/24	100% CD V2
	01/31/25	100% CD V3
1	08/27/2025	BID ALTERNATE

All dimensions must be checked at the job by the contractor who accepts full responsibility for their accuracy under the contract. These plans & the specifications in connection therewith have been prepared for a specific site. Any and all responsibility for their use in whole or in part on any other site is hereby disclaimed by Flewelling & Moody.

CITY OF RIDGECREST

SGT. JOHN PINNEY MEMORIAL POOL REPLACEMENT

205 S WARNER ST, RIDGECREST, CA 93555

Drawing Title

PLUMBING SITE PLAN ALT 6

Job No. 3055-0000

Date 08/07/2024

Sheet No. **P1.01A6**

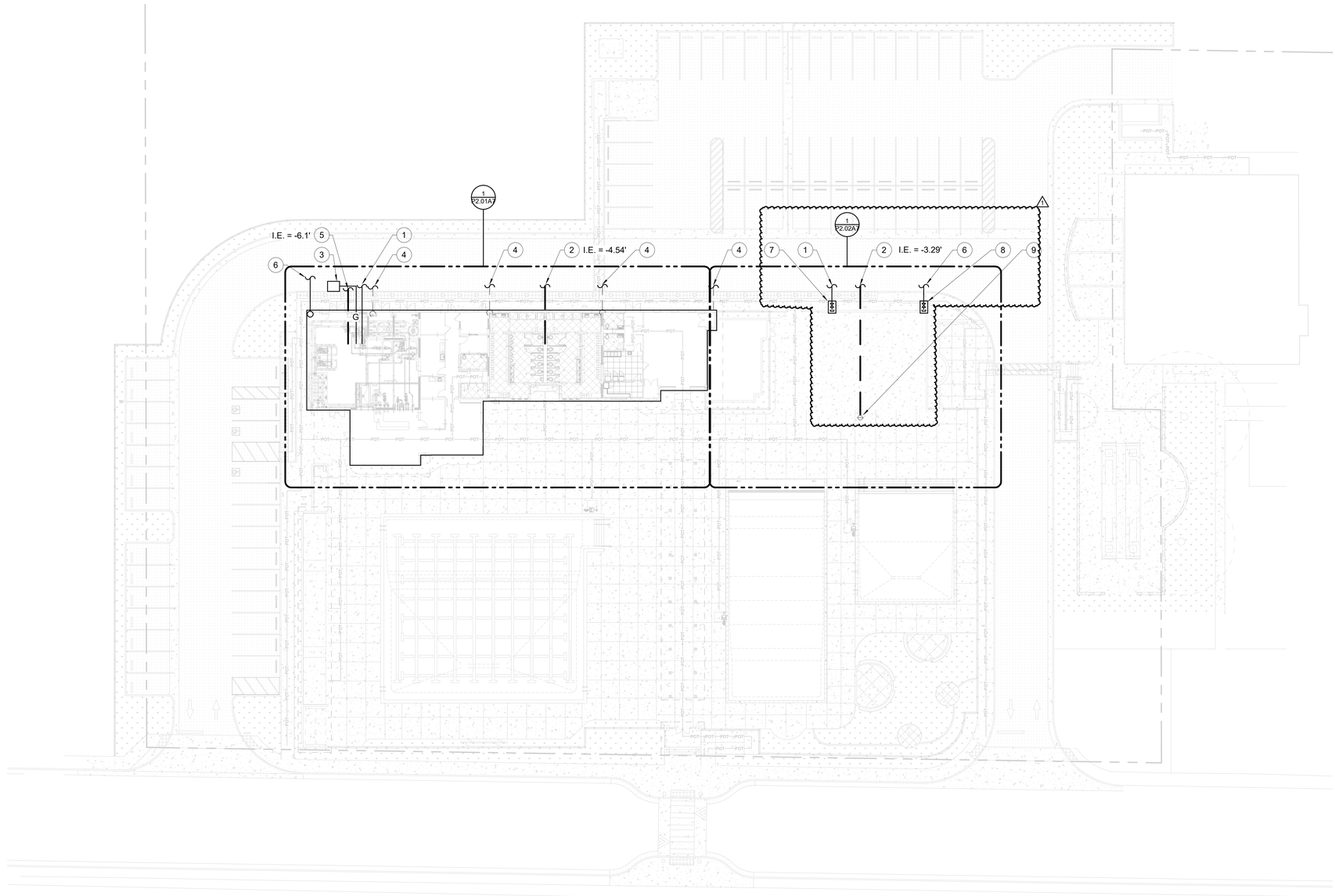

PLUMBING SITE PLAN ALT 7

SCALE: 1" = 20'-0"

1 P1.01A7 N

GENERAL NOTES

A. FOR CONTINUATION REFER TO CIVIL DRAWINGS.

B. PRIOR TO COMMENCING WORK CONTRACTOR SHALL VERIFY EXACT DEPTH AND LOCATION OF EXISTING SEWER LINES AT THE FIELD.

C. CONTRACTOR SHALL COORDINATE WITH SOIL REPORT FOR OTHER RECOMMENDATIONS, REQUIREMENTS AND OPTIONS.

D. ALL PIPING ON THIS PLAN SHALL BE CONCEALED INSIDE THE WALL, FLOOR OR CEILING UNLESS NOTED OTHERWISE.

KEYNOTES

1. 3" (181.5 FU) DOMESTIC COLD WATER POINT OF CONNECTION 5 FEET AWAY FROM THE BUILDING. REFER TO CIVIL PLANS FOR CONTINUATION.
2. 4" (114 FU) WASTE POINT OF CONNECTION 5 FEET AWAY FROM THE BUILDING. REFER TO CIVIL PLANS FOR CONTINUATION.
3. 6" (6745 CFH) LOW PRESSURE GAS POINT OF CONNECTION TO HOUSE LINE. GAS METER/REGULATOR ASSEMBLY BY LOCAL GAS COMPANY. PROVIDE SEISMIC SHUT-OFF VALVE.
4. 4" (1850 SQ. FT.) STORM DRAIN CONNECT TO BELOW GRADE STORM SEWER. REFER TO CIVIL PLANS FOR CONTINUATION.
5. 8" (36 FU) WASTE POINT OF CONNECTION 5 FEET AWAY FROM BUILDING. REFER TO CIVIL PLANS FOR CONTINUATION.
6. 6" FIRE SERVICE ENTRY POINT OF CONNECTION 5 FEET AWAY FROM BUILDING. REFER TO CIVIL PLANS FOR CONTINUATION.
7. 3" DOMESTIC COLD WATER WITH VALVE AND CAP IN VAULT.
8. 6" FIRE SERVICE WITH VALVE AND CAP IN VAULT.
9. 4" CLEANOUT. COORDINATE EXACT LOCATION WITH ARCHITECT AND POOL CONSULTANT.

AGENCY

FLEWELLING & MOODY
architecture planning interiors

HEADQUARTERS OFFICE:
99 S. Lake Avenue, Suite 300
Pasadena, CA 91101
Phone: 323.543.8300
E-Mail: fm-pasadena@flewelling-moody.com

ANTELOPE VALLEY OFFICE:
1035 West Lancaster Bouldvard
Lancaster, California 93534
Phone: 661.949.0771
E-Mail: fm-lancaster@flewelling-moody.com

An Employee Owned Corporation

ARCHITECT

CONSULTANT

Budlong
An MBE|SBE|DBE|LSBE Firm
Glendale|Downtown LA|Fremont|Camarillo
W W W . B U D L O N G . C O M
Job No. 23-140

REGISTERED PROFESSIONAL ENGINEER
CIVIL
PATEL
No. 29448
EXP. 06-30-25
STATE OF CALIFORNIA

Drawn by: Author

Check by: Checker

Revisions

No.	Date	Description
	01/26/24	100% DD
	03/01/24	50% CD
	05/09/24	90% CD
	08/05/24	100% CD
	11/25/24	100% CD V2
	01/31/25	100% CD V3
1	08/27/2025	BID ALTERNATE

All dimensions must be checked at the job by the contractor who accepts full responsibility for their accuracy under the contract. These plans & the specifications in connection therewith have been prepared for a specific site. Any and all responsibility for their use in whole or in part on any other site is hereby disclaimed by Flewelling & Moody.

CITY OF RIDGECREST

SGT. JOHN PINNEY MEMORIAL POOL REPLACEMENT

205 S WARNER ST, RIDGECREST, CA 93555

Drawing Title

PLUMBING SITE PLAN ALT 7

Job No. 3055-0000

Date 08/07/2024

Sheet No. **P1.01A7**

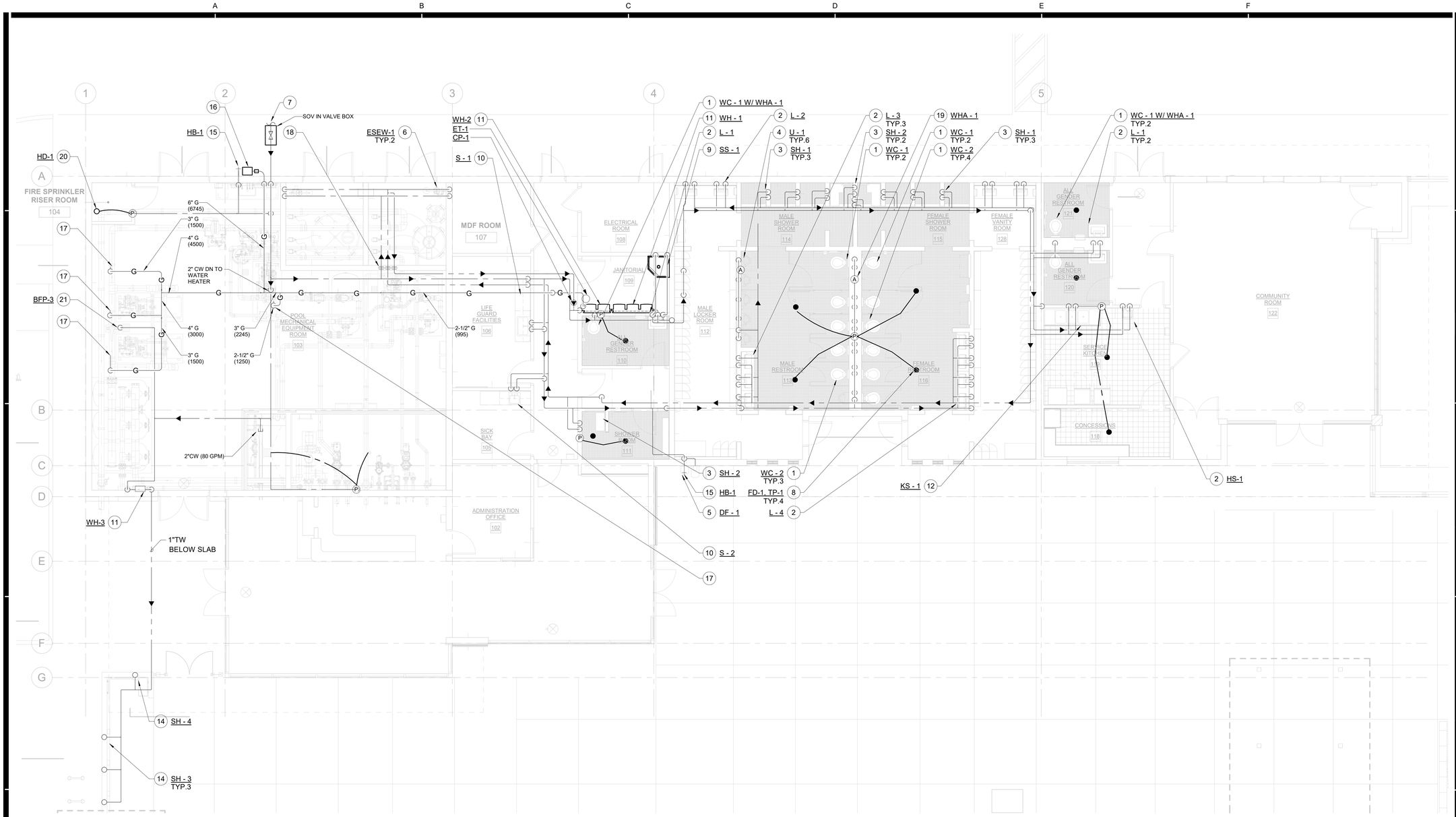

PLUMBING COMMUNITY BUILDING COLD AND HOT WATER FLOOR PLAN

SCALE: 3/16" = 1'-0"

1 / P2.01

N

GENERAL NOTES

A. ALL PIPING ON THIS PLAN SHALL BE CONCEALED INSIDE THE WALL, FLOOR OR CEILING UNLESS NOTED OTHERWISE.

B. REFER TO RISER DIAGRAMS FOR PIPE SIZES.

C. PROVIDE INSULATION FOR ALL HW PIPING.

D. INSTALL SHUT-OFF VALVE AND SUB METERS BEHIND LOCKABLE ACCESS PANEL.

KEYNOTES

1. INSTALL WATER CLOSET WITH ALL RELATED ACCESSORIES. RUN 1-1/2" CW (5 FU) DOWN TO WATER CLOSET.
2. INSTALL LAVATORY/HAND SINK WITH ALL RELATED ACCESSORIES. RUN 3/4" CW (1 FU) AND 3/4" HW (1 FU) DOWN TO FAUCET.
3. INSTALL SHOWER WITH ALL RELATED ACCESSORIES. RUN 3/4" CW (2 FU) AND 3/4" HW (2 FU) DOWN TO SHOWER.
4. INSTALL URINAL WITH ALL RELATED ACCESSORIES. RUN 1-1/4" CW (4 FU) DOWN TO URINAL.
5. INSTALL DRINKING FOUNTAIN WITH ALL RELATED ACCESSORIES. RUN 3/4" CW (0.5 FU) DOWN.
6. INSTALL EMERGENCY SHOWER AND EYEWASH WITH ALL RELATED ACCESSORIES. RUN 1" CW (10 FU) DOWN.
7. 3" CW (167 FU) BELOW GRADE WITH 3" SHUT-OFF VALVE IN 17" X 30" VAULT. REFER TO PLUMBING SITE PLAN FOR CONTINUATION.

KEYNOTES

8. INSTALL FLOOR DRAIN WITH ALL RELATED ACCESSORIES. RUN 1/2" CW DOWN TO TRAP PRIMER.
9. INSTALL SERVICE SINK WITH ALL RELATED ACCESSORIES. RUN 3/4" CW (3 FU) AND 3/4" HW (3 FU) DOWN TO FAUCET.
10. INSTALL SINK WITH ALL RELATED ACCESSORIES.RUN 3/4" CW (2 FU) AND 3/4" HW (2 FU) DOWN TO FAUCET.
11. INSTALL WATER HEATER WITH ALL RELATED ACCESSORIES. INSTALL WITH EXPANSION TANK AND CIRCULATION PUMP. RUN 2" CW DOWN and 2" HW UP TO WATER HEATER.
12. INSTALL KITCHEN SINK WITH ALL RELATED ACCESSORIES. RUN 3/4" CW (1.5 FU) AND 3/4" HW (1.5 FU) DOWN TO FAUCET.
13. INSTALL ICE MAKER WITH ALL RELATED ACCESSORIES. RUN 1/2" CW (0.5 FU) DOWN TO SHOWER.
14. INSTALL SHOWER WITH ALL RELATED ACCESSORIES. RUN 3/4" TEMPERED WATER (2 FU) TO SHOWER VALVE.

KEYNOTES

15. INSTALL HOSE BIBB WITH ALL RELATED ACCESSORIES. RUN 3/4" CW (2.5 FU) TO HOSE BIBB.
16. GAS METER AND REGULATOR ASSEMBLY BY GAS COMPANY. PROVIDE PACIFIC SEISMIC PRODUCTS VALVE 315.
17. GAS PIPING DROP TO POOL BOILER.
18. TRANSITION COPPER PIPING TO CPVC SCHEDULE 40 WITHIN THIS ROOM.
19. INSTALL WATER HAMMER ARRESTOR WITH ALL RELATED ACCESSORIES BEHIND ACCESS PANEL. COORDINATE EXACT ACCESS PANEL LOCATION W/ ARCHITECT.
20. INSTALL 6" X 4" HUB DRAIN WITH ALL RELATED ACCESSORIES. RUN 1/2" CW DOWN TO TRAP PRIMER. COORDINATE EXACT LOCATION WITH FIRE RISER TEST DRAIN.
21. 3/4" CW DROP TO 3/4" REDUCED PRESSURE PRINCIPLE BACKFLOW PREVENTER AND CONNECT TO EQUIPMENT.

AGENCY

REVIEWED FOR CODE COMPLIANCE BY: WILLDAN ENGINEERING

Approval of these plans & specifications shall not be construed to be a permit for, or an approval of any violation of any Federal, State, County or City laws or ordinances. One set of approved plans must be kept on the job until completion.

9:27:52 AM Jul 21, 2025

FLEWELLING & MOODY
architecture planning interiors

HEADQUARTERS OFFICE:
99 S. Lake Avenue, Suite 300
Pasadena, CA 91101
Phone: 323.543.8300
E-Mail: fm-pasadena@flewelling-moody.com

ANTELOPE VALLEY OFFICE:
1035 West Lancaster Bouldvard
Lancaster, California 93534
Phone: 661.949.0771
E-Mail: fm-lancaster@flewelling-moody.com

An Employee Owned Corporation

ARCHITECT

CONSULTANT

Budlong
An MBE|SBE|DBE|LSBE Firm
Glendale|Downtown LA|Fremont|Camarillo
W W W . B U D L O N G . C O M
Job No. 23-140

REGISTERED PROFESSIONAL ENGINEER SUNIL PATEL No. 29448 EXP. 06-30-25 STATE OF CALIFORNIA

Drawn by: Author

Check by: Checker

Revisions

No.	Date	Description
	01/26/24	100% DD
	03/01/24	50% CD
	05/09/24	90% CD
	08/05/24	100% CD
	11/25/24	100% CD V2
	01/31/25	100% CD V3

All dimensions must be checked at the job by the contractor who accepts full responsibility for their accuracy under the contract. These plans & the specifications in connection therewith have been prepared for a specific site. Any and all responsibility for their use in whole or in part on any other site is hereby disclaimed by Flewelling & Moody.

CITY OF RIDGECREST

SGT. JOHN PINNEY MEMORIAL POOL REPLACEMENT

205 S WARNER ST, RIDGECREST, CA 93555

Drawing Title

PLUMBING COMMUNITY BUILDING COLD AND HOT WATER FLOOR PLAN

Job No. 3055-0100

Sheet No. P2.01

Date 05/09/2025

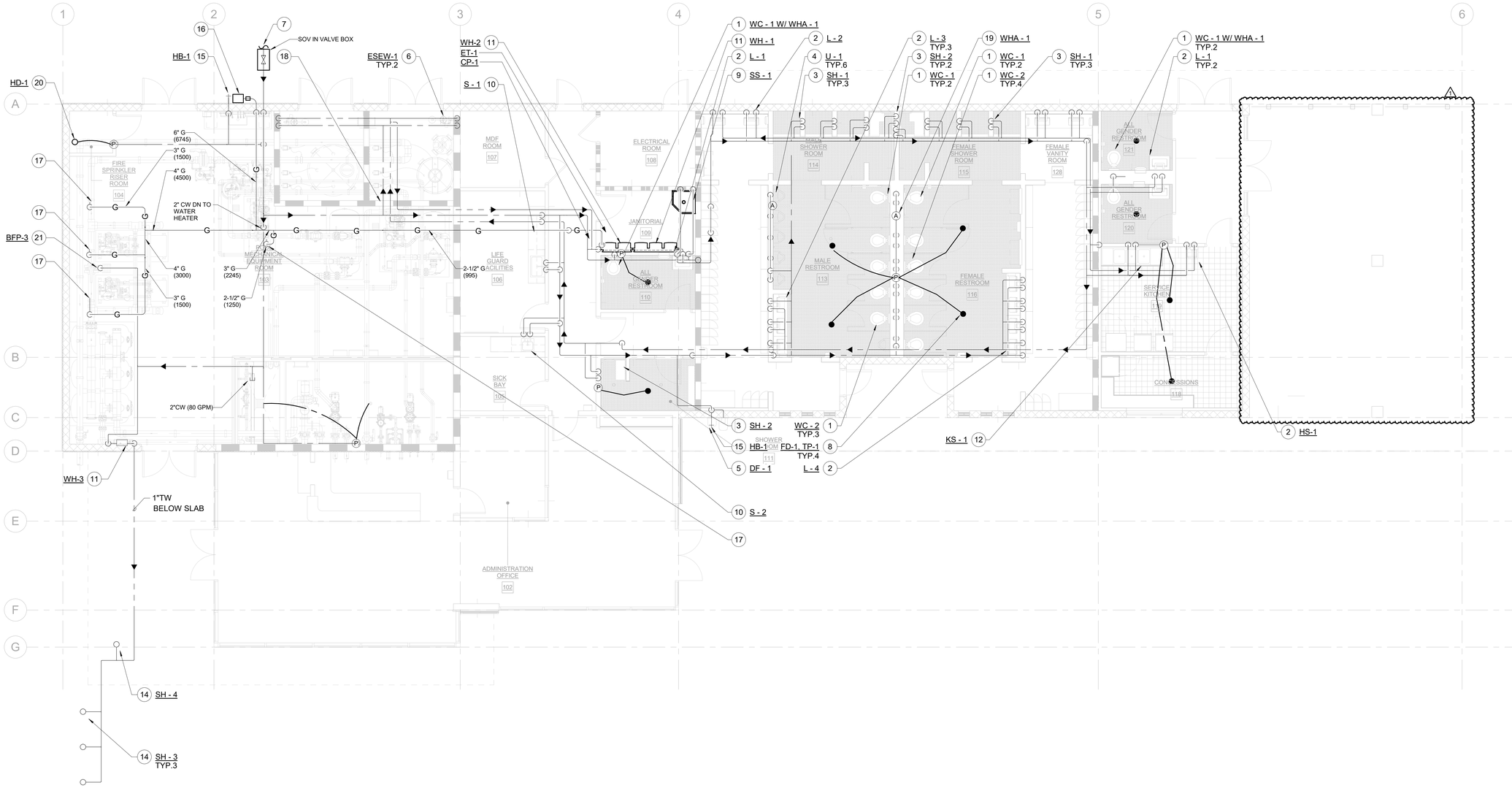

PLUMBING COMMUNITY BUILDING COLD AND HOT WATER FLOOR PLAN ALT 6

SCALE: 3/16" = 1'-0"

1 / P2.01A6

N

GENERAL NOTES

A. ALL PIPING ON THIS PLAN SHALL BE CONCEALED INSIDE THE WALL, FLOOR OR CEILING UNLESS NOTED OTHERWISE.

B. REFER TO RISER DIAGRAMS FOR PIPE SIZES.

C. PROVIDE INSULATION FOR ALL HW PIPING.

D. INSTALL SHUT-OFF VALVE AND SUB METERS BEHIND LOCKABLE ACCESS PANEL.

KEYNOTES

1. INSTALL WATER CLOSET WITH ALL RELATED ACCESSORIES. RUN 1-1/2" CW (5 FU) DOWN TO WATER CLOSET.
2. INSTALL LAVATORY/HAND SINK WITH ALL RELATED ACCESSORIES. RUN 3/4" CW (1 FU) AND 3/4" HW (1 FU) DOWN TO FAUCET.
3. INSTALL SHOWER WITH ALL RELATED ACCESSORIES. RUN 3/4" CW (2 FU) AND 3/4" HW (2 FU) DOWN TO SHOWER.
4. INSTALL URINAL WITH ALL RELATED ACCESSORIES. RUN 1-1/4" CW (4 FU) DOWN TO URINAL.
5. INSTALL DRINKING FOUNTAIN WITH ALL RELATED ACCESSORIES. RUN 3/4" CW (0.5 FU) DOWN.
6. INSTALL EMERGENCY SHOWER AND EYEWASH WITH ALL RELATED ACCESSORIES. RUN 1" CW (10 FU) DOWN.
7. 3" CW (167 FU) BELOW GRADE WITH 3" SHUT-OFF VALVE IN 17" X 30" VAULT. REFER TO PLUMBING SITE PLAN FOR CONTINUATION.

KEYNOTES

8. INSTALL FLOOR DRAIN WITH ALL RELATED ACCESSORIES. RUN 1/2" CW DOWN TO TRAP PRIMER.
9. INSTALL SERVICE SINK WITH ALL RELATED ACCESSORIES. RUN 3/4" CW (3 FU) AND 3/4" HW (3 FU) DOWN TO FAUCET.
10. INSTALL SINK WITH ALL RELATED ACCESSORIES.RUN 3/4" CW (2 FU) AND 3/4" HW (2 FU) DOWN TO FAUCET.
11. INSTALL WATER HEATER WITH ALL RELATED ACCESSORIES. INSTALL WITH EXPANSION TANK AND CIRCULATION PUMP. RUN 2" CW DOWN and 2" HW UP TO WATER HEATER.
12. INSTALL KITCHEN SINK WITH ALL RELATED ACCESSORIES. RUN 3/4" CW (1.5 FU) AND 3/4" HW (1.5 FU) DOWN TO FAUCET.
13. INSTALL ICE MAKER WITH ALL RELATED ACCESSORIES. RUN 1/2" CW (0.5 FU) DOWN TO SHOWER.
14. INSTALL SHOWER WITH ALL RELATED ACCESSORIES. RUN 3/4" TEMPERED WATER (2 FU) TO SHOWER VALVE.

KEYNOTES

15. INSTALL HOSE BIBB WITH ALL RELATED ACCESSORIES. RUN 3/4" CW (2.5 FU) TO HOSE BIBB.
16. GAS METER AND REGULATOR ASSEMBLY BY GAS COMPANY. PROVIDE PACIFIC SEISMIC PRODUCTS VALVE 315.
17. GAS PIPING DROP TO POOL BOILER.
18. TRANSITION COPPER PIPING TO CPVC SCHEDULE 40 WITHIN THIS ROOM.
19. INSTALL WATER HAMMER ARRESTOR WITH ALL RELATED ACCESSORIES BEHIND ACCESS PANEL. COORDINATE EXACT ACCESS PANEL LOCATION W/ ARCHITECT.
20. INSTALL 6" X 4" HUB DRAIN WITH ALL RELATED ACCESSORIES. RUN 1/2" CW DOWN TO TRAP PRIMER. COORDINATE EXACT LOCATION WITH FIRE RISER TEST DRAIN.
21. 3/4" CW DROP TO 3/4" REDUCED PRESSURE PRINCIPLE BACKFLOW PREVENTER AND CONNECT TO EQUIPMENT.

AGENCY

FLEWELLING & MOODY
architecture planning interiors

HEADQUARTERS OFFICE:
99 S. Lake Avenue, Suite 300
Pasadena, CA 91101
Phone: 323.543.8300
E-Mail: fm-pasadena@flewelling-moody.com

ANTELOPE VALLEY OFFICE:
1035 West Lancaster Bouldvard
Lancaster, California 93534
Phone: 661.949.0771
E-Mail: fm-lancaster@flewelling-moody.com

An Employee Owned Corporation

ARCHITECT

CONSULTANT

Budlong
An MBE|SBE|DBE|LSBE Firm
Glendale|Downtown LA|Fremont|Camarillo
WWW.BUDLONG.COM
Job No. 23-140

REGISTERED PROFESSIONAL ENGINEER — SUNIL PATEL — No. 29448 — EXP. 06-30-25 — STATE OF CALIFORNIA

Drawn by: Author

Check by: Checker

Revisions

No.	Date	Description
	01/26/24	100% DD
	03/01/24	50% CD
	05/09/24	90% CD
	08/05/24	100% CD
	11/25/24	100% CD V2
	01/31/25	100% CD V3
1	08/27/2025	BID ALTERNATE

All dimensions must be checked at the job by the contractor who accepts full responsibility for their accuracy under the contract. These plans & the specifications in connection therewith have been prepared for a specific site. Any and all responsibility for their use in whole or in part on any other site is hereby disclaimed by Flewelling & Moody.

CITY OF RIDGECREST

SGT. JOHN PINNEY MEMORIAL POOL REPLACEMENT

205 S WARNER ST, RIDGECREST, CA 93555

Drawing Title

PLUMBING COMMUNITY BUILDING COLD AND HOT WATER FLOOR PLAN ALT 6

Job No.	Sheet No.
3055-0000	**P2.01A6**
Date: 08/07/2024	

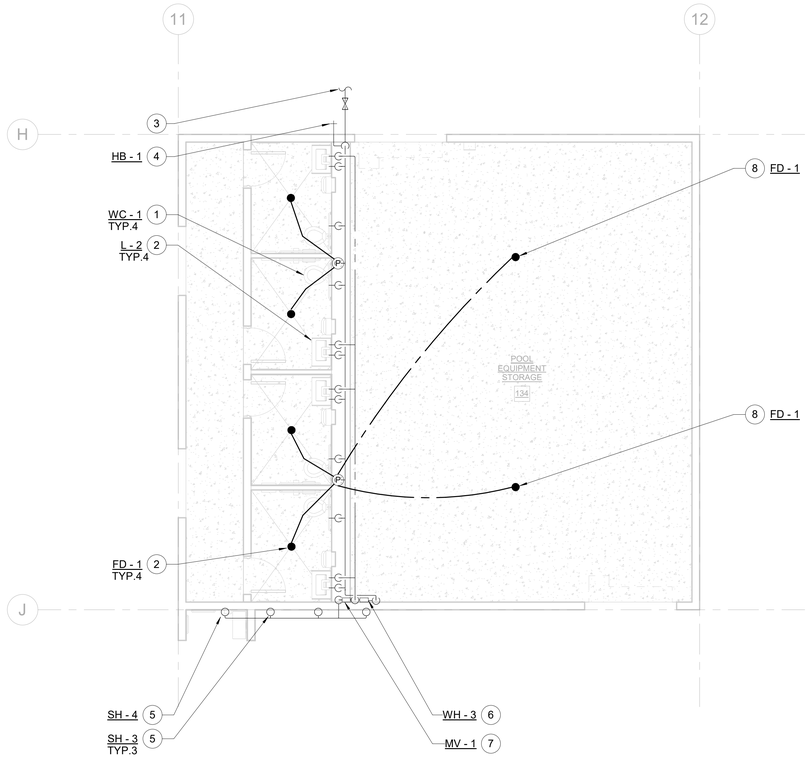

PLUMBING EQUIPMENT STORAGE COLD AND HOT WATER FLOOR PLAN

SCALE: 3/16" = 1'-0"

1 / P2.02

N

GENERAL NOTES

A. ALL PIPING ON THIS PLAN SHALL BE CONCEALED INSIDE THE WALL, FLOOR OR CEILING UNLESS NOTED OTHERWISE.

B. REFER TO RISER DIAGRAMS FOR PIPE SIZES.

C. PROVIDE INSULATION FOR ALL HW PIPING.

D. INSTALL SHUT-OFF VALVE AND SUB METERS BEHIND LOCKABLE ACCESS PANEL.

KEYNOTES

1. INSTALL WATER CLOSET WITH ALL RELATED ACCESSORIES. RUN 1-1/2" CW (5 FU) DOWN TO WATER CLOSET.
2. INSTALL LAVATORY WITH ALL RELATED ACCESSORIES. RUN 3/4" CW (1 FU) AND 3/4" HW (1 FU) DOWN TO FAUCET.
3. 2" COLD WATER (34.5 FU) BELOW GRADE WITH 2" SHUT-OFF VALVE IN 17" X 30" VAULT. REFER TO PLUMBING SITE PLAN FOR CONTINUATION.
4. INSTALL HOSE BIBB WITH ALL RELATED ACCESSORIES. RUN 3/4" CW (2.5 FU) TO HOSE BIBB.
5. INSTALL SHOWER WITH ALL RELATED ACCESSORIES. RUN 3/4" TEMPERED WATER (2 FU) TO SHOWER VALVE.

KEYNOTES

6. INSTALL WATER HEATER WITH ALL RELATED ACCESSORIES. RUN 1" CW DOWN TO WATER HEATER. RUN 1" HW FROM WATER HEATER.
7. INSTALL MIXING VALVE AND ALL RELATED ACCESSORIES. RUN 1" H & CW TO MIXING VALVE. RUN 1" TEMPERED WATER TO SHOWERS.
8. INSTALL FLOOR DRAIN WITH ALL RELATED ACCESSORIES. RUN 1/2" CW DOWN TO TRAP PRIMER.

AGENCY

REVIEWED FOR CODE COMPLIANCE BY: WILLDAN ENGINEERING

Approval of these plans & specifications shall not be construed to be a permit for, or an approval of any violation of any Federal, State, County or City laws or ordinances. One set of approved plans must be kept on the job until completion.

9:27:53 AM Jul 21, 2025

FLEWELLING & MOODY
architecture planning interiors

HEADQUARTERS OFFICE:
99 S. Lake Avenue, Suite 300
Pasadena, CA 91101
Phone: 323.543.8300
E-Mail: fm-pasadena@flewelling-moody.com

ANTELOPE VALLEY OFFICE:
1035 West Lancaster Boulevard
Lancaster, California 93534
Phone: 661.949.0771
E-Mail: fm-lancaster@flewelling-moody.com

An Employee Owned Corporation

ARCHITECT

CONSULTANT

Budlong
An MBE|SBE|DBE|LSBE Firm
Glendale|Downtown LA|Fremont|Camarillo
W W W . B U D L O N G . C O M
Job No. 23-140

REGISTERED PROFESSIONAL ENGINEER SUNIL PATEL No. 29448 EXP. 06-30-25 STATE OF CALIFORNIA

Drawn by: Author

Check by: Checker

Revisions

No.	Date	Description
	01/26/24	100% DD
	03/01/24	50% CD
	05/09/24	90% CD
	08/05/24	100% CD
	11/25/24	100% CD V2
	01/31/25	100% CD V3

All dimensions must be checked at the job by the contractor who accepts full responsibility for their accuracy under the contract. These plans & the specifications in connection therewith have been prepared for a specific site. Any and all responsibility for their use in whole or in part on any other site is hereby disclaimed by Flewelling & Moody.

CITY OF RIDGECREST

SGT. JOHN PINNEY MEMORIAL POOL REPLACEMENT

205 S WARNER ST, RIDGECREST, CA 93555

Drawing Title

PLUMBING EQUIPMENT STORAGE COLD AND HOT WATER FLOOR PLAN

Job No. 3055-0100

Sheet No. **P2.02**

Date 05/09/2025

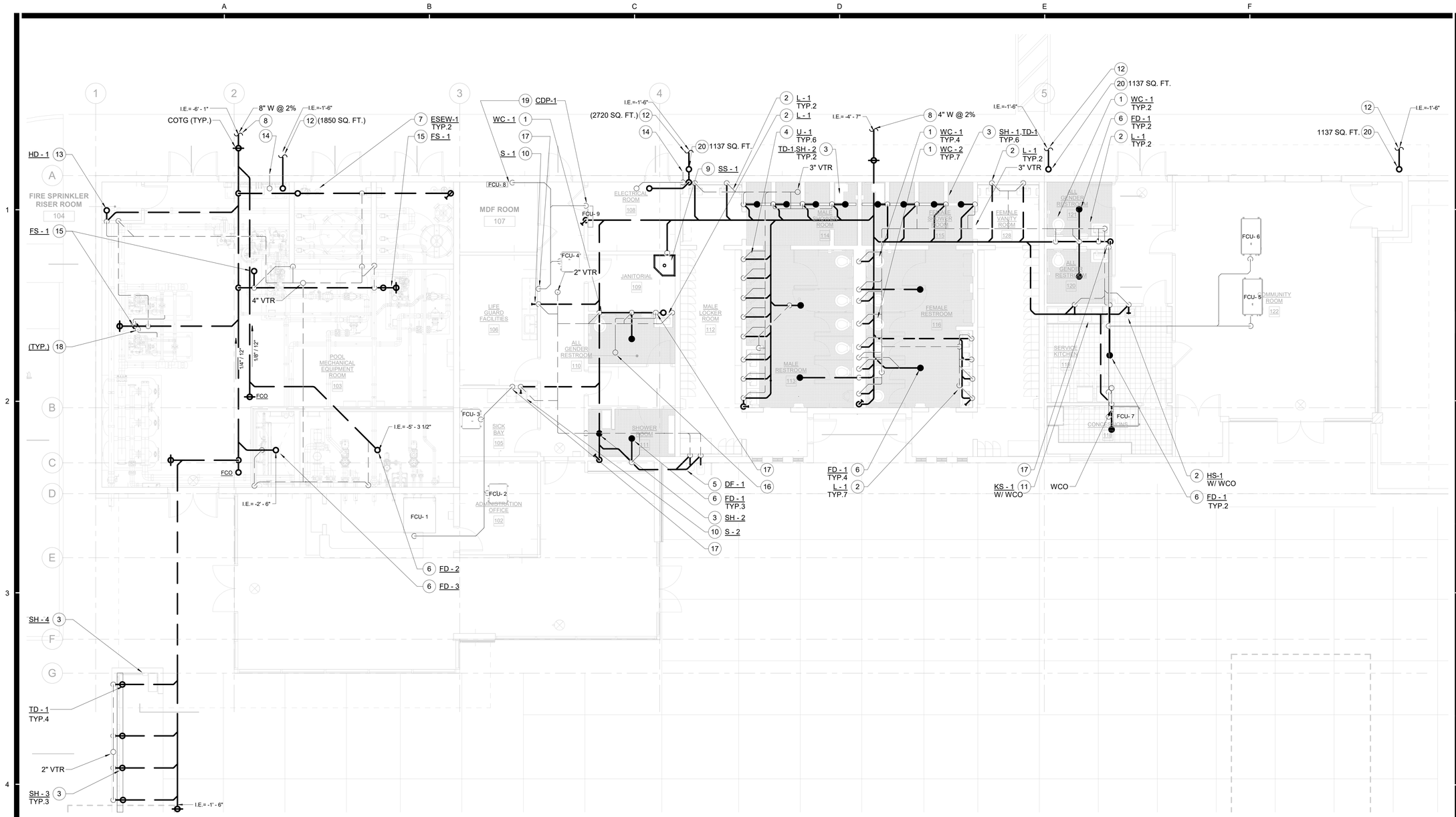

PLUMBING COMMUNITY BUILDING WASTE AND VENT FLOOR PLAN

SCALE: 3/16" = 1'-0"

1 / P2.03

N

GENERAL NOTES

A. ALL PIPING ON THIS PLAN SHALL BE CONCEALED INSIDE THE WALL, FLOOR OR CEILING UNLESS NOTED OTHERWISE.

B. REFER TO RISER DIAGRAMS FOR PIPE SIZES.

C. RUN ALL WASTE PIPING AT 2% SLOPE.

D. ALL FIXTURES SHALL BE TRAPPED AND VENTED.

KEYNOTES

1. INSTALL WATER CLOSET WITH ALL RELATED ACCESSORIES. RUN 4" W (4 FU) DOWN AND 2" V (4 FU) UP.
2. INSTALL LAVATORY/HAND SINK WITH ALL RELATED ACCESSORIES. RUN 2" W (1 FU) DOWN AND 1-1/2" V (1 FU) UP.
3. INSTALL SHOWER TRENCH DRAIN WITH ALL RELATED ACCESSORIES. RUN 2" W (2 FU) DOWN AND 1-1/2" V (2 FU) UP.
4. INSTALL URINAL WITH ALL RELATED ACCESSORIES. RUN 2" W (2 FU) DOWN AND 1-1/2" V (2 FU) UP. PROVIDE CLEANOUT ABOVE EACH URINAL.
5. INSTALL DRINKING FOUNTAIN WITH ALL RELATED ACCESSORIES. RUN 2" W (1 FU) DOWN AND 1-1/2" V (1 FU) UP.
6. INSTALL FLOOR DRAIN WITH ALL RELATED ACCESSORIES. RUN 2" W (0 FU) DOWN AND 1-1/2" V (0 FU) UP. PROVIDE TRAP PRIMER CONNECTION.

KEYNOTES

7. INSTALL EMERGENCY SHOWER AND EYEWASH WITH ALL RELATED ACCESSORIES. RUN 2" W (10 FU) DOWN AND 1-1/2" V (10 FU) UP.
8. 4" W SEWER POINT OF CONNECTION 5'-0" AWAY FROM THE BUILDING. REFER TO CIVIL PLANS FOR CONTINUATION.
9. INSTALL SERVICE SINK WITH ALL RELATED ACCESSORIES. RUN 3" W (3 FU) DOWN AND 2" V (3 FU) UP.
10. INSTALL SINK WITH ALL RELATED ACCESSORIES.RUN 2" W (2 FU) DOWN AND 1-1/2" V (2 FU) UP.
11. INSTALL KITCHEN SINK WITH ALL RELATED ACCESSORIES. RUN 2" W (2 FU) DOWN AND 1-1/2" V (2 FU) UP.
12. 4" STORM DRAIN POINT OF CONNECTION. REFER TO CIVIL PLANS FOR CONTINUATION.

KEYNOTES

13. 6" X 4" HUB DRAIN. 4" W (8 FU) DOWN AND 2" V (8 FU) UP. COORDINATE EXACT LOCATION WITH FIRE RISER TEST DRAIN.
14. 4" OVERFLOW DRAIN DROP IN WALL AND DAYLIGHT AT 18" ABOVE FINISHED GRADE.
15. INSTALL FLOOR SINK WITH ALL RELATED ACCESSORIES. RUN 2" W (0 FU) DOWN AND 1-1/2" V (0 FU) UP. PROVIDE TRAP PRIMER CONNECTION.
16. 1" CONDENSATE DRAIN UP THROUGH ROOF.
17. 1" CONDENSATE DRAIN DROP IN WALL AND CONNECT TO SINK OR LAVATORY TAILPIECE.
18. 1" CONDENSATE DRAIN DISCHARGE INTO FLOOR SINK WITH 1" AIR GAP.
19. INSTALL CONDENSATE PUMP WITH ALL RELATED ACCESSORIES. RUN 3/4" PUMPED CONDENSATE UP TO ABOVE CEILING.
20. INSTALL DOWNSPOUT BOOT AND ROUTE 4" STORM DRAIN DOWN TO BELOW GRADE.

AGENCY

REVIEWED FOR CODE COMPLIANCE BY: WILLDAN ENGINEERING

Approval of these plans & specifications shall not be construed to be a permit for, or an approval of any violation of any Federal, State, County or City laws or ordinances. One set of approved plans must be kept on the job until completion.

9:27:55 AM Jul 21, 2025

FLEWELLING & MOODY
architecture planning interiors

HEADQUARTERS OFFICE:
99 S. Lake Avenue, Suite 300
Pasadena, CA 91101
Phone: 323.543.8300
E-Mail: fm-pasadena@flewelling-moody.com

ANTELOPE VALLEY OFFICE:
1035 West Lancaster Bouldvard
Lancaster, California 93534
Phone: 661.949.0771
E-Mail: fm-lancaster@flewelling-moody.com

An Employee Owned Corporation

ARCHITECT

CONSULTANT

Budlong
An MBE|SBE|DBE|LSBE Firm
Glendale|Downtown LA|Fremont|Camarillo
W W W . B U D L O N G . C O M

Job No. 23-140

REGISTERED PROFESSIONAL ENGINEER CIVIL PATEL No. 29448 EXP. 06-30-25 STATE OF CALIFORNIA

Drawn by: Author

Check by: Checker

Revisions

No.	Date	Description
	01/26/24	100% DD
	03/01/24	50% CD
	05/09/24	90% CD
	08/05/24	100% CD
	11/25/24	100% CD V2
	01/31/25	100% CD V3

All dimensions must be checked at the job by the contractor who accepts full responsibility for their accuracy under the contract. These plans & the specifications in connection therewith have been prepared for a specific site. Any and all responsibility for their use in whole or in part on any other site is hereby disclaimed by Flewelling & Moody.

CITY OF RIDGECREST

SGT. JOHN PINNEY MEMORIAL POOL REPLACEMENT

205 S WARNER ST, RIDGECREST, CA 93555

Drawing Title

PLUMBING COMMUNITY BUILDING WASTE AND VENT FLOOR PLAN

Job No. 3055-0100

Sheet No. P2.03

Date 05/09/2025

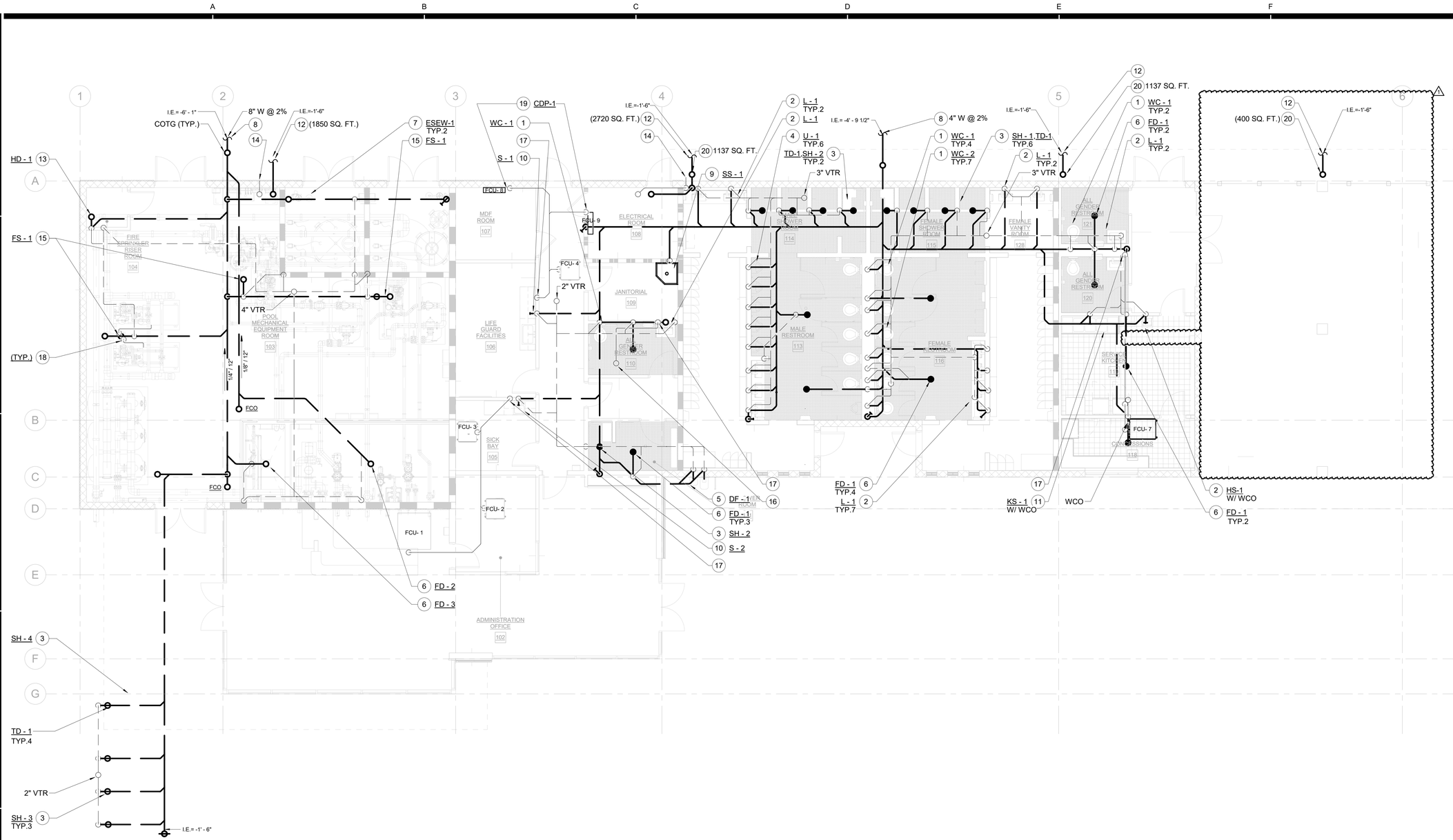

PLUMBING COMMUNITY BUILDING WASTE AND VENT FLOOR PLAN ALT 6

SCALE: 3/16" = 1'-0"

1 P2.03A6

N

GENERAL NOTES

A. ALL PIPING ON THIS PLAN SHALL BE CONCEALED INSIDE THE WALL, FLOOR OR CEILING UNLESS NOTED OTHERWISE.

B. REFER TO RISER DIAGRAMS FOR PIPE SIZES.

C. RUN ALL WASTE PIPING AT 2% SLOPE.

D. ALL FIXTURES SHALL BE TRAPPED AND VENTED.

KEYNOTES

1. INSTALL WATER CLOSET WITH ALL RELATED ACCESSORIES. RUN 4" W (4 FU) DOWN AND 2" V (4 FU) UP.
2. INSTALL LAVATORY/HAND SINK WITH ALL RELATED ACCESSORIES. RUN 2" W (1 FU) DOWN AND 1-1/2" V (1 FU) UP.
3. INSTALL SHOWER TRENCH DRAIN WITH ALL RELATED ACCESSORIES. RUN 2" W (2 FU) DOWN AND 1-1/2" V (2 FU) UP.
4. INSTALL URINAL WITH ALL RELATED ACCESSORIES. RUN 2" W (2 FU) DOWN AND 1-1/2" V (2 FU) UP. PROVIDE CLEANOUT ABOVE EACH URINAL.
5. INSTALL DRINKING FOUNTAIN WITH ALL RELATED ACCESSORIES. RUN 2" W (1 FU) DOWN AND 1-1/2" V (1 FU) UP.
6. INSTALL FLOOR DRAIN WITH ALL RELATED ACCESSORIES. RUN 2" W (0 FU) DOWN AND 1-1/2" V (0 FU) UP. PROVIDE TRAP PRIMER CONNECTION.

KEYNOTES

7. INSTALL EMERGENCY SHOWER AND EYEWASH WITH ALL RELATED ACCESSORIES. RUN 2" W (10 FU) DOWN AND 1-1/2" V (10 FU) UP.
8. 4" W SEWER POINT OF CONNECTION 5'-0" AWAY FROM THE BUILDING. REFER TO CIVIL PLANS FOR CONTINUATION.
9. INSTALL SERVICE SINK WITH ALL RELATED ACCESSORIES. RUN 3" W (3 FU) DOWN AND 2" V (3 FU) UP.
10. INSTALL SINK WITH ALL RELATED ACCESSORIES.RUN 2" W (2 FU) DOWN AND 1-1/2" V (2 FU) UP.
11. INSTALL KITCHEN SINK WITH ALL RELATED ACCESSORIES. RUN 2" W (2 FU) DOWN AND 1-1/2" V (2 FU) UP.
12. 4" STORM DRAIN POINT OF CONNECTION. REFER TO CIVIL PLANS FOR CONTINUATION.

KEYNOTES

13. 6" X 4" HUB DRAIN. 4" W (8 FU) DOWN AND 2" V (8 FU) UP. COORDINATE EXACT LOCATION WITH FIRE RISER TEST DRAIN.
14. 4" OVERFLOW DRAIN DROP IN WALL AND DAYLIGHT AT 18" ABOVE FINISHED GRADE.
15. INSTALL FLOOR SINK WITH ALL RELATED ACCESSORIES. RUN 2" W (0 FU) DOWN AND 1-1/2" V (0 FU) UP. PROVIDE TRAP PRIMER CONNECTION.
16. 1" CONDENSATE DRAIN UP THROUGH ROOF.
17. 1" CONDENSATE DRAIN DROP IN WALL AND CONNECT TO SINK OR LAVATORY TAILPIECE.
18. 1" CONDENSATE DRAIN DISCHARGE INTO FLOOR SINK WITH 1" AIR GAP.
19. INSTALL CONDENSATE PUMP WITH ALL RELATED ACCESSORIES. RUN 3/4" PUMPED CONDENSATE UP TO ABOVE CEILING.
20. INSTALL DOWNSPOUT BOOT AND ROUTE 4" STORM DRAIN DOWN TO BELOW GRADE.

AGENCY

FLEWELLING & MOODY
architecture planning interiors

HEADQUARTERS OFFICE:
99 S. Lake Avenue, Suite 300
Pasadena, CA 91101
Phone: 323.543.8300
E-Mail: fm-pasadena@flewelling-moody.com

ANTELOPE VALLEY OFFICE:
1035 West Lancaster Bouldvard
Lancaster, California 93534
Phone: 661.949.0771
E-Mail: fm-lancaster@flewelling-moody.com

An Employee Owned Corporation

ARCHITECT

CONSULTANT

Budlong
An MBE|SBE|DBE|LSBE Firm
Glendale|Downtown LA|Fremont|Camarillo
W W W . B U D L O N G . C O M
Job No. 23-140

REGISTERED PROFESSIONAL ENGINEER CIVIL PATEL No. 29448 EXP. 06-30-25 STATE OF CALIFORNIA

Drawn by: Author

Check by: Checker

Revisions

No.	Date	Description
	01/26/24	100% DD
	03/01/24	50% CD
	05/09/24	90% CD
	08/05/24	100% CD
	11/25/24	100% CD V2
	01/31/25	100% CD V3
1	08/27/2025	BID ALTERNATE

All dimensions must be checked at the job by the contractor who accepts full responsibility for their accuracy under the contract. These plans & the specifications in connection therewith have been prepared for a specific site. Any and all responsibility for their use in whole or in part on any other site is hereby disclaimed by Flewelling & Moody.

CITY OF RIDGECREST

SGT. JOHN PINNEY MEMORIAL POOL REPLACEMENT

205 S WARNER ST, RIDGECREST, CA 93555

Drawing Title

PLUMBING COMMUNITY BUILDING WASTE AND VENT FLOOR PLAN ALT 6

Job No. 3055-0000

Sheet No. **P2.03A6**

Date 08/07/2024

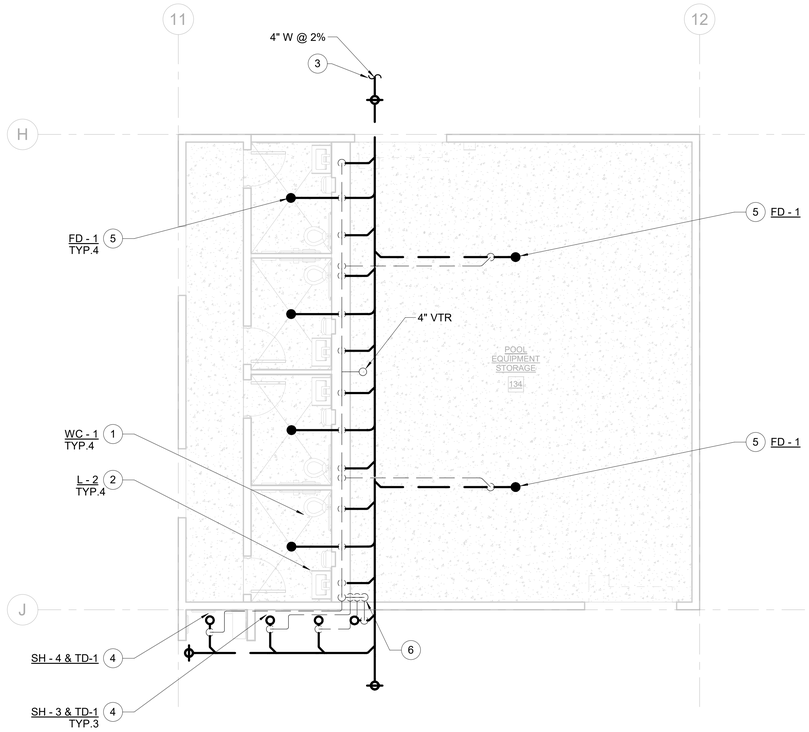

PLUMBING EQUIPMENT STORAGE WASTE AND VENT FLOOR PLAN

1
P2.04

SCALE: 3/16" = 1'-0"

N

GENERAL NOTES

A. ALL PIPING ON THIS PLAN SHALL BE CONCEALED INSIDE THE WALL, FLOOR OR CEILING UNLESS NOTED OTHERWISE.

B. REFER TO RISER DIAGRAMS FOR PIPE SIZES.

C. RUN ALL WASTE PIPING AT 2% SLOPE.

D. ALL FIXTURES SHALL BE TRAPPED AND VENTED.

KEYNOTES

1. INSTALL WATER CLOSET WITH ALL RELATED ACCESSORIES. RUN 4" W (4 FU) DOWN AND 2" V (4 FU) UP.
2. INSTALL LAVATORY WITH ALL RELATED ACCESSORIES. RUN 2" W (1 FU) DOWN AND 1-1/2" V (1 FU) UP.
3. 4" W SEWER POINT OF CONNECTION 5'-0" AWAY FROM THE BUILDING. REFER TO CIVIL PLANS FOR CONTINUATION.
4. INSTALL SHOWER TRENCH DRAIN WITH ALL RELATED ACCESSORIES. RUN 2" W (2 FU) DOWN AND 1-1/2" V (2 FU) UP.
5. INSTALL FLOOR DRAIN WITH ALL RELATED ACCESSORIES. RUN 2" W (2 FU) DOWN AND 2" V (2 FU) BELOW FLOOR AND RISE IN WALL.
6. 2" VENT FROM BELOW GRADE AND RISE UP TO 3'-0" ABOVE FINISHED FLOOR AND MANIFOLD AND RISE 2" V TO UNDERSIDE OF STRUCTURE.

AGENCY

REVIEWED FOR CODE COMPLIANCE BY:
WILLDAN ENGINEERING

Approval of these plans & specifications shall not be construed to be a permit for, or an approval of any violation of any Federal, State, County or City laws or ordinances. One set of approved plans must be kept on the job until completion.

9:27:57 AM Jul 21, 2025

FLEWELLING & MOODY
architecture planning interiors

HEADQUARTERS OFFICE:
99 S. Lake Avenue, Suite 300
Pasadena, CA 91101
Phone: 323.543.8300
E-Mail: fm-pasadena@flewelling-moody.com

ANTELOPE VALLEY OFFICE:
1035 West Lancaster Boulevard
Lancaster, California 93534
Phone: 661.949.0771
E-Mail: fm-lancaster@flewelling-moody.com

An Employee Owned Corporation

ARCHITECT

CONSULTANT

Budlong
An MBE|SBE|DBE|LSBE Firm
Glendale|Downtown LA|Fremont|Camarillo
W W W . B U D L O N G . C O M
Job No. 23-140

REGISTERED PROFESSIONAL ENGINEER
SUNIL PATEL
No. 29448
EXP. 06-30-25
STATE OF CALIFORNIA

Drawn by: Author

Check by: Checker

Revisions

No.	Date	Description
	01/26/24	100% DD
	03/01/24	50% CD
	05/09/24	90% CD
	08/05/24	100% CD
	11/25/24	100% CD V2
	01/31/25	100% CD V3

All dimensions must be checked at the job by the contractor who accepts full responsibility for their accuracy under the contract. These plans & the specifications in connection therewith have been prepared for a specific site. Any and all responsibility for their use in whole or in part on any other site is hereby disclaimed by Flewelling & Moody.

CITY OF RIDGECREST

SGT. JOHN PINNEY MEMORIAL POOL REPLACEMENT

205 S WARNER ST, RIDGECREST, CA 93555

Drawing Title

PLUMBING EQUIPMENT STORAGE WASTE AND VENT FLOOR PLAN

Job No. 3055-0100

Sheet No. **P2.04**

Date 05/09/2025

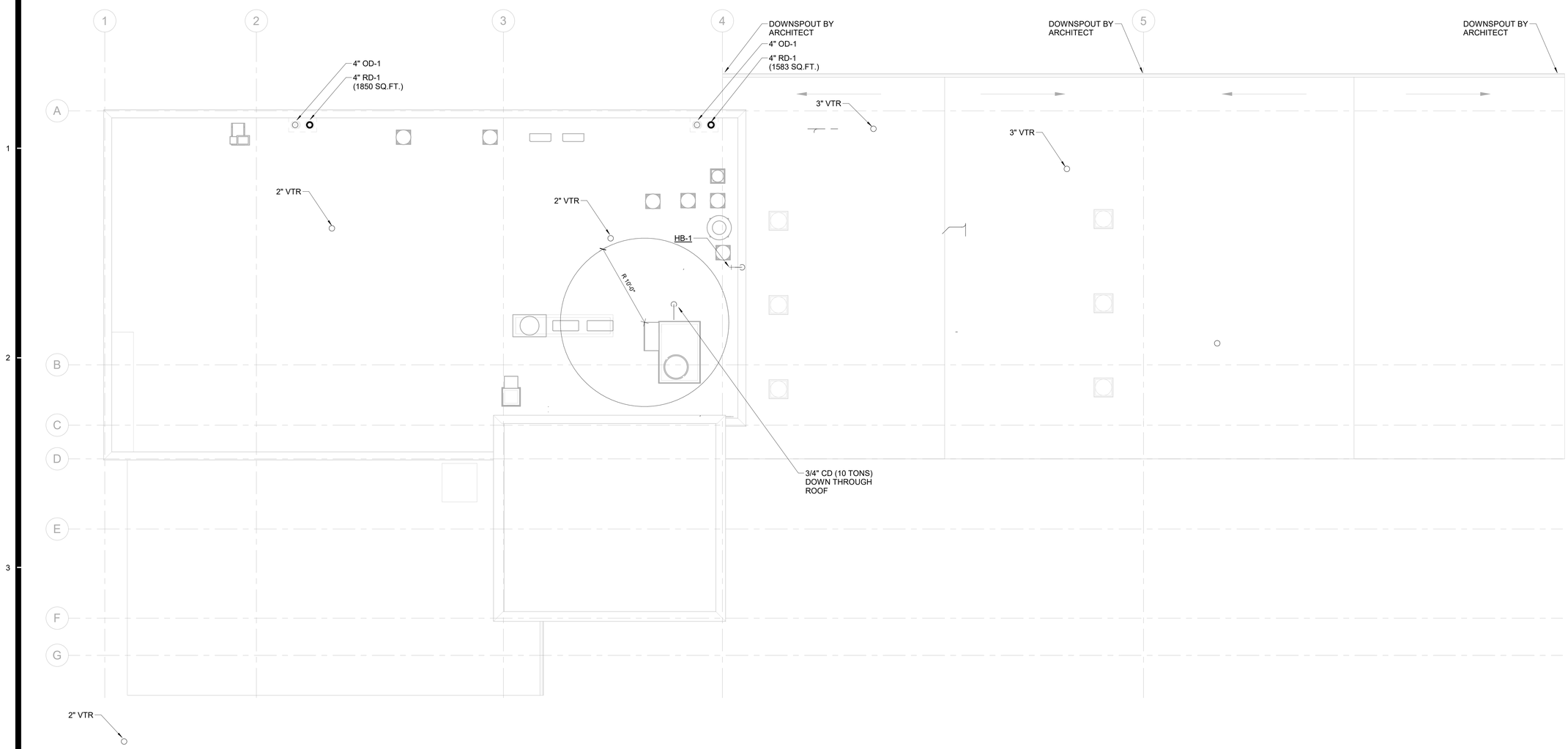

PLUMBING COMMUNITY BUILDING ROOF PLAN

SCALE: 3/16" = 1'-0"

1 P2.05

N

GENERAL NOTES

A. OVERFLOW DRAINS SHALL HAVE SAME PIPE SIZE AS ROOF DRAINS AND SHALL BE INSTALLED WITH THE INLET FLOW LINE LOCATED 2" INCHES ABOVE THE LOW POINT OF THE ROOF.

B. ROOF DRAINS AND OVER FLOW (FIXTURES) SHALL BE IAPMO LISTED.

AGENCY

REVIEWED FOR CODE COMPLIANCE BY:
WILLDAN ENGINEERING

Approval of these plans & specifications shall not be construed to be a permit for, or an approval of any violation of any Federal, State, County or City laws or ordinances. One set of approved plans must be kept on the job until completion.

9:27:58 AM Jul 21, 2025

FLEWELLING & MOODY
architecture planning interiors

HEADQUARTERS OFFICE:
99 S. Lake Avenue, Suite 300
Pasadena, CA 91101
Phone: 323.543.8300
E-Mail: fm-pasadena@flewelling-moody.com

ANTELOPE VALLEY OFFICE:
1035 West Lancaster Boulevard
Lancaster, California 93534
Phone: 661.949.0771
E-Mail: fm-lancaster@flewelling-moody.com

An Employee Owned Corporation

ARCHITECT

CONSULTANT

Budlong
An MBE|SBE|DBE|LSBE Firm
Glendale|Downtown LA|Fremont|Camarillo
W W W . B U D L O N G . C O M
Job No. 23-140

REGISTERED PROFESSIONAL ENGINEER
CIVIL
No. 29448
EXP. 06-30-25
STATE OF CALIFORNIA

Drawn by: Author

Check by: Checker

Revisions

No.	Date	Description
	01/26/24	100% DD
	03/01/24	50% CD
	05/09/24	90% CD
	08/05/24	100% CD
	11/25/24	100% CD V2
	01/31/25	100% CD V3

All dimensions must be checked at the job by the contractor who accepts full responsibility for their accuracy under the contract. These plans & the specifications in connection therewith have been prepared for a specific site. Any and all responsibility for their use in whole or in part on any other site is hereby disclaimed by Flewelling & Moody.

CITY OF RIDGECREST

SGT. JOHN PINNEY MEMORIAL POOL REPLACEMENT

205 S WARNER ST, RIDGECREST, CA 93555

Drawing Title

PLUMBING COMMUNITY BUILDING ROOF PLAN

Job No. 3055-0100

Sheet No. **P2.05**

Date 05/09/2025

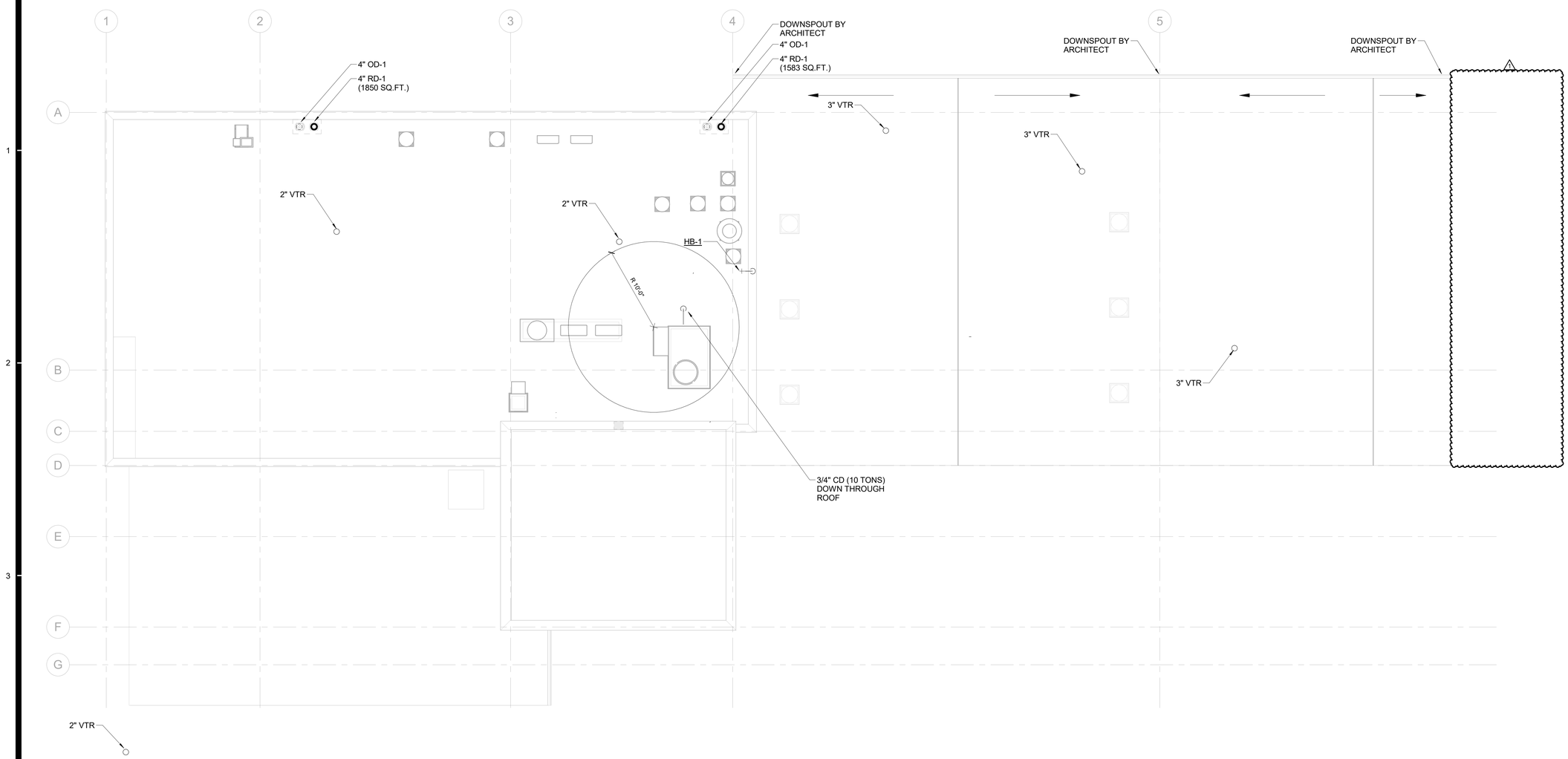

PLUMBING COMMUNITY BUILDING ROOF PLAN - Sheet P2.05A6

SCALE: 3/16" = 1'-0"

1 P2.05A6

N

GENERAL NOTES

A. OVERFLOW DRAINS SHALL HAVE SAME PIPE SIZE AS ROOF DRAINS AND SHALL BE INSTALLED WITH THE INLET FLOW LINE LOCATED 2" INCHES ABOVE THE LOW POINT OF THE ROOF.

B. ROOF DRAINS AND OVER FLOW (FIXTURES) SHALL BE IAPMO LISTED.

AGENCY

FLEWELLING & MOODY
architecture planning interiors

HEADQUARTERS OFFICE:
99 S. Lake Avenue, Suite 300
Pasadena, CA 91101
Phone: 323.543.8300
E-Mail: fm-pasadena@flewelling-moody.com

ANTELOPE VALLEY OFFICE:
1035 West Lancaster Bouldvard
Lancaster, California 93534
Phone: 661.949.0771
E-Mail: fm-lancaster@flewelling-moody.com

An Employee Owned Corporation

ARCHITECT

CONSULTANT

Budlong
An MBE|SBE|DBE|LSBE Firm
Glendale|Downtown LA|Fremont|Camarillo
W W W . B U D L O N G . C O M
Job No. 23-140

REGISTERED PROFESSIONAL ENGINEER
CONTL PATEL
No. 29448
EXP. 06-30-25
CIVIL
STATE OF CALIFORNIA

Drawn by: Author

Check by: Checker

Revisions

No.	Date	Description
	01/26/24	100% DD
	03/01/24	50% CD
	05/09/24	90% CD
	08/05/24	100% CD
	11/25/24	100% CD V2
	01/31/25	100% CD V3
1	08/27/2025	BID ALTERNATE

All dimensions must be checked at the job by the contractor who accepts full responsibility for their accuracy under the contract. These plans & the specifications in connection therewith have been prepared for a specific site. Any and all responsibility for their use in whole or in part on any other site is hereby disclaimed by Flewelling & Moody.

CITY OF RIDGECREST

SGT. JOHN PINNEY MEMORIAL POOL REPLACEMENT

205 S WARNER ST, RIDGECREST, CA 93555

Drawing Title

PLUMBING COMMUNITY BUILDING ROOF PLAN ALT 6

Job No. 3055-0000

Date 08/07/2024

Sheet No. **P2.05A6**

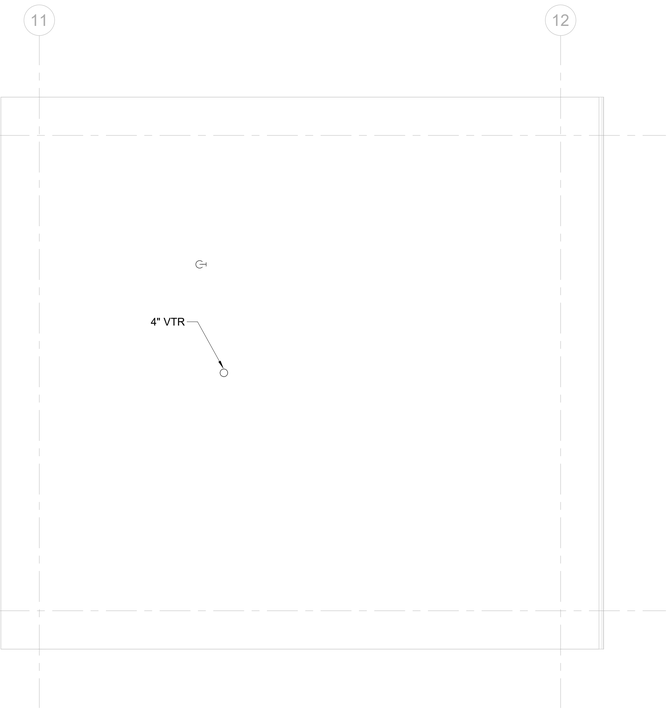

PLUMBING EQUIPMENT STORAGE ROOF PLAN

SCALE: 3/16" = 1'-0"

1
P2.06

N

GENERAL NOTES

A. OVERFLOW DRAINS SHALL HAVE SAME PIPE SIZE AS ROOF DRAINS AND SHALL BE INSTALLED WITH THE INLET FLOW LINE LOCATED 2" INCHES ABOVE THE LOW POINT OF THE ROOF.

B. ROOF DRAINS AND OVER FLOW (FIXTURES) SHALL BE IAPMO LISTED.

AGENCY

REVIEWED FOR CODE COMPLIANCE BY: WILLDAN ENGINEERING

Approval of these plans & specifications shall not be construed to be a permit for, or an approval of any violation of any Federal, State, County or City laws or ordinances. One set of approved plans must be kept on the job until completion.

9:28:00 AM Jul 21, 2025

FLEWELLING & MOODY
architecture planning interiors

HEADQUARTERS OFFICE:
99 S. Lake Avenue, Suite 300
Pasadena, CA 91101
Phone: 323.543.8300
E-Mail: fm-pasadena@flewelling-moody.com

ANTELOPE VALLEY OFFICE:
1035 West Lancaster Bouldvard
Lancaster, California 93534
Phone: 661.949.0771
E-Mail: fm-lancaster@flewelling-moody.com

An Employee Owned Corporation

ARCHITECT

CONSULTANT

Budlong
An MBE|SBE|DBE|LSBE Firm
Glendale|Downtown LA|Fremont|Camarillo
W W W . B U D L O N G . C O M
Job No. 23-140

REGISTERED PROFESSIONAL ENGINEER
CONTL PATEL
No. 29448
EXP. 06-30-25
CIVIL
STATE OF CALIFORNIA

Drawn by: Author

Check by: Checker

Revisions

No.	Date	Description
	01/26/24	100% DD
	03/01/24	50% CD
	05/09/24	90% CD
	08/05/24	100% CD
	11/25/24	100% CD V2
	01/31/25	100% CD V3

All dimensions must be checked at the job by the contractor who accepts full responsibility for their accuracy under the contract. These plans & the specifications in connection therewith have been prepared for a specific site. Any and all responsibility for their use in whole or in part on any other site is hereby disclaimed by Flewelling & Moody.

CITY OF RIDGECREST

SGT. JOHN PINNEY MEMORIAL POOL REPLACEMENT

205 S WARNER ST, RIDGECREST, CA 93555

Drawing Title

PLUMBING EQUIPMENT STORAGE ROOF PLAN

Job No. 3055-0100

Sheet No. **P2.06**

Date 05/09/2025

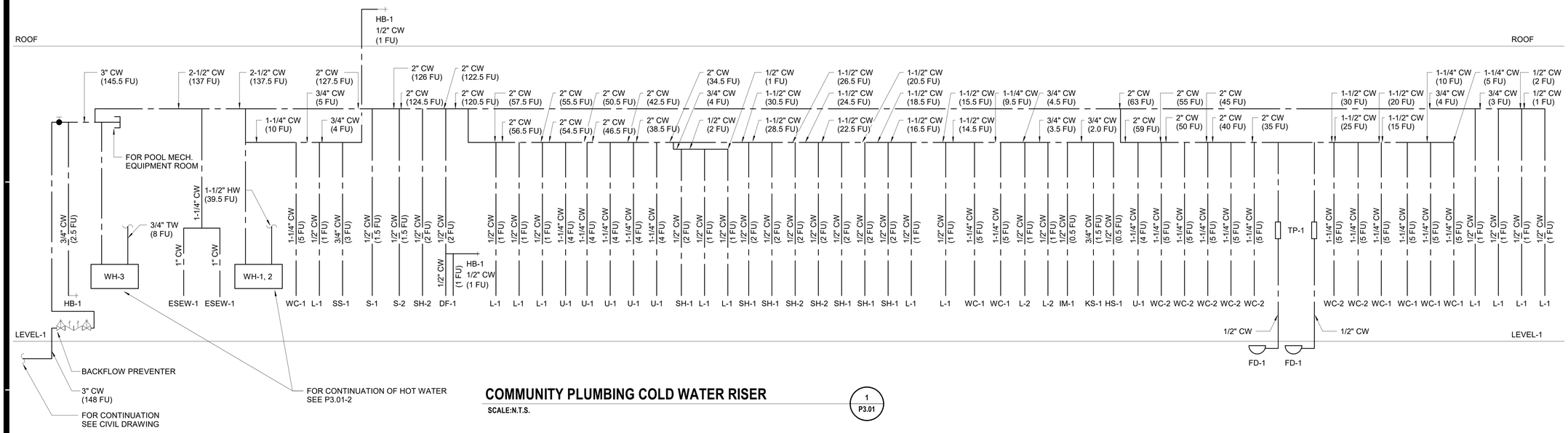

COMMUNITY PLUMBING COLD WATER RISER

SCALE:N.T.S.

1 P3.01

COMMUNITY PLUMBING HOT WATER RISER

SCALE:N.T.S.

2 P3.01

POOL EQUIPMENT PLUMBING COLD AND HOT WATER RISER

SCALE:N.T.S.

3 P3.01

PIPE SIZE SCHEDULE	
LOW PRESSURE GAS SIZING CHART	
PRESSURE LOSS: 0.5	TDL:150 FT
SIZE (INCHES)	MAXIMUM CFH
1/2"	40
3/4"	83
1"	157
1-1/4"	322
1-1/2"	482
2"	928
2-1/2"	1480
3"	2610
4"	5330
5"	9650

COMMUNITY PLUMBING GAS RISER DIAGRAMS

SCALE:NTS

4 P3.01

AGENCY

REVIEWED FOR CODE COMPLIANCE BY: WILLDAN ENGINEERING

Approval of these plans & specifications shall not be construed to be a permit for, or an approval of any violation of any Federal, State, County or City laws or ordinances. One set of approved plans must be kept on the job until completion.

9:28:01 AM Jul 21, 2025

FLEWELLING & MOODY
architecture planning interiors

HEADQUARTERS OFFICE:
99 S. Lake Avenue, Suite 300
Pasadena, CA 91101
Phone: 323.543.8300
E-Mail: fm-pasadena@flewelling-moody.com

ANTELOPE VALLEY OFFICE:
1035 West Lancaster Boulevard
Lancaster, California 93534
Phone: 661.949.0771
E-Mail: fm-lancaster@flewelling-moody.com

An Employee Owned Corporation

ARCHITECT

CONSULTANT

Budlong
An MBE|SBE|DBE|LSBE Firm
Glendale|Downtown LA|Fremont|Camarillo
W W W . B U D L O N G . C O M
Job No. 23-140

REGISTERED PROFESSIONAL ENGINEER SUNIL PATEL No. 29448 EXP. 06-30-25 STATE OF CALIFORNIA

Drawn by: Author

Check by: Checker

Revisions

No.	Date	Description
	01/26/24	100% DD
	03/01/24	50% CD
	05/09/24	90% CD
	08/05/24	100% CD
	11/25/24	100% CD V2
	01/31/25	100% CD V3

All dimensions must be checked at the job by the contractor who accepts full responsibility for their accuracy under the contract. These plans & the specifications in connection therewith have been prepared for a specific site. Any and all responsibility for their use in whole or in part on any other site is hereby disclaimed by Flewelling & Moody.

CITY OF RIDGECREST

SGT. JOHN PINNEY MEMORIAL POOL REPLACEMENT

205 S WARNER ST, RIDGECREST, CA 93555

Drawing Title

PLUMBING WATER AND GAS RISER

Job No. 3055-0100

Sheet No. P3.01

Date 05/09/2025

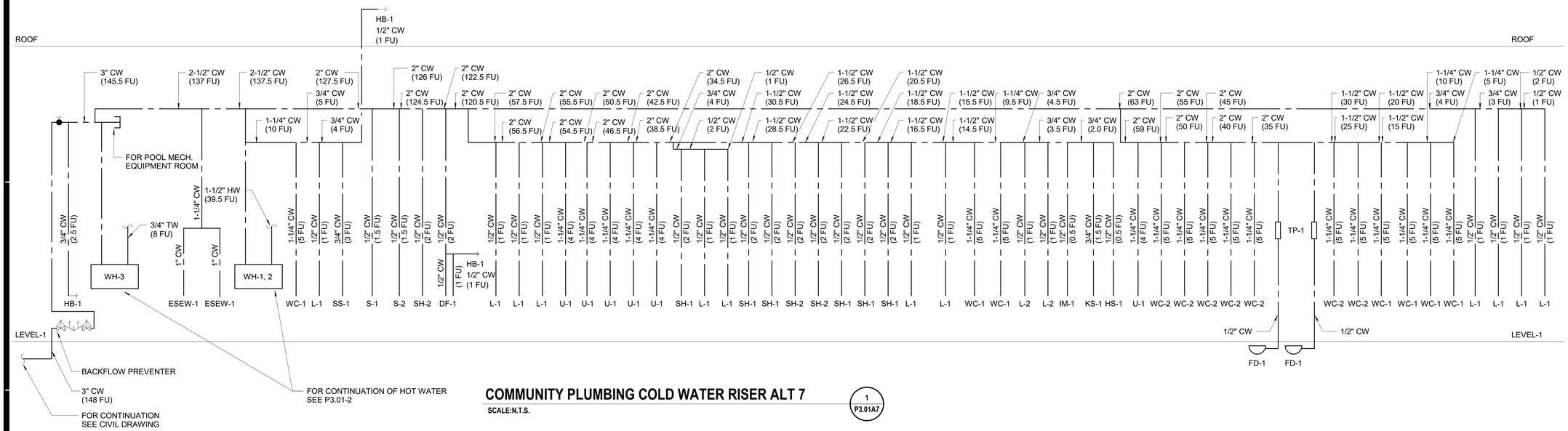
ROOF
HB-1
1/2" CW
(1 FU)
3" CW
(145.5 FU)
2-1/2" CW
(137 FU)
2-1/2" CW
(137.5 FU)
2" CW
(127.5 FU)
3/4" CW
(5 FU)
2" CW
(126 FU)
2" CW
(124.5 FU)
2" CW
(122.5 FU)
2" CW
(120.5 FU)
2" CW
(57.5 FU)
2" CW
(56.5 FU)
2" CW
(55.5 FU)
2" CW
(54.5 FU)
2" CW
(50.5 FU)
2" CW
(46.5 FU)
2" CW
(42.5 FU)
2" CW
(38.5 FU)
2" CW
(34.5 FU)
3/4" CW
(4 FU)
1/2" CW
(2 FU)
1/2" CW
(1 FU)
1-1/2" CW
(30.5 FU)
1-1/2" CW
(28.5 FU)
1-1/2" CW
(26.5 FU)
1-1/2" CW
(24.5 FU)
1-1/2" CW
(22.5 FU)
1-1/2" CW
(20.5 FU)
1-1/2" CW
(18.5 FU)
1-1/2" CW
(16.5 FU)
1-1/2" CW
(15.5 FU)
1-1/2" CW
(14.5 FU)
1-1/4" CW
(9.5 FU)
3/4" CW
(4.5 FU)
3/4" CW
(3.5 FU)
3/4" CW
(2.0 FU)
2" CW
(63 FU)
2" CW
(59 FU)
2" CW
(55 FU)
2" CW
(50 FU)
2" CW
(45 FU)
2" CW
(40 FU)
2" CW
(35 FU)
1-1/2" CW
(30 FU)
1-1/2" CW
(25 FU)
1-1/2" CW
(20 FU)
1-1/2" CW
(15 FU)
1-1/4" CW
(10 FU)
3/4" CW
(4 FU)
1-1/4" CW
(5 FU)
3/4" CW
(3 FU)
1/2" CW
(2 FU)
1/2" CW
(1 FU)
FOR POOL MECH.
EQUIPMENT ROOM
1-1/4" CW
(10 FU)
3/4" CW
(4 FU)
3/4" CW
(2.5 FU)
1-1/4" CW
1-1/2" HW
(39.5 FU)
3/4" TW
(8 FU)
1" CW
1" CW
WH-3
WH-1, 2
1-1/4" CW
(5 FU)
1/2" CW
(1 FU)
3/4" CW
(3 FU)
1/2" CW
(1.5 FU)
1/2" CW
(2 FU)
1/2" CW
(1 FU)
1/2" CW
(1 FU)
1-1/4" CW
(4 FU)
1-1/4" CW
(4 FU)
1-1/4" CW
(4 FU)
1-1/4" CW
(4 FU)
1-1/4" CW
(4 FU)
1/2" CW
(2 FU)
1/2" CW
(2 FU)
1/2" CW
(1 FU)
1/2" CW
(1 FU)
1/2" CW
(2 FU)
1/2" CW
(2 FU)
1/2" CW
(2 FU)
1/2" CW
(2 FU)
1/2" CW
(2 FU)
1/2" CW
(2 FU)
1/2" CW
(1 FU)
1/2" CW
(1 FU)
1-1/4" CW
(5 FU)
1-1/4" CW
(5 FU)
1/2" CW
(1 FU)
1/2" CW
(1 FU)
1/2" CW
(1 FU)
1/2" CW
(0.5 FU)
3/4" CW
(1.5 FU)
1/2" CW
(0.5 FU)
1-1/4" CW
(4 FU)
1-1/4" CW
(5 FU)
1-1/4" CW
(5 FU)
1-1/4" CW
(5 FU)
1-1/4" CW
(5 FU)
1-1/4" CW
(5 FU)
1-1/4" CW
(5 FU)
1-1/4" CW
(5 FU)
1-1/4" CW
(5 FU)
1-1/4" CW
(5 FU)
1-1/4" CW
(5 FU)
1-1/4" CW
(5 FU)
1-1/4" CW
(5 FU)
1-1/4" CW
(5 FU)
1-1/4" CW
(5 FU)
1-1/4" CW
(5 FU)
1/2" CW
(1 FU)
1/2" CW
(1 FU)
1/2" CW
(1

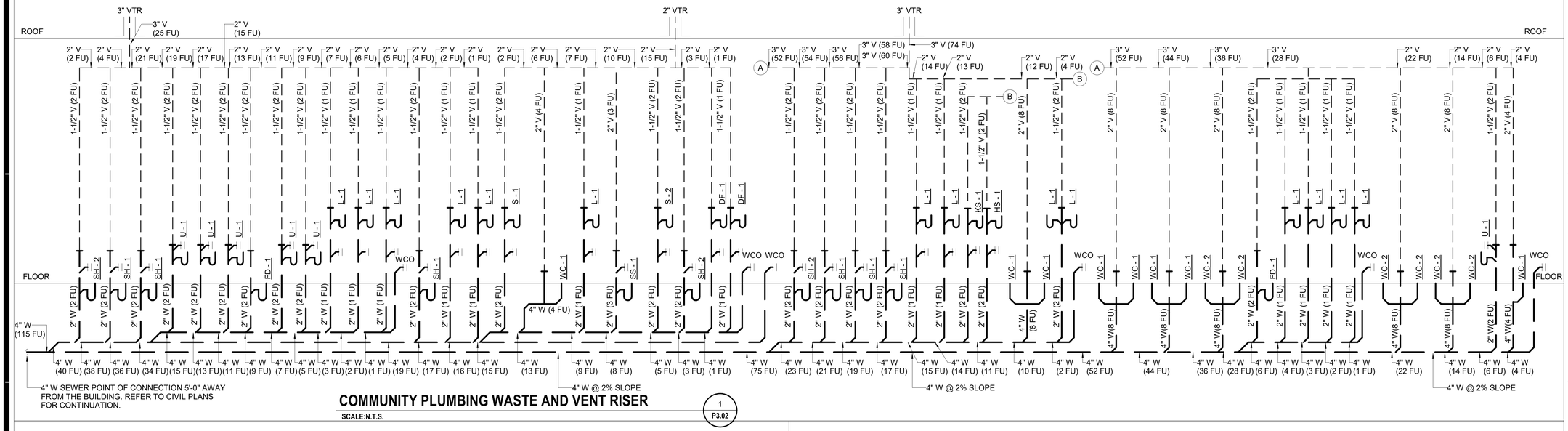

COMMUNITY PLUMBING WASTE AND VENT RISER

SCALE:N.T.S.

1 / P3.02

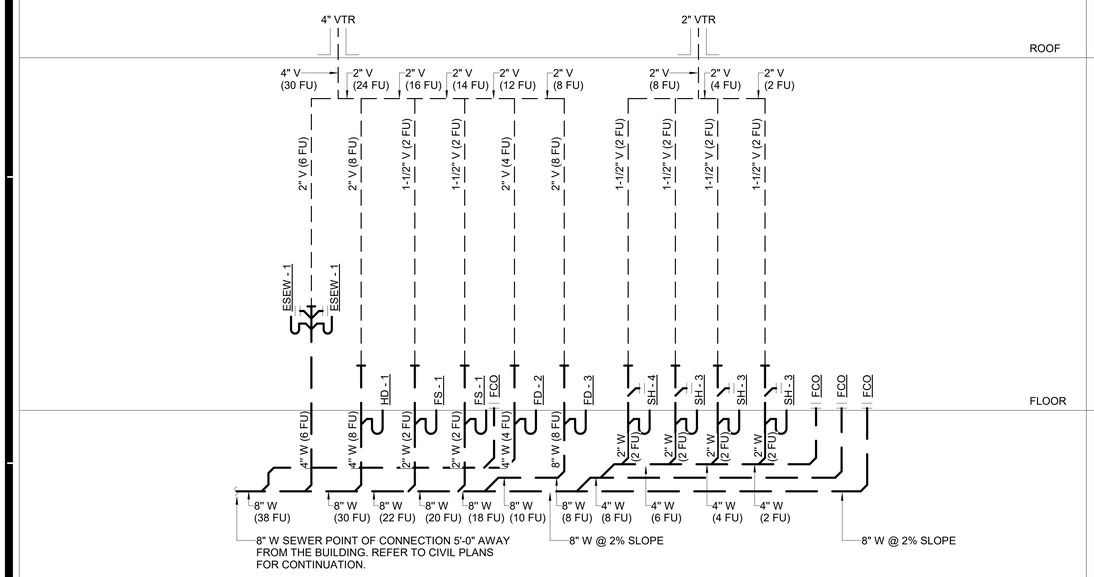

POOL MECHANICAL EQUIPMENT PLUMBING WASTE AND VENT RISER

SCALE:N.T.S.

2 / P3.02

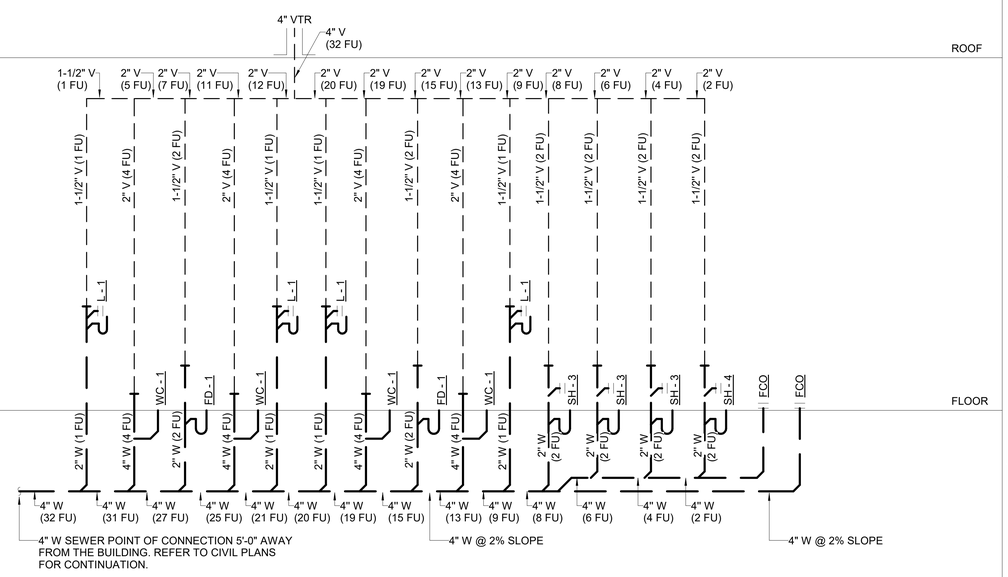

POOL EQUIPMENT STORAGE PLUMBING WASTE AND VENT RISER

SCALE:N.T.S.

3 / P3.02

AGENCY

REVIEWED FOR CODE COMPLIANCE BY: WILLDAN ENGINEERING

Approval of these plans & specifications shall not be construed to be a permit for, or an approval of any violation of any Federal, State, County or City laws or ordinances. One set of approved plans must be kept on the job until completion.

9:28:03 AM Jul 21, 2025

FLEWELLING & MOODY
architecture planning interiors

HEADQUARTERS OFFICE:
99 S. Lake Avenue, Suite 300
Pasadena, CA 91101
Phone: 323.543.8300
E-Mail: fm-pasadena@flewelling-moody.com

ANTELOPE VALLEY OFFICE:
1035 West Lancaster Boulevard
Lancaster, California 93534
Phone: 661.949.0771
E-Mail: fm-lancaster@flewelling-moody.com

An Employee Owned Corporation

ARCHITECT

CONSULTANT

Budlong
An MBE|SBE|DBE|LSBE Firm
Glendale|Downtown LA|Fremont|Camarillo
WWW.BUDLONG.COM
Job No. 23-140

REGISTERED PROFESSIONAL ENGINEER — SUNIL PATEL — No. 29448 — EXP. 06-30-25 — STATE OF CALIFORNIA

Drawn by: Author

Check by: Checker

Revisions

No.	Date	Description
	01/26/24	100% DD
	03/01/24	50% CD
	05/09/24	90% CD
	08/05/24	100% CD
	11/25/24	100% CD V2
	01/31/25	100% CD V3

All dimensions must be checked at the job by the contractor who accepts full responsibility for their accuracy under the contract. These plans & the specifications in connection therewith have been prepared for a specific site. Any and all responsibility for their use in whole or in part on any other site is hereby disclaimed by Flewelling & Moody.

CITY OF RIDGECREST

SGT. JOHN PINNEY MEMORIAL POOL REPLACEMENT

205 S WARNER ST, RIDGECREST, CA 93555

Drawing Title

PLUMBING WASTE AND VENT RISER

Job No. 3055-0100

Sheet No. P3.02

Date 05/09/2025

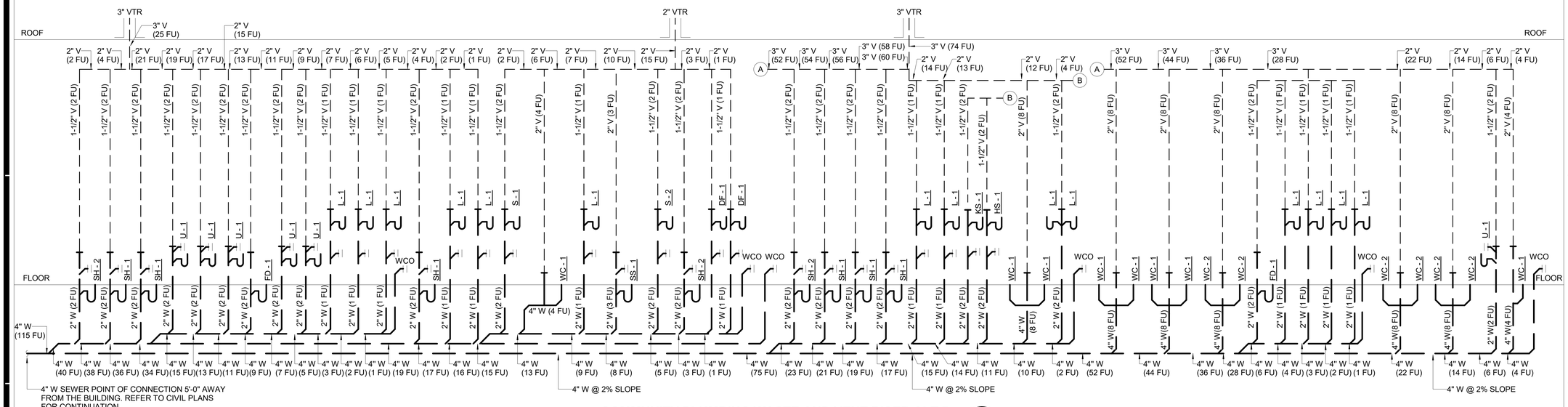

COMMUNITY PLUMBING WASTE AND VENT RISER ALT 7

SCALE:N.T.S.

1 P3.02A7

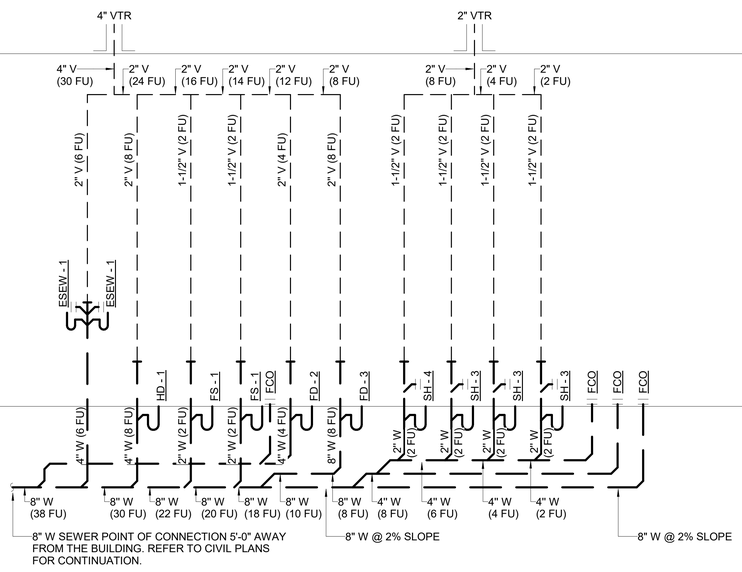

POOL MECHANICAL EQUIPMENT PLUMBING WASTE AND VENT RISER ALT 7

SCALE:N.T.S.

2 P3.02A7

AGENCY

FLEWELLING & MOODY
architecture planning interiors

HEADQUARTERS OFFICE:
99 S. Lake Avenue, Suite 300
Pasadena, CA 91101
Phone: 323.543.8300
E-Mail: fm-pasadena@flewelling-moody.com

ANTELOPE VALLEY OFFICE:
1035 West Lancaster Boulevard
Lancaster, California 93534
Phone: 661.949.0771
E-Mail: fm-lancaster@flewelling-moody.com

An Employee Owned Corporation

ARCHITECT

CONSULTANT

Budlong
An MBE|SBE|DBE|LSBE Firm
Glendale|Downtown LA|Fremont|Camarillo
W W W . B U D L O N G . C O M
Job No. 23-140

REGISTERED PROFESSIONAL ENGINEER
SUNIL PATEL
No. 29448
EXP. 06-30-25
MECHANICAL
STATE OF CALIFORNIA

Drawn by: Author

Check by: Checker

Revisions

No.	Date	Description
	01/26/24	100% DD
	03/01/24	50% CD
	05/09/24	90% CD
	08/05/24	100% CD
	11/25/24	100% CD V2
	01/31/25	100% CD V3
1	08/27/2025	BID ALTERNATE

All dimensions must be checked at the job by the contractor who accepts full responsibility for their accuracy under the contract. These plans & the specifications in connection therewith have been prepared for a specific site. Any and all responsibility for their use in whole or in part on any other site is hereby disclaimed by Flewelling & Moody.

CITY OF RIDGECREST

SGT. JOHN PINNEY MEMORIAL POOL REPLACEMENT

205 S WARNER ST, RIDGECREST, CA 93555

Drawing Title

PLUMBING WASTE AND VENT RISER ALT 7

Job No. 3055-0000

Sheet No. P3.02A7

Date 08/07/2024

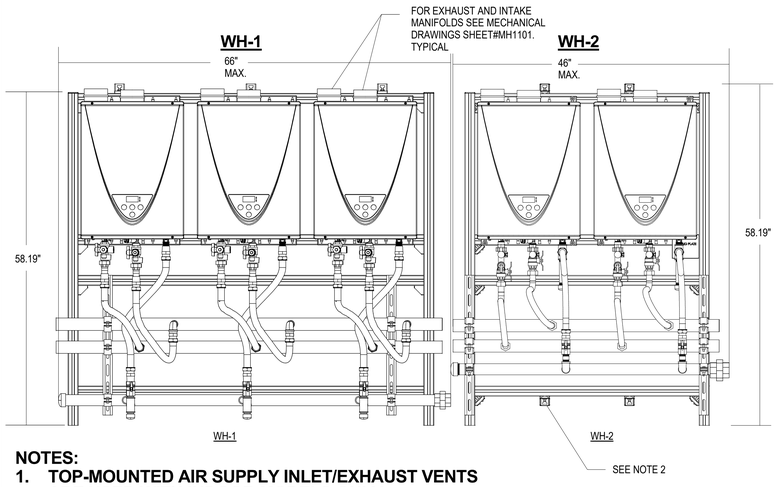

NOTES:

1. **TOP-MOUNTED AIR SUPPLY INLET/EXHAUST VENTS ARE USED WITH INDOOR MODELS ONLY.**
2. **MOUNTING BRACKETS ADJUST HORIZONTALLY ALONG CHANNEL SLOTS.**
3. **INDOOR AND OUTDOOR RACK SYSTEMS HAVE IDENTICAL DIMENSIONS. EXCEPTION: INDOOR MODELS HAVE TOP-MOUNTED INTAKES AND EXHAUSTS. OUTDOOR MODELS DO NOT.**
4. **SEE INSTALLATION MANUAL FOR MORE DETAILS.**

***Fittings to be field supplied**

1 3 & 2 UNIT WALL MOUNT WATER HEATER DIAGRAM
SCALE: NONE

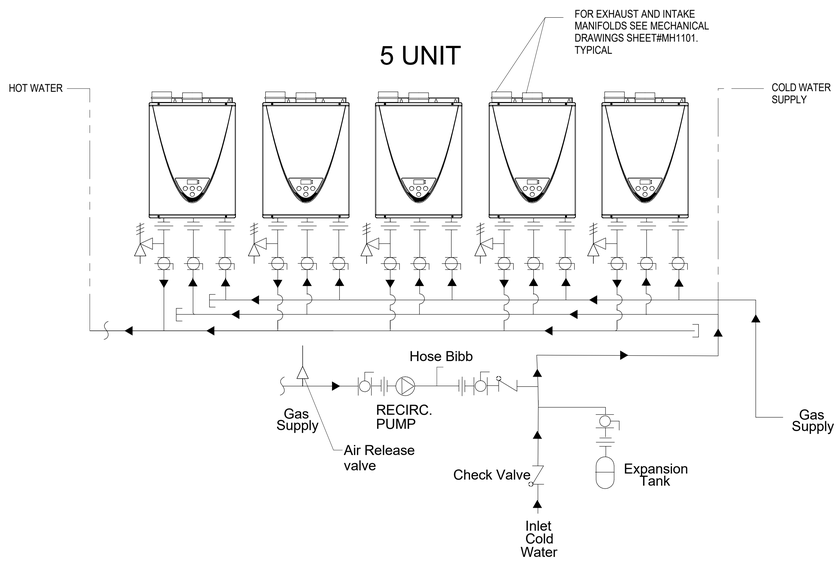

NOTES:

1. **HEADERS MUST BE SIZED FOR TOTAL CAPACITY. WATER LINES SHOULD BE GREATER THAN 2 INCHES.**
2. **GAS SUPPLY HEADER MUST BE SIZED BY CURRENT METHODS PERSUANT TO NFPA 54 AND TO SUPPLY TOTAL MAXIMUM INPUT FOR ALL WATER HEATERS.**
3. **IF THE APPLICATION CALLS FOR RECIRCULATION, INSTALL THE RECIRCULATION PUMP AS SHOWN ABOVE. THE RECIRCULATION PUMP SHOULD BE SIZED TO PROVIDE 2 TO 4 GPM PER ACTIVATED HEATER. THE PUMP SHOULD BE CONTROLLED WITH AN AQUASTAT. REFER TO THE WATER HEATER'S SPECIFICATION SHEET FOR PRESSURE DROP INFORMATION.**
4. **CHECK VALVE SHOWN AT INLET IS ONLY NEEDED IF A RECIRCULATION LINE IS INSTALLED. INSTALLATION MUST FOLLOW ALL APPLICABLE CODE REQUIREMENTS.**
5. **INSTALL WATER HEATER WITH MOUNTED BRACKET AND ANCHORAGE AS PER MANUFACTURER RECOMMENDATION.**

HOT WATER SYSTEM DELIVERY CALCULATION

COPPER TYPE L	NOM. DIAMETER	1/2"	3/4"	1"	1-1/4"	1-1/2"	2"
	MAXIMUM LENGTH	49' 6"	23' 10"	14' 0"	9' 2"	6' 6"	3' 8"
	GALLONS PER FOOT	0.012119	0.025142	0.042865	0.065289	0.092413	0.160729
COPPER TYPE L	NOM. DIAMETER	1/2"	3/4"	1"	1-1/4"	1-1/2"	2"
	MAXIMUM LENGTH	65' 1"	32' 8"	19' 7"	13' 2"	9' 6"	5' 6"
	GALLONS PER FOOT	0.009215	0.018353	0.030537	0.045376	0.063182	0.108246

HOT WATER DELIVERY SHALL NOT PROVIDE MORE THAN 0.6 GALLONS OF WATER TO ANY FIXTURE BEFORE HOT WATER ARRIVES.

2 3 & 4 UNIT WATER HEATER PIPING DIAGRAM
SCALE: NONE

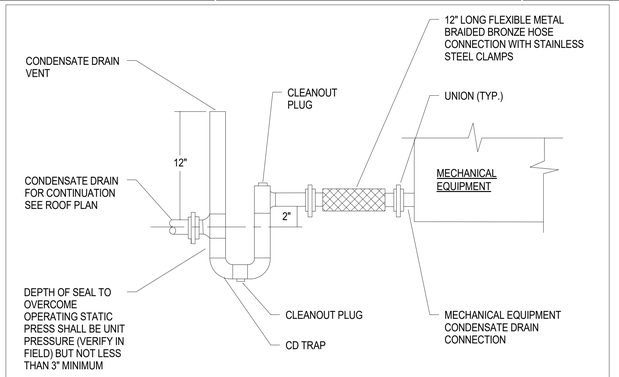

NOTE:

1. FOR PIPE SIZE SEE FLOOR PLAN.
2. PROVIDE CD PIPING PER SPECIFICATION DRAIN MECHANICAL EQUIPMENT CONNECTION AS REQUIRED.
3. MANUALLY PRIME TRAP TO PREVENT SAG.
4. INSULATE ALL CONDENSATE DRAIN PIPING

3 CONDENSATE DRAIN DIAGRAM
SCALE: NONE

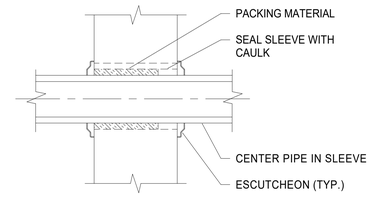

NOTE:

IN CONCRETE FIRE RATED WALLS PROVIDE "3M" U.L. TESTED SYSTEM #CAJ1044. INSTALL PER U.L. FIRE RESISTANCE DIRECTORY VOLUME 2.

4 WALL PENETRATION DIAGRAM
SCALE: NONE

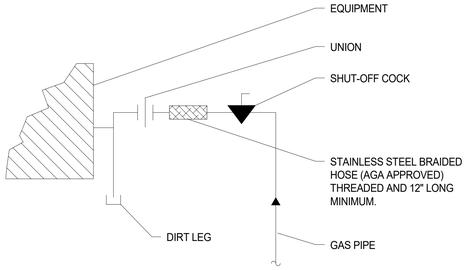

5 GAS CONNECTION DIAGRAM
SCALE: NONE

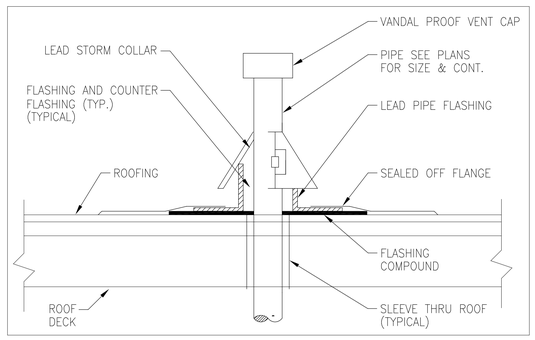

6 VENT PENETRATION DIAGRAM
SCALE: NONE

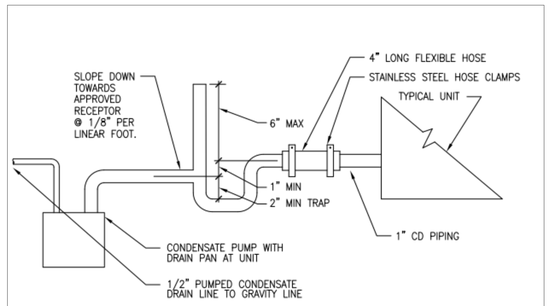

7 PUMPED CONDENSATE DRAIN
SCALE: NONE

AGENCY

REVIEWED FOR CODE COMPLIANCE BY: WILLDAN ENGINEERING

Approval of these plans & specifications shall not be construed to be a permit for, or an approval of any violation of any Federal, State, County or City laws or ordinances. One set of approved plans must be kept on the job until completion.

9:28:04 AM Jul 21, 2025

FLEWELLING & MOODY
architecture planning interiors

HEADQUARTERS OFFICE:
99 S. Lake Avenue, Suite 300
Pasadena, CA 91101
Phone: 323.543.8300
E-Mail: fm-pasadena@flewelling-moody.com

ANTELOPE VALLEY OFFICE:
1035 West Lancaster Bouldvard
Lancaster, California 93534
Phone: 661.949.0771
E-Mail: fm-lancaster@flewelling-moody.com

An Employee Owned Corporation

ARCHITECT

CONSULTANT

Budlong
An MBE|SBE|DBE|LSBE Firm
Glendale|Downtown LA|Fremont|Camarillo
W W W . B U D L O N G . C O M
Job No. 23-140

REGISTERED PROFESSIONAL ENGINEER — CIVIL — No. 29448 — EXP. 06-30-25 — STATE OF CALIFORNIA

Drawn by: Author

Check by: Checker

Revisions

No.	Date	Description
	01/26/24	100% DD
	03/01/24	50% CD
	05/09/24	90% CD
	08/05/24	100% CD
	11/25/24	100% CD V2
	01/31/25	100% CD V3

All dimensions must be checked at the job by the contractor who accepts full responsibility for their accuracy under the contract. These plans & the specifications in connection therewith have been prepared for a specific site. Any and all responsibility for their use in whole or in part on any other site is hereby disclaimed by Flewelling & Moody.

CITY OF RIDGECREST

SGT. JOHN PINNEY MEMORIAL POOL REPLACEMENT

205 S WARNER ST, RIDGECREST, CA 93555

Drawing Title

PLUMBING DETAILS

Job No. 3055-0100

Date 05/09/2025

Sheet No. **P6.01**

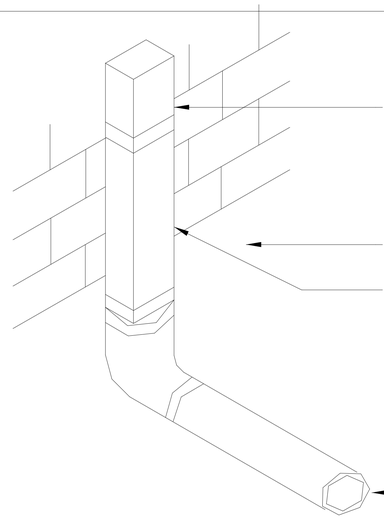

DOWNSPOUTS BY GENERAL CONTRACTOR, SEE ARCH. DRAWINGS.

GRADE

4" X 3" DOWNSPOUTS BOOT, DUA-COATED CAST IRON BODY AND STRAPS WITH NO-HUB OUTLET

RAIN WATER PIPING BELOW GRADE.

1 DOWNSPOUT BOOT DETAIL
SCALE: NONE

COMMON VENT TYPES

Horizontal (Side-By-Side)

A maximum of 8 condensing heaters may be common vented horizontally, in either an in-line or back-to-back configuration. The use of reducing wyes to join each heater's venting to the trunk line is preferred, however reducing tees are acceptable. The maximum length of the single exhaust vent line from the heater to the common vent header (trunk line) is 10 ft. (3 m), with only two elbows allowed. This vent size should be of 4 in. piping.

The exhaust piping should be sloped back to the heater 1/4 in. per foot (21mm per metre) or as per local code requirements.

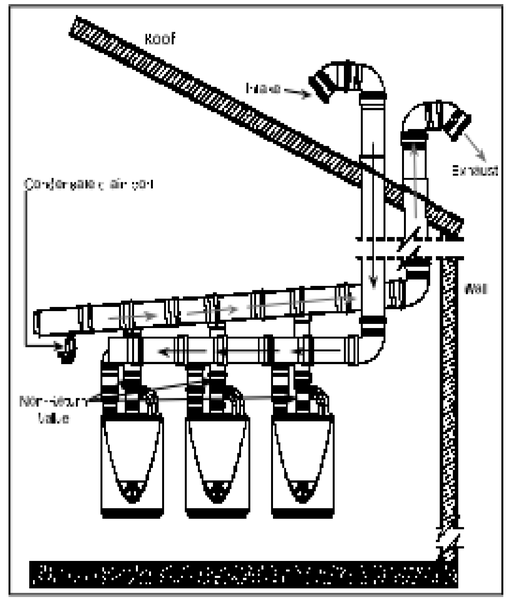

Figure 4. Typical Common-Vent Through The Roof Installation

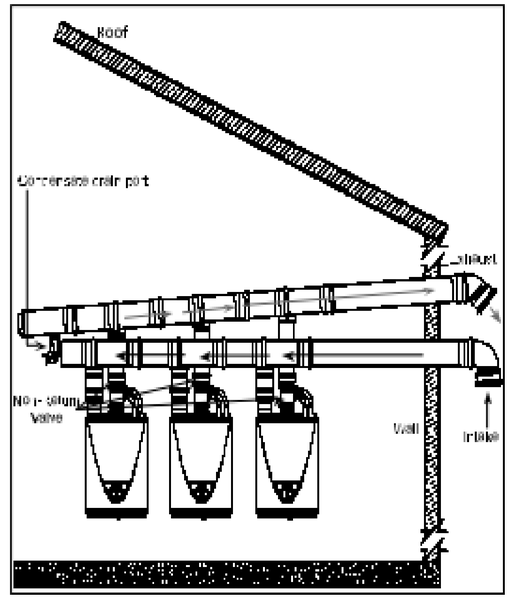

Figure 5. Typical Common-Vent Through The Wall Installation

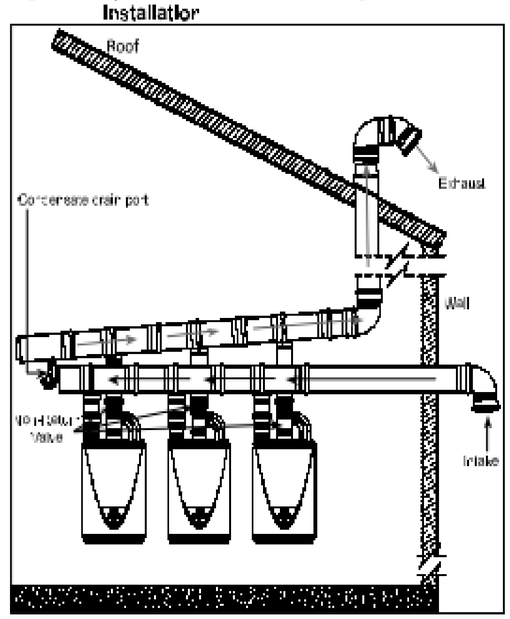

Figure 6. Typical Common-Vent Combination Wall / Roof Installation

100271266

AGENCY

REVIEWED FOR CODE COMPLIANCE BY: WILLDAN ENGINEERING

Approval of these plans & specifications shall not be construed to be a permit for, or an approval of any violation of any Federal, State, County or City laws or ordinances. One set of approved plans must be kept on the job until completion.

9:28:06 AM Jul 21, 2025

FLEWELLING & MOODY
architecture planning interiors

HEADQUARTERS OFFICE:
99 S. Lake Avenue, Suite 300
Pasadena, CA 91101
Phone: 323.543.8300
E-Mail: fm-pasadena@flewelling-moody.com

ANTELOPE VALLEY OFFICE:
1035 West Lancaster Boulevard
Lancaster, California 93534
Phone: 661.949.0771
E-Mail: fm-lancaster@flewelling-moody.com

An Employee Owned Corporation

ARCHITECT

CONSULTANT

Budlong
An MBE|SBE|DBE|LSBE Firm
Glendale|Downtown LA|Fremont|Camarillo
W W W . B U D L O N G . C O M
Job No. 23-140

REGISTERED PROFESSIONAL ENGINEER CONTI. PATEL No. 29448 EXP. 06-30-25 MECHANICAL CALIFORNIA

Drawn by: Author

Check by: Checker

Revisions

No.	Date	Description
	01/26/24	100% DD
	03/01/24	50% CD
	05/09/24	90% CD
	08/05/24	100% CD
	11/25/24	100% CD V2
	01/31/25	100% CD V3

All dimensions must be checked at the job by the contractor who accepts full responsibility for their accuracy under the contract. These plans & the specifications in connection therewith have been prepared for a specific site. Any and all responsibility for their use in whole or in part on any other site is hereby disclaimed by Flewelling & Moody.

CITY OF RIDGECREST

SGT. JOHN PINNEY MEMORIAL POOL REPLACEMENT

205 S WARNER ST, RIDGECREST, CA 93555

Drawing Title

PLUMBING DETAILS

Job No. 3055-0100

Date 05/09/2025

Sheet No. P6.02

GENERAL NOTES

1. ALL TELECOMMUNICATIONS WORK SHALL COMPLY WITH THE LATEST EDITION OF THE OWNER TELECOMMUNICATIONS INFRASTRUCTURE STANDARDS AND CURRENT MANUFACTURER AND BICSI INSTALLATION PRACTICES. THESE STANDARDS HAVE BEEN ESTABLISHED TO EXCEED ALL CURRENT CODE AND BICSI INSTALLATION PRACTICE. ANY ITEMS THAT RAISE QUESTION SHALL BE BROUGHT TO THE ATTENTION OF THE CONSTRUCTION MANAGER AND OWNER REPRESENTATIVE IN WRITING. IT IS ALWAYS A BEST PRACTICE TO PROVIDE THE AHJ WITH DETAIL ON ANY AND ALL CONSTRUCTION ITEMS THAT COULD BE QUESTIONED BY THE AHJ. THE PROJECT DOCUMENTATION PACKAGE AND ASSOCIATED OWNER STANDARD ARE NOT TO BE INTERPRETED NOR CONSIDERED AS AUTHORIZATION TO DEVIATE FROM ANY CODE OR REGULATION. IT IS THE CONTRACTOR'S RESPONSIBILITY TO VALIDATE THAT THESE REQUIREMENTS WILL MEET THE EQUIPMENT MANUFACTURER'S REQUIREMENT TO PROVIDE THE OWNER WITH A MINIMUM 25-YEAR SCS EXTENDED MATERIALS WARRANTIES.

2. IN THE EVENT OF A CONFLICT OR INCONSISTENCY BETWEEN ITEMS INDICATED ON THE PLANS AND/OR SPECIFICATIONS, THE DOCUMENT WHICH PRESCRIBES AND ESTABLISHES THE COMPLETE JOB AS PER MANUFACTURER OR THE HIGHER STANDARD SHALL PREVAIL. ALL SUCH DISCREPANCIES ARE TO BE BROUGHT TO THE ATTENTION OF THE CONSTRUCTION MANAGER AND THE OWNER REPRESENTATIVE IN WRITING IMMEDIATELY UPON DISCOVERY.

3. OMISSIONS FROM THE DRAWINGS OR FROM THE SPECIFICATIONS OR THE MIS-DESCRIPTION OF DETAILS OF WORK WHICH ARE CLEAR AND NECESSARY TO CARRY OUT THE INTENT FOR THE DRAWINGS AND SPECIFICATIONS, OR WHICH ARE CUSTOMARILY PERFORMED SHALL NOT RELIEVE THE CONTRACTOR FROM PERFORMING SUCH OMITTED OR MIS-DESCRIBED DETAILS OF THE WORK. THE CONTRACTOR SHALL NOTIFY THE CONSTRUCTION MANAGER AND OWNER REPRESENTATIVE UPON IDENTIFICATION OF SUCH OMISSIONS, MIS-DESCRIPTION, AND UNCLEAR DIRECTIONS IMMEDIATELY. THE CONTRACTOR SHALL PERFORM ALL PROJECT TASKS AND ASSEMBLY BUILDS AS PER BICSI STANDARDS AND MANUFACTURER'S REQUIREMENTS ALONG WITH COORDINATING AND WORKING WITH THE OWNER TO CORRECT SUCH DOCUMENTATION ERRORS.

4. THE CONTRACTOR SHALL CHECK ALL DRAWINGS FURNISHED IMMEDIATELY UPON THEIR RECEIPT AND PROMPTLY NOTIFY THE OWNER OF ANY DISCREPANCIES. THIS INCLUDES BUT NOT LIMITED TO, DISCREPANCIES BETWEEN DRAWINGS AND SPECIFICATIONS, OR DRAWINGS AND MANUFACTURER INSTALLATION INSTRUCTIONS THAT WILL CAUSE EXTENDED WARRANTY ISSUES, OR DRAWINGS AND GOVERNING CODES AND BEST PRACTICES. THE CONTRACTOR SHALL BRING TO THE ATTENTION OF THE CONSTRUCTION MANAGER AND OWNER REPRESENTATIVE ANY DISCREPANCIES BETWEEN DRAWINGS AND HOW THE CONTRACTOR NORMALLY DELIVERS THE SERVICES DESCRIBED IN THE DRAWINGS OR SPECIFICATIONS.

5. ALL MATERIALS AND EQUIPMENT FURNISHED AND INSTALLED SHALL BE NEW AND FREE FROM ANY KNOWN DEFECT. ALL EQUIPMENT SHALL BEAR THE UNDERWRITERS LABORATORIES LABEL (UL™) LISTING, CLASSIFIED, AND/OR PERFORMANCE VERIFIED MARK OR FROM A OWNER APPROVED ALTERNATIVE TESTING ORGANIZATION. ALL MATERIALS SHALL BE INSTALLED AND USED IN THE MANNER FOR WHICH THE MANUFACTURER INTEND THEM FOR. THIS APPLIES FOR BOTH PIECE PARTS AND COMPLETE FUNCTIONING ASSEMBLIES.

6. CONTRACTOR IS REQUIRED TO RECEIVE WRITTEN APPROVAL FOR ALL RECOMMENDED AND REQUIRED WORK DEVIATIONS AND CLARIFICATIONS TO THE PLANS AND SPECIFICATIONS OF THIS PROJECT BY THE OWNER AND ITS REPRESENTATIVES PRIOR TO ANY FIELD ACTIVITY.

7. ALL WORK MUST BE COMPLETED IN AS PER MANUFACTURER INSTALLATION REQUIREMENTS AND BICSI INSTALLATION PRACTICES. THE OWNER DEMANDS THE UTMOST PROFESSIONALISM WHEN WORK IS BEING PERFORMED AT EITHER OWNER CAMPUS AND HOLDS ALL CONTRACTORS TO THAT LEVEL OF PROFESSIONALISM. THE WORK SITE SHALL BE KEPT CLEAN AND FREE FROM DEBRIS. IT IS EVERY CONTRACTOR AND ALL THEIR REPRESENTATIVE'S RESPONSIBILITY TO GUARD AGAINST ANY DAMAGE TO OWNER PROPERTY AND THE IMMEDIATE REPAIR IF ANY DAMAGE IS CAUSED. THE CONTRACTOR SHALL BE RESPONSIBLE FOR CONDUCTING A FINAL CLEANUP OF THE WORK SITE PRIOR TO FINAL SYSTEM ACCEPTANCE AS PART OF THE PUNCH-LIST PROCESS.

8. THE CONTRACTOR SHALL NOT BORE, NOTCH, OR IN ANY WAY CUT INTO ANY STRUCTURAL MEMBER WITHOUT WRITTEN APPROVAL FROM THE OWNER, ARCHITECT, AND STRUCTURAL ENGINEER. WITH PERMISSION FROM THE ABOVE AND PRIOR TO ALL CUTTING, DRILLING, NOTCHING, CORING, ETC. OF CONCRETE STRUCTURE AND FACADE THESE SURFACES SHALL BE X-RAY OR GROUND PENETRATING RADAR USED TO ACCURATELY LOCATE REBAR, POST-TENSION CABLES & RODS, CONDUITS, AND ANY OTHER EMBEDDED POTENTIAL OBSTRUCTIONS TO ENSURE THAT NO DAMAGE IS CAUSED TO ANY STRUCTURAL REINFORCEMENTS.

9. FOR THE PURPOSE OF CLEARNESS AND LEGIBILITY THE TELECOM DRAWINGS ARE ESSENTIALLY DIAGRAMMATIC. THE SIZE AND LOCATION OF EQUIPMENT IS SHOWN TO SCALE WHEREVER POSSIBLE. THE CONTRACTOR SHALL VERIFY ALL FIELD CONDITIONS WITH INFORMATION INDICATED ON THE DRAWINGS AND DESCRIBED IN THE SPECIFICATION SECTIONS WHERE TELECOM WORK INTERFACES WITH OTHER TRADES.

10. THE CONTRACTOR SHALL TAKE SPECIAL PRECAUTIONS WHEN WORKING IN AREAS WITH EXISTING CEILINGS AND SHALL BE RESPONSIBLE FOR REMOVAL AND REPLACEMENT OF CEILING TILES WITHOUT DAMAGING OR SOILING THE CEILING TILES. CHIPPED, DAMAGED, CRACKED, OR BROKEN TILES ARE THE CONTRACTOR'S RESPONSIBILITY TO REPLACE WITH LIKE TILES.

11. ALL FOOTAGES IDENTIFIED ON DRAWINGS OR SCALED OFF OF DRAWINGS ARE TO BE CONSIDERED ESTIMATES AND ARE REQUIRED TO BE FIELD VERIFIED BY CONTRACTOR PRIOR TO ORDERING OF MATERIAL.

12. ALL CABLE TRAYS, LADDER (TYPE) RACKING, "BASKET TYPE TRAY, CONDUIT & SLEEVES, EQUIPMENT RACKS, PROTECTION PANELS, AND CABLE SHEATHS SHALL BE BONDED TO AN APPROVED TELECOMMUNICATIONS BONDING ASSEMBLY.

13. AS A STANDARD, ALL INTRA-BUILDING PATHWAYS SHALL HAVE A MINIMUM OF 25% AVAILABLE CAPACITY AT THE SCHEDULED END OF THE PROJECT. SHOULD THIS PERCENTAGE NOT BE ACHIEVABLE, THIS ISSUE MUST BE BROUGHT TO THE ATTENTION OF THE CONSTRUCTION MANAGER AND THE OWNER REPRESENTATIVE.

14. ACCORDING TO TIA STANDARDS AND BICSI METHODOLOGIES PULL-BOXES LOCATED WITHIN A STRUCTURE ARE TO BE PLACED AT 100' INCREMENTS AND PROPERLY SPACED WITHIN RUNS OF MORE THAN 150'. PULL-BOXES ARE TO BE PLACED IN CONDUIT RUNS THAT EXCEED A MAXIMUM OF 180-DEGREES IN CHANGES OF DIRECTION. TELECOMMUNICATIONS PULL-BOXES ARE TO BE SIZED AT A MINIMUM OF TWELVE (12) TIMES THE DIAMETER OF THE LARGEST CONDUIT. PULL-BOXES SHOULD NOT BE USED FOR CHANGES OF DIRECTION. THESE STANDARDS ARE TO BE ADHERED TO WHERE EVER PRACTICAL AND ANY DEVIATION TO THESE STANDARDS REQUIRES A SHOP-DRAWING, IF DISCOVERED DURING THE SUBMITTAL PHASE, TO EMENDATE THE ISSUE OR BY AN RFI DURING THE CONSTRUCTION INSTALLATION PHASE. THE OWNER MAY ELECT TO INCREASE THE CONDUIT SIZE OR QUANTITY OF CONDUITS TO MITIGATE THE ISSUE FOR THE EXCESS LENGTH, ADDITIONAL QUANTITY OF CHANGES OF DIRECTION, AND/OR THE REDUCED SIZE OF PULL-BOXES WITHIN THE GIVEN PATHWAY. THE CONTRACTOR IS REQUIRED TO HAVE APPROVAL IN WRITING PRIOR TO ANY ROUGH-IN WORK OR MATERIAL PROCUREMENT.

15. USE "J"HOOKS FOR STATION CABLE DISTRIBUTION IN OPEN CEILING ENVIRONMENTS IS ACCEPTABLE TO THE OWNER AS LONG AS THE FOLLOWING PARAMETERS ARE MET. DO NOT USE CEILING SUPPORT WIRE OR CEILING HANGERS. DO NOT USE SUPPORTS FOR ANY OTHER BUILDING SERVICES UNLESS PRIOR WRITTEN APPROVAL FOR THEIR USE IS GIVEN AND VERIFIED WITH PROJECT STRUCTURAL ENGINEER. NEVER IS IT ACCEPTABLE FOR CABLING TO IMPEDE OR HINDER THE ACCESSING OF THE ABOVE CEILING SPACE OR ANY ABOVE CEILING MOUNTED EQUIPMENT. CABLES ARE NOT TO BE WRAPPED AROUND ANY BUILDING STRUCTURAL SUPPORTS OR BUILDING SERVICES. ALL APPROPRIATE OWNER AND BICSI INSTALLATION PRACTICE CLEARANCES FROM FIXTURES, CONTROLS, AND ACCESS DEVICES OF ANY KIND ARE TO BE ADHERED TO. CABLING IS NEVER TO RUN THROUGH OR IMPEDE THE OPERATION OF ANY AIR-HANDLING DUCTS OR DAMPERS.

16. WHERE PATHWAY CONSISTS OF MULTIPLE CONDUITS OR SLEEVES, A PATHWAY MUST BE FILLED TO CURRENT TIA AND BICSI INSTALLATION RECOGNIZED MAXIMUM FILL BEFORE UTILIZING THE NEXT VACANT OR PARTIALLY FILLED PATHWAY.

17. OVERHEAD AND WALL MOUNTED LADDER (TYPE) RACKING INSTALLATION SHALL MATCH THE DRAWINGS AS CLOSELY AS POSSIBLE AND REQUIRES A SHOP DRAWING FOR EACH ROOM LOCATION. THE PACKAGE IS TO INCLUDE A BILL OF MATERIALS WITH PART NUMBERS FROM RACKING MANUFACTURER FOR MOUNTING AND CONNECTION PIECE PARTS. PRIOR TO ANY ROUGH-IN WORK BEING PERFORMED THESE SUBMITTALS MUST BE APPROVED BY THE OWNER REPRESENTATIVE.

18. ALL CABLING AND THEIR PATHWAYS PASSING THROUGH A RATED FIRE OR SMOKE BARRIER MUST BE PROPERLY SLEEVED AND FIRE STOPPED USING APPROVED (UL CLASSIFIED) FIRE STOP ASSEMBLIES. FIRE-STOP ASSEMBLIES ARE TO BE INSTALLED PER THE MANUFACTURER'S INSTRUCTIONS FOR THE TYPE OF BARRIER, PATHWAY SIZE, AND QUANTITY OF CABLES THE FIRE-STOP ASSEMBLY IS BEING INSTALLED FOR. CONTRACTOR IS REQUIRED TO MAINTAIN TRAINING RECORDS FOR ALL STAFF PERFORMING FIRE-STOP ASSEMBLY INSTALLATION WORK.

19. CABLE PULLING -LINE/ROPE/TAPE SHALL BE PLACED IN ALL NEW CONDUITS. ALL UNUSED CONDUITS SHALL ALSO BE CAPPED AND/OR PROPERLY FIRE STOPPED IN A MANNER APPROVED BY THE OWNER AND/OR THE AHJ.

20. CONTRACTOR TO COORDINATE WAO AND SUPPORTING CONDUIT WITH THE ELECTRICAL CONTRACTOR WHERE THE ELECTRICAL CONTRACTOR IS A DIFFERENT ORGANIZATION THAN LOW-VOLTAGE CABLING/CONDUIT CONTRACTOR FOR PROPER PLACEMENT.

21. ALL STATION CABLES SHALL BE NEATLY DRESSED AND SECURED FEET AT A MINIMUM EVERY FOUR (4) FEET.

22. ALL STATION CABLES SHALL BE TERMINATED ON THE SAME FLOOR AS THE FLOOR SERVING BDF/IDF UNLESS OTHERWISE NOTED IN THESE DRAWINGS.

23. ALL STATION CABLING IS TO BE MECHANICALLY PROTECTED IN PLACE UNLESS OTHERWISE IDENTIFIED IN THESE DRAWINGS, BY A CONTRACT CHANGE RECORD, OR BY A RFI RESPONSE FROM THE OWNER REPRESENTATIVE IN WRITING DIRECTING SURFACE-MOUNT EXPOSED AS THE CABLE INSTALLATION MEANS.

24. ALL NEW AND REUSED STATION CABLES SHALL BE TESTED AND DOCUMENTED USING RECOGNIZED MANUFACTURER INSTALLATION REQUIREMENTS AND BICSI INSTALLATION PRACTICES. UTP (CATEGORY) CABLE TESTING RESULTS SHALL BE ONE TEST RECORD FOR EACH CABLE AND THE RECORD MUST INCLUDE THE OWNER'S APPROVED CABLE IDENTIFICATION STANDARD NAMING/NUMBERING SCHEME. OPTICAL FIBER TESTING SHALL FOLLOW ALL OWNER AND MANUFACTURER INSTALLATION PRACTICES. COAX TESTING SHALL FOLLOW BOTH UNIVERSITY AND THE ANSI/SCTE CABLE TESTING STANDARDS & BEST PRACTICES, INCLUDING BUT NOT LIMITED TO; ANSI/SCTE -10-2014, 40-2011, 44-2010, 47-2007, 48-3-2011.

25. THE OWNER REQUIRES A ONE (1) METER SLACK LOOP FOR ALL WAO SUPPORTED BY OPEN CEILING CABLE DISTRIBUTION. THE SLACK LOOP MUST BE SUPPORTED ABOVE THE WAO IN NEAT AND REPEATABLE FASHION THAT MEETS BOTH BICSI INSTALLATION AND MANUFACTURER PRACTICES.

26. ALL STATION OUTLETS, WAO, AND TERMINATION POINTS INCLUDING EXISTING WAO UTILIZED UNDER THIS PROJECT SCOPE SHALL BE PROPERLY LABELED AND IDENTIFIED USING THE STANDARD OWNER INTERNAL DISTRIBUTION NAMING/NUMBERING SCHEME, IDENTIFIED IN THIS DRAWING SET. ALL LABELS ARE TO BE MACHINE GENERATED AND AN EXCEL TYPE MATRIX CREATED DEFINING LOCATION OF BOTH ENDS OF EACH LABELED CABLE. AS-BUILT CLOSEOUT PACKAGE MUST INCLUDE THESE STATION AND TERMINATION POINTS IDENTIFIED ON FLOOR PLANS FOR EACH LEVEL/FLOOR IN ADDITION TO THE STATION CABLING MATRIX. THE SAME CABLE IDENTIFICATION IS ALSO REQUIRED TO BE INCLUDED ON EACH CABLE TESTED RECORD BOTH HARD AND SOFT-COPY RECORD.

27. INCLUDED AS PART OF THE CABLING AS-BUILT DOCUMENTATION PACKAGE, IT IS THE CONTRACTOR'S RESPONSIBILITY TO PROVIDE TO THE OWNER THE ADD ON TO THE CURRENT STRUCTURED CABLING SOLUTION MANUFACTURER'S 25-YEAR EXTENDED WARRANTY CERTIFICATE FOR THIS PROJECT.

28. THE WAO UTP 8-CONDUCTOR JACKS ARE DESCRIBED WITHIN THIS DOCUMENT SET AS RJ-45 JACKS/INSERTS. THE DESIGNERS ARE AWARE THAT ABBREVIATION RJ-45 IS A FCC - REGISTERED JACK WITH 8-CONDUCTORS AND DESCRIPTION IN THIS DOCUMENT SET IS FOR A UTP CATEGORY CABLE RATED JACK/INSERT AND NOT FOR FCC INTERFACE JACKS.

29. NOT ALL SYMBOLS AND ABBREVIATIONS SHOWN ON THIS SHEET ARE USED IN THE DRAWING SET CURRENTLY, BUT ARE THERE, SHOULD THE SCOPE GROW TO INCLUDE SUCH WORK.

30. THE CONTRACTOR SHALL PROVIDE WIRE GUARDS FOR ALL EXPOSED AUDIO, VISUAL, AND NETWORK DEVICES LOCATED IN AREAS THAT CAN BE SUBJECT TO VANDALISM. FOR CLARIFICATION THE CONTRACTOR SHALL DISCUSS WITH CONSTRUCTION MANAGER.

31. ALL CONDUITS CROSSING BUILDING SEISMIC SEPARATIONS OR EXPANSION JOINTS SHALL BE PROVIDED WITH APPROVED CONNECTORS. REFER TO ARCHITECTURAL PLANS FOR ALL EXPANSION JOINT LOCATIONS.

32. COORDINATE INSTALLATION OF LIGHTING FIXTURES WITH CABLE TRAY AND EQUIPMENT IN BDF, IDF AND ALL A/V ROOMS/SPACES TO MAINTAIN REQUIRED LIGHTING LEVELS WITH ALL EQUIPMENT IN PLACE.

33. FOR THOSE ELEMENTS THAT DO NOT REQUIRE DETAILS OR SHOP DRAWINGS ON THE APPROVED DRAWINGS, THE INSTALLATION SHALL BE SUBJECT TO THE APPROVAL OF THE ELECTRICAL ENGINEER AND THE FIELD REPRESENTATIVE FOR THE OWNER.

34. OWNER STANDARDS, MANUFACTURER, BICSI INSTALLATION PRACTICES FOR PROJECT SUBMITTALS AND SHOP DRAWINGS ARE IDENTIFIED IN SPECIFICATIONS SECTIONS LISTED IN DIVISION 26, 27, AND 28, OF THE PROJECT CONTRACT DOCUMENTATION SET.

35. CONTRACTOR SHALL BE RESPONSIBLE TO PROVIDE PROPER CABLING INSTALLATION METHODS WITH CABLING TO BE DRESSED AND SECURED AT A MINIMUM OF EVERY (4) FOUR FEET.

ABBREVIATIONS

#	NUMBER (IDENTIFICATION) OR COUNT
#	NUMBER IS QUANTITY
0dBm	STANDARD-LEVEL RATIO OF MEASUREMENT THAT REPRESENTS A ZERO-DECIBEL READING FROM ONE MILLIWATT OF POWER
A/E	ARCHITECT/ENGINEER
AFF	ABOVE FINISHED FLOOR
AHJ	AUTHORITY HAVING JURISDICTION
ANSI	AMERICAN NATIONAL STANDARD INSTITUTE
AP	ACCESS POINT
ARCH	ARCHITECT, ARCHITECTURAL
AWG	AMERICAN WIRE GAUGE
BICSI	BUILDING INDUSTRY CONSULTING SERVICES
BOND	BONDING (MECHANICAL CONNECTION TO POWER GROUND)
C.	CONDUIT
C.O.	CONDUIT ONLY – WITH PULL STRING
CATV	COMMUNITY ANTENNA TELEVISION (CABLE TELEVISION)
CCTV	CLOSED CIRCUIT TELEVISION
CEC	CALIFORNIA ELECTRICAL CODE
CKT	CIRCUIT
CLG	CEILING
CMP	COMMUNICATIONS PLENUM (CABLE JACKET RATING)
CP	CONSOLIDATION POINT
CSI	CONSTRUCTION SPECIFICATION INSTITUTE
CT	CABLE TRAY
DB	DIRECT-BURIED OR DUCT BANK
DB	DECIBEL
DIST	DISTRIBUTION
DWG	DRAWING
EA	EACH
EF	ENTRANCE FACILITY
ELECT	ELECTRICAL
EMT	ELECTRICAL METALLIC TUBING
EOLR	END OF LINE RESISTOR
EXIST/(E)	EXISTING
FIN	FINISH
FLR	FLOOR
FT	FEET
GA	GAUGE
GND	GROUND (MECHANICAL CONNECTION TOEARTH)
IBP	INTERBUILDING PATHWAYS
ID	INSIDE DIAMETER OR INSIDE DIMENSION
IDC	INSULATION DISPLACEMENT CONDUCTOR
IDF	INTERMEDIATE DISTRIBUTION FRAME
IEEE	INSTITUTE OF ELECTRICAL AND ELECTRONIC ENGINEERS
IR	INFRARED
ISO	INTERNATIONAL ORGANIZATION OF STANDARDIZATION
ISP	INTERNET SERVICE PROVIDER JB JUNCTION BOX
JC	JOINT COMMISSION: ACCREDITATION, HEALTH CARE CERTIFICATION (FORMALLY KNOWN AS JCCO)
MAC	MEDIA ACCESS CONTROL
MAX.	MAXIMUM
MDF	MAIN DISTRIBUTION FRAME
MH	MAINTENANCE HOLE (OSP CONFINED SPACE – (A.K.A. MANHOLE)
MIN.	MINIMUM
MTG	MOUNTING
N	NORTH
OD	OUTSIDE DIAMETER
OF	OPTICAL FIBER
OSP	OUTSIDE PLANT
PA	PUBLIC ADDRESS SYSTEM
PB	PULL BOX
PWR	POWER
RM	ROOM
S	SOUTH
SCS	STRUCTURED CABLING SOLUTION
SCTP	SCREENED TWISTED PAIR
SW	SWITCH
TB	TERMINAL BLOCK
TBB	TELECOMMUNICATIONS BONDING BACKBONE
TE	TELECOMMUNICATIONS ENCLOSURE
TEL	TELEPHONE
TV	TELEVISION
TYP	TYPICAL
UG	UNDERGROUND
UPS	UNINTERRUPTIBLE POWER SUPPLY
W/	WITH
W/O	WITHOUT
WAO	WORK AREA OUTLET / WORK STATION OUTLET
WIFI	WIRELESS FIDELITY (LOCALIZED WIRELESS
USER	ACCESS INTERNET/NETWORK)
WP	WATERPROOF OUTLET BOX

INTRUSION DETECTION SYSTEM

- SECURITY SYSTEM MAGNETIC DOOR SWITCH PER SPECIFICATION.
- SECIP — INTRUSION PANEL PER SPECIFICATION, WALL MOUNTED, HEIGHT AS INDICATED
- C S — GLASS BREAK SENSOR
- C M — MOTION DETECTOR
- KP — INTRUSION KEYPAD
- INTRUSION SIREN

CLOSED CIRCUIT TELEVISION (CCTV)

- C — CEILING MOUNTED DOME CCTV CAMERA FOR SECURITY SURVEILLANCE. PROVIDE PER PLANS AND SPECIFICATION AS REQUIRED.
- WALL/POLE MOUNTED DOME CCTV CAMERA FOR SECURITY SURVEILLANCE. MOUNTING HEIGHT SHALL BE PER PLANS AND/OR AS APPROVED BY RIDGECREST IT DEPT. PROVIDE PER PLANS AND SPECIFICATION AS REQUIRED.

SCOPE OF WORK

PROJECT WILL PROVIDE COMPLETE TELECOM SYSTEM AND CONNECTIONS INCLUDING VOICE/DATA CABLING AND CONNECTIONS FOR A COMPLETE WORKING SYSTEM.

PROJECT WILL PROVIDE COMPLETE INTRUSION SYSTEM INCLUDING GLASS BREAK PROTECTION, MOTION DETECTION AND KEY PAD AS REQUIRED FOR A COMPLETE WORKING SYSTEM.

PROJECT WILL PROVIDE COMPLETE IP-CCTV SYSTEM AS REQUIRED PER LATEST RIDGECREST I.T. REQUIREMENTS.

CONTRACTOR TO PROVIDE FULLY FUNCTIONAL AV SYSTEM PER PLANS SHEET LV5.04 WITH COMPLETE CONNECTIONS, CABLING AND TERMINATIONS TO AV HEAD END. REFER TO SHEET LV5.04 FOR COMPLETE DETAILS OF INSTALLATION.

COMPUTER NETWORKING/TELEPHONE SYSTEM

- DATA OUTLET, 4S BOX WITH 1 GANG RING AND FACE PLATE FLUSH IN WALL @+18" A.F.F. (U.N.O.), PROVIDE 1" EMT FROM BOX TO CABLE TRAY OR IDF/MDF ROOM. WHERE J-HOOKS ARE USED RUN CONDUIT TO UP TO 6" ABOVE CEILING SPACE OR TO ACCESSIBLE CEILING SPACE. REFER TO PROJECT NOTES. ALIGN WITH ELECTRICAL BOX WHERE ELECTRICAL IS ADJACENT. OUTLETS TO HAVE MIN 1 CAT6A CABLE (U.O.N)
- DATA OUTLET, FLUSH FLOOR MOUNTED. (BY OTHERS)
- TELEPHONE OUTLET, FLUSH IN WALL @+48" A.F.F. (U.N.O.). 4S BOX WITH 2 GANG RING AND FACE PLATE PROVIDE 1" EMT FROM BOX TO CABLE TRAY OR IDF/MDF ROOM. WHERE J-HOOKS ARE USED RUN CONDUIT TO UP TO 6" ABOVE CEILING SPACE OR TO ACCESSIBLE CEILING SPACE. REFER TO PROJECT NOTES.
- COMBINATION VOICE/DATA OUTLET. 4S BOX WITH 2 GANG RING AND FACE PLATE. ENGRAVE FACE PLATE "VOICE" AND "DATA" OVER RESPECTIVE JACKS. VERIFY TYPE OF JACK WITH SYSTEM SUPPLIER, FLUSH IN WALL @+18" A.F.F. (U.N.O.), PROVIDE 1" EMT FROM BOX TO MDF/MDF ROOM. WHERE J-HOOKS ARE USED RUN CONDUIT TO UP TO 6" ABOVE CEILING SPACE OR TO ACCESSIBLE CEILING SPACE. REFER TO PROJECT NOTES. ALIGN WITH ELECTRICAL BOX WHERE ELECTRICAL IS ADJACENT.OUTLETS TO HAVE MIN 1 CAT6A CABLE (U.O.N)
- WAP — WIRELESS NETWORK ACCESS POINT CEILING MOUNTED
- WAP — WIRELESS NETWORK ACCESS POINT WALL MOUNTED
- TV — TV OUTLET
- XXX MDF/IDF — MAIN OR INTERMEDIATE DISTRIBUTION FRAME PER SPECIFICATION AND/OR FLOOR PLANS.
- CABLE TRAY AND/OR LADDER RACK PER SPECIFICATIONS AND/OR FLOOR PLANS AS REQUIRED.
- TELEPHONE TERMINAL BACKBOARD PER ANSI/TIA 596A AS SHOWN ON PLANS. FIRE TREATED "TTB". PROVIDE 3/4" INCH GRADE AC SANDED AND PAINTED CPX PLYWOOD, 4' X 8' UNLESS NOTED OTHERWISE. FIRE RATED LABEL MUST NOT BE PAINTED OVER. WHERE LABEL IS ON WALL SIDE, CONTRACTOR MUST OBTAIN WRITTEN APPROVAL FROM AHJ PRIOR TO INSTALLATION.
- CONDUIT RUN, CONCEALED IN CEILING, WALLS OR UNDER FLOORS
- CONDUIT STUB OUT.
- CONDUIT UP
- CONDUIT DOWN
- CONDUIT SLEEVE
- T — TELEPHONE CONDUIT RUN "T" INDICATES 3/4 INCH CONDUIT ONLY, "T1" INDICATES 1 INCH CONDUIT ONLY, "T2" INDICATES 1- 1/4 INCH CONDUIT ONLY.
- D — DATA SYSTEM CONDUIT RUN. D; 1" CONDUIT, D1; 1 1/4" CONDUIT, D2;1 1/2" CONDUIT.
- LVTC — LOW VOLTAGE TERMINAL CABINET PER SPECIFICATION, WALL MOUNTED, HEIGHT AS INDICATED
- SP — POLE MOUNTED SPEAKERS - JBL AWC-82
- AV — AV JUNCTION BOXES. PROVIDE (2) AT RECOMMENDED LOCATION (1) FOR SCOREBOARD AND (1) ADDITIONAL INPUT CONNECTIONS. SEE SHEET LV5.04
- MIC — PROVIDE MICROPHONE AND CONNECTIONS TO AV SYSTEM FOR ALLOWING STAFF TO MAKE ANNOUNCEMENTS.

APPLICABLE CODES AND STANDARDS

LIST OF 2022 CALIFORNIA CODE OF REGULATIONS

APPLICABLE CODES :

1. 2022 BUILDING STANDARDS ADMINISTRATIVE CODE, PART 1, TITLE 24 C.C.R.
2. 2022 CALIFORNIA BUILDING CODE (CBC), PART 2, TITLE 24 C.C.R.
3. 2022 CALIFORNIA ELECTRICAL CODE (CEC), PART 3, TITLE 24 C.C.R.
4. 2022 CALIFORNIA ENERGY CODE (CEC), PART 6 TITLE 24 C.C.R.
5. 2022 CALIFORNIA FIRE CODE, PART 9, TITLE 24 C.C.R
6. 2022 CALIFORNIA REFERENCED STANDARDS, PART 12, TITLE 24 C.C.R. TITLE 19 C.C.R
7. PUBLIC SAFETY, STATE FIRE MARSHAL REGULATIONS

LOW VOLTAGE SHEET INDEX

SHEET NUMBER	SHEET NAME
LV0.01	LOW VOLTAGE FRONT SHEET
LV1.01	LOW VOLTAGE SITE PLAN
LV1.01A6	LOW VOLTAGE SITE PLAN ALT 6
LV1.01A7	LOW VOLTAGE SITE PLAN ALT 7
LV2.01	LOW VOLTAGE COMMUNITY BUILDING FLOOR PLAN
LV2.01A6	LOW VOLTAGE COMMUNITY BUILDING FLOOR PLAN ALT 6
LV2.01A7	LOW VOLTAGE COMMUNITY BUILDING FLOOR PLAN ALT 7
LV2.02	LOW VOLTAGE EQUIPMENT STORAGE FLOOR PLAN
LV2.02A6	LOW VOLTAGE EQUIPMENT STORAGE FLOOR PLAN ALT 6
LV5.01	LOW VOLTAGE RACK ELEVATION DETAILS
LV5.02	LOW VOLTAGE DETAILS
LV5.03	LOW VOLTAGE DETAILS
LV5.04	LOW VOLTAGE DETAILS

AGENCY

FLEWELLING & MOODY
architecture planning interiors

HEADQUARTERS OFFICE:
99 S. Lake Avenue, Suite 300
Pasadena, CA 91101
Phone: 323.543.8300
E-Mail: fm-pasadena@flewelling-moody.com

ANTELOPE VALLEY OFFICE:
1035 West Lancaster Bouldvard
Lancaster, California 93534
Phone: 661.949.0771
E-Mail: fm-lancaster@flewelling-moody.com

An Employee Owned Corporation

ARCHITECT

CONSULTANT

Budlong
An MBE|SBE|DBE|LSBE Firm
Glendale|Downtown LA|Fremont|Camarillo
W W W . B U D L O N G . C O M
Job No. 23-140

REGISTERED PROFESSIONAL ENGINEER — SHAWN N. CHRISTIAN — No. E 22864 — EXP. 06/30/25 — ELECTRICAL — STATE OF CALIFORNIA

Drawn by: Author

Check by: Checker

Revisions

No.	Date	Description
	01/26/24	100% DD
	03/01/24	50% CD
	05/09/24	90% CD
	08/05/24	100% CD
	11/25/24	100% CD V2
	01/31/25	100% CD V3
1	6/9/25	BID ALTERNATE

All dimensions must be checked at the job by the contractor who accepts full responsibility for their accuracy under the contract. These plans & the specifications in connection therewith have been prepared for a specific site. Any and all responsibility for their use in whole or in part on any other site is hereby disclaimed by Flewelling & Moody.

CITY OF RIDGECREST

SGT. JOHN PINNEY MEMORIAL POOL REPLACEMENT

205 S WARNER ST, RIDGECREST, CA 93555

Drawing Title

LOW VOLTAGE FRONT SHEET

Job No. 3055-0000

Sheet No. **LV0.01**

Date 08/07/2024

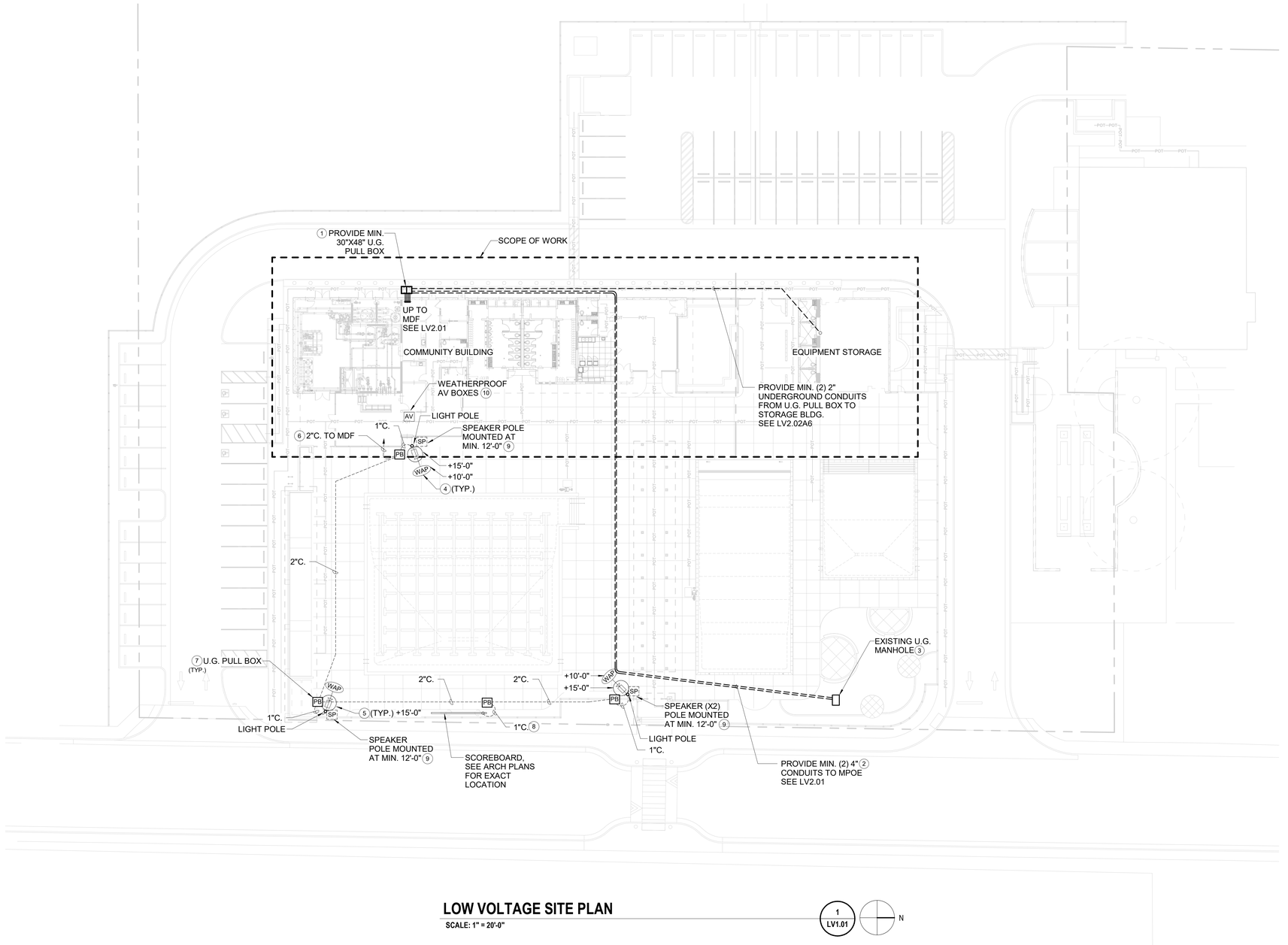

LOW VOLTAGE SITE PLAN

SCALE: 1" = 20'-0"

1 / LV1.01

N

GENERAL NOTES

1. ALL UNDERGROUND CONDUITS SHALL BE INSTALLED AT MINIMUM 24" BELOW FINISHED GRADE UNLESS NOTED OTHERWISE. ALL UTILITY UNDERGROUND CONDUITS SHALL BE INSTALLED PER SERVING UTILITY COMPANY STANDARDS AND DIRECTIONS.
2. ALL UNDERGROUND CONDUITS SHALL BE PVC SCHEDULE-80 AND MINIMUM OF 4" UNLESS NOTED OTHERWISE.
3. EXTREME CAUTION IN EXCAVATING AND TRENCHING ON THIS SITE TO AVOID EXISTING DUCTS, PIPING OR CONDUITS, ETC., AND TO PREVENT HAZARD TO PERSONNEL AND/OR DAMAGE TO EXISTING UNDERGROUND UTILITIES OR STRUCTURES WHETHER OR NOT SHOWN AND INSTALLED BY ANY OTHER CONTRACTS. THE ENGINEER IS NOT RESPONSIBLE FOR THE LOCATION OF UNDERGROUND UTILITIES OR STRUCTURES WHETHER OR NOT SHOWN OR DETAILED AND INSTALLED BY ANY OTHER CONTRACTS. THE CONTRACTOR SHALL IMMEDIATELY NOTIFY THE ENGINEER SHOULD ANY OBSTRUCTIONS OCCUR DURING EXCAVATING AND TRENCHING.
4. PROVIDE THE REQUIRED AUXILIARY MANHOLES OR PULL-BOXES PER CEC 352.26/358.26 TO FACILITATE THE INSTALLATION, THERE SHALL NOT BE MORE THAN THE EQUIVALENT OF FOUR QUARTER BENDS(360 DEGREES TOTAL) BETWEEN PULL POINTS FOR EXAMPLE, CONDUIT BODIES AND BOXES.
5. CONTRACTOR IS REQUIRED TO SIZE THE ENCLOSURES PER CEC 314. SIZES SHOWN ON THE PLANS ARE FOR REFERENCE ONLY. CONTRACTOR TO PROVIDE THE BIGGER OR EQUIVALENT SIZE PULL BOX. THE DEPTH OF THE PULL BOX SHALL HAVE ENOUGH SPACE TO ACCOMMODATE THE LARGEST SIZE CONDUITS AND RELATED LOCKNUTS, BUSHING AND ALL OTHER ACCESSORIES.
6. ALL UNDERGROUND CONDUITS SHALL BE INSTALLED AT MIN. 24" BELOW FINISHED GRADE UNLESS NOTED OTHERWISE. ALL UTILITY UNDERGROUND CONDUITS SHALL BE INSTALLED PER SERVING UTILITY COMPANY STANDARDS AND DIRECTIONS. CONDUITS TO BE ENCASED IN CONCRETE FOR CONDUITS 2" AND ABOVE. SMALLER CONDUITS CAN BE DIRECTLY BURIED WITH NATIVE EARTH MATERIAL. PROVIDE MIN 6" SOIL BEDDING WHERE CONDUITS ARE DIRECTLY BURIED

KEYNOTES

1. PROVIDE NEW UNDERGROUND SERVICE PROVIDER PULL BOX AS REQUIRED FOR SERVICE PROVIDER CONNECTIONS. CONTRACTOR MUST COORDINATE WITH OWNER/SERVICE PROVIDER FOR EXACT LOCATIONS AND CONNECTION REQUIREMENTS PRIOR TO INSTALLATION.
2. PROVIDE NEW UNDERGROUND CONDUITS PER SERVICE PROVIDER REQUIREMENTS. CONTRACTOR MUST PROVIDE PULL ROPES IN CONDUIT, CONTRACTOR TO PROVIDE GROUNDING REQUIRED.
3. INTERCEPT EXISTING CONDUIT AT EXISTING MANHOLE AFTER EXISTING ELECTRICAL CABLE IS REMOVED. CONTRACTOR TO FIELD VERIFY EXACT LOCATION OF EXISTING MANHOLE PRIOR TO START OF WORK.
4. PROVIDE NEW OUTDOOR WIRELESS ACCESS POINT POLE MOUNT. CONTRACTOR TO PROVIDE COMPLETE SYSTEM AS REQUIRED INCLUDING NEW (2) CAT-6 CABLING AND CONNECTIONS TO THE MDF ROOM IN COMMUNITY BUILDING PER SPECIFICATIONS. WHERE CABLING DISTANCES EXCEED THE 100 METER LIMITATION, CONTRACTOR MUST PROVIDE EXTENDER TO MEET REQUIRED CONNECTIVITY.
5. PROVIDE NEW OUTDOOR POLE MOUNT IP CAMERA, CAMERA MUST HAVE 270 DEGREE VIEWING ANGLE. PROVIDE PER PLANS AND SPECIFICATION. CONTRACTOR TO PROVIDE COMPLETE SYSTEM AS REQUIRED INCLUDING CAT-6 CABLING AND CONNECTIONS TO THE CCTV SERVERS AND EQUIPMENT IN MDF ROOM IN COMMUNITY BUILDING PER SPECIFICATIONS. WHERE CABLING DISTANCES EXCEED THE 100 METER LIMITATION, CONTRACTOR MUST PROVIDE EXTENDER TO MEET REQUIRED CONNECTIVITY.
6. PROVIDE NEW MIN. 2" UNDERGROUND CONDUIT AND CONNECTIONS FROM MPOE TO UNDERGROUND PULL BOX THEN EXTEND NEW 2" CONDUIT TO NEXT PULL BOX PER PLANS AS REQUIRED FOR A COMPLETE WORKING SYSTEM. CONTRACTOR SHALL BE RESPONSIBLE FOR COMPLETE CONNECTIONS AND TERMINATION PER PROJECT.
7. PROVIDE NEW MIN. 12" X12" CONCRETE POLYMER PULL BOX (BY ELECTRICAL) AT EACH LIGHT POLE AS SHOWN ON PLANS THEN EXTEND NEW MIN. 1" UP THE POLE TO WIRELESS ACCESS POINT AND CAMERA FOR COMPLETE COMPLETE CONNECTIONS ND TEMINATIONS AS REQUIRED.
8. PROVIDE NEW MIN. 1" FROM NEW U.G. PULLBOX UP TO SCORE BOARD FOR NEW DATA CABLING CONNECTIONS FROM MDF AS REQUIRED. CONTRACTOR TO COORDINATE WITH SCORE BOARD INSTALLATION AS TO QTY OF DATA CABLES REQUIRED. WHERE CABLING DISTANCES EXCEED THE 100 METER LIMITATION, CONTRACTOR MUST PROVIDE EXTENDER TO MEET REQUIRED CONNECTIVITY.
9. PROVIDE NEW AV SPEAKERS WITH CABLING AND CONNECTIONS TO AV SYSTEM HEAD END PER AV SCOPE (SEE SHEET LV5.04/1) CONTRACTOR MUST COORDINATE AND OBTAIN CITY APPROVAL FOR HEIGH AND LOCATION AS PLANS ARE DIAGRAMATIC FOR LOCATIONS.
10. PROVIDE (2) OUTDOOR 2 GANG BOXES WITH (2) CAT 6 CABLING AT EACH AND AV CABLING AND CONNECTIONS PER AV PLANS (SEE SHEET LV5.04) CONTRACOR MUST COORDINATE WITH CITY FOR FINAL LOCATION WITH NO OBSTURCTIONS AS THESE PLANS ARE DIAAGRAMATIC FOR APPROXIMATE PLACEMENT . MOUNT AT 48" A.F.F..

AGENCY

FLEWELLING & MOODY
architecture planning interiors

HEADQUARTERS OFFICE:
99 S. Lake Avenue, Suite 300
Pasadena, CA 91101
Phone: 323.543.8300
E-Mail: fm-pasadena@flewelling-moody.com

ANTELOPE VALLEY OFFICE:
1035 West Lancaster Bouldvard
Lancaster, California 93534
Phone: 661.949.0771
E-Mail: fm-lancaster@flewelling-moody.com

An Employee Owned Corporation

ARCHITECT

CONSULTANT

Budlong
An MBE|SBE|DBE|LSBE Firm
Glendale|Downtown LA|Fremont|Camarillo
W W W . B U D L O N G . C O M
Job No. 23-140

REGISTERED PROFESSIONAL ENGINEER — JAMAN K. CHRISTIAN — No. E 22864 — CIVIL — STATE OF CALIFORNIA

Drawn by: Author

Check by: Checker

Revisions

No.	Date	Description
	01/26/24	100% DD
	03/01/24	50% CD
	05/09/24	90% CD
	08/05/24	100% CD
	11/25/24	100% CD V2
	01/31/25	100% CD V3
1	6/9/25	BID ALTERNATE

All dimensions must be checked at the job by the contractor who accepts full responsibility for their accuracy under the contract. These plans & the specifications in connection therewith have been prepared for a specific site. Any and all responsibility for their use in whole or in part on any other site is hereby disclaimed by Flewelling & Moody.

CITY OF RIDGECREST

SGT. JOHN PINNEY MEMORIAL POOL REPLACEMENT

205 S WARNER ST, RIDGECREST, CA 93555

Drawing Title

LOW VOLTAGE SITE PLAN

Job No. 3055-0000

Date 08/07/2024

Sheet No. **LV1.01**

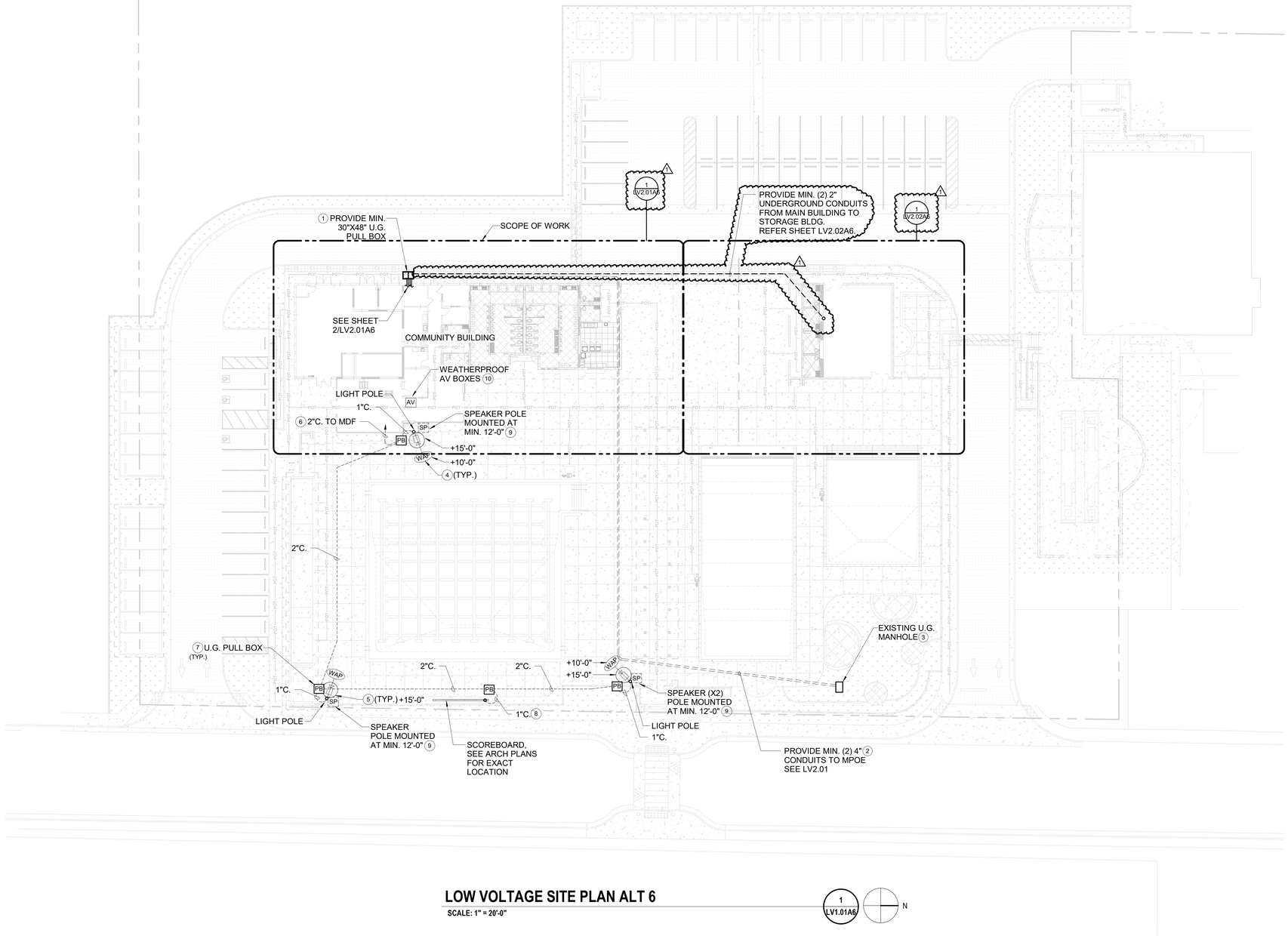

LOW VOLTAGE SITE PLAN ALT 6

SCALE: 1" = 20'-0"

1 LV1.01A6

N

GENERAL NOTES

1. ALL UNDERGROUND CONDUITS SHALL BE INSTALLED AT MINIMUM 24" BELOW FINISHED GRADE UNLESS NOTED OTHERWISE. ALL UTILITY UNDERGROUND CONDUITS SHALL BE INSTALLED PER SERVING UTILITY COMPANY STANDARDS AND DIRECTIONS.
2. ALL UNDERGROUND CONDUITS SHALL BE PVC SCHEDULE-80 AND MINIMUM OF 4" UNLESS NOTED OTHERWISE.
3. EXTREME CAUTION IN EXCAVATING AND TRENCHING ON THIS SITE TO AVOID EXISTING DUCTS, PIPING OR CONDUITS, ETC., AND TO PREVENT HAZARD TO PERSONNEL AND/OR DAMAGE TO EXISTING UNDERGROUND UTILITIES OR STRUCTURES WHETHER OR NOT SHOWN AND INSTALLED BY ANY OTHER CONTRACTS. THE ENGINEER IS NOT RESPONSIBLE FOR THE LOCATION OF UNDERGROUND UTILITIES OR STRUCTURES WHETHER OR NOT SHOWN OR DETAILED AND INSTALLED BY ANY OTHER CONTRACTS. THE CONTRACTOR SHALL IMMEDIATELY NOTIFY THE ENGINEER SHOULD ANY OBSTRUCTIONS OCCUR DURING EXCAVATING AND TRENCHING.
4. PROVIDE THE REQUIRED AUXILIARY MANHOLES OR PULL-BOXES PER CEC 352.26/358.26 TO FACILITATE THE INSTALLATION, THERE SHALL NOT BE MORE THAN THE EQUIVALENT OF FOUR QUARTER BENDS(360 DEGREES TOTAL) BETWEEN PULL POINTS FOR EXAMPLE, CONDUIT BODIES AND BOXES.
5. CONTRACTOR IS REQUIRED TO SIZE THE ENCLOSURES PER CEC 314. SIZES SHOWN ON THE PLANS ARE FOR REFERENCE ONLY. CONTRACTOR TO PROVIDE THE BIGGER OR EQUIVALENT SIZE PULL BOX. THE DEPTH OF THE PULL BOX SHALL HAVE ENOUGH SPACE TO ACCOMMODATE THE LARGEST SIZE CONDUITS AND RELATED LOCKNUTS, BUSHING AND ALL OTHER ACCESSORIES.
6. ALL UNDERGROUND CONDUITS SHALL BE INSTALLED AT MIN. 24" BELOW FINISHED GRADE UNLESS NOTED OTHERWISE. ALL UTILITY UNDERGROUND CONDUITS SHALL BE INSTALLED PER SERVING UTILITY COMPANY STANDARDS AND DIRECTIONS. CONDUITS TO BE ENCASED IN CONCRETE FOR CONDUITS 2" AND ABOVE. SMALLER CONDUITS CAN BE DIRECTLY BURIED WITH NATIVE EARTH MATERIAL. PROVIDE MIN 6" SOIL BEDDING WHERE CONDUITS ARE DIRECTLY BURIED

KEYNOTES

1. PROVIDE NEW UNDERGROUND SERVICE PROVIDER PULL BOX AS REQUIRED FOR SERVICE PROVIDER CONNECTIONS. CONTRACTOR MUST COORDINATE WITH OWNER/SERVICE PROVIDER FOR EXACT LOCATIONS AND CONNECTION REQUIREMENTS PRIOR TO INSTALLATION.
2. PROVIDE NEW UNDERGROUND CONDUITS PER SERVICE PROVIDER REQUIREMENTS. CONTRACTOR MUST PROVIDE PULL ROPES IN CONDUIT, CONTRACTOR TO PROVIDE GROUNDING REQUIRED.
3. INTERCEPT EXISTING CONDUIT AT EXISTING MANHOLE AFTER EXISTING ELECTRICAL CABLE IS REMOVED. CONTRACTOR TO FIELD VERIFY EXACT LOCATION OF EXISTING MANHOLE PRIOR TO START OF WORK.
4. PROVIDE NEW OUTDOOR WIRELESS ACCESS POINT POLE MOUNT. CONTRACTOR TO PROVIDE COMPLETE SYSTEM AS REQUIRED INCLUDING NEW (2) CAT-6 CABLING AND CONNECTIONS TO THE MDF ROOM IN COMMUNITY BUILDING PER SPECIFICATIONS. WHERE CABLING DISTANCES EXCEED THE 100 METER LIMITATION, CONTRACTOR MUST PROVIDE EXTENDER TO MEET REQUIRED CONNECTIVITY.
5. PROVIDE NEW OUTDOOR POLE MOUNT IP CAMERA, CAMERA MUST HAVE 270 DEGREE VIEWING ANGLE. PROVIDE PER PLANS AND SPECIFICATION. CONTRACTOR TO PROVIDE COMPLETE SYSTEM AS REQUIRED INCLUDING CAT-6 CABLING AND CONNECTIONS TO THE CCTV SERVERS AND EQUIPMENT IN MDF ROOM IN COMMUNITY BUILDING PER SPECIFICATIONS. WHERE CABLING DISTANCES EXCEED THE 100 METER LIMITATION, CONTRACTOR MUST PROVIDE EXTENDER TO MEET REQUIRED CONNECTIVITY.
6. PROVIDE NEW MIN. 2" UNDERGROUND CONDUIT AND CONNECTIONS FROM MPOE TO UNDERGROUND PULL BOX THEN EXTEND NEW 2" CONDUIT TO NEXT PULL BOX PER PLANS AS REQUIRED FOR A COMPLETE WORKING SYSTEM. CONTRACTOR SHALL BE RESPONSIBLE FOR COMPLETE CONNECTIONS AND TERMINATION PER PROJECT.
7. PROVIDE NEW MIN. 12" X12" CONCRETE POLYMER PULL BOX (BY ELECTRICAL) AT EACH LIGHT POLE AS SHOWN ON PLANS THEN EXTEND NEW MIN. 1" UP THE POLE TO WIRELESS ACCESS POINT AND CAMERA FOR COMPLETE COMPLETE CONNECTIONS ND TEMINATIONS AS REQUIRED.
8. PROVIDE NEW MIN. 1" FROM NEW U.G. PULLBOX UP TO SCORE BOARD FOR NEW DATA CABLING CONNECTIONS FROM MDF AS REQUIRED. CONTRACTOR TO COORDINATE WITH SCORE BOARD INSTALLATION AS TO QTY OF DATA CABLES REQUIRED. WHERE CABLING DISTANCES EXCEED THE 100 METER LIMITATION, CONTRACTOR MUST PROVIDE EXTENDER TO MEET REQUIRED CONNECTIVITY.
9. PROVIDE NEW AV SPEAKERS WITH CABLING AND CONNECTIONS TO AV SYSTEM HEAD END PER AV SCOPE (SEE SHEET LV5.04/1) CONTRACTOR MUST COORDINATE AND OBTAIN CITY APPROVAL FOR HEIGH AND LOCATION AS PLANS ARE DIAGRAMATIC FOR LOCATIONS.
10. PROVIDE (2) OUTDOOR 2 GANG BOXES WITH (2) CAT 6 CABLING AT EACH AND AV CABLING AND CONNECTIONS PER AV PLANS (SEE SHEET LV5.04) CONTRACOR MUST COORDINATE WITH CITY FOR FINAL LOCATION WITH NO OBSTURCTIONS AS THESE PLANS ARE DIAAGRAMATIC FOR APPROXIMATE PLACEMENT . MOUNT AT 48" A.F.F..

AGENCY

FLEWELLING & MOODY
architecture planning interiors

HEADQUARTERS OFFICE:
99 S. Lake Avenue, Suite 300
Pasadena, CA 91101
Phone: 323.543.8300
E-Mail: fm-pasadena@flewelling-moody.com

ANTELOPE VALLEY OFFICE:
1035 West Lancaster Bouldvard
Lancaster, California 93534
Phone: 661.949.0771
E-Mail: fm-lancaster@flewelling-moody.com

An Employee Owned Corporation

ARCHITECT

CONSULTANT

Budlong
An MBE|SBE|DBE|LSBE Firm
Glendale|Downtown LA|Fremont|Camarillo
W W W . B U D L O N G . C O M
Job No. 23-140

REGISTERED PROFESSIONAL ENGINEER
MANN H. CHRISTIAN
No. 22864
ELECTRICAL
STATE OF CA

Drawn by: Author

Check by: Checker

Revisions

No.	Date	Description
	01/26/24	100% DD
	03/01/24	50% CD
	05/09/24	90% CD
	08/05/24	100% CD
	11/25/24	100% CD V2
	01/31/25	100% CD V3
1	08/27/2025	BID ALTERNATE

All dimensions must be checked at the job by the contractor who accepts full responsibility for their accuracy under the contract. These plans & the specifications in connection therewith have been prepared for a specific site. Any and all responsibility for their use in whole or in part on any other site is hereby disclaimed by Flewelling & Moody.

CITY OF RIDGECREST

SGT. JOHN PINNEY MEMORIAL POOL REPLACEMENT

205 S WARNER ST, RIDGECREST, CA 93555

Drawing Title

LOW VOLTAGE SITE PLAN ALT 6

Job No. 3055-0000

Sheet No. **LV1.01A6**

Date 08/07/2024

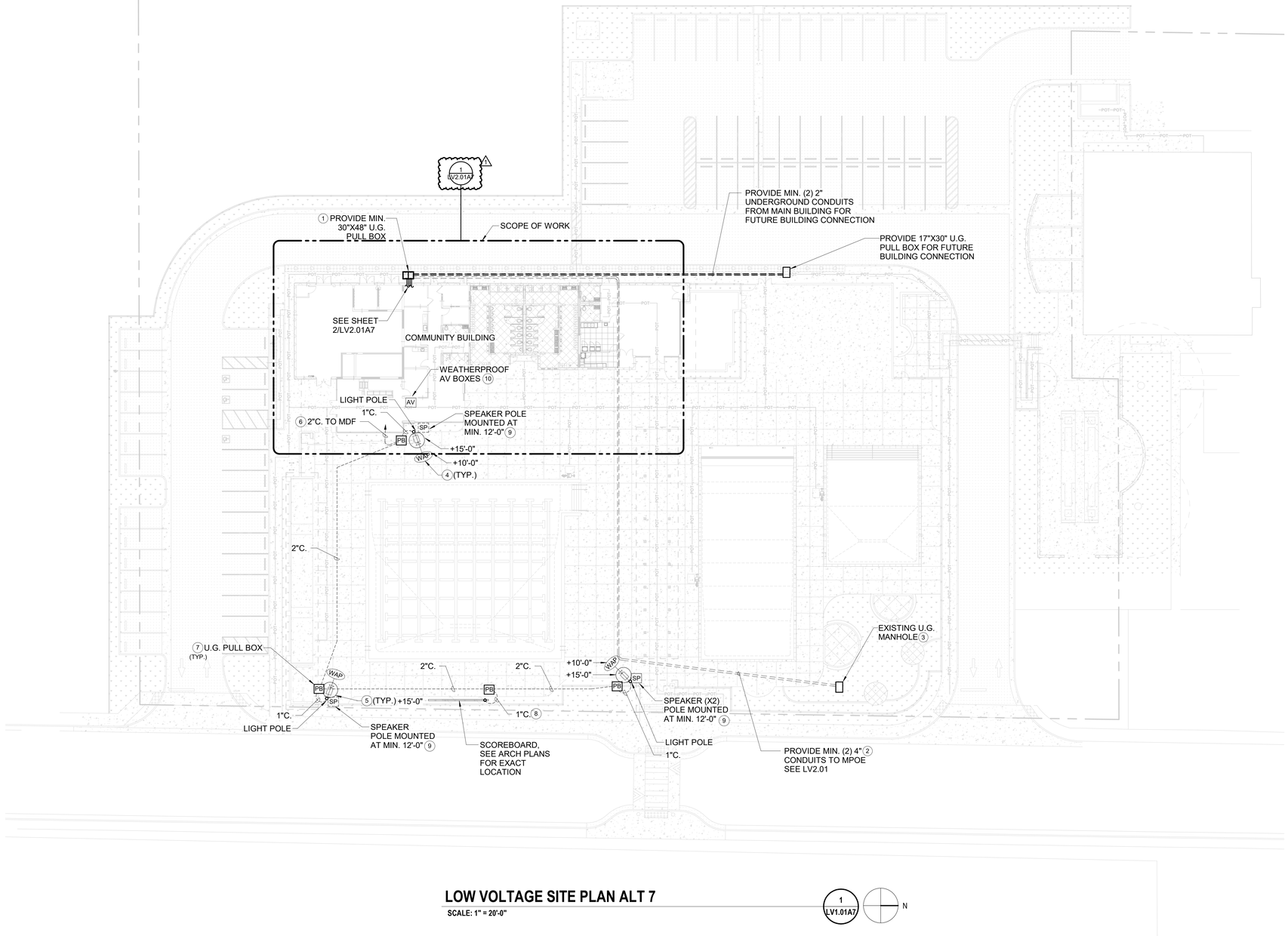

LOW VOLTAGE SITE PLAN ALT 7

SCALE: 1" = 20'-0"

1 LV1.01A7

N

GENERAL NOTES

1. ALL UNDERGROUND CONDUITS SHALL BE INSTALLED AT MINIMUM 24" BELOW FINISHED GRADE UNLESS NOTED OTHERWISE. ALL UTILITY UNDERGROUND CONDUITS SHALL BE INSTALLED PER SERVING UTILITY COMPANY STANDARDS AND DIRECTIONS.
2. ALL UNDERGROUND CONDUITS SHALL BE PVC SCHEDULE-80 AND MINIMUM OF 4" UNLESS NOTED OTHERWISE.
3. EXTREME CAUTION IN EXCAVATING AND TRENCHING ON THIS SITE TO AVOID EXISTING DUCTS, PIPING OR CONDUITS, ETC., AND TO PREVENT HAZARD TO PERSONNEL AND/OR DAMAGE TO EXISTING UNDERGROUND UTILITIES OR STRUCTURES WHETHER OR NOT SHOWN AND INSTALLED BY ANY OTHER CONTRACTS. THE ENGINEER IS NOT RESPONSIBLE FOR THE LOCATION OF UNDERGROUND UTILITIES OR STRUCTURES WHETHER OR NOT SHOWN OR DETAILED AND INSTALLED BY ANY OTHER CONTRACTS. THE CONTRACTOR SHALL IMMEDIATELY NOTIFY THE ENGINEER SHOULD ANY OBSTRUCTIONS OCCUR DURING EXCAVATING AND TRENCHING.
4. PROVIDE THE REQUIRED AUXILIARY MANHOLES OR PULL-BOXES PER CEC 352.26/358.26 TO FACILITATE THE INSTALLATION, THERE SHALL NOT BE MORE THAN THE EQUIVALENT OF FOUR QUARTER BENDS(360 DEGREES TOTAL) BETWEEN PULL POINTS FOR EXAMPLE, CONDUIT BODIES AND BOXES.
5. CONTRACTOR IS REQUIRED TO SIZE THE ENCLOSURES PER CEC 314. SIZES SHOWN ON THE PLANS ARE FOR REFERENCE ONLY. CONTRACTOR TO PROVIDE THE BIGGER OR EQUIVALENT SIZE PULL BOX. THE DEPTH OF THE PULL BOX SHALL HAVE ENOUGH SPACE TO ACCOMMODATE THE LARGEST SIZE CONDUITS AND RELATED LOCKNUTS, BUSHING AND ALL OTHER ACCESSORIES.
6. ALL UNDERGROUND CONDUITS SHALL BE INSTALLED AT MIN. 24" BELOW FINISHED GRADE UNLESS NOTED OTHERWISE. ALL UTILITY UNDERGROUND CONDUITS SHALL BE INSTALLED PER SERVING UTILITY COMPANY STANDARDS AND DIRECTIONS. CONDUITS TO BE ENCASED IN CONCRETE FOR CONDUITS 2" AND ABOVE. SMALLER CONDUITS CAN BE DIRECTLY BURIED WITH NATIVE EARTH MATERIAL. PROVIDE MIN 6" SOIL BEDDING WHERE CONDUITS ARE DIRECTLY BURIED

KEYNOTES

1. PROVIDE NEW UNDERGROUND SERVICE PROVIDER PULL BOX AS REQUIRED FOR SERVICE PROVIDER CONNECTIONS. CONTRACTOR MUST COORDINATE WITH OWNER/SERVICE PROVIDER FOR EXACT LOCATIONS AND CONNECTION REQUIREMENTS PRIOR TO INSTALLATION.
2. PROVIDE NEW UNDERGROUND CONDUITS PER SERVICE PROVIDER REQUIREMENTS. CONTRACTOR MUST PROVIDE PULL ROPES IN CONDUIT, CONTRACTOR TO PROVIDE GROUNDING REQUIRED.
3. INTERCEPT EXISTING CONDUIT AT EXISTING MANHOLE AFTER EXISTING ELECTRICAL CABLE IS REMOVED. CONTRACTOR TO FIELD VERIFY EXACT LOCATION OF EXISTING MANHOLE PRIOR TO START OF WORK.
4. PROVIDE NEW OUTDOOR WIRELESS ACCESS POINT POLE MOUNT. CONTRACTOR TO PROVIDE COMPLETE SYSTEM AS REQUIRED INCLUDING NEW (2) CAT-6 CABLING AND CONNECTIONS TO THE MDF ROOM IN COMMUNITY BUILDING PER SPECIFICATIONS. WHERE CABLING DISTANCES EXCEED THE 100 METER LIMITATION, CONTRACTOR MUST PROVIDE EXTENDER TO MEET REQUIRED CONNECTIVITY.
5. PROVIDE NEW OUTDOOR POLE MOUNT IP CAMERA, CAMERA MUST HAVE 270 DEGREE VIEWING ANGLE. PROVIDE PER PLANS AND SPECIFICATION. CONTRACTOR TO PROVIDE COMPLETE SYSTEM AS REQUIRED INCLUDING CAT-6 CABLING AND CONNECTIONS TO THE CCTV SERVERS AND EQUIPMENT IN MDF ROOM IN COMMUNITY BUILDING PER SPECIFICATIONS. WHERE CABLING DISTANCES EXCEED THE 100 METER LIMITATION, CONTRACTOR MUST PROVIDE EXTENDER TO MEET REQUIRED CONNECTIVITY.
6. PROVIDE NEW MIN. 2" UNDERGROUND CONDUIT AND CONNECTIONS FROM MPOE TO UNDERGROUND PULL BOX THEN EXTEND NEW 2" CONDUIT TO NEXT PULL BOX PER PLANS AS REQUIRED FOR A COMPLETE WORKING SYSTEM. CONTRACTOR SHALL BE RESPONSIBLE FOR COMPLETE CONNECTIONS AND TERMINATION PER PROJECT.
7. PROVIDE NEW MIN. 12" X12" CONCRETE POLYMER PULL BOX (BY ELECTRICAL) AT EACH LIGHT POLE AS SHOWN ON PLANS THEN EXTEND NEW MIN. 1" UP THE POLE TO WIRELESS ACCESS POINT AND CAMERA FOR COMPLETE COMPLETE CONNECTIONS ND TEMINATIONS AS REQUIRED.
8. PROVIDE NEW MIN. 1" FROM NEW U.G. PULLBOX UP TO SCORE BOARD FOR NEW DATA CABLING CONNECTIONS FROM MDF AS REQUIRED. CONTRACTOR TO COORDINATE WITH SCORE BOARD INSTALLATION AS TO QTY OF DATA CABLES REQUIRED. WHERE CABLING DISTANCES EXCEED THE 100 METER LIMITATION, CONTRACTOR MUST PROVIDE EXTENDER TO MEET REQUIRED CONNECTIVITY.
9. PROVIDE NEW AV SPEAKERS WITH CABLING AND CONNECTIONS TO AV SYSTEM HEAD END PER AV SCOPE (SEE SHEET LV5.04/1) CONTRACTOR MUST COORDINATE AND OBTAIN CITY APPROVAL FOR HEIGH AND LOCATION AS PLANS ARE DIAGRAMATIC FOR LOCATIONS.
10. PROVIDE (2) OUTDOOR 2 GANG BOXES WITH (2) CAT 6 CABLING AT EACH AND AV CABLING AND CONNECTIONS PER AV PLANS (SEE SHEET LV5.04) CONTRACOR MUST COORDINATE WITH CITY FOR FINAL LOCATION WITH NO OBSTURCTIONS AS THESE PLANS ARE DIAAGRAMATIC FOR APPROXIMATE PLACEMENT . MOUNT AT 48" A.F.F..

AGENCY

FLEWELLING & MOODY
architecture planning interiors

HEADQUARTERS OFFICE:
99 S. Lake Avenue, Suite 300
Pasadena, CA 91101
Phone: 323.543.8300
E-Mail: fm-pasadena@flewelling-moody.com

ANTELOPE VALLEY OFFICE:
1035 West Lancaster Bouldvard
Lancaster, California 93534
Phone: 661.949.0771
E-Mail: fm-lancaster@flewelling-moody.com

An Employee Owned Corporation

ARCHITECT

CONSULTANT

Budlong
An MBE|SBE|DBE|LSBE Firm
Glendale|Downtown LA|Fremont|Camarillo
W W W . B U D L O N G . C O M
Job No. 23-140

REGISTERED PROFESSIONAL ENGINEER
MANN H. CHRISTIAN
No. 22864
ELECTRICAL
STATE OF CA

Drawn by: Author

Check by: Checker

Revisions

No.	Date	Description
	01/26/24	100% DD
	03/01/24	50% CD
	05/09/24	90% CD
	08/05/24	100% CD
	11/25/24	100% CD V2
	01/31/25	100% CD V3
1	08/27/2025	BID ALTERNATE

All dimensions must be checked at the job by the contractor who accepts full responsibility for their accuracy under the contract. These plans & the specifications in connection therewith have been prepared for a specific site. Any and all responsibility for their use in whole or in part on any other site is hereby disclaimed by Flewelling & Moody.

CITY OF RIDGECREST

SGT. JOHN PINNEY MEMORIAL POOL REPLACEMENT

205 S WARNER ST, RIDGECREST, CA 93555

Drawing Title

LOW VOLTAGE SITE PLAN ALT 7

Job No. 3055-0000

Sheet No. **LV1.01A7**

Date 08/07/2024

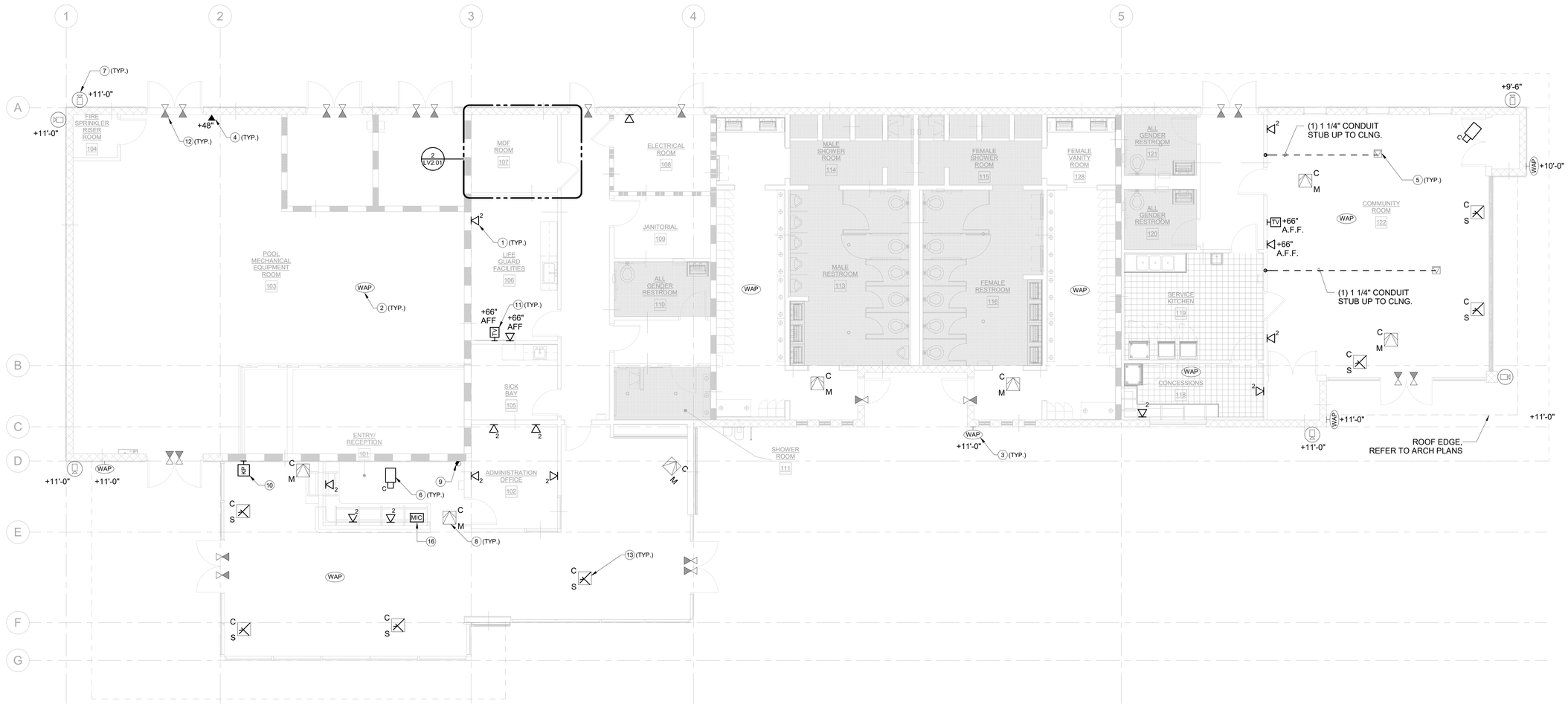

LOW VOLTAGE COMMUNITY BUILDING FLOOR PLAN

SCALE: 3/16" = 1'-0"

1 / LV2.01

N

MDF ROOM

SCALE: 3/8" = 1'-0"

2 / LV2.01

GENERAL NOTES

1. CONTRACTOR TO COORDINATE WITH A/V CONSULTANT FOR PROVIDING ANY LOW VOLTAGE CABLING TO THE A/V SYSTEM TO BE INSTALLED.
2. CONTRACTOR TO PROVIDE COMPLETE SYSTEMS PER SPECIFICATIONS AS REQUIRED BY THE CITY OF RIDGECREST.
3. PLANS PROVIDED ARE DIAGRAMATIC ONLY, CONTRACTOR SHALL BE RESPONSIBLE FOR COORDINATING AND PROVIDING FINAL DEVICE AND EQUIPMENT LOCATIONS PER THE CITY OF RIDGECREST REQUIREMENTS WEATHER OR NOT SHOWN ON PLANS.
4. CONTRACTOR TO PROVIDE SHOP DRAWINGS AS REQUIRED FOR APPROVAL PRIOR TO START OF WORK. WHERE CONTRACTOR PLANS ARE NOT PREVIOUSLY APPROVED IT SHALL BE AT OWNERS DISCRETION TO PROVIDE DEVIATIONS WHERE CONTRACTOR WILL PROVIDE AT NO ADDITIONAL COST.

KEYNOTES

1. PROVIDE NEW WALL MOUNTED DATA OUTLET. PROVIDE AND INSTALL OUTLET IN A 5S BACKBOX WITH A SINGLE-GANG PLASTER RING. INSTALL A (1) 1" EMT CONDUIT FROM BACKBOX UP TO ACCESSIBLE CEILING SPACE WITH CAT6A CABLES, THEN RUN CAT6A CABLES IN ACCESSIBLE CEILING SPACE USING J-HOOKS AND THEN TERMINATE AT IDF RACK SERVING THIS AREA. PROVIDE FACEPLATES AND RJ45 JACKS FOR DATA. PROVIDE REMOVABLE BLANK INSERTS FOR UNUSED PORTS. PROVIDE ALL TERMINATION FOR A COMPLETE WORKING SYSTEM.
2. PROVIDE NEW WIRELESS ACCESS POINT, CEILING MOUNT. PROVIDE DATA OUTLET FOR WIRELESS ACCESS POINT, 2-PORT PLENUM RATED SURFACE MOUNT BOX ABOVE CEILING AS INDICATED ON DRAWINGS. USE J-HOOKS TO SUPPORT NEW CABLING ABOVE ACCESSIBLE CEILING SPACE. FOR INACCESSIBLE CEILINGS SPACES NEW CONDUITS SHALL BE PROVIDED ABOVE CEILING TO THE NEAREST TELECOM ROOM. PROVIDE 20' SLACK CABLE COILS ABOVE CEILING AT OUTLET LOCATION FOR FUTURE RELOCATION.
3. PROVIDE NEW OUTDOOR WALL MOUNTED WIRELESS ACCESS POINT PER PLANS AND SPECIFICATION. CONTRACTOR TO PROVIDE COMPLETE SYSTEM AS REQUIRED INCLUDING NEW (2) CAT-6 CABLING AND CONNECTIONS TO THE MDF ROOM IN COMMUNITY BUILDING PER SPECIFICATIONS. NO EXPOSED CABLING IS ALLOWED.
4. PROVIDE NEW PHONE OUTLET, SEE SYMBOL LEGEND FOR INSTALLATION REQUIREMENTS.
5. PROVIDE NEW (2) FLOOR DATA PORTS, CABLING AND FACEPLATE AS REQUIRED FOR FOR A/V INPUTS. CONTRACTOR SHALL BE RESPONSIBLE TO COORDINATE WITH ELECTRICAL TO PROVIDE FLOOR BOX AND CONDUIT TO NEAREST WALL THEN UP TO CEILING SPACE FOR RUNNING FUTURE CABLING. CONDUIT MUST HAVE PULL STRING AS REQUIRED.
6. PROVIDE NEW CEILING MOUNT IP CAMERA PER PLANS AND SPECIFICATION. CONTRACTOR TO PROVIDE COMPLETE SYSTEM AS REQUIRED INCLUDING CAT-6 CABLING AND CONNECTIONS TO THE CCTV SERVERS AND EQUIPMENT PER SPECIFICATIONS. PROVIDE MIN. 3/4" CONDUIT AS REQUIRED, NO EXPOSED CABLING SHALL BE PERMITTED.
7. PROVIDE NEW WALL MOUNT IP CAMERA, CAMERA MUST HAVE 270 DEGREE VIEWING ANGLE. PROVIDE PER PLANS AND SPECIFICATION. CONTRACTOR TO PROVIDE COMPLETE SYSTEM AS REQUIRED INCLUDING CAT-6 CABLING AND CONNECTIONS TO THE CCTV SERVERS AND EQUIPMENT PER SPECIFICATIONS. PROVIDE NEW MIN. 3/4" CONDUIT AS REQUIRED, NO EXPOSED CABLING SHALL BE PERMITTED.
8. PROVIDE NEW INTRUSION MOTION DETECTORS WITH CABLING TO MDF LOCATED AT MAIN BUILDING PER PLANS AND SPECIFICATIONS. CONTRACTOR SHALL BE RESPONSIBLE TO PROVIDE COMPLETE CONNECTIONS AND TERMINATION AS REQUIRED.
9. PROVIDE INTRUSION SECURITY SIREN AT 8'-0" A.F.F. CONTRACTOR MUST COORDINATE WITH ARCHITECTURE/FACILITIES FOR FINAL LOCATION AS REQUIRED.
10. PROVIDE NEW KEYPAD FOR INTRUSION ALARM SYSTEM WITH CABLING TO MDF LOCATED AT MAIN BUILDING PER PLANS AND SPECIFICATIONS. CONTRACTOR SHALL BE RESPONSIBLE TO PROVIDE COMPLETE CONNECTIONS AND TERMINATION AS REQUIRED.
11. PROVIDE AND INSTALL 4S BOX (DEEP TYPE) WITH 2 GANG RING FOR TV OUTLET. PROVIDE 1-1/4" CONDUIT STUB UP TO 6" ABOVE ACCESSIBLE CEILING SPACE. PROVIDE AND INSTALL 1 CAT6 DATA CABLE .CONTRACTOR SHALL BE RESPONSIBLE TO PROVIDE COMPLETE CONNECTIONS AND TERMINATION AS REQUIRED.
12. PROVIDE NEW DOOR CONTACTS WITH NEW 3/4" EMT FLEX ON SECURE SIDE TO ACCESSIBLE CEILING SPACE WITH PULL STRING FOR COMPLETE CONNECTION.
13. ELECTRICAL CONTRACTOR TO PROVIDE NEW MIN 3/4" CONDUIT HOME RUN TO IDF FOR NEW GLASS BREAK SENSOR CONNECTIONS AND TERMINATIONS. WHERE DEVICE IS ON HARD LID CEILINGS, PROVIDE 4S BOX (DEEP TYPE) WITH SINGLE GANG RING FLUSH MOUNT. WHERE GLASS BREAKS ARE WALL MOUNTED, 4S BOX SHALL BE SURFACE MOUNTED. CONDUIT SHALL BE STUBBED UP TO ABOVE CEILING SPACE THEN HOME RUN TO MCR.
14. PROVIDE GROUND BUSBAR WITH MIN. #2/0 AWG INSULATED GROUND CABLE AND CONDUIT BONDED TO MAIN BUILDING GROUND SYSTEM. ALL EQUIPMENT INCLUDING RACKS, CABLE TRAY, ETC. MUST BE PROVIDED WITH MIN. #6 (SOLID) AWG COPPER GROUND WIRE AS REQUIRED.
15. CONTRACTOR TO PROVIDE AV EQUIPMENT TO BE MOUNTED AT SECUTIY RACK IN ORDER TO MINIMIZE AV SPACE ALLOCATION. CONTRACTOR SHALL BE REESPONSIBLE FOR ALL CABLING AN CONNECTIONS TO AV PER PLANS (SEE SHEET LV5.05) AS PART OF HIS SCOPE NO EXCEPTIONS TAKEN.
16. PROVIDE MICROPHONE AND CABLING BACK TO AV SYSTEM AS REQUIRED PER AV. CONTRACOR MUST COORDINATE WITH CITY FOR FINAL LOCATION AS TO AVOID FUTURE CHANGES, NO EXCEPTIONS WILL BE TAKEN.

AGENCY

FLEWELLING & MOODY
architecture planning interiors

HEADQUARTERS OFFICE:
99 S. Lake Avenue, Suite 300
Pasadena, CA 91101
Phone: 323.543.8300
E-Mail: fm-pasadena@flewelling-moody.com

ANTELOPE VALLEY OFFICE:
1035 West Lancaster Boulevard
Lancaster, California 93534
Phone: 661.949.0771
E-Mail: fm-lancaster@flewelling-moody.com

An Employee Owned Corporation

ARCHITECT

CONSULTANT

Budlong
An MBE|SBE|DBE|LSBE Firm
Glendale|Downtown LA|Fremont|Camarillo
W W W . B U D L O N G . C O M
Job No. 23-140

REGISTERED PROFESSIONAL ENGINEER MARLIN N. CHRISTEN No. E 22864 ELECTRICAL STATE OF CALIFORNIA

Drawn by: Author

Check by: Checker

Revisions

No.	Date	Description
	01/26/24	100% DD
	03/01/24	50% CD
	05/09/24	90% CD
	08/05/24	100% CD
	11/25/24	100% CD V2
	01/31/25	100% CD V3
1	6/9/25	BID ALTERNATE

All dimensions must be checked at the job by the contractor who accepts full responsibility for their accuracy under the contract. These plans & the specifications in connection therewith have been prepared for a specific site. Any and all responsibility for their use in whole or in part on any other site is hereby disclaimed by Flewelling & Moody.

CITY OF RIDGECREST

SGT. JOHN PINNEY MEMORIAL POOL REPLACEMENT

205 S WARNER ST, RIDGECREST, CA 93555

Drawing Title

LOW VOLTAGE COMMUNITY BUILDING FLOOR PLAN

Job No. 3055-0000

Sheet No. LV2.01

Date 08/07/2024

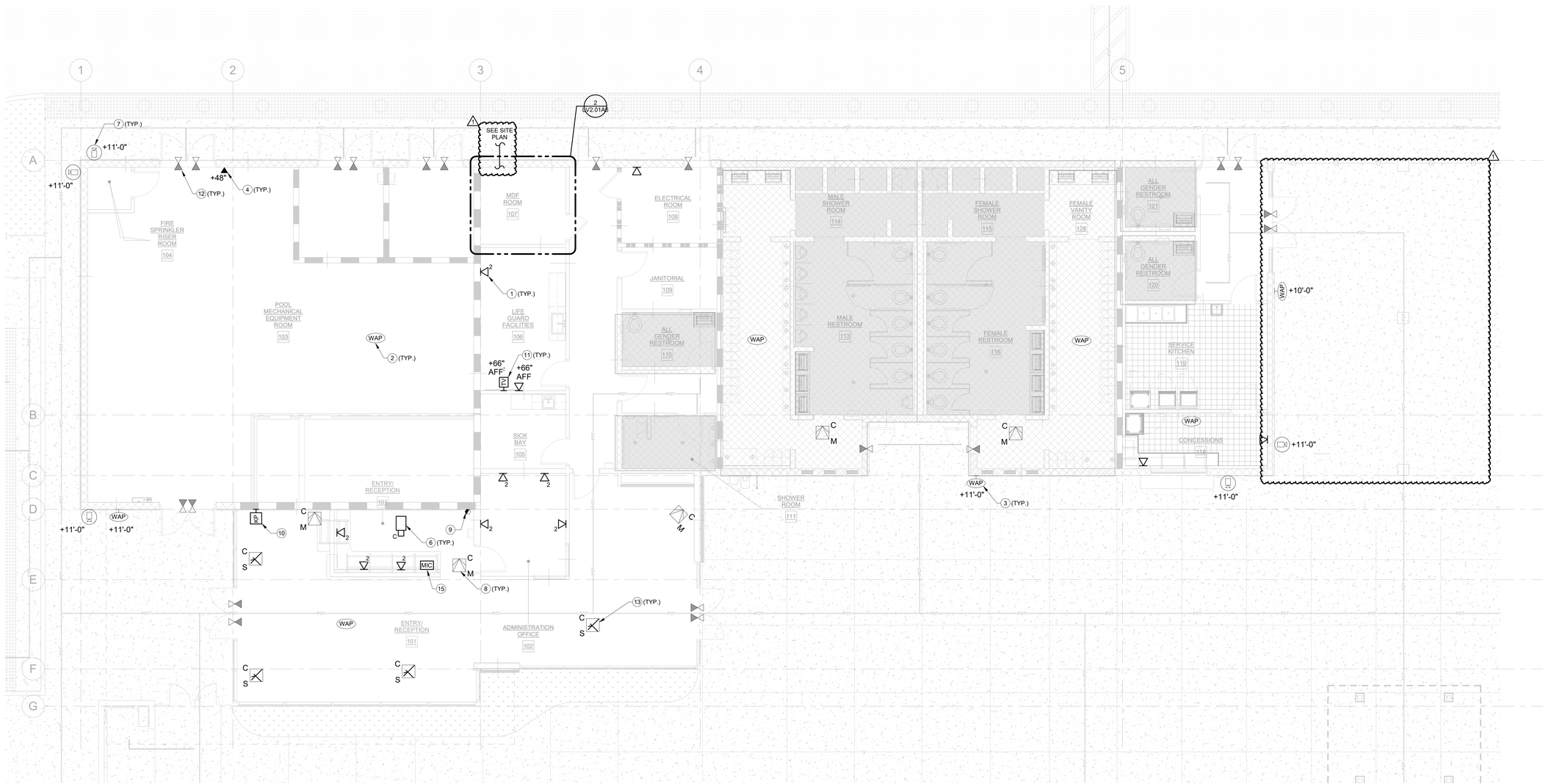

LOW VOLTAGE COMMUNITY BUILDING FLOOR PLAN ALT 6

SCALE: 3/16" = 1'-0"

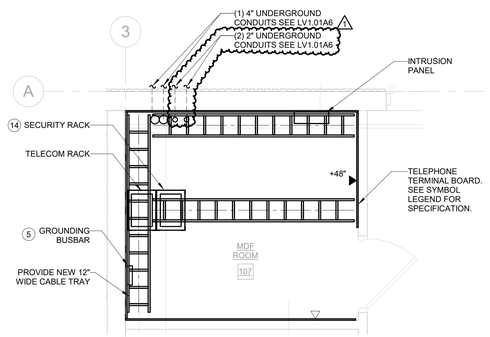

MDF ROOM ENLARGE PLAN

SCALE: 3/8" = 1'-0"

GENERAL NOTES

1. CONTRACTOR TO COORDINATE WITH A/V CONSULTANT FOR PROVIDING ANY LOW VOLTAGE CABLING TO THE A/V SYSTEM TO BE INSTALLED.
2. CONTRACTOR TO PROVIDE COMPLETE SYSTEMS PER SPECIFICATIONS AS REQUIRED BY THE CITY OF RIDGECREST.
3. PLANS PROVIDED ARE DIAGRAMATIC ONLY, CONTRACTOR SHALL BE RESPONSIBLE FOR COORDINATING AND PROVIDING FINAL DEVICE AND EQUIPMENT LOCATIONS PER CITY OF RIDGECREST REQUIREMENTS WEATHER OR NOT SHOWN ON PLANS.
4. CONTRACTOR TO PROVIDE SHOP DRAWINGS AS REQUIRED FOR APPROVAL PRIOR TO START OF WORK. WHERE CONTRACTOR PLANS ARE NOT PREVIOUSLY APPROVED IT SHALL BE AT OWNERS DISCRETION TO PROVIDE DEVIATIONS WHERE CONTRACTOR WILL PROVIDE AT NO ADDITIONAL COST.

KEYNOTES

1. PROVIDE NEW WALL MOUNTED DATA OUTLET. PROVIDE AND INSTALL OUTLET IN A 5S BACKBOX WITH A SINGLE-GANG PLASTER RING. INSTALL A (1) 1" EMT CONDUIT FROM BACKBOX UP TO ACCESSIBLE CEILING SPACE WITH CAT6A CABLES, THEN RUN CAT6A CABLES IN ACCESSIBLE CEILING SPACE USING J-HOOKS AND THEN TERMINATE AT IDF RACK SERVING THIS AREA. PROVIDE FACEPLATES AND RJ45 JACKS FOR DATA. PROVIDE REMOVABLE BLANK INSERTS FOR UNUSED PORTS. PROVIDE ALL TERMINATION FOR A COMPLETE WORKING SYSTEM.
2. PROVIDE NEW WIRELESS ACCESS POINT, CEILING MOUNT. PROVIDE DATA OUTLET FOR WIRELESS ACCESS POINT, 2-PORT PLENUM RATED SURFACE MOUNT BOX ABOVE CEILING AS INDICATED ON DRAWINGS. USE J-HOOKS TO SUPPORT NEW CABLING ABOVE ACCESSIBLE CEILING SPACE. FOR INACCESSIBLE CEILINGS SPACES NEW CONDUITS SHALL BE PROVIDED ABOVE CEILING TO THE NEAREST TELECOM ROOM. PROVIDE 20' SLACK CABLE COILS ABOVE CEILING AT OUTLET LOCATION FOR FUTURE RELOCATION.
3. PROVIDE NEW OUTDOOR WALL MOUNTED WIRELESS ACCESS POINT PER PLANS AND SPECIFICATION. CONTRACTOR TO PROVIDE COMPLETE SYSTEM AS REQUIRED INCLUDING NEW (2) CAT-6 CABLING AND CONNECTIONS TO THE MDF ROOM IN COMMUNITY BUILDING PER SPECIFICATIONS. NO EXPOSED CABLING IS ALLOWED.
4. PROVIDE NEW PHONE OUTLET, SEE SYMBOL LEGEND FOR INSTALLATION REQUIREMENTS.
5. PROVIDE GROUND BUSBAR WITH MIN. #2/0 AWG INSULATED GROUND CABLE AND CONDUIT BONDED TO MAIN BUILDING GROUND SYSTEM. ALL EQUIPMENT INCLUDING RACKS, CABLE TRAY, ETC. MUST BE PROVIDED WITH MIN. #6 (SOLID) AWG COPPER GROUND WIRE AS REQUIRED.
6. PROVIDE NEW CEILING MOUNT IP CAMERA PER PLANS AND SPECIFICATION. CONTRACTOR TO PROVIDE COMPLETE SYSTEM AS REQUIRED INCLUDING CAT-6 CABLING AND CONNECTIONS TO THE CCTV SERVERS AND EQUIPMENT PER SPECIFICATIONS. PROVIDE MIN. 3/4" CONDUIT AS REQUIRED, NO EXPOSED CABLING SHALL BE PERMITTED.

KEYNOTES

7. PROVIDE NEW WALL MOUNT IP CAMERA, CAMERA MUST HAVE 270 DEGREE VIEWING ANGLE. PROVIDE PER PLANS AND SPECIFICATION. CONTRACTOR TO PROVIDE COMPLETE SYSTEM AS REQUIRED INCLUDING CAT-6 CABLING AND CONNECTIONS TO THE CCTV SERVERS AND EQUIPMENT PER SPECIFICATIONS. PROVIDE NEW MIN. 3/4" CONDUIT AS REQUIRED, NO EXPOSED CABLING SHALL BE PERMITTED.
8. PROVIDE NEW INTRUSION MOTION DETECTORS WITH CABLING TO MDF LOCATED AT MAIN BUILDING PER PLANS AND SPECIFICATIONS. CONTRACTOR SHALL BE RESPONSIBLE TO PROVIDE COMPLETE CONNECTIONS AND TERMINATION AS REQUIRED.
9. PROVIDE INTRUSION SECURITY SIREN AT 8'-0" A.F.F. CONTRACTOR MUST COORDINATE WITH ARCHITECTURE/FACILITIES FOR FINAL LOCATION AS REQUIRED. CONTRACTOR SHALL BE RESPONSIBLE TO PROVIDE COMPLETE CONNECTIONS AND TERMINATION AS REQUIRED
10. PROVIDE NEW KEYPAD FOR INTRUSION ALARM SYSTEM WITH CABLING TO MDF LOCATED AT MAIN BUILDING PER PLANS AND SPECIFICATIONS. CONTRACTOR SHALL BE RESPONSIBLE TO PROVIDE COMPLETE CONNECTIONS AND TERMINATION AS REQUIRED.
11. PROVIDE AND INSTALL 4S BOX (DEEP TYPE) WITH 2 GANG RING FOR TV OUTLET. PROVIDE 1-1/4" CONDUIT STUB UP TO 6" ABOVE ACCESSIBLE CEILING SPACE. PROVIDE AND INSTALL (1) CAT6 DATA CABLE .CONTRACTOR SHALL BE RESPONSIBLE TO PROVIDE COMPLETE CONNECTIONS AND TERMINATION AS REQUIRED.
12. PROVIDE NEW DOOR CONTACTS WITH NEW 3/4" EMT FLEX ON SECURE SIDE TO ACCESSIBLE CEILING SPACE WITH PULL STRING FOR COMPLETE CONNECTION.
13. ELECTRICAL CONTRACTOR TO PROVIDE NEW MIN 3/4" CONDUIT HOME RUN TO IDF FOR NEW GLASS BREAK SENSOR CONNECTIONS AND TERMINATIONS. WHERE DEVICE IS ON HARD LID CEILINGS, PROVIDE 4S BOX (DEEP TYPE) WITH SINGLE GANG RING FLUSH MOUNT. WHERE GLASS BREAKS ARE WALL MOUNTED, 4S BOX SHALL BE SURFACE MOUNTED. CONDUIT SHALL BE STUBBED UP TO ABOVE CEILING SPACE THEN HOME RUN TO MDF.
14. CONTRACTOR TO PROVIDE AV EQUIPMENT TO BE MOUNTED AT SECUTIY RACK IN ORDER TO MINIMIZE AV SPACE ALLOCATION. CONTRACTOR SHALL BE REESPONSIBLE FOR ALL CABLING AN CONNECTIONS TO AV PER PLANS (SEE SHEET LV5.05) AS PART OF HIS SCOPE NO EXCEPTIONS TAKEN.
15. PROVIDE MICROPHONE AND CABLING BACK TO AV SYSTEM AS REQUIRED PER AV. CONTRACOR MUST COORDINATE WITH CITY FOR FINAL LOCATION AS TO AVOID FUTURE CHANGES, NO EXCEPTIONS WILL BE TAKEN.

.

AGENCY

FLEWELLING & MOODY
architecture planning interiors

HEADQUARTERS OFFICE:
99 S. Lake Avenue, Suite 300
Pasadena, CA 91101
Phone: 323.543.8300
E-Mail: fm-pasadena@flewelling-moody.com

ANTELOPE VALLEY OFFICE:
1035 West Lancaster Boulevard
Lancaster, California 93534
Phone: 661.949.0771
E-Mail: fm-lancaster@flewelling-moody.com

An Employee Owned Corporation

ARCHITECT

CONSULTANT

Budlong
An MBE|SBE|DBE|LSBE Firm
Glendale|Downtown LA|Fremont|Camarillo
WWW.BUDLONG.COM
Job No. 23-140

REGISTERED PROFESSIONAL ENGINEER SHAUN H. CHRISTIE No. 22864 ELECTRICAL STATE OF CALIFORNIA

Drawn by: Author

Check by: Checker

Revisions

No.	Date	Description
	01/26/24	100% DD
	03/01/24	50% CD
	05/09/24	90% CD
	08/05/24	100% CD
	11/25/24	100% CD V2
	01/31/25	100% CD V3
1	08/27/2025	BID ALTERNATE

All dimensions must be checked at the job by the contractor who accepts full responsibility for their accuracy under the contract. These plans & the specifications in connection therewith have been prepared for a specific site. Any and all responsibility for their use in whole or in part on any other site is hereby disclaimed by Flewelling & Moody.

CITY OF RIDGECREST

SGT. JOHN PINNEY MEMORIAL POOL REPLACEMENT

205 S WARNER ST, RIDGECREST, CA 93555

Drawing Title

LOW VOLTAGE COMMUNITY BUILDING FLOOR PLAN ALT 6

Job No. 3055-0000

Sheet No. LV2.01A6

Date 08/07/2024

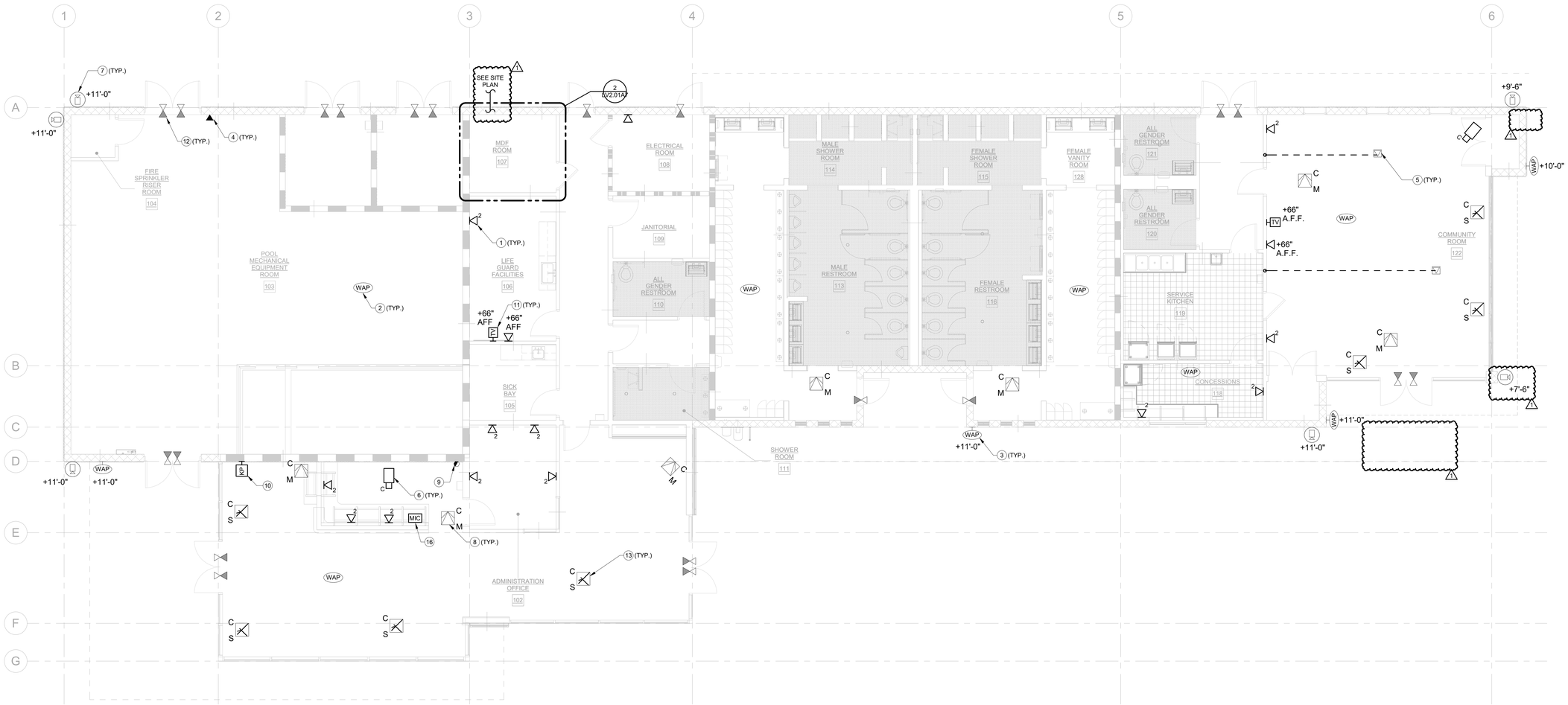

LOW VOLTAGE COMMUNITY BUILDING FLOOR PLAN ALT 7

SCALE: 3/16" = 1'-0"

1 LV2.01A7

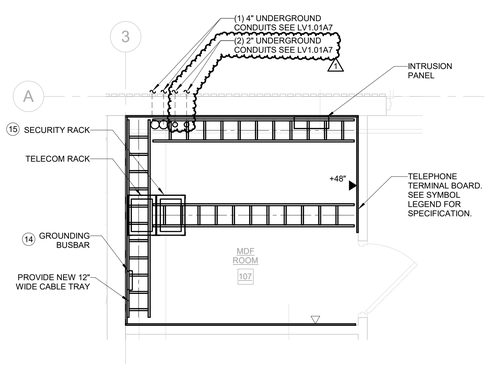

MDF ROOM ENLARGE PLAN

SCALE: 3/8" = 1'-0"

2 LV2.01A7

GENERAL NOTES

1. CONTRACTOR TO COORDINATE WITH A/V CONSULTANT FOR PROVIDING ANY LOW VOLTAGE CABLING TO THE A/V SYSTEM TO BE INSTALLED.
2. CONTRACTOR TO PROVIDE COMPLETE SYSTEMS PER SPECIFICATIONS AS REQUIRED BY THE CITY OF RIDGECREST,
3. PLANS PROVIDED ARE DIAGRAMATIC ONLY, CONTRACTOR SHALL BE RESPONSIBLE FOR COORDINATING AND PROVIDING FINAL DEVICE AND EQUIPMENT LOCATIONS PER THE CITY OF RIDGECREST REQUIREMENTS WEATHER OR NOT SHOWN ON PLANS.
4. CONTRACTOR TO PROVIDE SHOP DRAWINGS AS REQUIRED FOR APPROVAL PRIOR TO START OF WORK. WHERE CONTRACTOR PLANS ARE NOT PREVIOUSLY APPROVED IT SHALL BE AT OWNERS DISCRETION TO PROVIDE DEVIATIONS WHERE CONTRACTOR WILL PROVIDE AT NO ADDITIONAL COST.

KEYNOTES

1. PROVIDE NEW WALL MOUNTED DATA OUTLET. PROVIDE AND INSTALL OUTLET IN A 5S BACKBOX WITH A SINGLE-GANG PLASTER RING. INSTALL A (1) 1" EMT CONDUIT FROM BACKBOX UP TO ACCESSIBLE CEILING SPACE WITH CAT6A CABLES, THEN RUN CAT6A CABLES IN ACCESSIBLE CEILING SPACE USING J-HOOKS AND THEN TERMINATE AT IDF RACK SERVING THIS AREA. PROVIDE FACEPLATES AND RJ45 JACKS FOR DATA. PROVIDE REMOVABLE BLANK INSERTS FOR UNUSED PORTS. PROVIDE ALL TERMINATION FOR A COMPLETE WORKING SYSTEM.
2. PROVIDE NEW WIRELESS ACCESS POINT, CEILING MOUNT. PROVIDE DATA OUTLET FOR WIRELESS ACCESS POINT, 2-PORT PLENUM RATED SURFACE MOUNT BOX ABOVE CEILING AS INDICATED ON DRAWINGS. USE J-HOOKS TO SUPPORT NEW CABLING ABOVE ACCESSIBLE CEILING SPACE. FOR INACCESSIBLE CEILINGS SPACES NEW CONDUITS SHALL BE PROVIDED ABOVE CEILING TO THE NEAREST TELECOM ROOM. PROVIDE 20' SLACK CABLE COILS ABOVE CEILING AT OUTLET LOCATION FOR FUTURE RELOCATION.
3. PROVIDE NEW OUTDOOR WALL MOUNTED WIRELESS ACCESS POINT PER PLANS AND SPECIFICATION. CONTRACTOR TO PROVIDE COMPLETE SYSTEM AS REQUIRED INCLUDING NEW (2) CAT-6 CABLING AND CONNECTIONS TO THE MDF ROOM IN COMMUNITY BUILDING PER SPECIFICATIONS. NO EXPOSED CABLING IS ALLOWED.
4. PROVIDE NEW PHONE OUTLET, SEE SYMBOL LEGEND FOR INSTALLATION REQUIREMENTS.
5. PROVIDE NEW (2) FLOOR DATA PORTS, CABLING AND FACEPLATE AS REQUIRED FOR FOR A/V INPUTS. CONTRACTOR SHALL BE RESPONSIBLE TO COORDINATE WITH ELECTRICAL TO PROVIDE FLOOR BOX AND CONDUIT TO NEAREST WALL THEN UP TO CEILING SPACE FOR RUNNING FUTURE CABLING. CONDUIT MUST HAVE PULL STRING AS REQUIRED.
6. PROVIDE NEW CEILING MOUNT IP CAMERA PER PLANS AND SPECIFICATION. CONTRACTOR TO PROVIDE COMPLETE SYSTEM AS REQUIRED INCLUDING CAT-6 CABLING AND CONNECTIONS TO THE CCTV SERVERS AND EQUIPMENT PER SPECIFICATIONS. PROVIDE MIN. 3/4" CONDUIT AS REQUIRED, NO EXPOSED CABLING SHALL BE PERMITTED.

KEYNOTES

7. PROVIDE NEW WALL MOUNT IP CAMERA, CAMERA MUST HAVE 270 DEGREE VIEWING ANGLE. PROVIDE PER PLANS AND SPECIFICATION. CONTRACTOR TO PROVIDE COMPLETE SYSTEM AS REQUIRED INCLUDING CAT-6 CABLING AND CONNECTIONS TO THE CCTV SERVERS AND EQUIPMENT PER SPECIFICATIONS. PROVIDE NEW MIN. 3/4" CONDUIT AS REQUIRED, NO EXPOSED CABLING SHALL BE PERMITTED.
8. PROVIDE NEW INTRUSION MOTION DETECTORS WITH CABLING TO MDF LOCATED AT MAIN BUILDING PER PLANS AND SPECIFICATIONS. CONTRACTOR SHALL BE RESPONSIBLE TO PROVIDE COMPLETE CONNECTIONS AND TERMINATION AS REQUIRED.
9. PROVIDE INTRUSION SECURITY SIREN AT 8'-0" A.F.F. CONTRACTOR MUST COORDINATE WITH ARCHITECTURE/FACILITIES FOR FINAL LOCATION AS REQUIRED. CONTRACTOR SHALL BE RESPONSIBLE TO PROVIDE COMPLETE CONNECTIONS AND TERMINATION AS REQUIRED.
10. PROVIDE NEW KEYPAD FOR INTRUSION ALARM SYSTEM WITH CABLING TO MDF LOCATED AT MAIN BUILDING PER PLANS AND SPECIFICATIONS. CONTRACTOR SHALL BE RESPONSIBLE TO PROVIDE COMPLETE CONNECTIONS AND TERMINATION AS REQUIRED.
11. PROVIDE AND INSTALL 4S BOX (DEEP TYPE) WITH 2 GANG RING FOR TV OUTLET. PROVIDE 1-1/4" CONDUIT STUB UP TO 6" ABOVE ACCESSIBLE CEILING SPACE. PROVIDE AND INSTALL (1) CAT6 DATA CABLE .CONTRACTOR SHALL BE RESPONSIBLE TO PROVIDE COMPLETE CONNECTIONS AND TERMINATION AS REQUIRED.
12. PROVIDE NEW DOOR CONTACTS WITH NEW 3/4" EMT FLEX ON SECURE SIDE TO ACCESSIBLE CEILING SPACE WITH PULL STRING FOR COMPLETE CONNECTION.
13. ELECTRICAL CONTRACTOR TO PROVIDE NEW MIN 3/4" CONDUIT HOME RUN TO IDF FOR NEW GLASS BREAK SENSOR CONNECTIONS AND TERMINATIONS. WHERE DEVICE IS ON HARD LID CEILINGS, PROVIDE 4S BOX (DEEP TYPE) WITH SINGLE GANG RING FLUSH MOUNT. WHERE GLASS BREAKS ARE WALL MOUNTED, 4S BOX SHALL BE SURFACE MOUNTED. CONDUIT SHALL BE STUBBED UP TO ABOVE CEILING SPACE THEN HOME RUN TO MDF.
14. PROVIDE GROUND BUSBAR WITH MIN. #2/0 AWG INSULATED GROUND CABLE AND CONDUIT BONDED TO MAIN BUILDING GROUND SYSTEM. ALL EQUIPMENT INCLUDING RACKS, CABLE TRAY, ETC. MUST BE PROVIDED WITH MIN. #6 (SOLID) AWG COPPER GROUND WIRE AS REQUIRED.
15. CONTRACTOR TO PROVIDE AV EQUIPMENT TO BE MOUNTED AT SECUTIY RACK IN ORDER TO MINIMIZE AV SPACE ALLOCATION. CONTRACTOR SHALL BE REESPONSIBLE FOR ALL CABLING AN CONNECTIONS TO AV PER PLANS (SEE SHEET LV5.05) AS PART OF HIS SCOPE NO EXCEPTIONS TAKEN.
16. PROVIDE MICROPHONE AND CABLING BACK TO AV SYSTEM AS REQUIRED PER AV. CONTRACOR MUST COORDINATE WITH CITY FOR FINAL LOCATION AS TO AVOID FUTURE CHANGES, NO EXCEPTIONS WILL BE TAKEN.

AGENCY

FLEWELLING & MOODY
architecture planning interiors

HEADQUARTERS OFFICE:
99 S. Lake Avenue, Suite 300
Pasadena, CA 91101
Phone: 323.543.8300
E-Mail: fm-pasadena@flewelling-moody.com

ANTELOPE VALLEY OFFICE:
1035 West Lancaster Boulevard
Lancaster, California 93534
Phone: 661.949.0771
E-Mail: fm-lancaster@flewelling-moody.com

An Employee Owned Corporation

ARCHITECT

CONSULTANT

Budlong
An MBE|SBE|DBE|LSBE Firm
Glendale|Downtown LA|Fremont|Camarillo
W W W . B U D L O N G . C O M
Job No. 23-140

REGISTERED PROFESSIONAL ENGINEER SHAUN N. CHRISTIAN No. E 22864 ELECTRICAL STATE OF CA

Drawn by: Author

Check by: Checker

Revisions

No.	Date	Description
	01/26/24	100% DD
	03/01/24	50% CD
	05/09/24	90% CD
	08/05/24	100% CD
	11/25/24	100% CD V2
	01/31/25	100% CD V3
1	08/27/2025	BID ALTERNATE

All dimensions must be checked at the job by the contractor who accepts full responsibility for their accuracy under the contract. These plans & the specifications in connection therewith have been prepared for a specific site. Any and all responsibility for their use in whole or in part on any other site is hereby disclaimed by Flewelling & Moody.

CITY OF RIDGECREST

SGT. JOHN PINNEY MEMORIAL POOL REPLACEMENT

205 S WARNER ST, RIDGECREST, CA 93555

Drawing Title

LOW VOLTAGE COMMUNITY BUILDING FLOOR PLAN ALT 7

Job No. 3055-0000

Sheet No. LV2.01A7

Date 08/07/2024

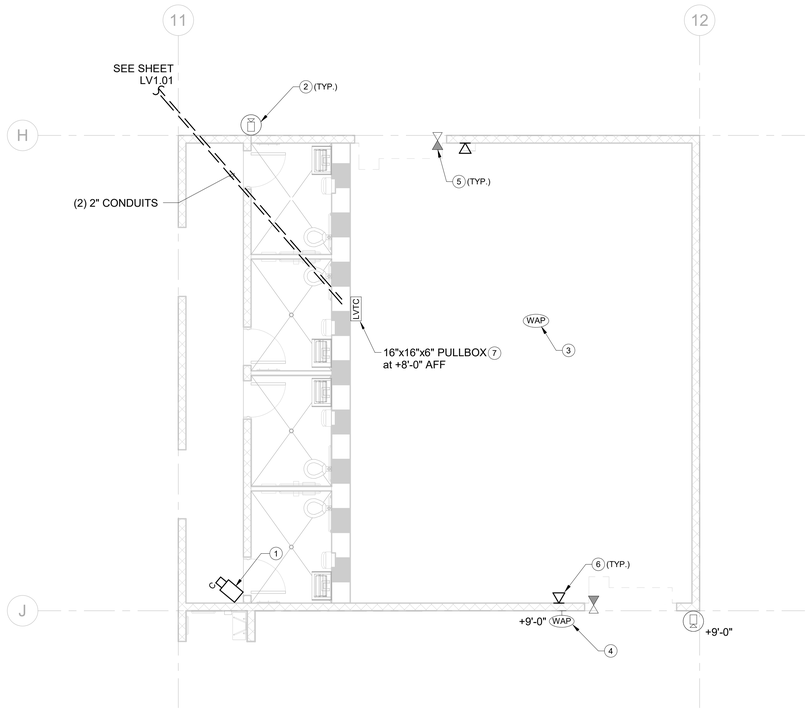

LOW VOLTAGE EQUIPMENT STORAGE FLOOR PLAN

SCALE: 3/16" = 1'-0"

1 / LV2.02

N

GENERAL NOTES

1. CONTRACTOR TO COORDINATE WITH A/V CONSULTANT FOR PROVIDING ANY LOW VOLTAGE CABLING TO THE A/V SYSTEM TO BE INSTALLED.
2. CONTRACTOR TO PROVIDE COMPLETE SYSTEMS PER SPECIFICATIONS AS REQUIRED BY THE CITY OF RIDGECREST.
3. PLANS PROVIDED ARE DIAGRAMATIC ONLY, CONTRACTOR SHALL BE RESPONSIBLE FOR COORDINATING AND PROVIDING FINAL DEVICE AND EQUIPMENT LOCATIONS PER THE CITY OF RIDGECREST REQUIREMENTS WEATHER OR NOT SHOWN ON PLANS.
4. CONTRACTOR TO PROVIDE SHOP DRAWINGS AS REQUIRED FOR APPROVAL PRIOR TO START OF WORK. WHERE CONTRACTOR PLANS ARE NOT PREVIOUSLY APPROVED IT SHALL BE AT OWNERS DISCRETION TO PROVIDE DEVIATIONS WHERE CONTRACTOR WILL PROVIDE AT NO ADDITIONAL COST.

KEYNOTES

1. PROVIDE NEW CEILING MOUNTED IP CAMERA PER PLANS AND SPECIFICATION. CONTRACTOR TO PROVIDE COMPLETE SYSTEM AS REQUIRED INCLUDING CAT-6 CABLING AND CONNECTIONS TO THE CCTV SERVERS AND EQUIPMENT PER SPECIFICATIONS LOCATED AT MAIN BUILDING. PROVIDE MIN. 3/4" CONDUIT AS REQUIRED, NO EXPOSED CABLING SHALL BE PERMITTED.
2. PROVIDE NEW WALL MOUNT IP CAMERA, CAMERA MUST HAVE 270 DEGREE VIEWING ANGLE. PROVIDE PER PLANS AND SPECIFICATION. CONTRACTOR TO PROVIDE COMPLETE SYSTEM AS REQUIRED INCLUDING CAT-6 CABLING AND CONNECTIONS TO THE CCTV SERVERS AND EQUIPMENT PER SPECIFICATIONS LOCATED AT MAIN BUILDING. PROVIDE NEW MIN. 3/4" CONDUIT AS REQUIRED, NO EXPOSED CABLING SHALL BE PERMITTED.
3. PROVIDE NEW CEILING MOUNTED WIRELESS ACCESS POINT WITH CAT-6 CABLING TO MDF LOCATED AT MAIN BUILDING PER PLANS AND SPECIFICATIONS. CONTRACTOR SHALL BE RESPONSIBLE TO PROVIDE COMPLETE CONNECTIONS AND TERMINATION AS REQUIRED.
4. PROVIDE NEW OUTDOOR WALL MOUNTED WIRELESS ACCESS POINT PER PLANS AND SPECIFICATION. CONTRACTOR TO PROVIDE COMPLETE SYSTEM AS REQUIRED INCLUDING CAT-6 CABLING AND CONNECTIONS TO THE CCTV SERVERS AND EQUIPMENT PER SPECIFICATIONS LOCATED AT MAIN BUILDING. PROVIDE MIN. 1" CONDUIT AS REQUIRED, NO EXPOSED CABLING SHALL BE PERMITTED.
5. PROVIDE NEW DOOR CONTACTS WITH NEW 3/4" EMT FLEX ON SECURE SIDE TO CEILING WITH PULL STRING FOR COMPLETE CONNECTION.
6. PROVIDE NEW DATA OUTLET WITH CAT-6 CABLING TO MDF LOCATED AT MAIN BUILDING PER PLANS AND SPECIFICATIONS. CONTRACTOR SHALL BE RESPONSIBLE TO PROVIDE COMPLETE CONNECTIONS AND TERMINATION AS REQUIRED.
7. PROVIDE NEW PULL BOX FOR RUNNING NEW TELECOM/WIFI CAT6 CABLING,INTRUSION CABLING AND CAT6 CAMERAS CABLING TO MDF LOCATED AT MAIN BUILDING. CONTRACTOR SHALL BE RESPONSIBLE TO PROVIDE COMPLETE CONDUIT CONNECTIONS AND TERMINATION AS REQUIRED.

AGENCY

FLEWELLING & MOODY
architecture planning interiors

HEADQUARTERS OFFICE:
99 S. Lake Avenue, Suite 300
Pasadena, CA 91101
Phone: 323.543.8300
E-Mail: fm-pasadena@flewelling-moody.com

ANTELOPE VALLEY OFFICE:
1035 West Lancaster Boulevard
Lancaster, California 93534
Phone: 661.949.0771
E-Mail: fm-lancaster@flewelling-moody.com

An Employee Owned Corporation

ARCHITECT

CONSULTANT

Budlong
An MBE|SBE|DBE|LSBE Firm
Glendale|Downtown LA|Fremont|Camarillo
W W W . B U D L O N G . C O M
Job No. 23-140

REGISTERED PROFESSIONAL ENGINEER
MALIA N. CHRISTIAN
No. E 22864
ELECTRICAL
STATE OF CALIFORNIA

Drawn by: Author

Check by: Checker

Revisions

No.	Date	Description
	01/26/24	100% DD
	03/01/24	50% CD
	05/09/24	90% CD
	08/05/24	100% CD
	11/25/24	100% CD V2
	01/31/25	100% CD V3
1	6/9/25	BID ALTERNATE

All dimensions must be checked at the job by the contractor who accepts full responsibility for their accuracy under the contract. These plans & the specifications in connection therewith have been prepared for a specific site. Any and all responsibility for their use in whole or in part on any other site is hereby disclaimed by Flewelling & Moody.

CITY OF RIDGECREST

SGT. JOHN PINNEY MEMORIAL POOL REPLACEMENT

205 S WARNER ST, RIDGECREST, CA 93555

Drawing Title

LOW VOLTAGE EQUIPMENT STORAGE FLOOR PLAN

Job No. 3055-0000

Date 08/07/2024

Sheet No. **LV2.02**

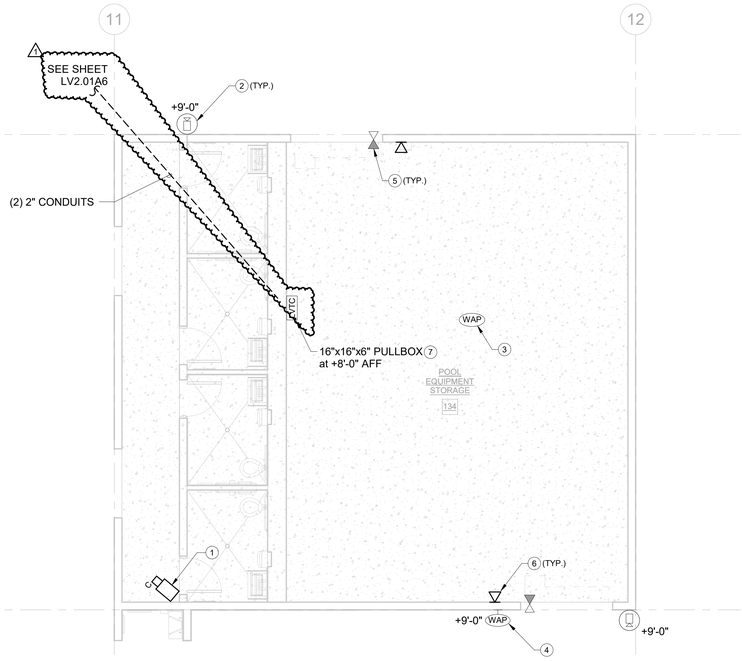

LOW VOLTAGE EQUIPMENT STORAGE FLOOR PLAN ALT 6

SCALE: 3/16" = 1'-0"

1 LV2.02A6

N

GENERAL NOTES

1. CONTRACTOR TO COORDINATE WITH A/V CONSULTANT FOR PROVIDING ANY LOW VOLTAGE CABLING TO THE A/V SYSTEM TO BE INSTALLED.
2. CONTRACTOR TO PROVIDE COMPLETE SYSTEMS PER SPECIFICATIONS AS REQUIRED BY THE CITY OF RIDGECREST. .
3. PLANS PROVIDED ARE DIAGRAMATIC ONLY, CONTRACTOR SHALL BE RESPONSIBLE FOR COORDINATING AND PROVIDING FINAL DEVICE AND EQUIPMENT LOCATIONS PER THE CITY OF RIDGECREST REQUIREMENTS WEATHER OR NOT SHOWN ON PLANS.
4. CONTRACTOR TO PROVIDE SHOP DRAWINGS AS REQUIRED FOR APPROVAL PRIOR TO START OF WORK. WHERE CONTRACTOR PLANS ARE NOT PREVIOUSLY APPROVED IT SHALL BE AT OWNERS DISCRETION TO PROVIDE DEVIATIONS WHERE CONTRACTOR WILL PROVIDE AT NO ADDITIONAL COST.

KEYNOTES

1. PROVIDE NEW CEILING MOUNTED IP CAMERA PER PLANS AND SPECIFICATION. CONTRACTOR TO PROVIDE COMPLETE SYSTEM AS REQUIRED INCLUDING CAT-6 CABLING AND CONNECTIONS TO THE CCTV SERVERS AND EQUIPMENT PER SPECIFICATIONS LOCATED AT MAIN BUILDING. PROVIDE MIN. 3/4" CONDUIT AS REQUIRED, NO EXPOSED CABLING SHALL BE PERMITTED.
2. PROVIDE NEW WALL MOUNT IP CAMERA, CAMERA MUST HAVE 270 DEGREE VIEWING ANGLE. PROVIDE PER PLANS AND SPECIFICATION. CONTRACTOR TO PROVIDE COMPLETE SYSTEM AS REQUIRED INCLUDING CAT-6 CABLING AND CONNECTIONS TO THE CCTV SERVERS AND EQUIPMENT PER SPECIFICATIONS LOCATED AT MAIN BUILDING. PROVIDE NEW MIN. 3/4" CONDUIT AS REQUIRED, NO EXPOSED CABLING SHALL BE PERMITTED.
3. PROVIDE NEW CEILING MOUNTED WIRELESS ACCESS POINT WITH CAT-6 CABLING TO MDF LOCATED AT MAIN BUILDING PER PLANS AND SPECIFICATIONS. CONTRACTOR SHALL BE RESPONSIBLE TO PROVIDE COMPLETE CONNECTIONS AND TERMINATION AS REQUIRED.
4. PROVIDE NEW OUTDOOR WALL MOUNTED WIRELESS ACCESS POINT PER PLANS AND SPECIFICATION. CONTRACTOR TO PROVIDE COMPLETE SYSTEM AS REQUIRED INCLUDING CAT-6 CABLING AND CONNECTIONS TO THE CCTV SERVERS AND EQUIPMENT PER SPECIFICATIONS LOCATED AT MAIN BUILDING. PROVIDE MIN. 1" CONDUIT AS REQUIRED, NO EXPOSED CABLING SHALL BE PERMITTED.
5. PROVIDE NEW DOOR CONTACTS WITH NEW 3/4" EMT FLEX ON SECURE SIDE TO CEILING WITH PULL STRING FOR COMPLETE CONNECTION.
6. PROVIDE NEW DATA OUTLET WITH CAT-6 CABLING TO MDF LOCATED AT MAIN BUILDING PER PLANS AND SPECIFICATIONS. CONTRACTOR SHALL BE RESPONSIBLE TO PROVIDE COMPLETE CONNECTIONS AND TERMINATION AS REQUIRED.
7. PROVIDE NEW PULL BOX FOR RUNNING NEW TELECOM/WIFI CAT6 CABLING,INTRUSION CABLING AND CAT6 CAMERAS CABLING TO MDF LOCATED AT MAIN BUILDING. CONTRACTOR SHALL BE RESPONSIBLE TO PROVIDE COMPLETE CONDUIT CONNECTIONS AND TERMINATION AS REQUIRED.

AGENCY

FLEWELLING & MOODY
architecture planning interiors

HEADQUARTERS OFFICE:
99 S. Lake Avenue, Suite 300
Pasadena, CA 91101
Phone: 323.543.8300
E-Mail: fm-pasadena@flewelling-moody.com

ANTELOPE VALLEY OFFICE:
1035 West Lancaster Boulevard
Lancaster, California 93534
Phone: 661.949.0771
E-Mail: fm-lancaster@flewelling-moody.com

An Employee Owned Corporation

ARCHITECT

CONSULTANT

Budlong
An MBE|SBE|DBE|LSBE Firm
Glendale|Downtown LA|Fremont|Camarillo
W W W . B U D L O N G . C O M
Job No. 23-140

REGISTERED PROFESSIONAL ENGINEER
MAILAN N. CHRISTIAN
No. E 22864
ELECTRICAL
STATE OF CALIFORNIA

Drawn by: Author

Check by: Checker

Revisions

No.	Date	Description
	01/26/24	100% DD
	03/01/24	50% CD
	05/09/24	90% CD
	08/05/24	100% CD
	11/25/24	100% CD V2
	01/31/25	100% CD V3
1	08/27/2025	BID ALTERNATE

All dimensions must be checked at the job by the contractor who accepts full responsibility for their accuracy under the contract. These plans & the specifications in connection therewith have been prepared for a specific site. Any and all responsibility for their use in whole or in part on any other site is hereby disclaimed by Flewelling & Moody.

CITY OF RIDGECREST

SGT. JOHN PINNEY MEMORIAL POOL REPLACEMENT

205 S WARNER ST, RIDGECREST, CA 93555

Drawing Title

LOW VOLTAGE EQUIPMENT STORAGE FLOOR PLAN ALT 6

Job No. 3055-0000

Sheet No. **LV2.02A6**

Date 08/07/2024

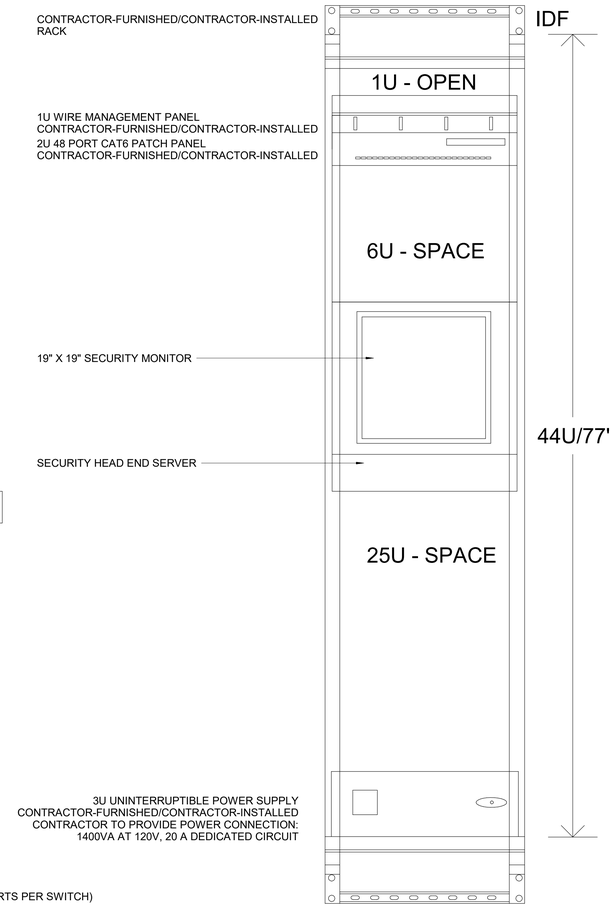

MAXIMUM 120 CAT. 6 DROPS PER 84" IDF
(SIX DATA SWITCHES WITH 4 UNUSED PORTS PER SWITCH)

RACK CONTAINS MIN. 50% EXPANSION SPACE
(THREE MORE FUTURE SWITCHES FOR ULTIMATE CAPACITY OF 216 CAT. 6 DROPS)
FIBER OPTIC CABLE HOMERUN SHALL CONTAIN MIN. 18 MM+6 SM FIBERS WITHOUT ANY IDF
CALCULATE NUMBER OF MM FIBERS (PLUS 6 SM) FOR IDF, ALLOWING 2MM FIBERS EACH INSTALLED SWITCH AND 2MM FIBERS PER EACH LDF'S
SWITCH PLUS 50% SPARE MM FIBERS. FOR THE RACK SHOWN, WITH ONE LDF CONTAINING UP TO 2 SWITCHES, THE HOMERUN SHALL BE 24MM+6MM.

SECURITY RACK ELEVATION

SCALE:N.T.S

2 / LV5.01

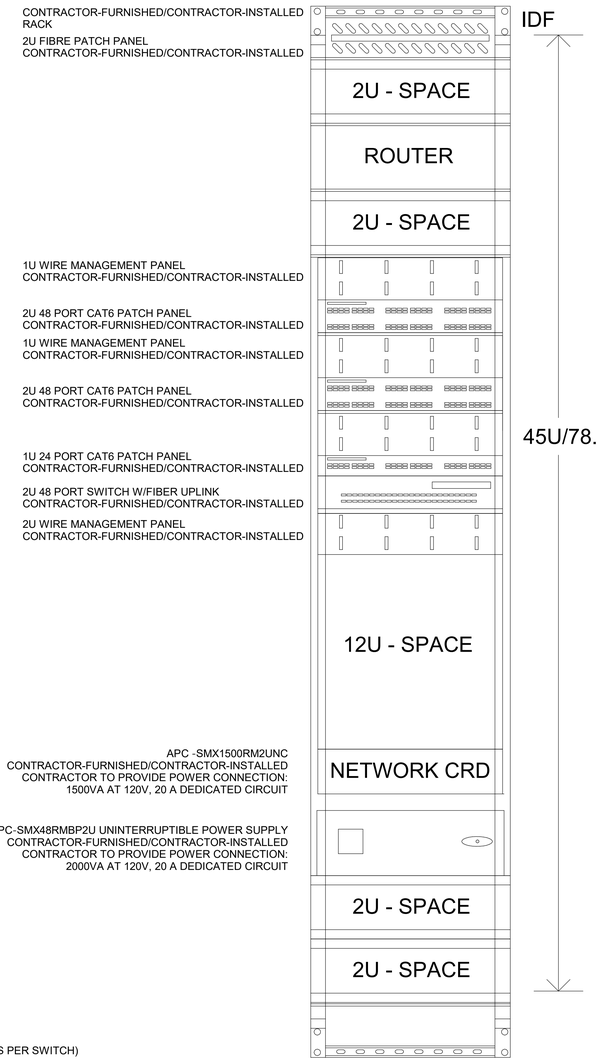

MAXIMUM 120 CAT. 6 DROPS PER 84" IDF
(SIX DATA SWITCHES WITH 4 UNUSED PORTS PER SWITCH)

RACK CONTAINS MIN. 50% EXPANSION SPACE
(THREE MORE FUTURE SWITCHES FOR ULTIMATE CAPACITY OF 216 CAT. 6 DROPS)
FIBER OPTIC CABLE HOMERUN SHALL CONTAIN MIN. 18 MM+6 SM FIBERS WITHOUT ANY IDF
CALCULATE NUMBER OF MM FIBERS (PLUS 6 SM) FOR IDF, ALLOWING 2MM FIBERS EACH INSTALLED SWITCH AND 2MM FIBERS PER EACH LDF'S
SWITCH PLUS 50% SPARE MM FIBERS. FOR THE RACK SHOWN, WITH ONE LDF CONTAINING UP TO 2 SWITCHES, THE HOMERUN SHALL BE 24MM+6MM.

MDF RACK ELEVATION

SCALE:N.T.S

1 / LV5.01

AGENCY

FLEWELLING & MOODY
architecture planning interiors

HEADQUARTERS OFFICE:
99 S. Lake Avenue, Suite 300
Pasadena, CA 91101
Phone: 323.543.8300
E-Mail: fm-pasadena@flewelling-moody.com

ANTELOPE VALLEY OFFICE:
1035 West Lancaster Boulevard
Lancaster, California 93534
Phone: 661.949.0771
E-Mail: fm-lancaster@flewelling-moody.com

An Employee Owned Corporation

ARCHITECT

CONSULTANT

Budlong
An MBE|SBE|DBE|LSBE Firm
Glendale|Downtown LA|Fremont|Camarillo
W W W . B U D L O N G . C O M
Job No. 23-140

REGISTERED PROFESSIONAL ENGINEER
MARIAN N. CHRISTIAN
No. 22864
ELECTRICAL
STATE OF CA

Drawn by: Author

Check by: Checker

Revisions

No.	Date	Description
	01/26/24	100% DD
	03/01/24	50% CD
	05/09/24	90% CD
	08/05/24	100% CD
	11/25/24	100% CD V2
	01/31/25	100% CD V3
1	6/9/25	BID ALTERNATE

All dimensions must be checked at the job by the contractor who accepts full responsibility for their accuracy under the contract. These plans & the specifications in connection therewith have been prepared for a specific site. Any and all responsibility for their use in whole or in part on any other site is hereby disclaimed by Flewelling & Moody.

CITY OF RIDGECREST

SGT. JOHN PINNEY MEMORIAL POOL REPLACEMENT

205 S WARNER ST, RIDGECREST, CA 93555

Drawing Title

LOW VOLTAGE RACK ELEVATION DETAILS

Job No. 3055-0000

Date 08/07/2024

Sheet No. **LV5.01**

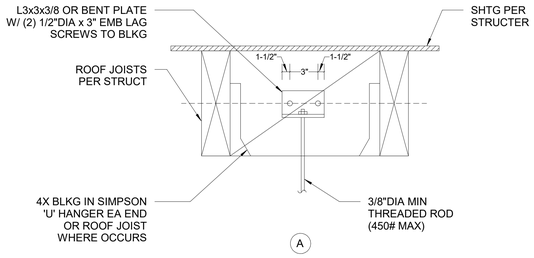

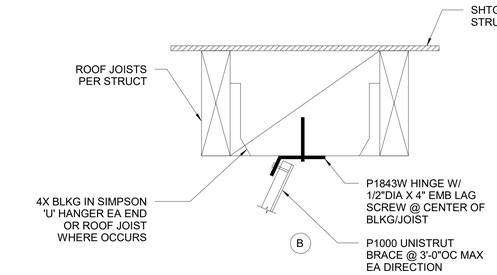

TYPICAL CABLE TRAY DETAIL

SCALE:N.T.S

1 LV5.02

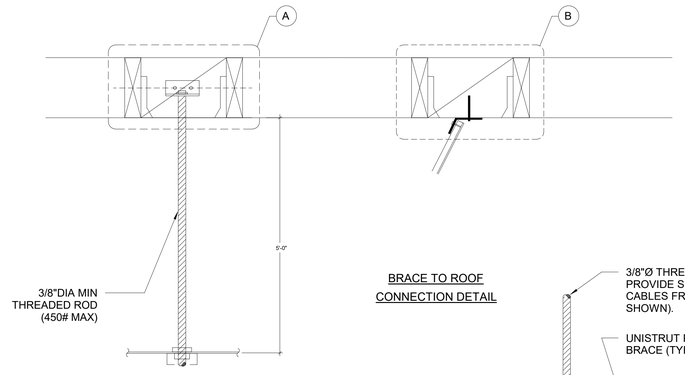

CEILING MOUNTED CABLE TRAY SUPPORT DETAIL

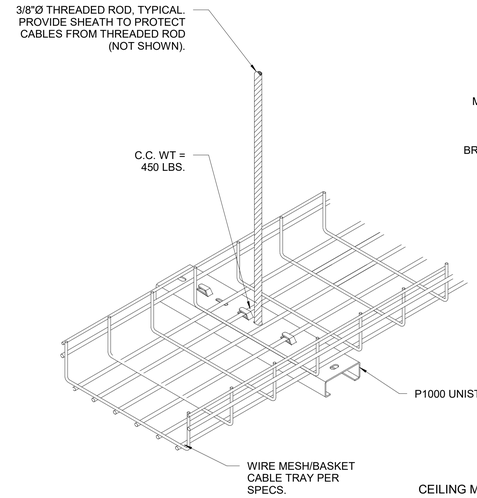

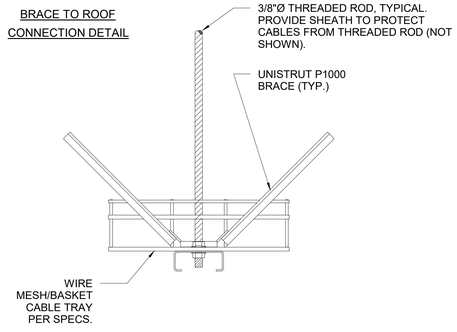

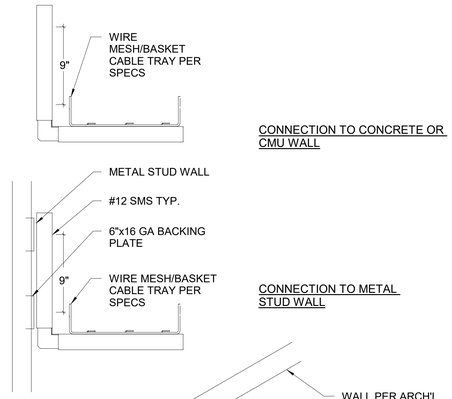

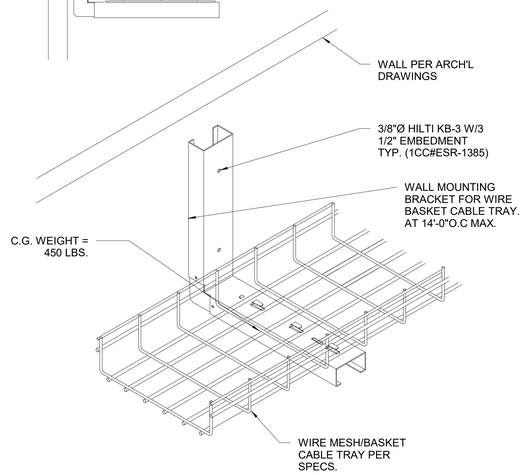

CABLE TRAY WALL MOUNTING DETAIL

NOTES:

1. SUPPORT CLIPS MUST SPECIFICALLY BE DESIGNED AND RATED FOR USE IN CATEGORY 6 CABLE INSTALLATION.
2. INSTALL APPROPRIATE SIZE AND QUANTITY SUPPORT CLIPS FOR CABLES TO BE SUPPORTED + 30 PERCENT EXPANSION.
3. USE MANUFACTURERS RECOMMENDED MOUNTING HARDWARE, APPROPRIATE FOR ATTACHING TO WALL OR CEILING STRUCTURES.
4. CEILING TILE TEE GRID, DROP WIRES AND HVAC EQUIPMENT SHALL NOT BE USED AS MOUNTING POINTS.
5. SECURE CABLE IN SUPPORT CLIPS AS PER MANUFACTURES RECOMMENDATION FOR CAT-6 CABLE. DO NOT EXCEED INDICATION FILL RATIO.
6. CABLE SUPPORT CLIPS SHALL BE SPACED A MAXIMUM OF 5' APART.
7. SUPPORT CLIPS TO BE PROVIDED IN AREAS WHERE QUANTITIES OF CABLE ARE INSUFFICIENT TO REQUIRE CABLE TRAY.
8. INSTALL TRIANGULAR METAL BRACKETS (NOT SHOWN) FOR HIGH STATION CABLE CAPACITY REQUIREMENTS.
9. TOTAL CABLE WEIGHT IS LESS THAN 1LB PER LINEAR FEET.

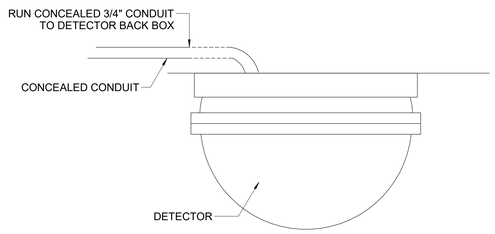

NOTES:-

1. ALL SCREWS AND FASTNERS USED IN SECURITY SYSTEM DEVICES SHALL BE TAMPER PROOF.
2. ALL DETECTORS SHALL BE INTERNALLY ADJUSTED FOR OPTIMUM VERTICAL AND HORIZONTAL SECURITY COVERAGE, TAKING CARE TO AVOID WATER OR VAPORS, SUNLIGHT AND WARM AIR TUEBULANCE ETC., AND TO THE SATISFACTION OF THE DISTRICT INSPECTOR.
3. ALL DETECTORS SYSTEM CABLES SHALL RUN IN CONCEALED CONDUIT AS SHOWN ON THE PLANS.
4. LOCATE AND ADJUST THE DETECTOR ACCORDING TO THE FURNITURE LAYOUT. VERIFY FINAL LAYOUT PRIOR TO INSTALLATION.
5. PROVIDE ALL SHELVES, INSERTS, CORE DRILLINGS AND OPENINGS NECESSARY FOR THE INSTALLATION OF SECURITY SYSTEM.

SECURITY MOTION DETECTOR MOUNTING DETAIL

SCALE:N.T.S

2 LV5.02

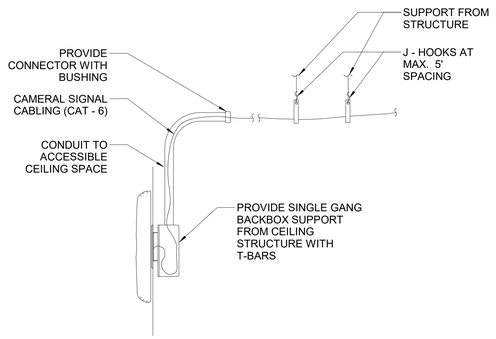

WALL MOUNTED WIRELESS ACCESS POINT

SCALE: 12" = 1'-0"

3 LV5.02

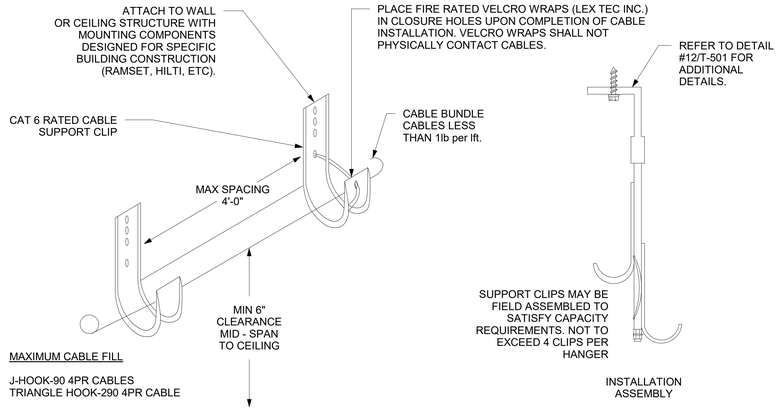

J - HOOK CABLE SUPPORT

SCALE:N.T.S

4 LV5.02

AGENCY

FLEWELLING & MOODY
architecture planning interiors

HEADQUARTERS OFFICE:
99 S. Lake Avenue, Suite 300
Pasadena, CA 91101
Phone: 323.543.8300
E-Mail: fm-pasadena@flewelling-moody.com

ANTELOPE VALLEY OFFICE:
1035 West Lancaster Boulevard
Lancaster, California 93534
Phone: 661.949.0771
E-Mail: fm-lancaster@flewelling-moody.com

An Employee Owned Corporation

ARCHITECT

CONSULTANT

Budlong
An MBE|SBE|DBE|LSBE Firm
Glendale|Downtown LA|Fremont|Camarillo
W W W . B U D L O N G . C O M
Job No. 23-140

REGISTERED PROFESSIONAL ENGINEER MARIAN N. CHRISTIAN C 22864 CIVIL STATE OF CALIFORNIA

Drawn by: Author

Check by: Checker

Revisions

No.	Date	Description
	01/26/24	100% DD
	03/01/24	50% CD
	05/09/24	90% CD
	08/05/24	100% CD
	11/25/24	100% CD V2
	01/31/25	100% CD V3
1	6/9/25	BID ALTERNATE

All dimensions must be checked at the job by the contractor who accepts full responsibility for their accuracy under the contract. These plans & the specifications in connection therewith have been prepared for a specific site. Any and all responsibility for their use in whole or in part on any other site is hereby disclaimed by Flewelling & Moody.

CITY OF RIDGECREST

SGT. JOHN PINNEY MEMORIAL POOL REPLACEMENT

205 S WARNER ST, RIDGECREST, CA 93555

Drawing Title

LOW VOLTAGE DETAILS

Job No. 3055-0000

Date 08/07/2024

Sheet No. **LV5.02**

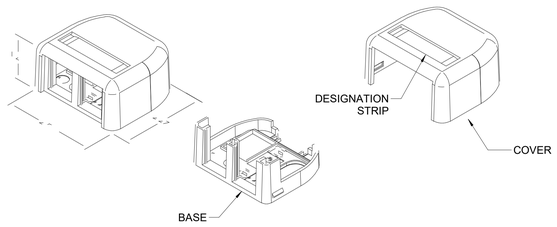

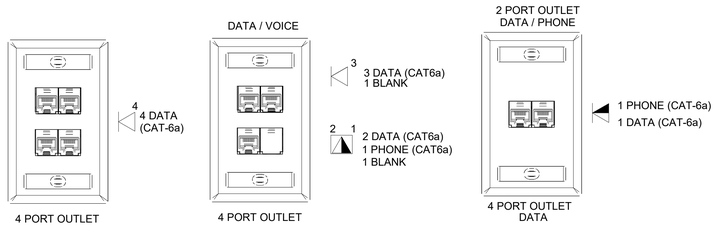

DATA AND WAP OUTLET FACE PLATE PORT CONFIGURATION DETAIL

SCALE:N.T.S

1 LV5.03

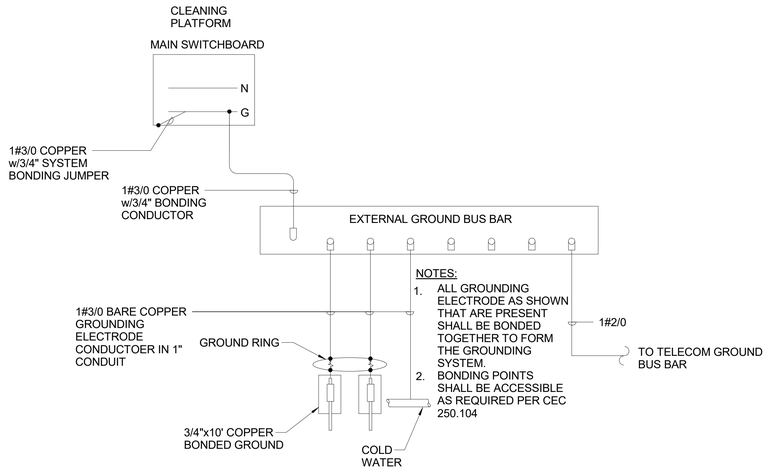

GROUND BUS BAR DETAIL

SCALE:N.T.S

2 LV5.03

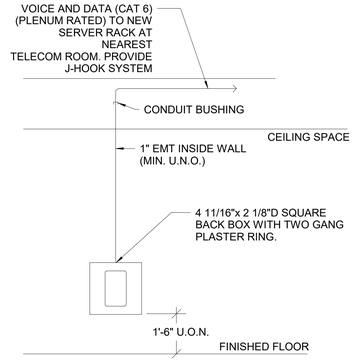

TYP. COMBINATION TELE./DATA OUTLET

SCALE:N.T.S

3 LV5.03

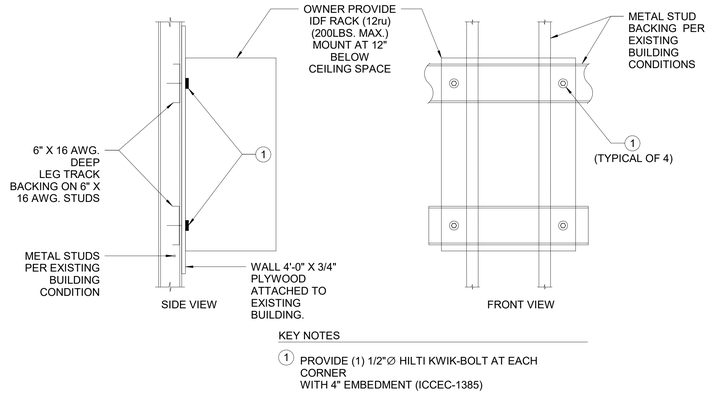

RACK MOUNTING DETAIL

SCALE:N.T.S

4 LV5.03

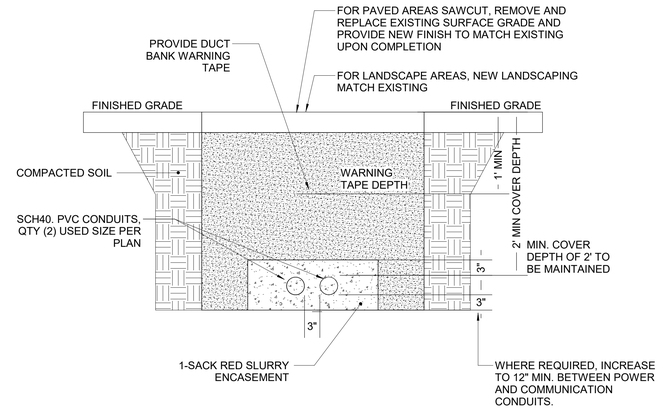

GENERAL NOTES :

1. CONTRACTOR MUST PROVIDE 12" SEPARATION FROM ANY FOREIGN WET UTILITIES INCLUDING BUT NOT LIMITED TO, WATER, SEWER, GAS
2. PROVIDE 2-4" CONDUITS IN DUCT BANK SECTION, CONDUITS MUST HAVE MIN. 2 PULL STRINGS AS REQUIRED.
3. LEVEL THE BAST PRIOR TO PLACING CONDUITS
4. CONTRACTOR SHALL SUBMIT COORDINATED CONDUIT DUCT BANK SECTIONS FOR REVIEW AND APPROVAL PRIOR TO ROUGH-IN.

TYPICAL LOW VOLTAGE DUCT BANK DETAIL

SCALE:N.T.S

5 LV5.03

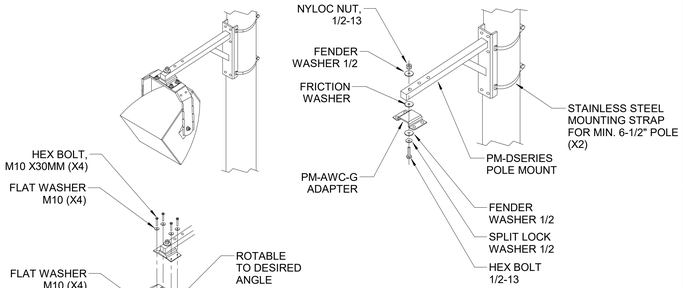

A/V SYSTEM POLE MOUNTED SPEAKER DETAIL

SCALE:N.T.S

6 LV5.03

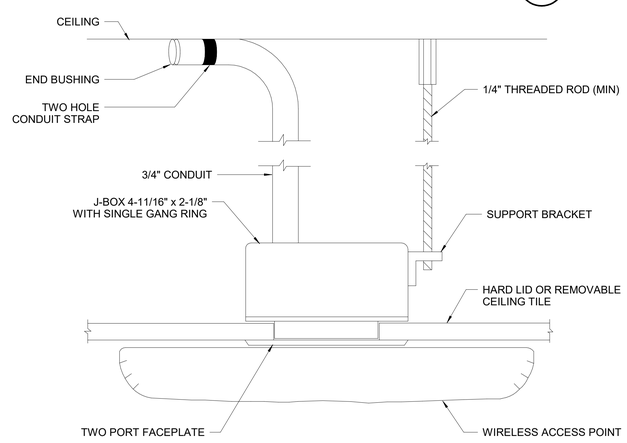

CEILING MOUNTED WIRELESS ACCESS POINT

SCALE:N.T.S

7 LV5.03

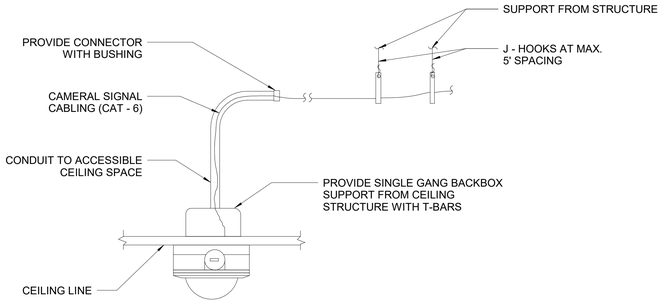

FLUSH CEILING MOUNTED MINI-DOME CAMERA

SCALE:N.T.S

8 LV5.03

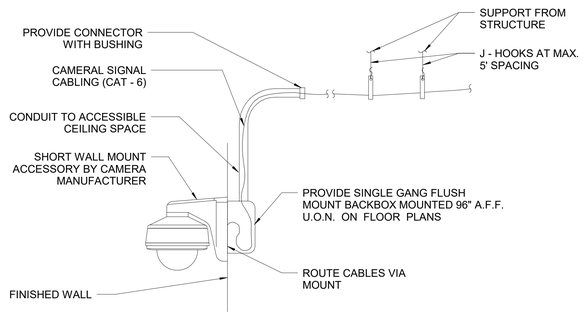

EXTERIOR FIXED CAMERA IN WALL MOUNTED HOUSING

SCALE:N.T.S

9 LV5.03

AGENCY

FLEWELLING & MOODY
architecture planning interiors

HEADQUARTERS OFFICE:
99 S. Lake Avenue, Suite 300
Pasadena, CA 91101
Phone: 323.543.8300
E-Mail: fm-pasadena@flewelling-moody.com

ANTELOPE VALLEY OFFICE:
1035 West Lancaster Boulevard
Lancaster, California 93534
Phone: 661.949.0771
E-Mail: fm-lancaster@flewelling-moody.com

An Employee Owned Corporation

ARCHITECT

CONSULTANT

Budlong
An MBE|SBE|DBE|LSBE Firm
Glendale|Downtown LA|Fremont|Camarillo
WWW.BUDLONG.COM
Job No. 23-140

REGISTERED PROFESSIONAL ENGINEER MARK H. CHRISTIAN No. 22864 CIVIL STATE OF CALIFORNIA

Drawn by: Author
Check by: Checker

Revisions

No.	Date	Description
	01/26/24	100% DD
	03/01/24	50% CD
	05/09/24	90% CD
	08/05/24	100% CD
	11/25/24	100% CD V2
	01/31/25	100% CD V3
1	6/9/25	BID ALTERNATE

All dimensions must be checked at the job by the contractor who accepts full responsibility for their accuracy under the contract. These plans & the specifications in connection therewith have been prepared for a specific site. Any and all responsibility for their use in whole or in part on any other site is hereby disclaimed by Flewelling & Moody.

CITY OF RIDGECREST

SGT. JOHN PINNEY MEMORIAL POOL REPLACEMENT

205 S WARNER ST, RIDGECREST, CA 93555

Drawing Title

LOW VOLTAGE DETAILS

Job No. 3055-0000

Sheet No. **LV5.03**

Date 08/07/2024

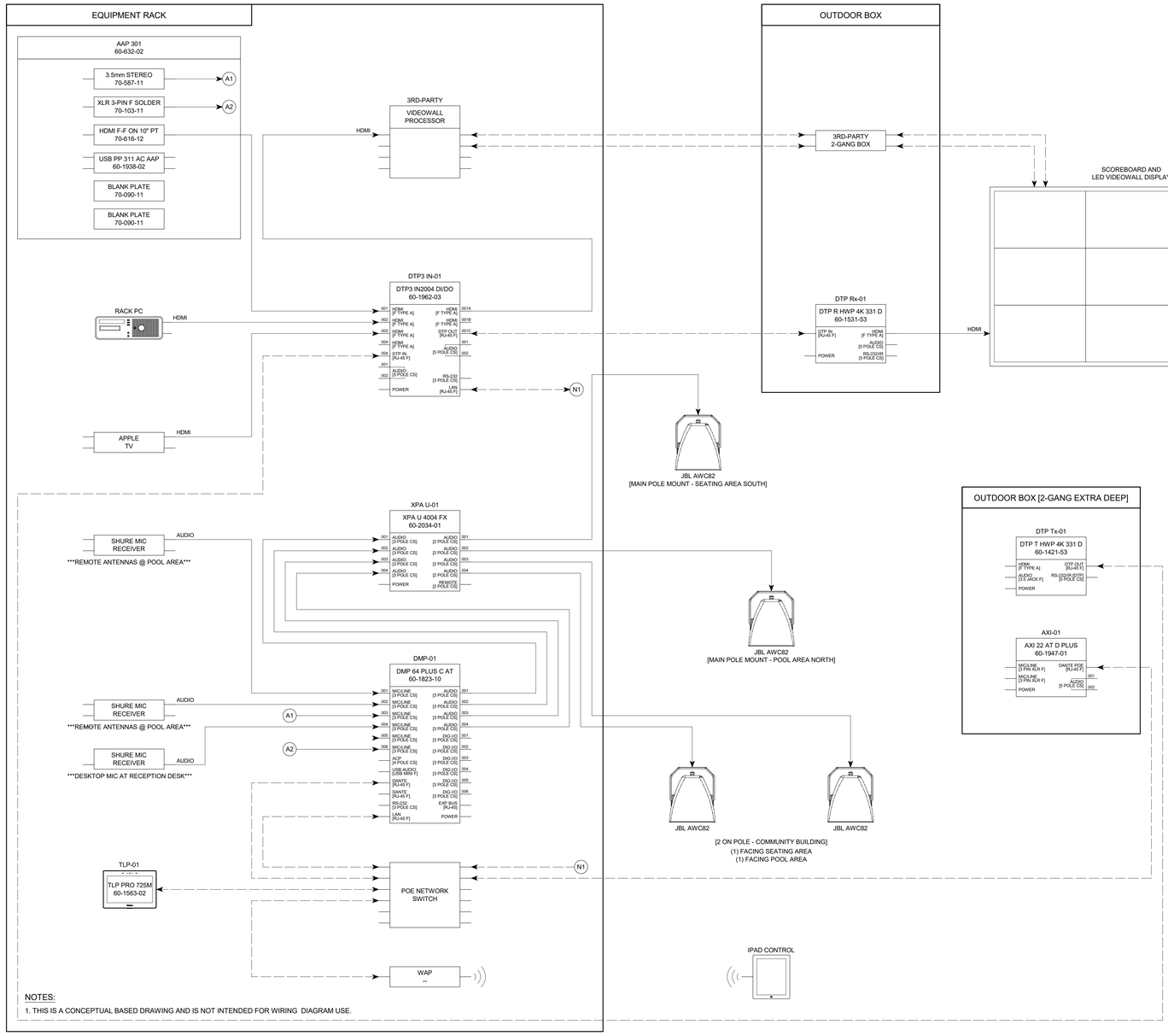

AV EQUIPMENT RACK ELEVATION

SCALE:N.T.S

1 / LV5.04

NOTE:
1. - MAIN OUTDOOR LED WALL BOX TO BE USED FOR SCOREBOARD AND VIDEO PLAYBACK (PROVIDE CONNECTION WITH 2 CAT-6 CABLES AND AN HDMI CONNECTION TO SCOREBOARD)
   NOTE: INSTALL EXTRA DEEP 2 GANG OUTDOOR RATED WALL BOX
2. - SECOND OUTDOOR WALL BOX - LOCAL INPUT CONNECTION IN POOL AREA - (1 HDMI WALL PLATE AND 1 AXI DUAL XLR WALL PLATE) 2 CAT-6 CONNECTIONS BACK TO THE MAIN RACK
   NOTE: INSTALL EXTRA DEEP 2 GANG OUTDOOR RATED WALL BOX
3. - EQUIPMENT RACK SPACE FOR RACK PC, (LOCAL HDMI CONNECTION, XLR CONNECTION, 3.5MM CONNECTION AAP 301), APPLE TV CALL OUT
4. - 2 WIRELESS HAND-HELD MICS WITH REMOTE ANTENNA
5. - 4 OUTDOOR RATED SPEAKERS TO PROVIDE AUDIO COVERAGE - JBL AWC82 ALL-WEATHER SPEAKERS (POLE MOUNTED) PER PLANS (SEE LV5.03/6)

LIST OF EQUIPMENT AND PART TO BE INCLUDED BY THE INSTALLING CONTRACTOR AS PART OF THE EXRTRON SYSTEM.

- 60-1962-03 - DTP3 IN2004 DI/DO
- 0-1421-53 - DTP T HWP 4K 331 D - WHITE
- 60-1531-53 - DTP R HWP 4K 331 D- WHITE
- 60-1563-02 - TLP PRO 725M - BLACK
- 79-2577-01 - LINKLICENSE FOR TLP CTL PROCESSOR
- 60-1748-10 - TLCA 1
- 70-1137-02 - RM 5
- 60-1823-10 - DMP 64 PLUS C AT - AUDIO DSP
- 60-1947-01 - AXI 22 AT D PLUS
- 60-2034-01 - XPA U 4004 FX, 4-CH. POWER AMP
- 60-632-02 - AAP 301 BLACK
- 70-587-11 - AAP (1)3.5MM STEREO F-SLDR BLK
- 70-103-11 - AAP (1)3XLR F-SLDR NEUTRIK BLK
- 70-616-12 - AAP (1)HDMI F-F 10" PIGTAILS
- 60-1938-02 - USB POWERPLATE 311 AC AAP; BLACK
- 70-090-11 - AAP BLANK PLATE BLACK
- 60-604-02 - RSB 129 GRAY

CFCI - CONTRACTOR TO VERIFY WITH CITY AS CITY MAY OPT TO OBTAIN.
SHURE MICROPPHONES
PROVIDE (2) WIRELESS MICROPHONES MODEL QLX-D OR EQUAL FOR OUTDOOR USE
MIMUM (1) DESK MOUNT MODEL MS-58 OR EQUAL FOR RECEPTIONIST DESK
JBL AWC-82 WEATHER PROOF SPEAKERS WITH POLE MOUNTING HARDWARE

RACK ELEVATION - 12 RU NEEDED

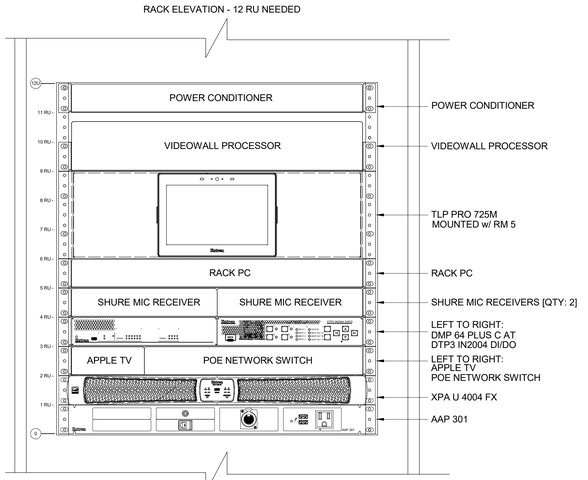

NOTES:
1. THIS IS A CONCEPTUAL BASED DRAWING AND IS NOT INTENDED FOR WIRING DIAGRAM USE.

AV RACK SPACE ELEVATION

SCALE:N.T.S

2 / LV5.04

AGENCY

FLEWELLING & MOODY
architecture planning interiors

HEADQUARTERS OFFICE:
99 S. Lake Avenue, Suite 300
Pasadena, CA 91101
Phone: 323.543.8300
E-Mail: fm-pasadena@flewelling-moody.com

ANTELOPE VALLEY OFFICE:
1035 West Lancaster Bouldvard
Lancaster, California 93534
Phone: 661.949.0771
E-Mail: fm-lancaster@flewelling-moody.com

An Employee Owned Corporation

ARCHITECT

CONSULTANT

Budlong
An MBE|SBE|DBE|LSBE Firm
Glendale|Downtown LA|Fremont|Camarillo
W W W . B U D L O N G . C O M
Job No. 23-140

REGISTERED PROFESSIONAL ENGINEER
JAMAA N. CHRISTIAN
No. E 22864
ELECTRICAL
STATE OF CALIFORNIA

Drawn by: Author

Check by: Checker

Revisions

No.	Date	Description
	01/26/24	100% DD
	03/01/24	50% CD
	05/09/24	90% CD
	08/05/24	100% CD
	11/25/24	100% CD V2
	01/31/25	100% CD V3
1	6/9/25	BID ALTERNATE

All dimensions must be checked at the job by the contractor who accepts full responsibility for their accuracy under the contract. These plans & the specifications in connection therewith have been prepared for a specific site. Any and all responsibility for their use in whole or in part on any other site is hereby disclaimed by Flewelling & Moody.

CITY OF RIDGECREST

SGT. JOHN PINNEY MEMORIAL POOL REPLACEMENT

205 S WARNER ST, RIDGECREST, CA 93555

Drawing Title

LOW VOLTAGE DETAILS

Job No. 3055-0000

Sheet No. **LV5.04**

Date 08/07/2024

■ POLE SCHEDULE

No.	STANDARD TYPE	STANDARD SIG. M.A.	STANDARD LUM. M.A.	LUM LED* (LUMENS)	VEHICLE SIGNAL MOUNTING MAST ARM	VEHICLE SIGNAL MOUNTING POLE	PED SIGNAL MTG.	APS PPB ø	APS PPB QUAD	APS PPB ARROW	R.S.N.S. (POLE MOUNT)	POLE LOCATION (SEE POLE LOC DETAIL) E	B	C
Ⓐ	**19-4-100	25'	●15'	6500	MAS-3A, MAS-3A	SV-1-T	SP-1-T	–	S	LT	Ped Xing	SEE PLAN		7.0'
Ⓑ	15-FBS	–	–	–	–	SV-1-T	SP-1-T	–	N	LT	–	SEE PLAN		4.0'

■ ALL EQUIPMENT IS NEW , SEE CALTRANS STND PLANS ES-7A – ES-7N, SEE SHEET TS.03.

● MAST ARM MOUNTING LOCATION SHALL BE 18" FROM TOP OF STANDARD, PER DETAIL HEREON.

* LED LUMINARE SHALL BE TYPE 4, 3000K TEMPERATURE, AUTO DIMMING PROFILE SHALL BE SET TO THE HOURS SPECIFIED BY THE CITY ENGINEER.

** FABRICATE POLE TOP WITH VERTICAL TENON FOR SOLAR LUMINAIRE ENGINE, PER DETAIL HEREON.

DEMAND SEQUENCE

AT REST		PED ACTUATION (STAGE 1)		PED ACTUATION (STAGE 2)		PED CROSSING		CLEARANCE	
ø2 ø2	ø4P	ø2 ø2	ø4P	ø2 ø2	ø4P	ø2 ø2	ø4P	ø2 ø2	ø4P
ALL DARK	DON'T WALK	FLASHING YELLOW	DON'T WALK	STEADY YELLOW	DON'T WALK	STEADY RED	WALK	FLASHING RED	FLASH DON'T WALK

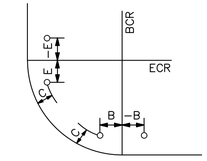

POLE LOCATION DETAIL

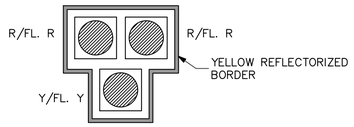

PEDESTRIAN HYBRID BEACON
N.T.S.

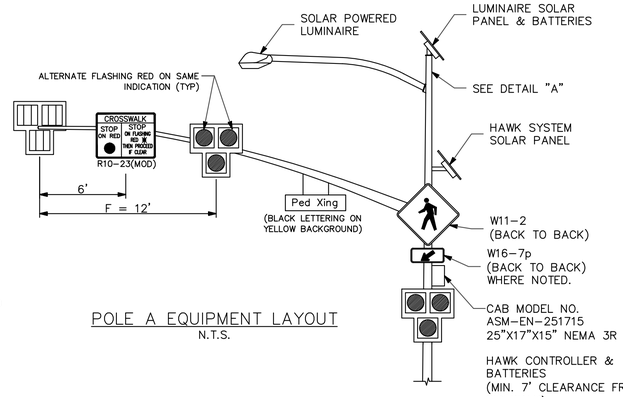

POLE A EQUIPMENT LAYOUT
N.T.S.

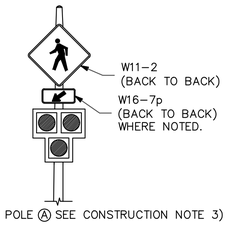

(HARD-WIRED TO POLE Ⓐ SEE CONSTRUCTION NOTE 3)

POLE B EQUIPMENT LAYOUT
N.T.S.

SGT. JOHN PINNEY POOL

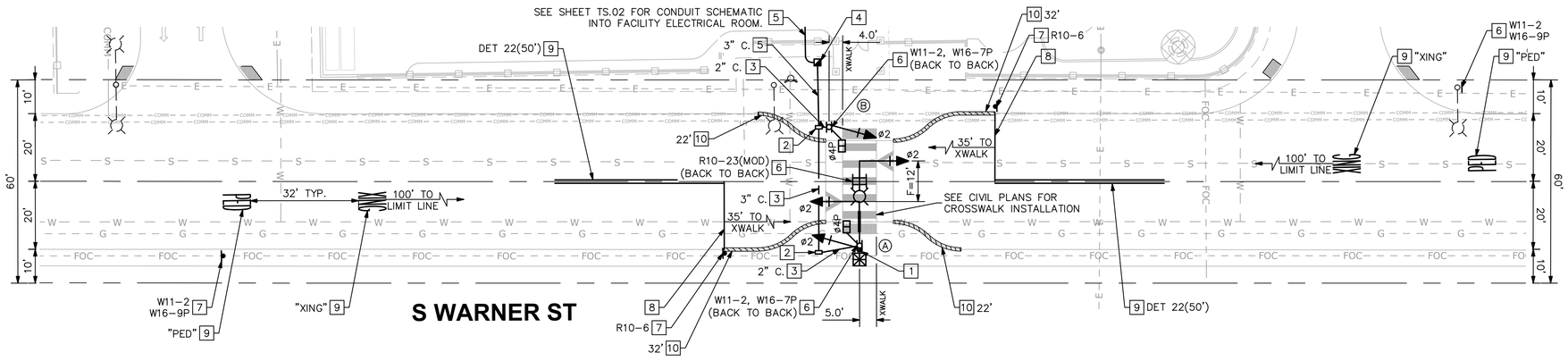

PEDESTRIAN HYBRID SIGNAL GENERAL NOTES:

1. TRAFFIC SIGNAL POLES FOR PEDESTRIAN HYBRID SIGNAL (HAWK) SYSTEM, HIGHWAY LIGHTING EQUIPMENT, SIGNING AND STRIPING, AND THE INSTALLATION THEREOF SHALL CONFORM TO THE 2023 CALTRANS STANDARD PLANS AND SPECIFICATIONS THE 2014 CALIFORNIA MANUAL ON UNIFORM TRAFFIC CONTROL DEVICES (CA MUTCD), LATEST EDITION, THIS PLAN AND THE SPECIAL PROVISIONS.
2. ALL MATERIALS AND EQUIPMENT SHALL BE FURNISHED AND INSTALLED BY THE CONTRACTOR.
3. OBTAIN APPROVAL FOR EXACT SIGNAL EQUIPMENT LOCATIONS WITH THE ENGINEER IN THE FIELD PRIOR TO THE FINAL PLACEMENT.
4. PRELIMINARY CROSSWALK LAYOUT SHALL BE PERFORMED PRIOR TO FINAL PLACEMENT OF TRAFFIC SIGNAL POLES, PER THE ENGINEER IN THE FIELD. POLES SHALL BE LOCATED NO MORE THAN 5' FROM BACK OF THE CROSSWALK.
5. VEHICLE INDICATIONS SHALL BE 12" LIGHT EMITTING DIODE (LED) RED, AND LED YELLOW PER THE SPECIAL PROVISIONS.
6. CONDUIT SHALL BE MIN. 2" IN SIZE AND SCH 80 PVC, UNLESS SHOWN OTHERWISE.
7. PULL BOXES SHALL BE #5 "CHRISTY" OR APPROVED EQUAL WITH FIBERLYTE LIDS, UNLESS OTHERWISE NOTED.
8. PEDESTRIAN INDICATIONS SHALL BE LED COUNTDOWN PEDESTRIAN HEADS PER THE SPECIAL PROVISIONS.
9. ALL PEDESTRIAN PUSH BUTTONS AND SIGNS SHALL BE ACCESIBLE PEDESTRIAN SIGNAL(APS) AND R10-3b PEDESTRIAN PUSH BUTTON SIGN. PUSH BUTTONS SHALL BE POLARA INS OR CITY APPROVED EQUAL.
10. LOCATION OF UNDERGROUND FACILITIES ARE APPROXIMATE. THE CONTRACTOR SHALL POTHOLE TO DETERMINE THE EXACT LOCATION AND VERIFY ALL CONDITIONS ON THE JOBSITE PRIOR TO ORDERING POLES.
11. THE CONTRACTOR SHALL EXERCISE EXTREME CARE TO AVOID DAMAGING EXISTING UTILITIES BY LOCATING ALL UTILITIES PRIOR TO CONSTRUCTION. HAND DIG FOUNDATIONS UNTIL CLEAR OF OBSTRUCTION. COORDINATE POLE INSTALLATION WITH OVERHEAD UTILITY AND SUBSTRUCTURE OWNERS. CONTACT UNDERGROUND SERVICE ALERT AT (422) 642–2444, 48 HOURS PRIOR TO CONSTRUCTION.
12. ANY MODIFICATION OF OR CHANGES TO APPROVED PLANS MUST BE APPROVED BY THE CITY ENGINEER.
13. CONDUIT ROUTINGS SHOWN ARE SCHEMATIC ONLY. ACTUAL ROUTINGS SHALL BE BY THE MOST DIRECT PATH POSSIBLE THAT DOES NOT PRODUCT THE CONFLICTED IDENTIFIED HEREIN.
14. THE CONTRACTOR SHALL MAINTAIN PROPER ADA CLEARANCES AROUND ALL NEW POLES, CABINETS, OR ANY OTHER ABOVE-GROUND EQUIPMENT TO BE INSTALLED AS PART OF THIS PROJECT. ALL NEW POLES, CONDUIT, AND PULL BOXES SHALL BE INSTALLED OUTSIDE OF CURB RAMPS.
15. ALL STRIPING DETAILS, PAVEMENT MARKINGS AND CROSSWALKS SHALL BE THERMOPLASTIC. RED CURB SHALL BE PAINT, 2 COATS.
16. REMOVAL OF CONFLICTING STRIPING SHALL BE BY GRINDING METHOD. STRIPING REMOVALS SHALL INCLUDE REMOVAL OF RAISED PAVEMENT MARKERS.

CONSTRUCTION NOTES (THIS SHEET ONLY):

1. INSTALL SOLAR POWERED LANE LIGHT HAWK PEDESTRIAN CROSSING SYSTEM CONTROLLER ASSEMBLY COMPLETE ON SIGNAL STANDARD AS SHOWN AND AUXILIARY EQUIPMENT AS NECESSARY TO PROVIDE THE OPERATION SHOWN. WIRING AND CALIBRATION PER MANUFACTURERS INSTRUCTIONS, SEE SPECIAL PROVISIONS. SYSTEM CONTROLLER CABINET SHALL BE PRE-INSTALLED WITH A/C POWER CAPABILITY, & SPARE 1–30AMP BREAKER(LUM) FOR FUTURE USE.
2. INSTALL #5 PULLBOX, FIBERLYTE LIDS SHALL BE LABELED "TRAFFIC SIGNAL".
3. INSTALL SCHEDULE 80 PVC CONDUIT SIZE AS NOTED, WITH 1/4" POLY PULL ROPE & CONDUCTORS REQUIRED PER MANUFACTURERS INSTRUCTIONS FOR INTENDED OPERATION AS SHOWN.
4. INSTALL 120/240V 1P TYPE III-BF ELECTRICAL SERVICE ENCLOSURE WITH 100AMP MAIN BREAKER. FURNISH 1–50AMP BREAKER FOR METERED SIGNAL, 1–30AMP BREAKER FOR METERED SAFETY LIGHTING FOR FUTURE USE AND INSTALL IN ENCLOSURE.
5. INSTALL SCHEDULE 80 PVC CONDUIT SIZE AS NOTED WITH 1/4" POLY PULL ROPE FOR FUTURE USE. APPLY DUCT SEAL TO CONDUIT ENDS.
6. INSTALL SIGN(S) AS NOTED.
7. INSTALL SIGN(S) AND POST AS NOTED.
8. INSTALL 12" THERMOPLASTIC WHITE LIMIT LINE.
9. INSTALL STRIPING DETAIL AND/OR PAVEMENT MARKING AS SHOWN.
10. INSTALL RED CURB MARKING LENGTH AS NOTED, 2 COATS.

LEGEND:

▨ – PROPOSED RED CURB

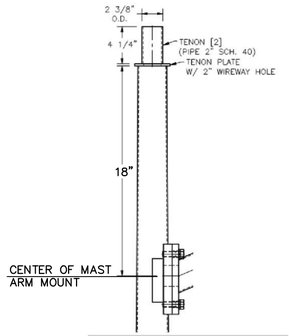

POLE A TOP DETAIL
LUMINAIRE SOLAR ENGINE VERTICAL TENON MOUNT
N.T.S.

SCALE: 1" = 20'

811 Know what's below. Call before you dig.

REFERENCES NO.	DESCRIPTION	APP.	DATE

REGISTERED PROFESSIONAL ENGINEER MIGUEL A. OBREGON ARREOLA NO. 96819 CIVIL STATE OF CALIFORNIA

APPROVED BY: CITY OF RIDGECREST

TRAVIS REED, P.E. R.C.E. 93828 DATE
PUBLIC WORKS DIRECTOR

PREPARED UNDER THE SUPERVISION OF:

3/27/2025
MIGUEL A. OBREGON ARREOLA, P.E. R.C.E. 96819 DATE

PLANS PREPARED BY:

WILLDAN
374 POLI STREET, SUITE 101
VENTURA, CALIFORNIA 93001
(805) 653-6597

CITY OF RIDGECREST
PUBLIC WORKS DEPARTMENT
100 W. CALIFORNIA AVENUE
RIDGECREST, CA. 93555
(760) 499-5000

CITY OF RIDGECREST	DATE: 3/27/2025
SGT. JOHN PINNEY MEMORIAL POOL REPLACEMENT PROJECT	SCALE: AS-NOTED
	PROJECT NO.
PEDESTRIAN HYBRID SIGNAL (HAWK) PLAN	DRAWN BY:
	CHECKED BY:
SGT. JOHN PINNEY MEMORIAL POOL	SHEET: TS.01

W:\WE-CA\RIDGECREST, CITY OF\113094 - RIDGECREST PINNEY POOL\900-PS&E\901-PLANS\PL-HAWK-01-PINNEY POOL.DWG 12/20/2024 10:11:03 AM

100% SUBMITTAL - NOT FOR CONSTRUCTION

ELECTRICAL GENERAL NOTES:

1. ELECTRICAL CONDUIT, PULLBOXES, AND THE INSTALLATION THEREOF SHALL CONFORM TO THE APPLICABLE 2022 CALIFORNIA ELECTRICAL CODE.
2. CONDUIT ROUTINGS SHOWN ARE SCHEMATIC ONLY. ACTUAL ROUTINGS SHALL BE BY THE MOST DIRECT PATH POSSIBLE THAT DOES NOT PRODUCT THE CONFLICTED IDENTIFIED HEREIN.
3. CONDUIT RACEWAYS INSIDE OF BUILDING SHALL BE CONCEALED.
4. OUTDOOR RACEWAYS SHALL BE SCH 80 PVC. INDOOR RACEWAYS SHALL BE RIGID GALVANIZED STEEL CONDUIT.
5. SEE ELECTRICAL PLANS FOR ADDITIONAL REQUIREMENTS & REFRENCES.

CONSTRUCTION NOTES (THIS SHEET ONLY):

[1] INSTALL 2" CONDUIT UNLESS OTHERWISE NOTED WITH 1/4" POLY PULL ROPE FOR FUTURE USE. APPLY DUCT SEAL TO CONDUIT ENDS.

[2] INSTALL #5 PULLBOX, FIBERLYTE LIDS SHALL BE LABELED "SIGNAL".

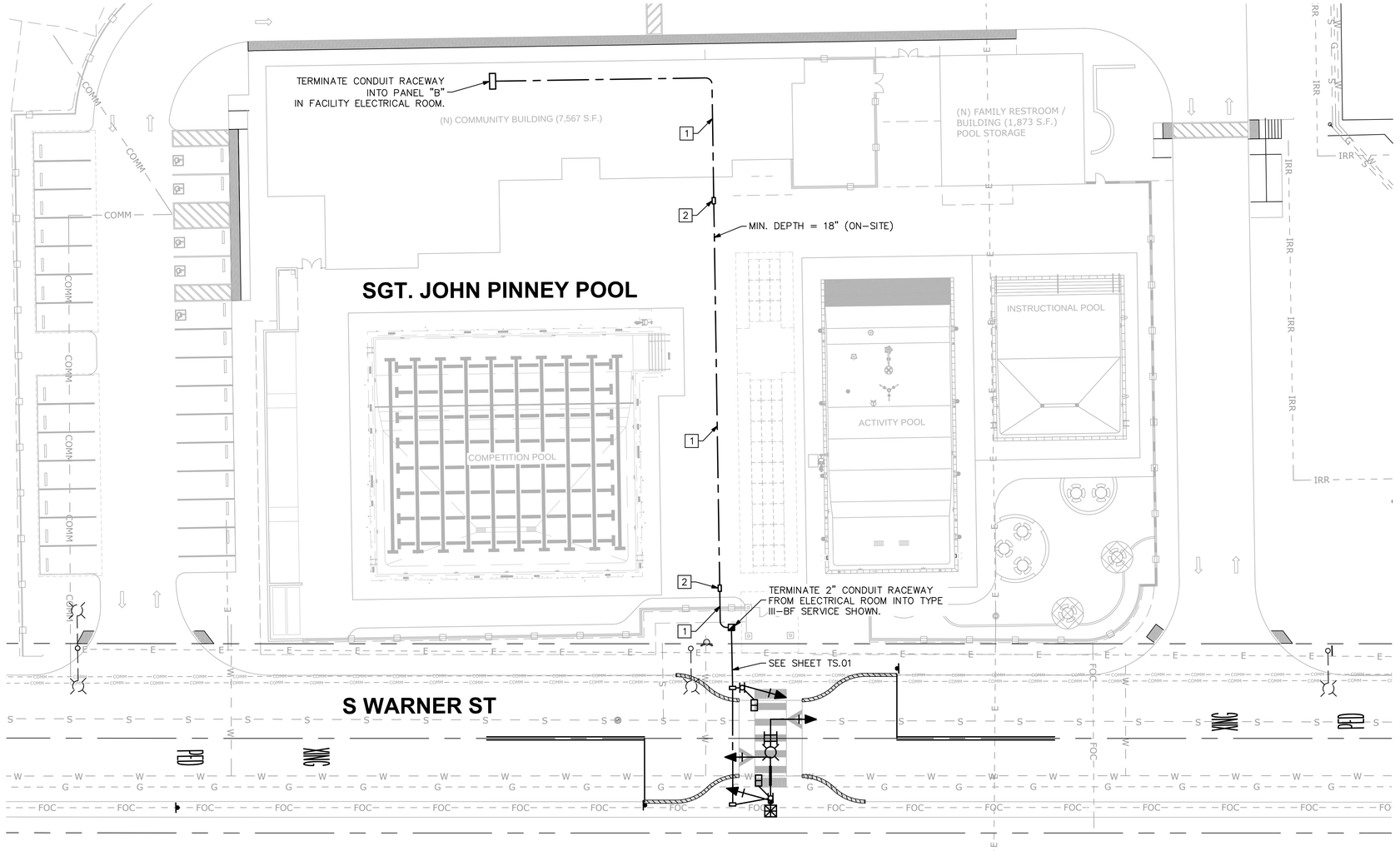

SCALE: 1" = 20'

100% SUBMITTAL - NOT FOR CONSTRUCTION

W:\WE-CA\RIDGECREST, CITY OF\113094 - RIDGECREST PINNEY POOL\300-PS&E\301-PLANS\PL-HAWK-01-PINNEY POOL.DWG 12/20/2024 10:11:03 AM

Know what's below. Call before you dig. 811

REFERENCES

NO.	DESCRIPTION	APP.	DATE

REGISTERED PROFESSIONAL ENGINEER — MIGUEL A. OBREGON ARREOLA — NO. 96819 — CIVIL — STATE OF CALIFORNIA

APPROVED BY: CITY OF RIDGECREST

TRAVIS REED, P.E. R.C.E. 93828 DATE
PUBLIC WORKS DIRECTOR

PREPARED UNDER THE SUPERVISION OF:

3/27/2025
MIGUEL A. OBREGON ARREOLA, P.E. R.C.E. 96819 DATE

PLANS PREPARED BY:

WILLDAN
374 POLI STREET, SUITE 101
VENTURA, CALIFORNIA 93001
(805) 653-6597

CITY OF RIDGECREST
PUBLIC WORKS DEPARTMENT
100 W. CALIFORNIA AVENUE
RIDGECREST, CA. 93555
(760) 499-5000

CITY OF RIDGECREST

SGT. JOHN PINNEY MEMORIAL POOL
REPLACEMENT PROJECT

PEDESTRIAN HYBRID SIGNAL (HAWK) PLAN

SGT. JOHN PINNEY MEMORIAL POOL

DATE: 3/27/2025
SCALE: AS-NOTED
PROJECT NO.
DRAWN BY:
CHECKED BY:
SHEET: TS.02

GENERAL NOTES:

1. THE CALTRANS STANDARD PLANS SHOWN ON THIS SHEET ARE SHOWN FOR REFERENCE ONLY. STANDARD PLANS SHOWN MIGHT NOT FULLY ENCOMPASS ALL STANDARD PLANS REQUIRED FOR TRAFFIC SIGNAL STANDARD FABRICATION. REFRENCED PLANS HEREIN ARE PROPERTY OF THE STATE OF CALIFORNIA.

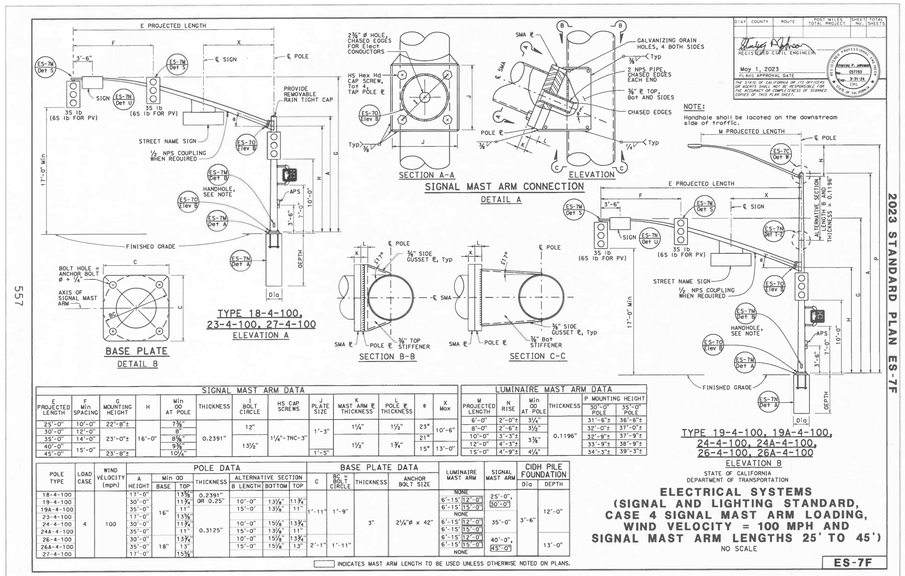

SIGNAL MAST ARM DATA

E PROJECTED LENGTH	A MIN SPACING	MOUNTING HEIGHT	H	MIN OD AT POLE	THICKNESS	BOLT CIRCLE	HS CAP SCREWS	A MAST ARM E THICKNESS	A POLE E THICKNESS	θ	X Min
25'-0"	10'-0"	22'-8"±	16'-0"	7/8	0.2391"	12"	1¼"-7NC-3"	1¼"	1½"	23°	10'-6"
30'-0"	12'-0"	23'-0"±		8"						21°	
35'-0"	14'-0"			8⅝"		13½"		1½"	1¾"	15°	13'-0"
40'-0"	15'-0"			9⅜							
45'-0"	17'-0"	23'-8"±		10¼"				1'-5"			

LUMINAIRE MASS ARM DATA

M PROJECTED LENGTH	N RISE	MIN OD AT POLE	THICKNESS	P MOUNTING HEIGHT 30'-0"	P MOUNTING HEIGHT 35'-0"
6'-0"	2'-0"±	3½"	0.1196"	35'-4"±	36'-4"±
8'-0"	2'-6"±	3½"		32'-0"±	33'-0"±
10'-0"	3'-0"±	3⅝"		32'-9"±	33'-9"±
12'-0"	4'-3"±	4"		33'-9"±	34'-9"±
15'-0"	4'-9"±	4¼"		34'-3"±	35'-3"±

POLE DATA

POLE TYPE	LOAD CASE	WIND VELOCITY (mph)	A HEIGHT	Min OD BASE	Min OD TOP	THICKNESS
18-4-100	4	100	17'-0"	13⅝"	11⅜"	0.2391" OR 0.25"
19-4-100			30'-0"	13⅞"	11⅝"	
19A-4-100			35'-0"	14"	11¾"	
23-4-100			17'-0"	16"	13⅜"	
24-4-100			30'-0"	14"	11⅞"	0.3125"
24A-4-100			35'-0"		12"	
26-4-100			30'-0"	13⅞"	11⅝"	
26A-4-100			35'-0"	18"	13"	
27-4-100			17'-0"		15⅜"	

BASE PLATE DATA

C	BC ⌀ BOLT CIRCLE	THICKNESS	ANCHOR BOLT SIZE
1'-11"	1'-9"	3"	2¼"Φ x 42"

ALTERNATIVE SECTION

B LENGTH	BOTTOM	TOP
10'-0"	15⅛"	13⅞"
15'-0"	13⅜"	11"
10'-0"	15⅛"	13⅞"
15'-0"	15⅛"	13"
10'-0"	15⅛"	13⅜"
15'-0"	15⅛"	13"

LUMINAIRE MAST ARM

NONE	
6'-15" D=0"	
6'-15" D=0"	
NONE	
6'-15" D=0"	
6'-15" D=0"	
NONE	

SIGNAL MAST ARM

25'-0"	
30'-0"	
35'-0"	
40'-0"	
45'-0"	

CIDH PILE FOUNDATION

Dia	DEPTH
3'-6"	12'-0"
	13'-0"

INDICATES MAST ARM LENGTH TO BE USED UNLESS OTHERWISE NOTED ON PLANS.

DIST | COUNTY | ROUTE | POST MILES TOTAL PROJECT | SHEET NO. | TOTAL SHEETS NO. SHEETS
Charles R. Johnson
REGISTERED CIVIL ENGINEER
May 1, 2023
PLANS APPROVAL DATE
THE STATE OF CALIFORNIA OR ITS OFFICERS OR AGENTS SHALL NOT BE RESPONSIBLE FOR THE ACCURACY OF COMPLETENESS OF SCANNED COPIES OF THIS PLAN SHEET.

Return to Table of Contents

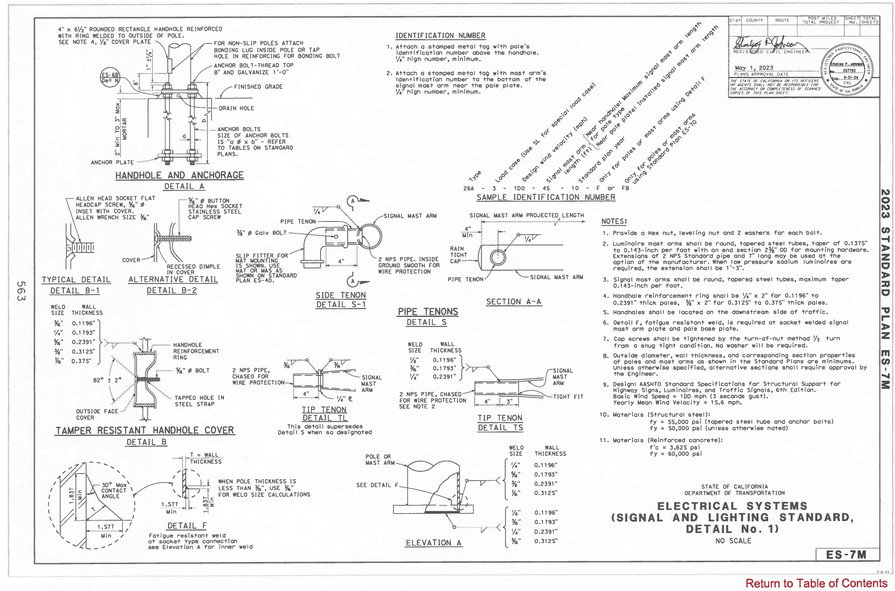

Return to Table of Contents

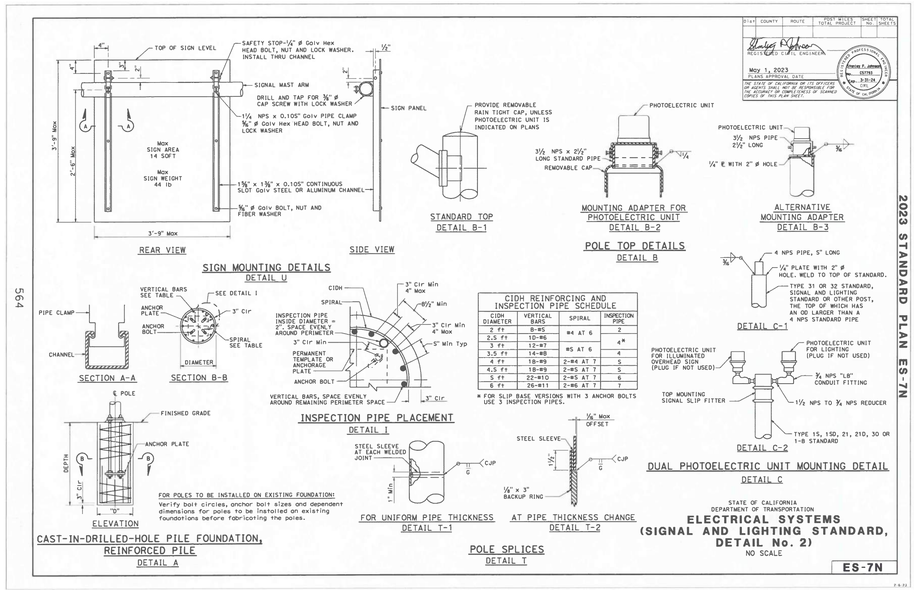

Return to Table of Contents

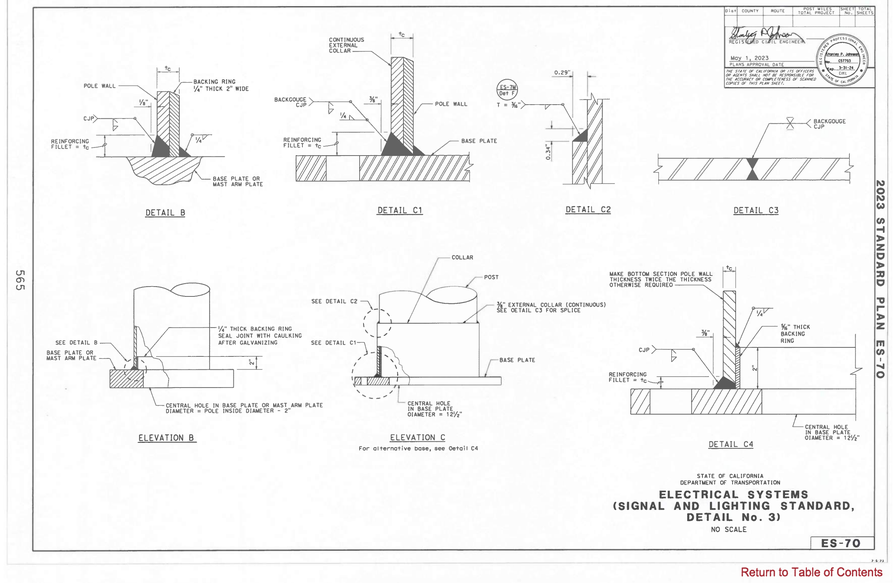

Return to Table of Contents

100% SUBMITTAL - NOT FOR CONSTRUCTION

W:\WE-CA\RIDGECREST, CITY OF\113094 - RIDGECREST PINNEY POOL\900-PS&E\901-PLANS\PL-HAWK-01-PINNEY POOL.DWG 12/20/2024 10:11:03 AM

811 Know what's below. Call before you dig.

REFERENCES

NO.	DESCRIPTION	APP.	DATE

REGISTERED PROFESSIONAL ENGINEER MIGUEL A. OBREGON ARREOLA NO. 96819 CIVIL STATE OF CALIFORNIA

APPROVED BY: CITY OF RIDGECREST

TRAVIS REED, P.E. R.C.E. 93828 DATE
PUBLIC WORKS DIRECTOR

PREPARED UNDER THE SUPERVISION OF:

3/27/2025
MIGUEL A. OBREGON ARREOLA, P.E. R.C.E. 96819 DATE

PLANS PREPARED BY:

WILLDAN
374 POLI STREET, SUITE 101
VENTURA, CALIFORNIA 93001
(805) 653-6597

CITY OF RIDGECREST
PUBLIC WORKS DEPARTMENT
100 W. CALIFORNIA AVENUE
RIDGECREST, CA. 93555
(760) 499-5000

CITY OF RIDGECREST

SGT. JOHN PINNEY MEMORIAL POOL REPLACEMENT PROJECT

2023 APPLICABLE CALTRANS STANDARD PLANS

SGT. JOHN PINNEY MEMORIAL POOL

DATE: 3/27/2025
SCALE: AS-NOTED
PROJECT NO.
DRAWN BY:
CHECKED BY:
SHEET: TS.03